Parts Catalog

Mazda MX-5 MIATA U.S.A. ('94)

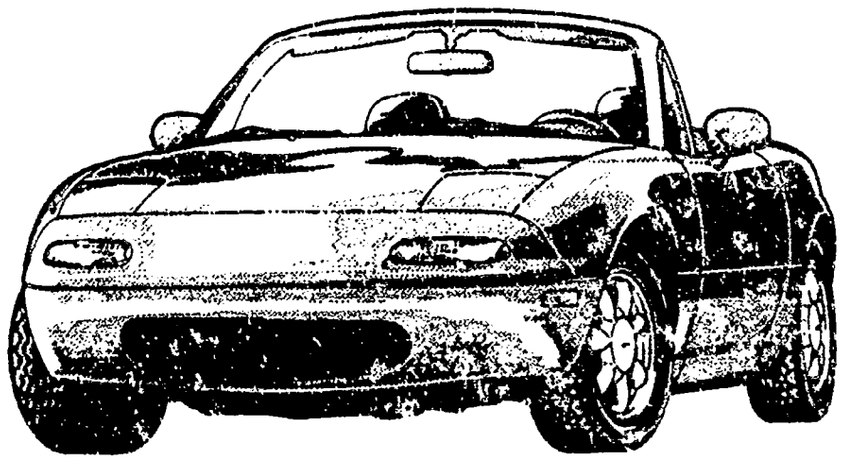

NA3•••-500001~600000

Apr.'95 (FINAL)

Catalog No. AU-NA04-03

mazda

© 1995 Mazda Motor Corporation

LAYOUT OF CONTENTS / DISPOSITION TYPOGRAPHIQUE DE CONTENU / DISPOSICION DEL CONTENIDO / ANORDNUNG DES INHALTS

- The following is a typical example of the layout of contents on Mazda microfiche parts catalog
- Voici un exemple typique de la disposition typographique de contenu dans les microfiches de catalogue des pièces de Mazda
- El siguiente es un ejemplo típico de la disposición del contenido en una microficha del catálogo de repuestos de Mazda.
- Folgendes ist ein typisches Beispiel der Inhaltsanordnung des Mazda-Mikrofiche-Teilekatalogs.

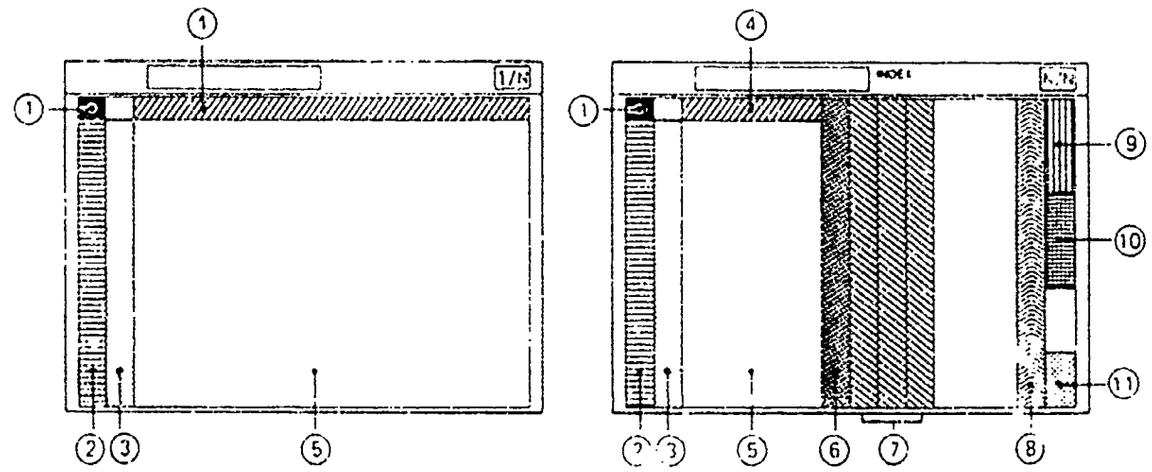

Remark : The items listed under ④ have been deleted from each fiche since Dec. '93

① • Layout of contents
• Disposition Typographique de Contenu
• Disposición del contenido
• Anordnung des Inhalts

② • Pictorial Index
• Index par Schémas
• Indice Gráfico
Illustrierter Index

③ • Master Section No. Index
• Index des Numéros des Sections Totale
• Indice del Número de la Sección Maestra
• Hauptabschnitssnummer-Index

~~④ • Section No. Index for the Column~~
~~• Index des Numéros des Sections pour les Colonnes~~
~~• N° de la Sección para el Indice~~
~~• Abschnitssnummer-Index für die Spalte~~

⑤ • Illustration & Text
• Illustrations et Textes
• Ilustración y Texto
• Abbildung und Text

⑥ • Part No. Index
• Index des Numéros des Pièces
• Indice del N° de Pieza
• Teile-Nr.-Index

⑦ • Alphabetical Index
• Index Alphabétique
• Indice Alfabético
• Alphabetischer Index

⑧ • Model Identification
• Identification des Modèles
• Identificación del Modelo
• Modell-Kennzeichnung

⑨ • Vehicle Identification System
• Système d'Identification de Véhicule
• Sistema de Identification de Vehículo
• Fahrzeug-Identifikations system

PICTORIAL INDEX

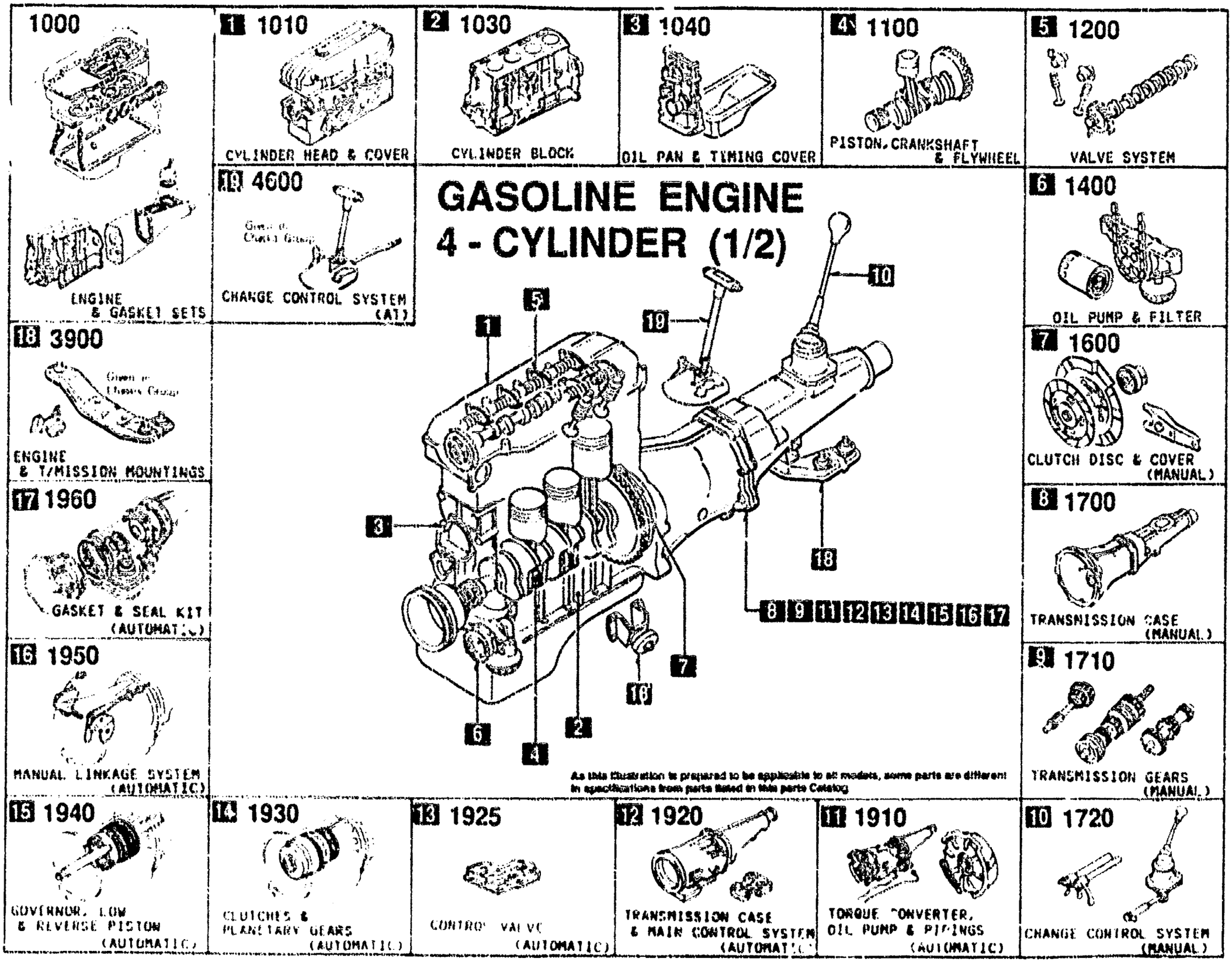

PICTORIAL INDEX

GASOLINE ENGINE
4 - CYLINDER (2/2)

1 1300

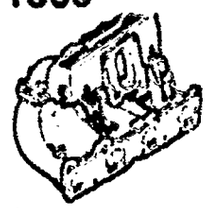

INLET MANIFOLD

2 1310

EXHAUST MANIFOLD

3 1320

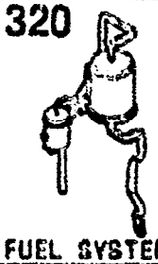

FUEL SYSTEM

4 1325

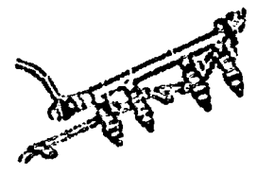

FUEL DISTRIBUTOR

5 1330

AIR CLEANER

6 1364

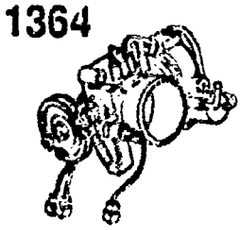

THROTTLE BODY

7 1370

EMISSION CONTROL SYSTEM (INLET SIDE)

8 1500

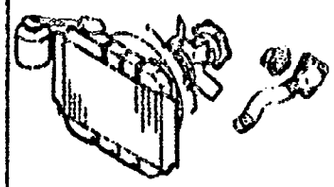

COOLING SYSTEM

9 1580

BRACKET, PULLEY & BELT

10 1800

ENGINE ELECTRICAL SYSTEM

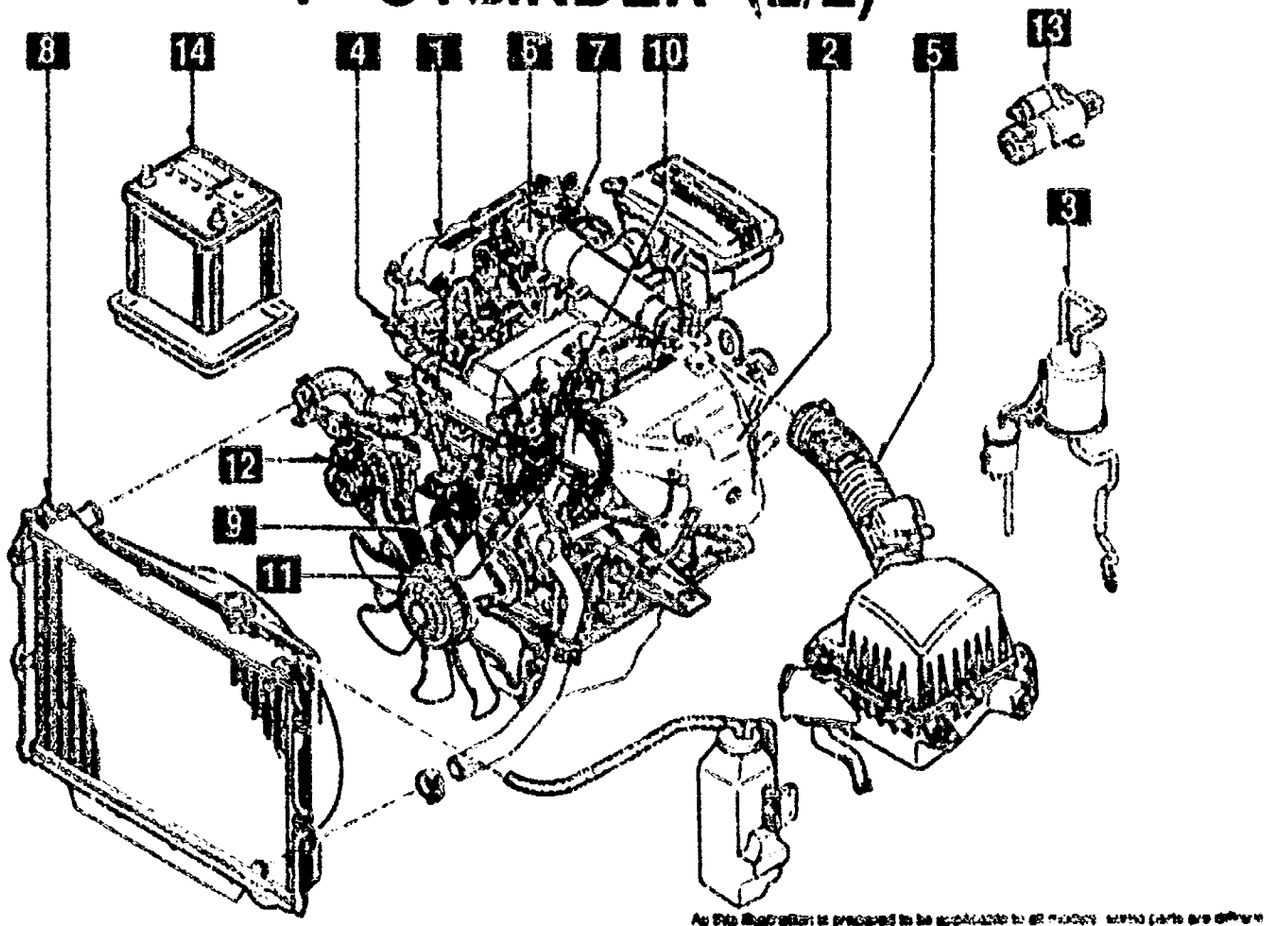

As this illustration is prepared to be applicable to all models, some parts are different in specifications from the parts listed in the parts Catalog.

14 1850

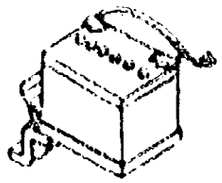

BATTERY

13 1840

STARTER

12 1830

ALTERNATOR

11 1820

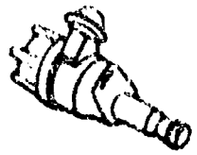

DISTRIBUTOR

PICTORIAL INDEX

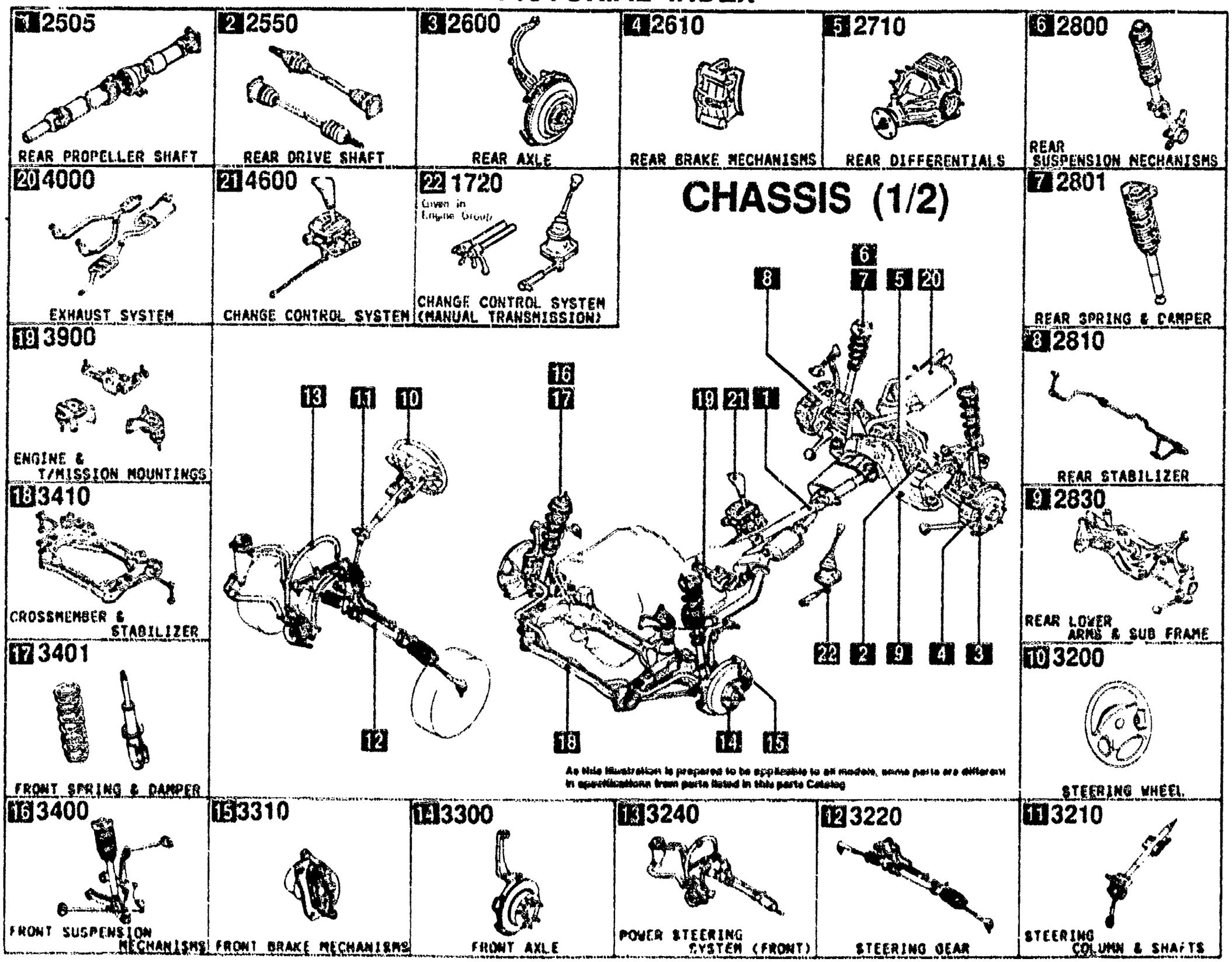

PICTORIAL INDEX

1 3700

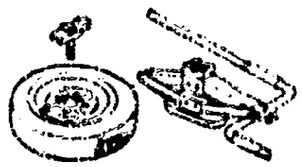

TIRES & JACK

2 4140

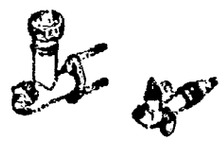

CLUTCH RELEASE & MASTER CYLINDERS

3 4145

CLUTCH PIPINGS

4 4160

ACCELERATOR CONTROL SYSTEM

5 4200

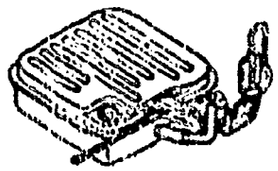

FUEL TANK

6 4210

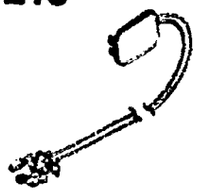

FUEL LID OPENER

CHASSIS (2/2)

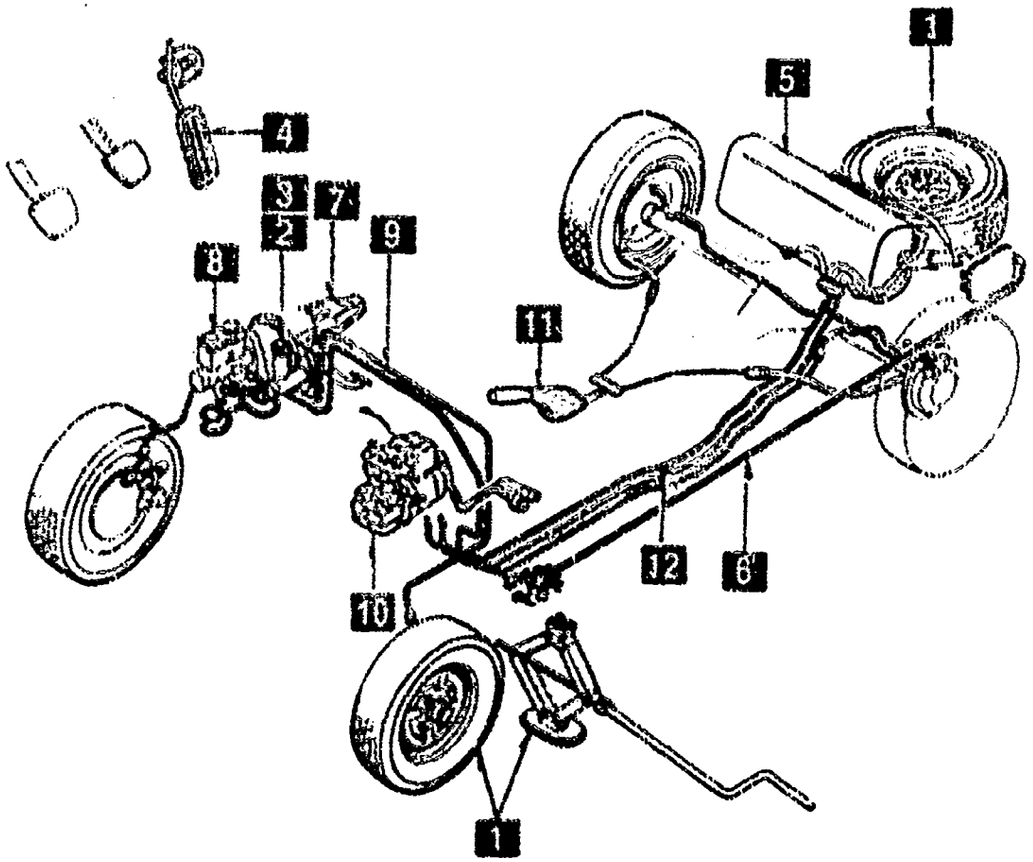

As this illustration is prepared to be applicable to all models, some parts are different in specifications from parts listed in this parts Catalog.

7 4300

CLUTCH & BRAKE PEDALS

8 4340

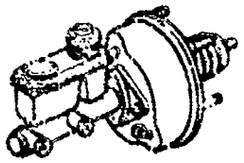

BRAKE MASTER CYLINDER & POWER BRAKE

9 4360

BRAKE PIPINGS

10 4370

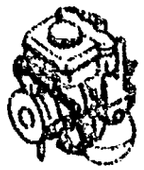

ANTILOCK BRAKE SYSTEM

11 4400

PARKING BRAKE SYSTEM

12 4500

FUEL PIPINGS

PICTORIAL INDEX

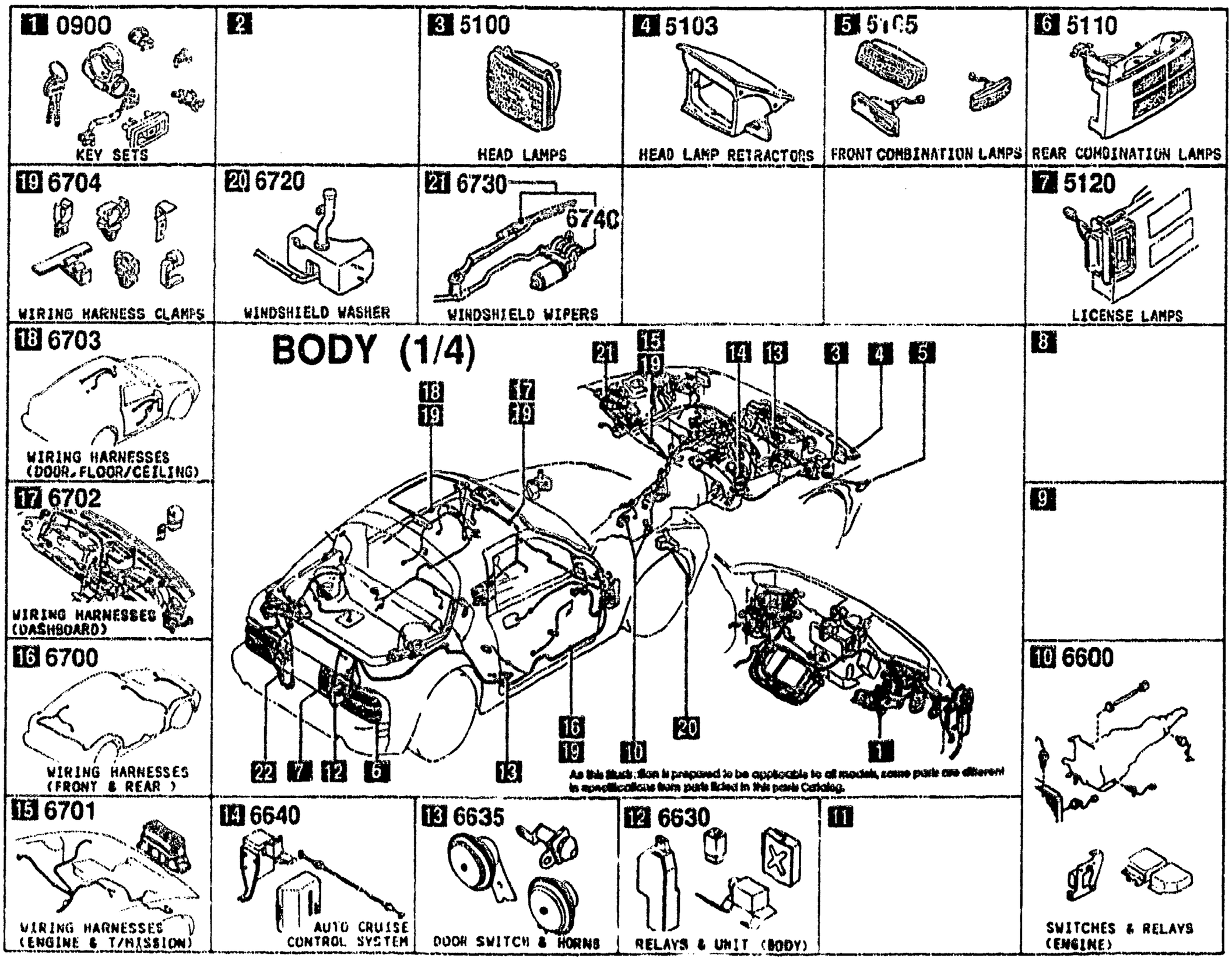

As this illustration is proposed to be applicable to all models, some parts are different in specifications from parts listed in this parts Catalog.

PICTORIAL INDEX

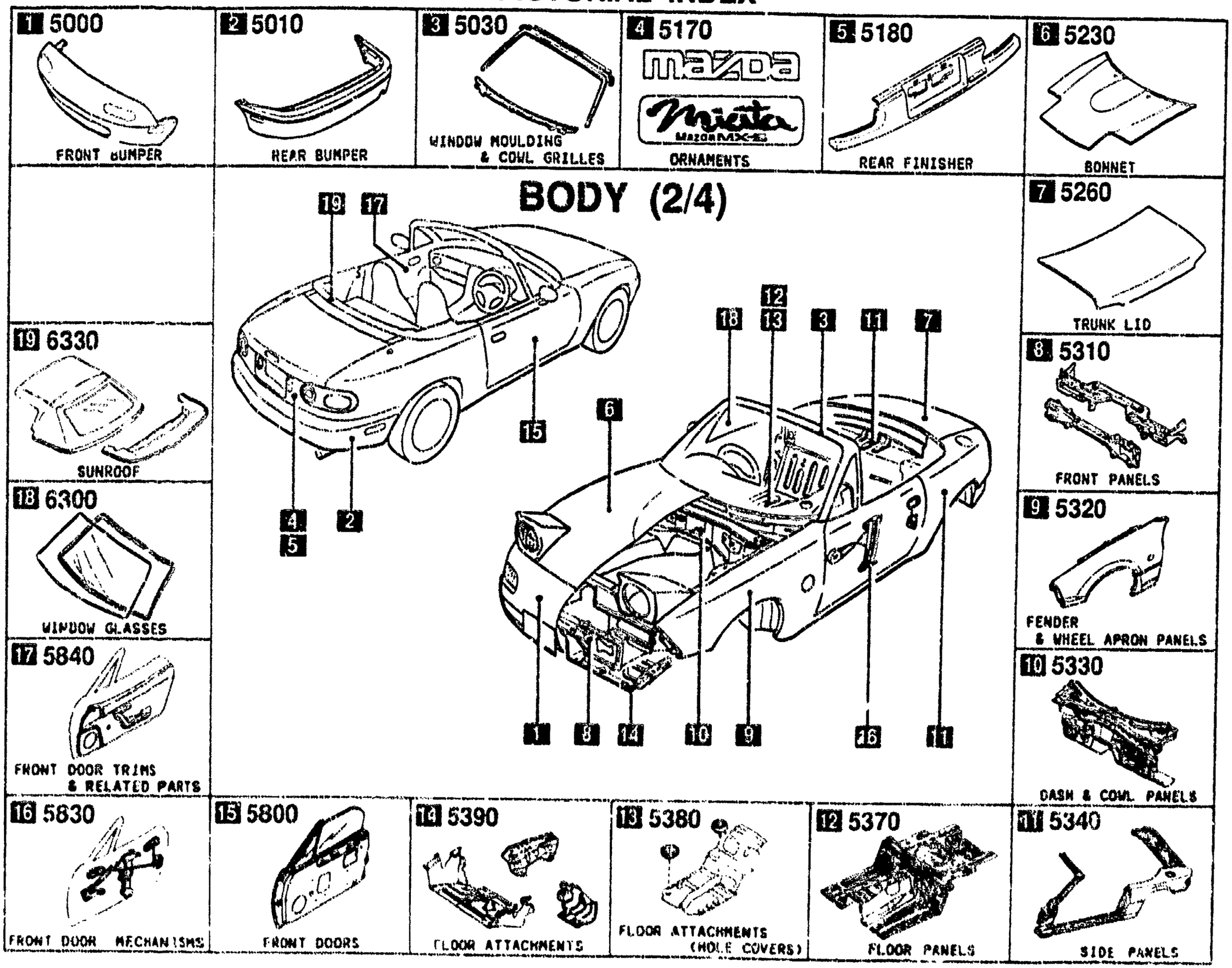

PICTORIAL INDEX

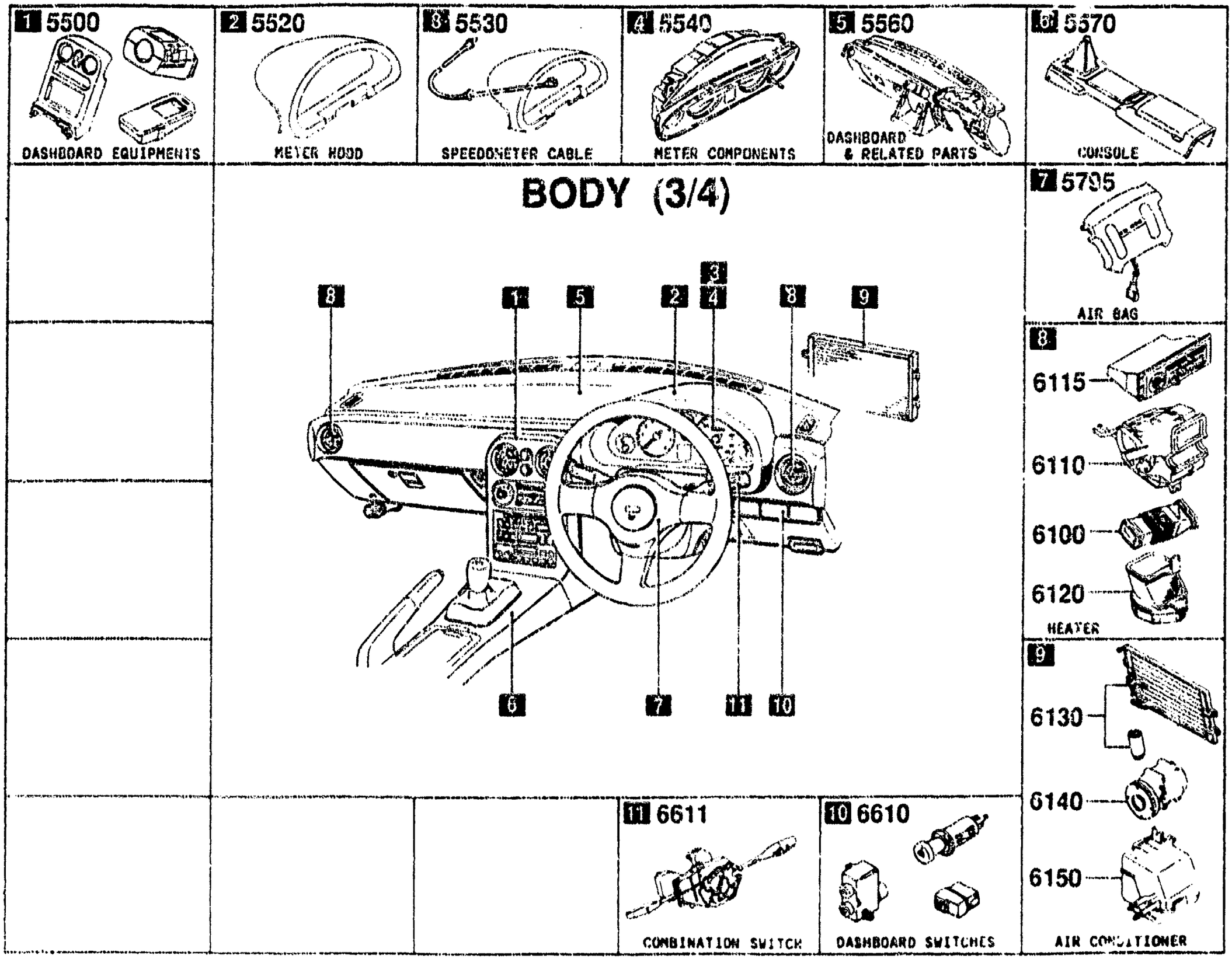

PICTORIAL INDEX

1 5580

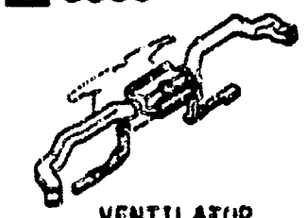

VENTILATOR

2 5700

SEATS

3 5790

SEAT BELTS

4 6680

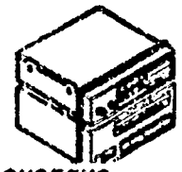

AUDIO SYSTEMS (RADIO & TAPE DECK)

5 6682

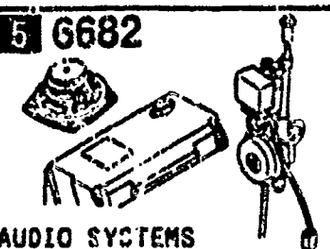

AUDIO SYSTEMS (ANTENNA & SPEAKER)

6 6820

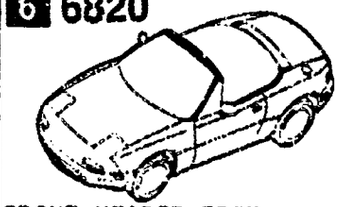

FRONT HEADER TRIM & PILLAR TRIMS

BODY (4/4)

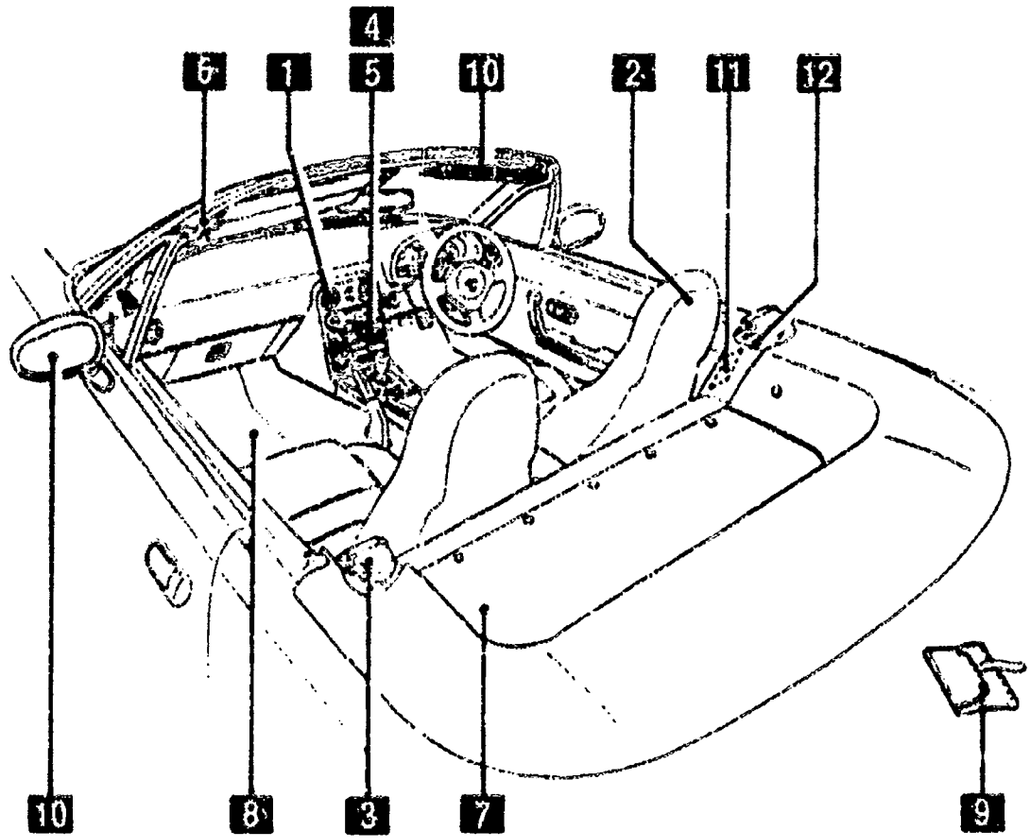

As this illustration is prepared to be applicable to all models, some parts are different in specifications from parts listed in this parts Catalog.

7 6840

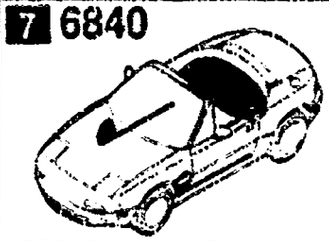

TRIMS & SCUFF PLATES

8 6860

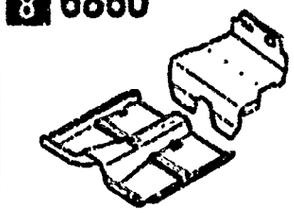

FLOOR MATS & PADS

9 6870

SERVICE TOOLS

10 6900

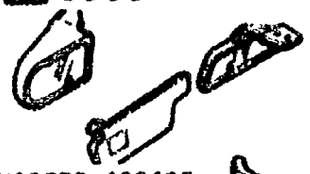

VISORS, ASSIST HANDLES & MIRRORS

12 7250

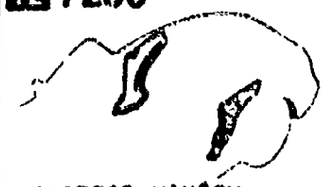

QUARTER WINDOW & TRIMS

11 6930

CAUTION PLATES & LABELS

SECTION NAME INDEX (ENGINE)

LO.NO	SEC.NO	SECTION NAME	LO.NO	SEC.NO	SECTION NAME	LO.NO	SEC.NO	SECTION NAME
1-C03	1000	ENGINE & GASKET SETS	1-M09	1960	GASKET & SEAL KIT (AUTOMATIC)			
1-E03	1010	CYLINDER HEAD & COVER						
1-H03	1030	CYLINDER BLOCK						
1-I03	1040	OIL PAN & TIMING COVER						
1-K03	1100	PISTON,CRANKSHAFT & FLYWHEEL						
1-N03	1200	VALVE SYSTEM						
1-D04	1300	INLET MANIFOLD						
1-E04	1310	EXHAUST MANIFOLD						
1-F04	1320	FUEL SYSTEM						
1-H04	1325	FUEL DISTRIBUTOR						
1-I04	1330	AIR CLEANER						
1-K04	1364	THROTTLE BODY						
1-L04	1370	EMISSION CONTROL SYSTEM (INLET SIDE)						
1-N04	1400	OIL PUMP & FILTER						
1-D05	1500	COOLING SYSTEM						
1-G05	1580	BRACKET,PULLEY & BELT						
1-C06	1600	CLUTCH DISC & COVER (MANUAL)						
1-D06	1700	TRANSMISSION CASE (MANUAL)						
1-E06	1710	TRANSMISSION GEARS(MANUAL)						
1-J06	1720	CHANGE CONTROL SYSTEM (MANUAL)						
1-M06	1800	ENGINE ELECTRICAL SYSTEM						
1-C07	1830	ALTERNATOR						
1-E07	1840	STARTER (MT)						
1-G07	1840 A	STARTER (AT)						
1-I07	1850	BATTERY						
1-J07	1910	TORQUE CONVERTER,OIL PUMP & PIPINGS (AUTOMATIC)						
1-M07	1920	TRANSMISSION CASE & MAIN CONTROL SYSTEM (AUTOMATIC)						
1-F08	1925	CONTROL VALVE (AUTOMATIC)						
1-M08	1930	CLUTCHES & PLANETARY GEARS (AUTOMATIC)						
1-H09	1940	GOVERNOR, LOW & REVERSE PISTON (AUTOMATIC)						
1-K09	1950	MANUAL LINKAGE SYSTEM (AUTOMATIC)						

SECTION NAME INDEX (CHASSIS)

LO.NO	SEC.NO	SECTION NAME	LO.NO	SEC.NO	SECTION NAME	LO.NO	SEC.NO	SECTION NAME
1-C11	2505	REAR PROPELLER SHAFT	1-C15	4300A	BRAKE PEDALS (AUTOMATIC TRANSMISSION)			
1-D11	2550	REAR DRIVE SHAFT	1-E15	4340	BRAKE MASTER CYLINDER & POWER BRAKE (W/O ANTI LOCK BRAKE SYSTEM)			
1-E11	2600	REAR AXLE	1-G15	4340 A	BRAKE MASTER CYLINDER & POWER BRAKE (ANTI LOCK BRAKE SYSTEM)			
1-F11	2610	REAR BRAKE MECHANISMS	1-I15	4360	BRAKE PIPINGS (W/O ANTI LOCK BRAKE SYSTEM)			
1-H11	2710	REAR DIFFERENTIALS (NORMAL DIFF.)	1-K15	4360 A	BRAKE PIPINGS (ANTI LOCK BRAKE SYSTEM)			
1-L11	2710 A	REAR DIFFERENTIALS (LIMITED SLIP DIFF.)	1-M15	4370	ANTILOCK BRAKE SYSTEM			
1-C12	2800	REAR SUSPENSION MECHANISMS	1-C16	4400	PARKING BRAKE SYSTEM			
1-D12	2801	REAR SPRING & DAMPER	1-E16	4500	FUEL PIPINGS			
1-E12	2810	REAR STABILIZER	1-G16	4600	CHANGE CONTROL SYSTEM (AT)			
1-F12	2830	REAR LOWER ARMS & SUB FRAME						
1-H12	3200	STEERING WHEEL						
1-I12	3210	STEERING COLUMN & SHAFTS						
1-J12	3220	STEERING GEAR (W/O POWER STEERING)						
1-L12	3220 A	STEERING GEAR (W/ POWER STEERING)						
1-C13	3240	POWER STEERING SYSTEM						
1-E13	3300	FRONT AXLE (W/O ANTI LOCK BRAKE SYSTEM)						
1-F13	3300 A	FRONT AXLE (ANTI LOCK BRAKE SYSTEM)						
1-G13	3310	FRONT BRAKE MECHANISMS						
1-H13	3400	FRONT SUSPENSION MECHANISMS						
1-J13	3401	FRONT SPRING & DAMPER						
1-K13	3410	CROSSMEMBER & STABILIZER						
1-L13	3700	TIRES & JACK						
1-C14	3900	ENGINE & T/MISSION MOUNTINGS						
1-D14	4000	EXHAUST SYSTEM						
1-E14	4140	CLUTCH RELEASE & MASTER CYLINDERS (MANUAL TRANSMISSION)						
1-F14	4145	CLUTCH PIPINGS (MANUAL TRANSMISSION)						
1-G14	4160	ACCELERATOR CONTROL SYSTEM						
1-H14	4200	FUEL TANK						
1-K14	4210	FUEL LID OPENER						
1-L14	4300	CLUTCH & BRAKE PEDALS (MANUAL TRANSMISSION)						

SECTION NAME INDEX (BODY)

LO.NO	SEC.NO	SECTION NAME
2-C03	0900	KEY SETS
2-E03	5000	FRONT BUMPER
2-H03	5010	REAR BUMPER
2-J03	5030	WINDOW MOULDING & COWL GRILLES
2-K03	5100	HEAD LAMPS
2-L03	5103	HEAD LAMP RETRACTORS
2-C04	5105	FRONT COMBINATION LAMPS
2-E04	5110	REAR COMBINATION LAMPS
2-H04	5120	LICENSE LAMPS
2-I04	5170	ORNAMENTS
2-J04	5180	REAR FINISHER
2-K04	5230	BONNET
2-M04	5260	TRUNK LID
2-N04	5310	FRONT PANELS
2-C05	5320	FENDER & WHEEL APRON PANELS
2-E05	5330	DASH & COWL PANELS
2-F05	5340	SIDE PANELS
2-K05	5370	FLOOR PANELS
2-N05	5380	FLOOR ATTACHMENTS (HOLE COVERS)
2-C06	5390	FLOOR ATTACHMENTS
2-C07	5500	DASHBOARD EQUIPMENTS
2-E07	5520	METER HOOD
2-F07	5530	SPEEDOMETER CABLE
2-G07	5540	METER COMPONENTS
2-I07	5560	DASHBOARD & RELATED PARTS
2-L07	5570	CONSOLE
2-C08	5580	VENTILATOR
2-E08	5700	SEATS
2-F08	5790	SEAT BELTS
2-G09	5795	AIR BAG
2-J09	5800	FRONT DOORS
2-M09	5830	FRONT DOOR MECHANISMS
2-E10	5840	FRONT DOOR TRIMS & RELATED PAR TS
2-C11	6100	HEATER

LO.NO	SEC.NO	SECTION NAME
2-D11	6110	HEATER UNIT COMPONENTS
2-E11	6115	HEATER CONTROLS COMPONENTS
2-F11	6120	HEATER BLOWER COMPONENTS
2-G11	6130	AIR CONDITIONER
2-K11	6140	COMPRESSOR COMPONENTS (AIR CON DITIONER)
2-M11	6150	COOLING UNIT (AIR CONDITIONER)
2-N11	6300	WINDOW GLASSES
2-C12	6330	SUNROOF
2-N12	6600	SWITCHES & RELAYS (ENGINE)
2-E13	6610	DASHBOARD SWITCHES
2-F13	6611	COMBINATION SWITCH
2-G13	6630	RELAYS & UNIT (BODY)
2-I13	6635	DOOR SWITCH & HORNS
2-J13	6640	AUTO CRUISE CONTROL SYSTEM
2-K13	6680	AUDIO SYSTEMS (RADIO & TAPE DE CK)
2-D14	6682	AUDIO SYSTEMS (ANTENNA & SPEAK ER)
2-G14	6700	WIRING HARNESSES(FRONT & REAR)
2-I14	6701	WIRING HARNESSES(ENGINE & T/MI SSION)
2-J14	6702	WIRING HARNESSES(DASHBOARD)
2-K14	6703	WIRING HARNESSES(DOOR,FLOOR/CE ILING)
2-L14	6704	WIRING HARNESS CLAMPS
2-C15	6720	WINDSHIELD WASHER (W/O ANTI LOCK BRAKE SYSTEM)
2-E15	6720 A	WINDSHIELD WASHER (ANTI LOCK BRAKE SYSTEM)
2-H15	6730	WINDSHIELD WIPERS
2-J15	6740	WIPER MOTOR COMPONENTS(FRONT)
2-K15	6820	FRONT HEADER TRIM & PILLAR TRI MS
2-L15	6840	TRIMS & SCUFF PLATES
2-N15	6860	FLOOR MATS & PADS
2-D16	6870	SERVICE TOOLS
2-E16	6900	VISORS,ASSIST HANDLES & MIRROR S

LO.NO	SEC.NO	SECTION NAME
2-G16	6930	CAUTION PLATES & LABELS
2-I16	7250	QUARTER WINDOW & TRIMS

10-271S

1-SEAL, VALVE ····· (8)
2-SEAL, VALVE ····· (8)
3-GASKET, HEAD COVER ····· (1)
4-GASKET, CYLINDER HEAD ····· (1)
5-GASKET, OIL PAN ····· (1)
6-GASKET, OIL PAN ····· (1)
7-GASKET (L) ····· (1)
8-GASKET (INN), TIMING BELT (L) ·· (1)
9-GASKET (C), TIMING BELT (L) ···· (1)
10-GASKET, T. BELT, COVER-C. ····· (1)
11-RUBBER SEAL-SEAL PLATE ····· (1)
12-SEAL, OIL ····· (1)
13-SEAL, OIL ····· (2)
14-SEAL, OIL ····· (1)
15-GASKET, IN. MANIFOLD ····· (1)
16-GASKET, EX. MANIFOLD ····· (1)
17-RING, 'O' ····· (1)
18-GASKET, WATER PUMP ····· (1)
19-GASKET, W. PUMP INLET ····· (1)
20-GASKET, THERMOSTAT COVER ····· (1)
21-RING, 'O' ····· (1)

10-235S

1-SEAL, VALVE ····· (8)
2-SEAL, VALVE ····· (8)
3-GASKET, HEAD COVER ····· (1)
4-GASKET, CYLINDER HEAD ····· (1)
12-SEAL, OIL ····· (1)
13-SEAL, OIL ····· (2)
15-GASKET, IN. MANIFOLD ····· (1)
16-GASKET, EX. MANIFOLD ····· (1)
20-GASKET, THERMOSTAT COVER ····· (1)

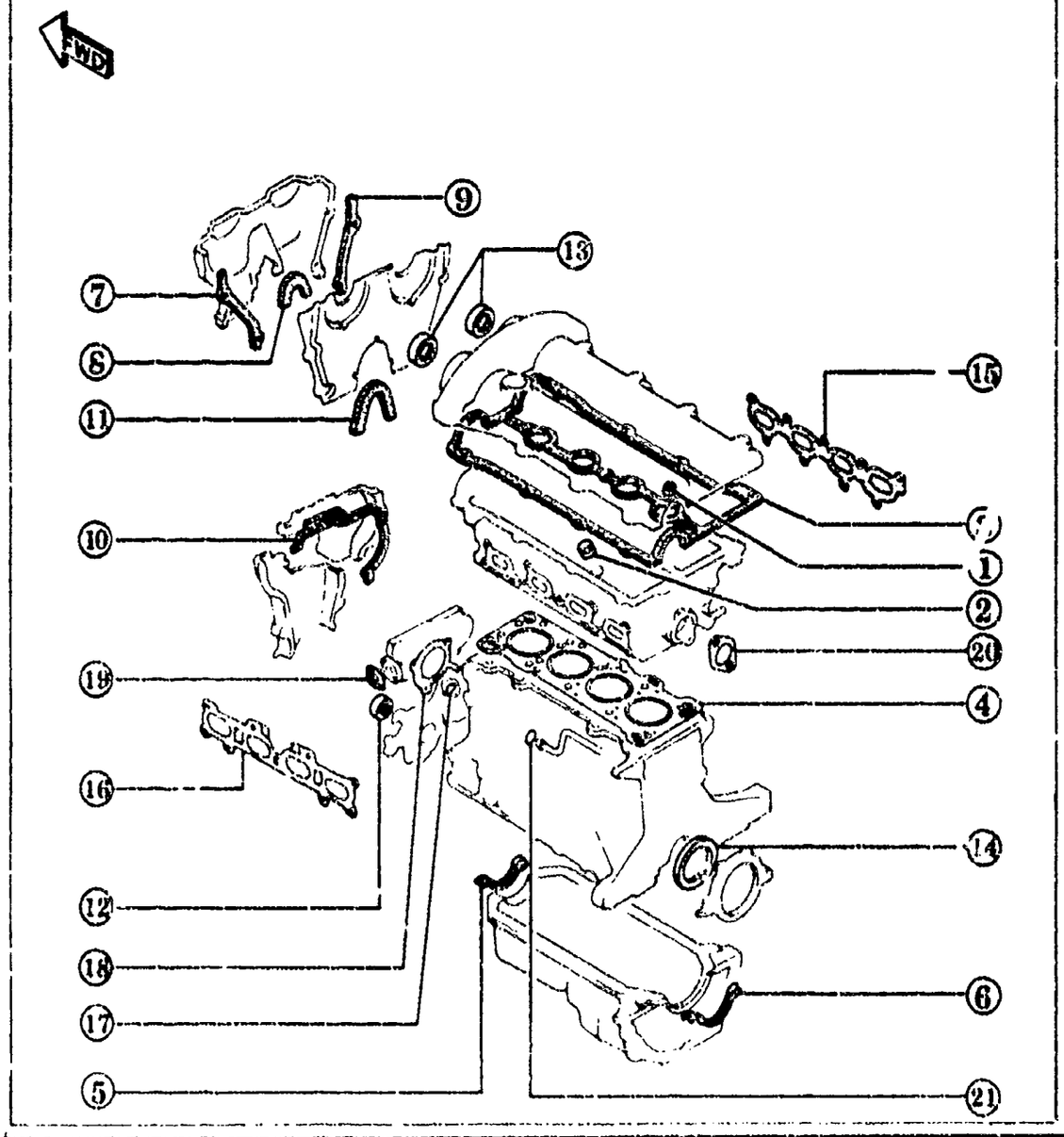

AUNA04

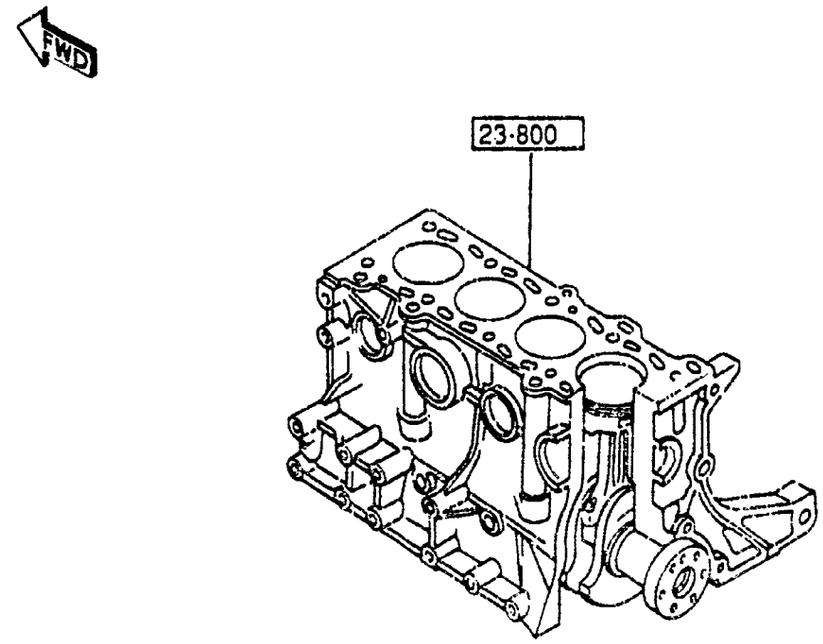

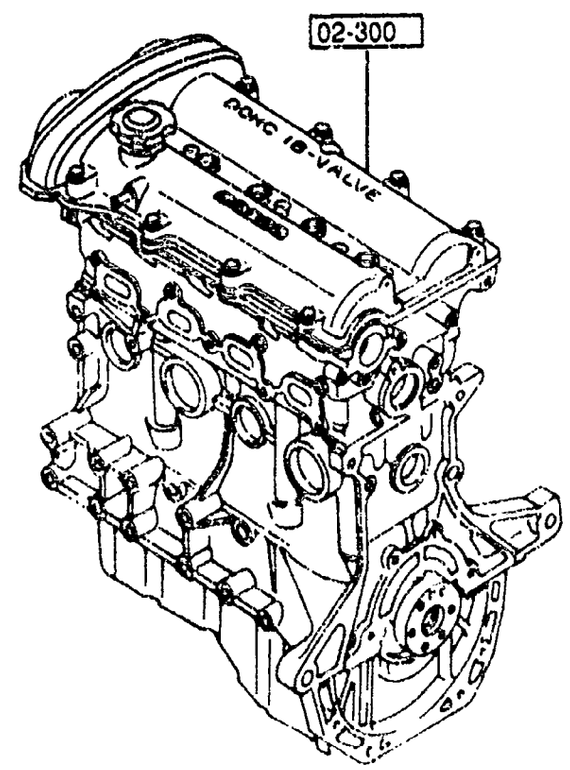

AUNA04

10-271S

1-SEAL, VALVE ..... (8)
2-SEAL, VALVE ..... (8)
3-GASKET, HEAD COVER ..... (1)
4-GASKET, CYLINDER HEAD ..... (1)
5-GASKET, OIL PAN ..... (1)
6-GASKET OIL PAN ..... (1)
7-GASKET (L) ..... (1)
8-GASKET (INN), TIMING BELT (L) .. (1)
9-GASKET (C), TIMING BELT (L) .... (1)
10-GASKET, T. BELT, COVER-C. ..... (1)
11-RUBBER SEAL-SEAL PLATE ..... (1)
12-SEAL, OIL ..... (1)
13-SEAL, OIL ..... (2)
14-SEAL, OIL ..... (1)
15-GASKET, IN. MANIFOLD ..... (1)
16-GASKET, EX. MANIFOLD ..... (1)
17-RING 'O' ..... (1)
18-GASKET, WATER PUMP ..... (1)
19-GASKET, W. PUMP INLET ..... (1)
20-GASKET, THERMOSTAT COVER ..... (1)
21-RING 'O' ..... (1)

10-235S

1-SEAL, VALVE ..... (8)
2-SEAL, VALVE ..... (8)
3-GASKET, HEAD COVER ..... (1)
4-GASKET, CYLINDER HEAD ..... (1)
12-SEAL, OIL ..... (1)
13-SEAL, OIL ..... (2)
15-GASKET, IN. MANIFOLD ..... (1)
16-GASKET, EX. MANIFOLD ..... (1)
20-GASKET, THERMOSTAT COVER ..... (1)

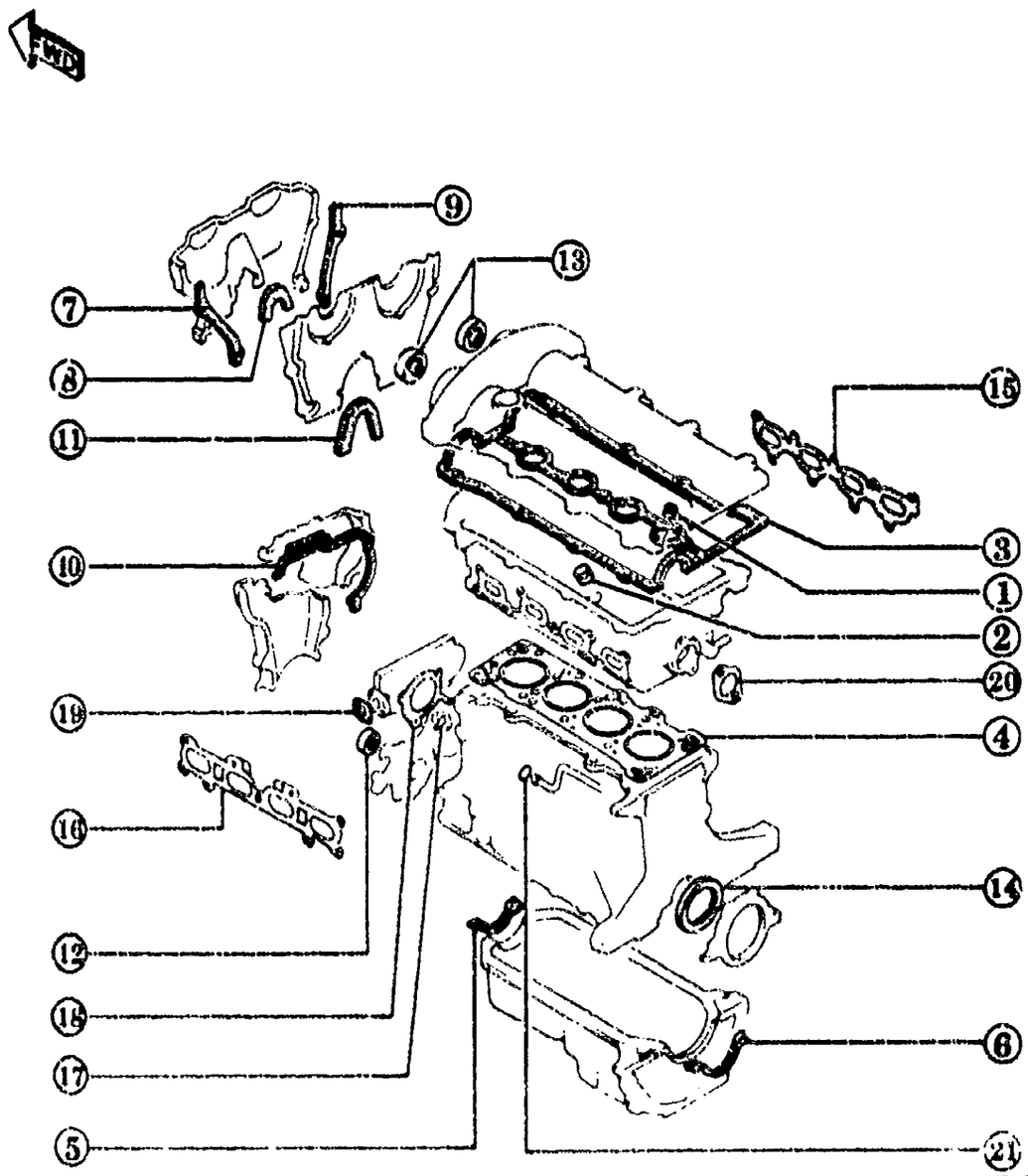

AUNA04

PART NO.	QTY	MODEL/RESTRICTION	MODEL/RESTRICTION	MODEL/RESTRICTION	FROM-TO
02-300		ENGINE,PARTIAL			
BPE8-02-300	1				4106-
10-235S		GASKET SET,CYL. HEAD			
BAN2-10-235	1				
10-271S		GASKET SET,ENGINE			
BAN2-10-271	1				
23-800		ENGINE,SHORT			
BPF1-02-200 AN(BPF1-02-200A)	1				-3B01
BPF1-02-200A	1				3B01-

3B01 NA3***-505807
4106 NA3***-509503

1010 CYLINDER HEAD & COVER

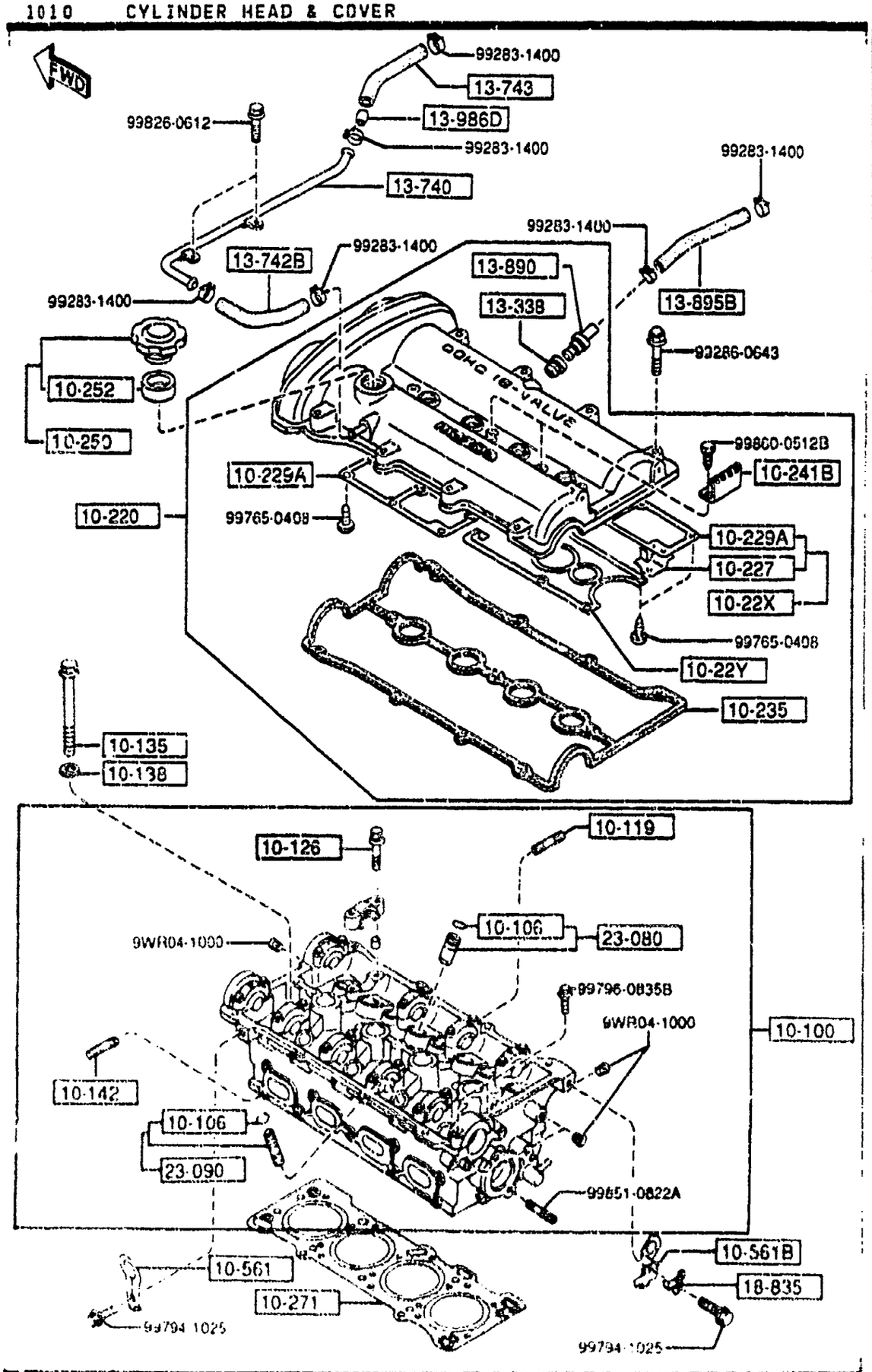

PART NO.	QTY	MODEL/RESTRICTION	MODEL/RESTRICTION	MODEL/RESTRICTION	FROM-TO
10-100		HEAD,CYLINDER			
BPE8-10-100A	1				
10-106		CLIP,VALVE GUIDE			
B660-10-106	16				
10-119		STUD			
FE4J-13-146	9				
10-126		BOLT,CAMSHAFT CAP			
B660-10-126	20				
10-135		BOLT,CYLINDER HEAD			
B660-10-135A	10				
10-138		WASHER,PLAIN CYL. HEAD			
B630-10-138A	10				
10-142		STUD,EX. MANIFOLD			
B661-10-104	9				
10-22X		PLATE,OIL BAFFLE-IN. SIDE			
B61P-10-22X	1				
10-22Y		PLATE,OIL BAFFLE-EX.			
B6S7-10-22Y	1				
10-220		COVER,CYLINDER HEAD			
BPE8-10-210A	1				
10-227		PLATE,BAFFLE			
B61P-10-227	1				
10-229A		PLATE,OIL BAFFLE			
B6S7-10-225	2				
10-235		GASKET,HEAD COVER			
BP05-10-235B	1				
10-241B		PROTECTOR,HT.CORD-S. TANK			
B660-10-241	2				

1010 CYLINDER HEAD & COVER

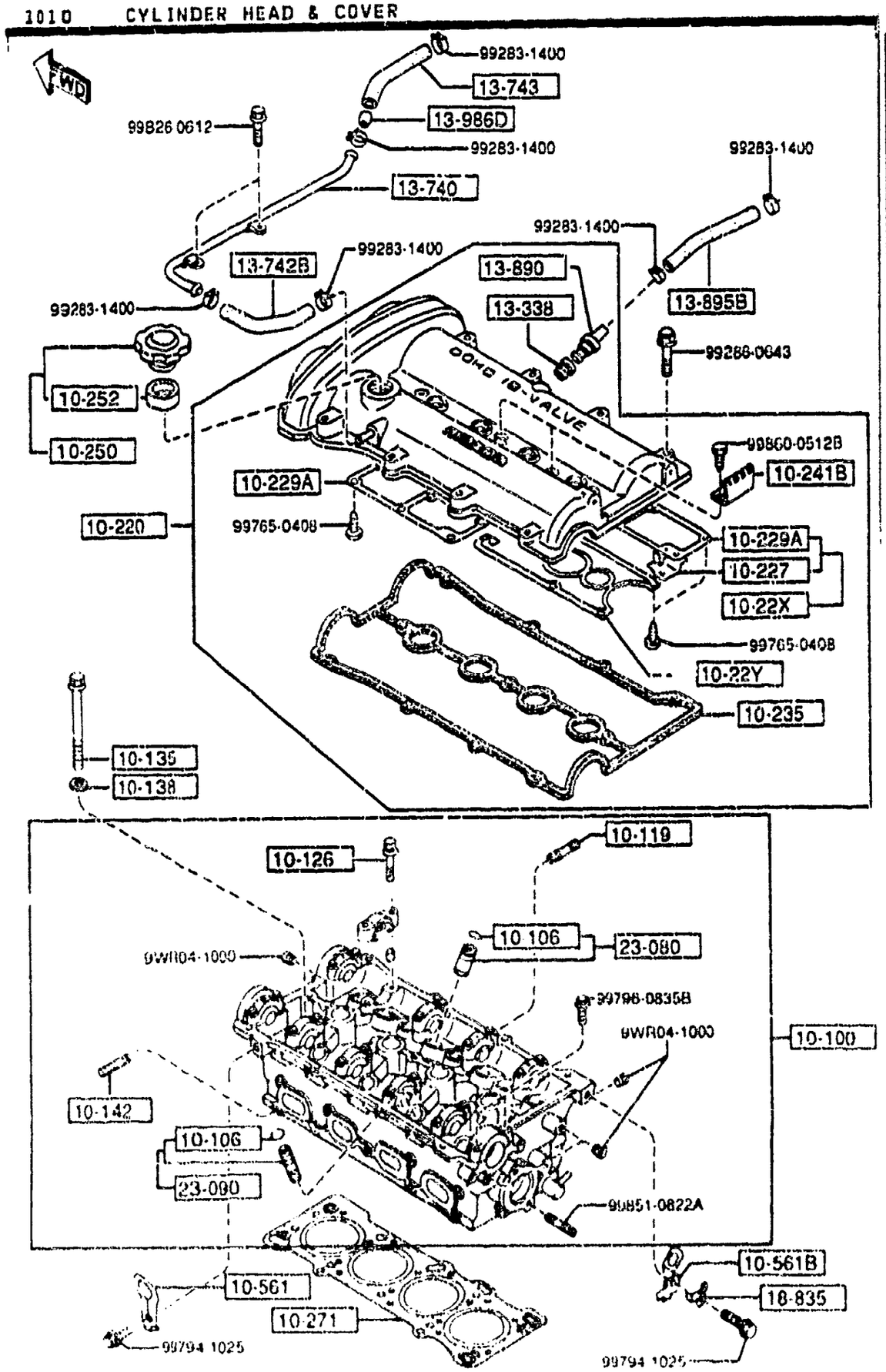

PART NO.	QTY	MODEL/RESTRICTION	MODEL/RESTRICTION	MODEL/RESTRICTION	FROM-TO
10-250		CAP,OIL FILLER			
0453-10-250A	1				
10-252		GASKET			
0324-10-252	1				
10-271		GASKET,CYLINDER HEAD			
BP26-10-271	1	NON ASBESTOS			
10-561		HANGER,ENGINE			
B660-10-561	1				
10-561B		HANGER,ENGINE-REAR			
BPE8-10-566A	1				
13-338		SEAL,RUBBER			
E301-13-338A	1				
13-740		HOSE,VENT.-PURGE CON T. V.			
BPE8-13-74X	1				
13-742B		HOSE,VENTILATION			
B61P-13-742A	1				
13-743		HOSE,VENTILATION			
BPE8-13-743	1				
13-890		VALVE,P.C.V.			
BP05-13-890	1				
13-895B		HOSE,P.C.V.			
BPE8-13-895	1				
13-986D		ORIFICE			
B61P-13-986	1				
18-835		BRACKET,WIRE CLIP-OX YGEN			
BPE8-18-830B	1				
23-080		GUIDE,VALVE			

1010 CYLINDER HEAD & COVER

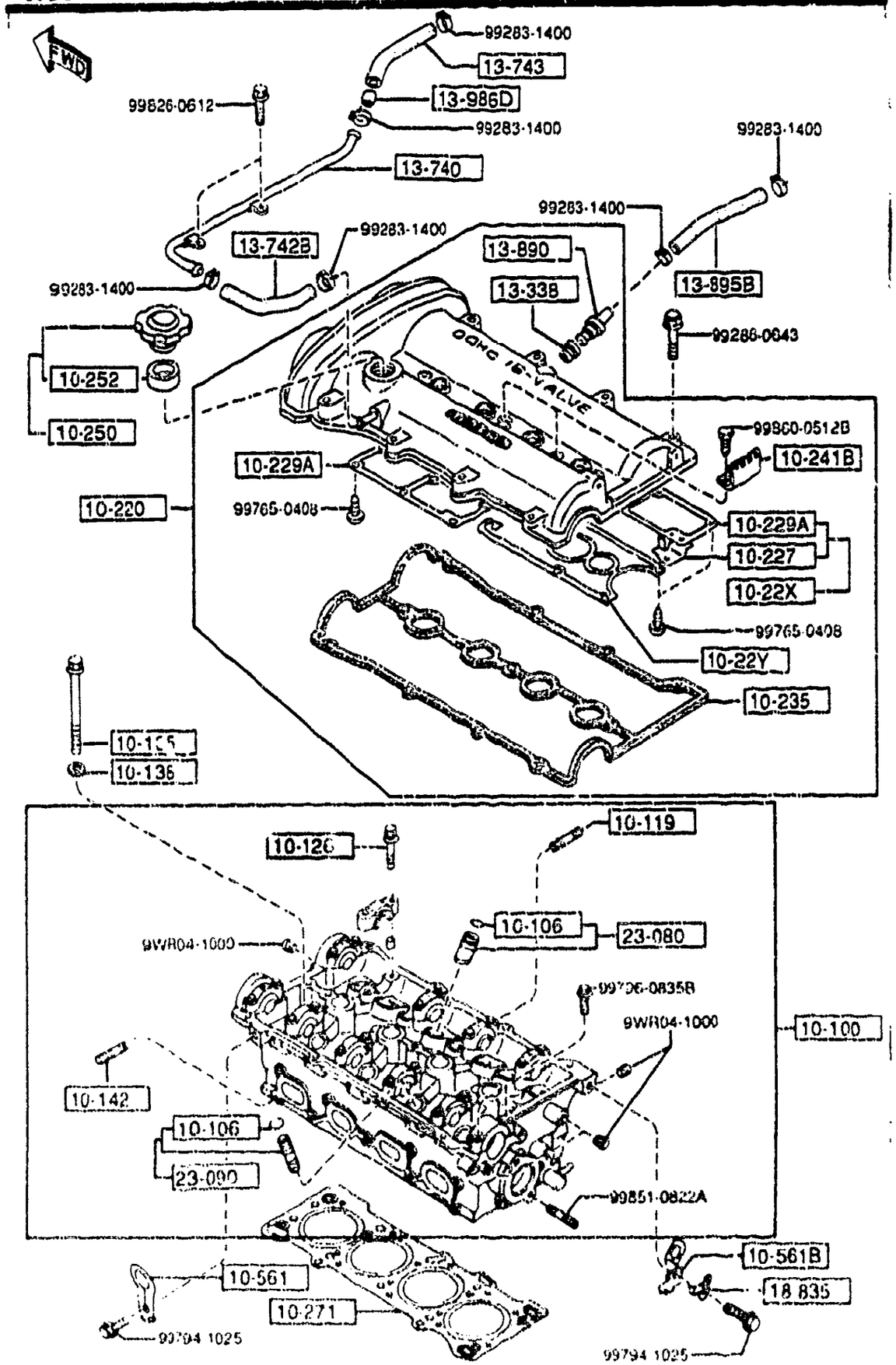

PART NO.	QTY	MODEL/RESTRICTION	MODEL/RESTRICTION	MODEL/RESTRICTION	FROM-TO
CONT'D					
R6Z1-10-280	8				
+----------+					
| 23-090 |		GUIDE,VALVE			
+----------+					
BPY0-10-290	8				

1030 CYLINDER BLOCK

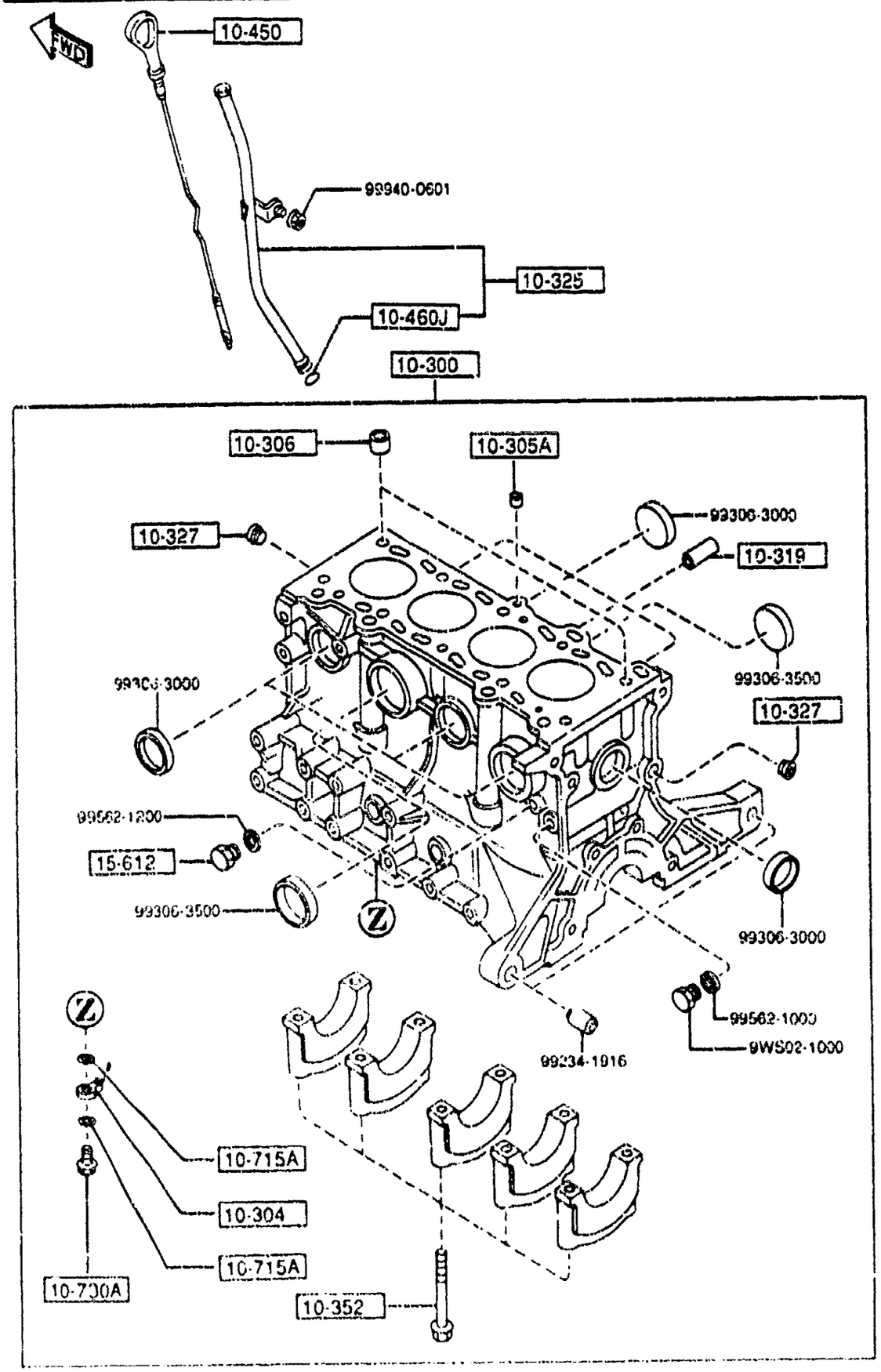

PART NO.	QTY	MODEL/RESTRICTION	MODEL/RESTRICTION	MODEL/RESTRICTION	FROM-TO
10-300		BLOCK,CYLINDER			
BP05-10-300M	1				
10-304		JET,OIL			
BP01-10-580	4				
10-305A		PLUG			
B366-10-305	1				
10-306		PIN,TUBULAR			
B630-10-306	2				
10-319		JOINT			
E5B6-10-319C	1				
10-325		PIPE,OIL LEVEL GAUGE			
BPE8-10-440	1				
10-327		PLUG,BLIND			
0221-10-327	2				
10-352		BOLT,BEARING CAP			
B630-10-352	10				
10-450		GAUGE,OIL LEVEL			
BPE8-10-450	1				
10-460J		RING,'O'			
99541-00907	1				
10-715A		GASKET,OIL JET			
SE01-10-715	8				
10-730A		VALVE,OIL JET			
SE01-10-730	4				
15-612		PLUG			
SE01-15-612	1				

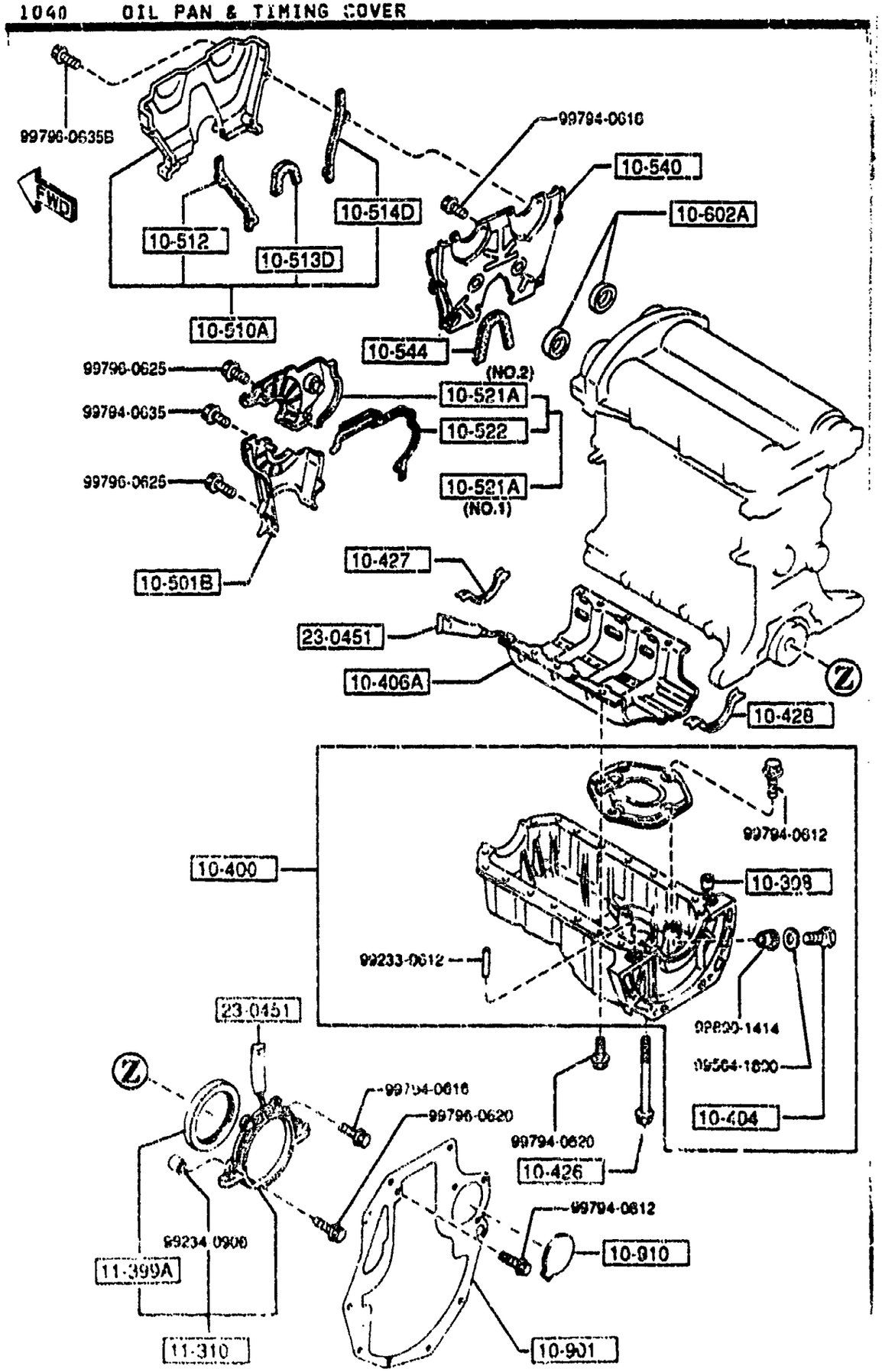

PART NO.	QTY	MODEL/RESTRICTION	MODEL/RESTRICTION	MODEL/RESTRICTION	FROM-TO
10-308		PIN,TUBULAR			
B6F4-10-308	1				
10-400		PAN,OIL			
BPE8-10-400A	1				
10-404		PLUG,DRAIN			
B6S7-10-404A	1				
10-406A		PLATE,OIL BAFFLE-CYL. BLK			
BPE8-10-40Y	1				
10-426		BOLT			
B6S7-10-465	2				
10-427		GASKET,OIL PAN			
B6F4-10-427	1				
10-428		GASKET,OIL PAN			
B6F4-10-428	1				
10-501B		COVER,TIMING BELT-LWR			
B660-10-501E	1				
10-510A		COVER(UP.),TIMING CHAIN			
B61P-10-510	1				
10-512		GASKET(L)			
B61P-10-512	1	NON ASBESTOS			
10-513D		GASKET(INN),TIMING BELT(L)			
B61P-10-513	1	NON ASBESTOS			
10-514D		GASKET(C),TIMING BELT(L)			
B61P-10-514	1	NON ASBESTOS			
10-521A		COVER,TIMING BELT-C.			
B660-10-520B	1	(ILLUST. NO.1)			
*B660-10-521B	1	(ILLUST. NO.2)			

1040 OIL PAN & TIMING COVER

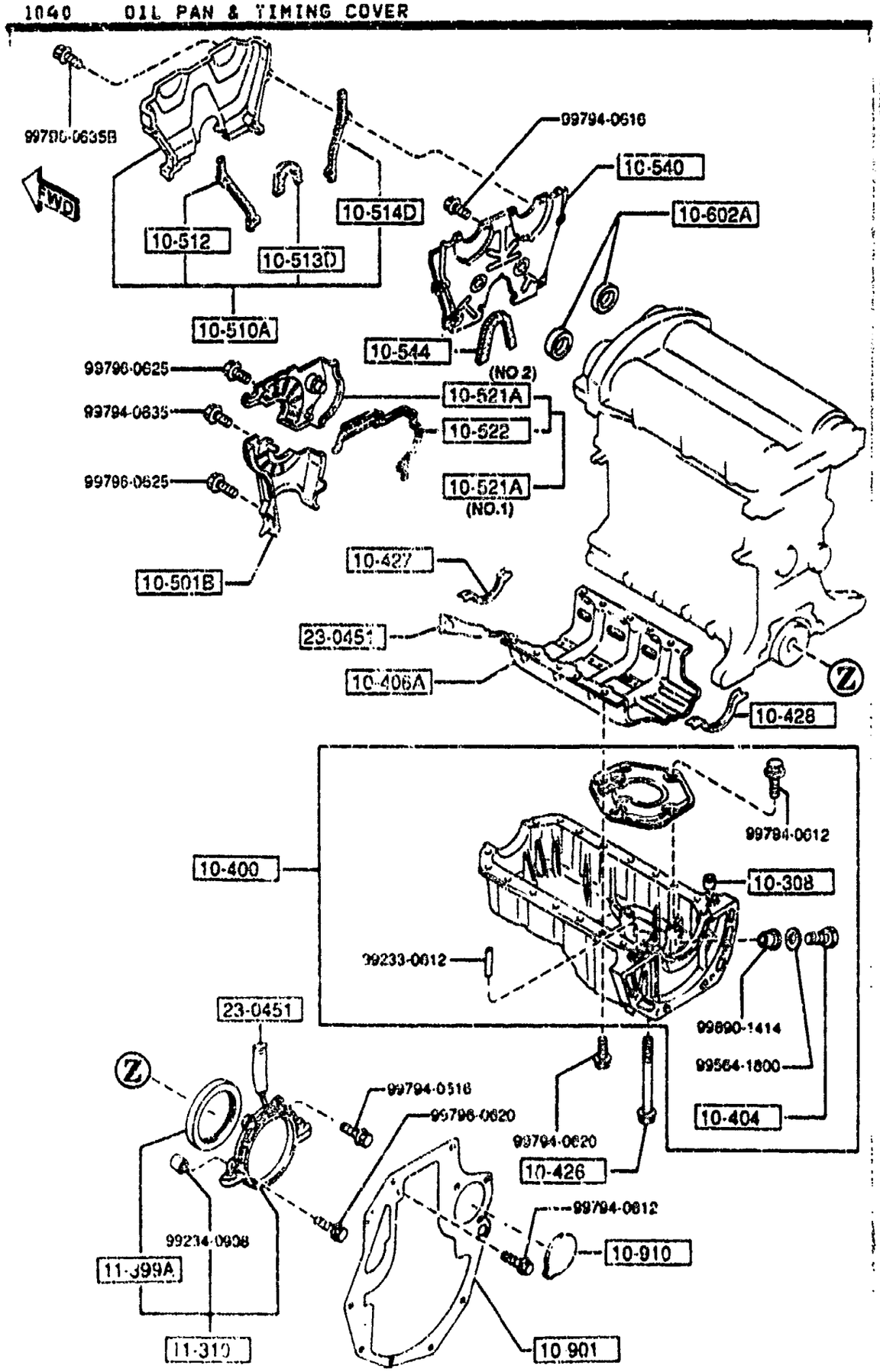

PART NO.	QTY	MODEL/RESTRICTION	MODEL/RESTRICTION	MODEL/RESTRICTION	FROM-TO
10-522 B660-10-522	1	GASKET,T.BELT COVER-C. NON ASBESTOS			
10-540 B61P-10-540C	1	PLATE,SEAL-T.BELT COVER U			
10-544 B61P-10-544	1	RUBBER,SEAL-SEAL PLATE			
10-602A FS05-10-602A	2	SEAL,OIL			
10-901 B61P-10-901A	1	PLATE,END (MT)			
B64J-10-901	1	(AT)			
10-910 B64J-10-903	1	COVER,END PLATE (AT)			
11-310 B366-11-310C	1	COVER,REAR			
11-399A BP05-11-312	1	SEAL,OIL-CRANKSHAFT			
23-0451 8527-77-739	1	TUBE,SILICON			

1100 PISTON,CRANKSHAFT & FLYWHEEL

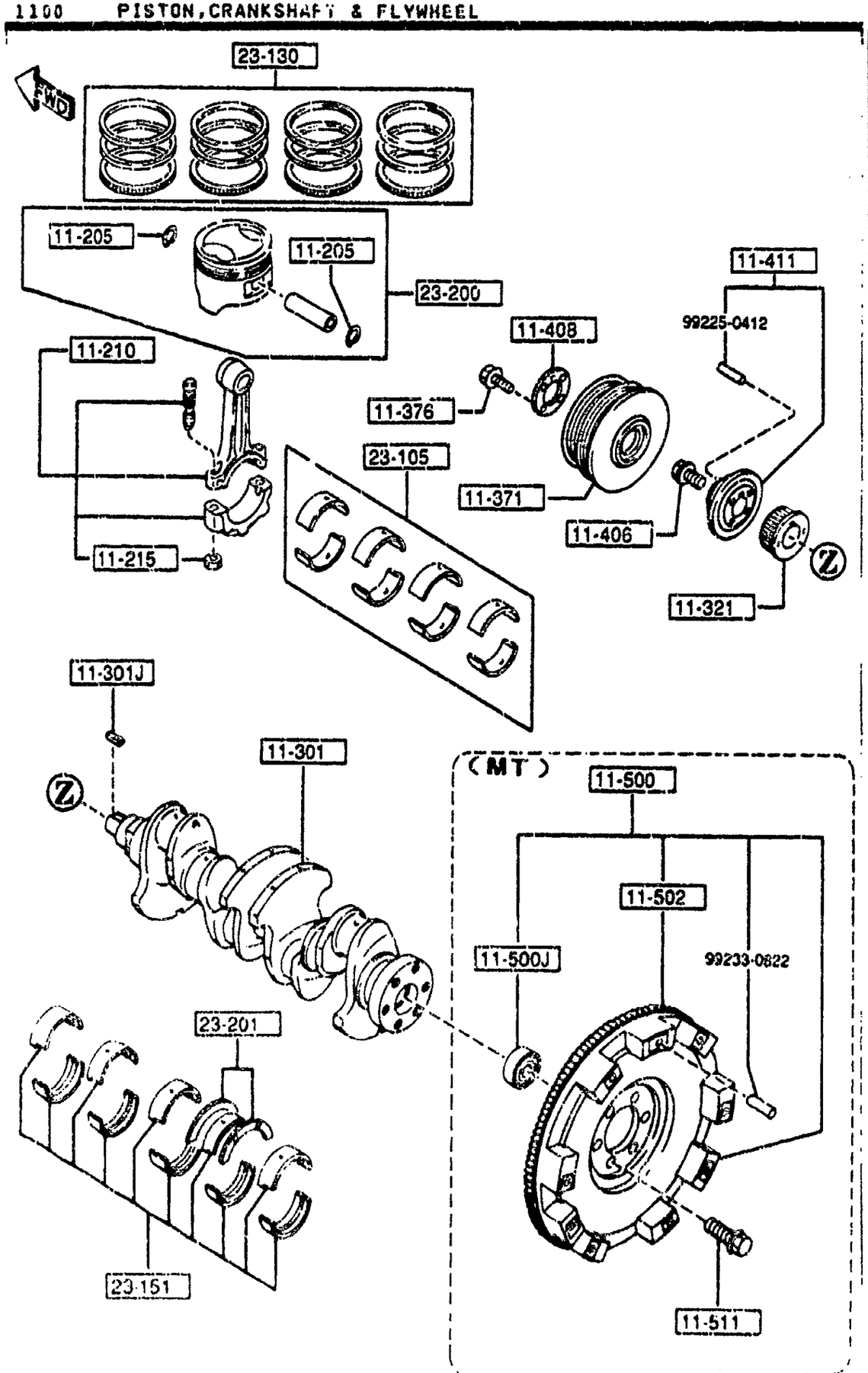

PART NO.	QTY	MODEL/RESTRICTION	MODEL/RESTRICTION	MODEL/RESTRICTION	FROM-TO
11-205 0221-11-205	8	CLIP			
11-210 B6S7-11-210E	4	ROD,CONNECTING			
11-215 B6S7-11-215A	8	NUT,CONNECTING ROD			
11-301 BP06-11-300C	1	CRANKSHAFT			
11-301J B3C7-11-317	1	KEY,WOODRUFF-PULLEY			
11-321 B3C7-11-321	1	PULLEY,TIMING BELT			
11-371 BPD3-11-401	1	PULLEY,CRANKSHAFT			
11-376 JF01-11-405	4	BOLT,PULLEY			
11-406 B3C7-11-406	1	BOLT,LOCK-C.SHAFT PULLEY			
11-408 B3C7-11-408	1	PLATE,CRANKSHAFT PULLEY			
11-411 B3C7-11-400	1	BOSS,PULLEY			
11-500 BPE8-11-500	1	WHEEL,FLY (MT)			
11-500J F8C1-11-303	1	BEARING,BALL-FLY WHEEL (MT)			
11-502 B367-11-502		GEAR,RING-FLY WHEEL YOSHIWA			

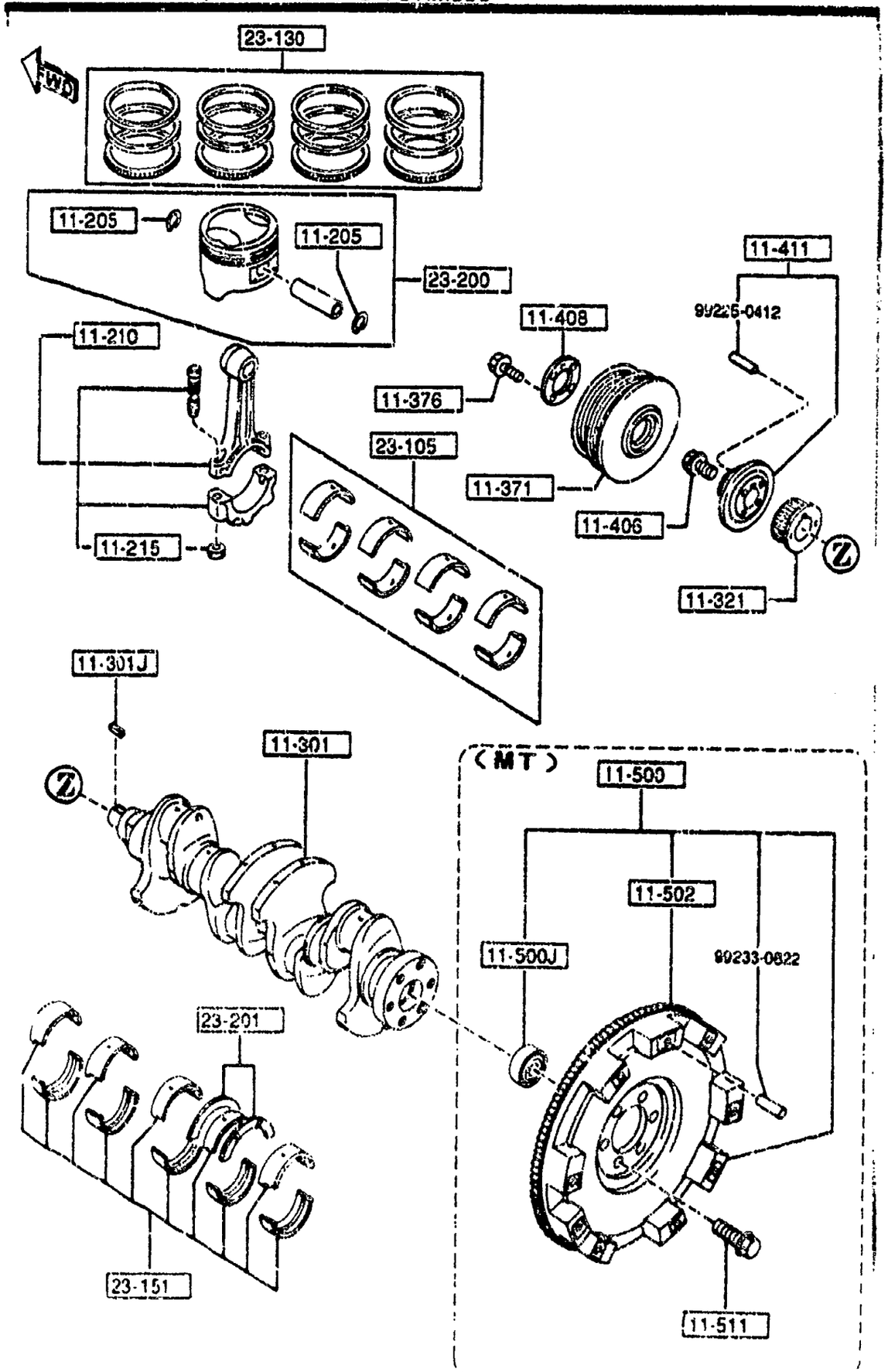

PART NO.	QTY	MODEL/RESTRICTION	MODEL/RESTRICTION	MODEL/RESTRICTION	FROM-TO
CONT'D					
	1	(MT)			
+---------+					
| 11-511 |		BOLT,LOCK-FLYWHEEL			
+---------+					
F201-11-511A	6	(MT)			
+---------+					
| 23-105 |		METAL SET,CONN.ROD			
+---------+					
B6V2-11-SE0	1	STD			
B6V2-11-SFX	1	O.S. 0.50			
B6V2-11-SFV	1	O.S. 0.75			
B6V2-11-SF0	1	O.S. 0.25			
+---------+					
| 23-130 |		RING SET,PISTON			
+---------+					
BPY1-11-SC0	1	STD.			
BPY1-11-SDX	1	O.S. 0.50			
BPY1-11-SD0	1	O.S. 0.25			
+---------+					
| 23-151 |		METAL SET,MAIN BRG.			
+---------+					
B6V2-11-SG0	1	STD.			
B6Y1-11-SHX	1	O.S. 0.50			
B6Y1-11-SHV	1	O.S. 0.75			
B6Y1-11-SH0	1	O.S. 0.25			
+---------+					
| 23-200 |		PISTON SET			
+---------+					
BPY1-11-SA0		STD.			
AN(BPY1-11-SA0A)	4				-3B01
BPY1-11-SBX		O.S. 0.50			
AN(BPY1-11-SBXA)	4				-3B01
BPY1-11-SB0		O.S. 0.25			
AN(BPY1-11-SB0A)	4				-3B01
BPY1-11-SA0A	4	STD.			3B01-
BPY1-11-SBXA	4	O.S. 0.50			3B01-
BPY1-11-SB0A		O.S. 0.25			

3B01 NA3###-505807

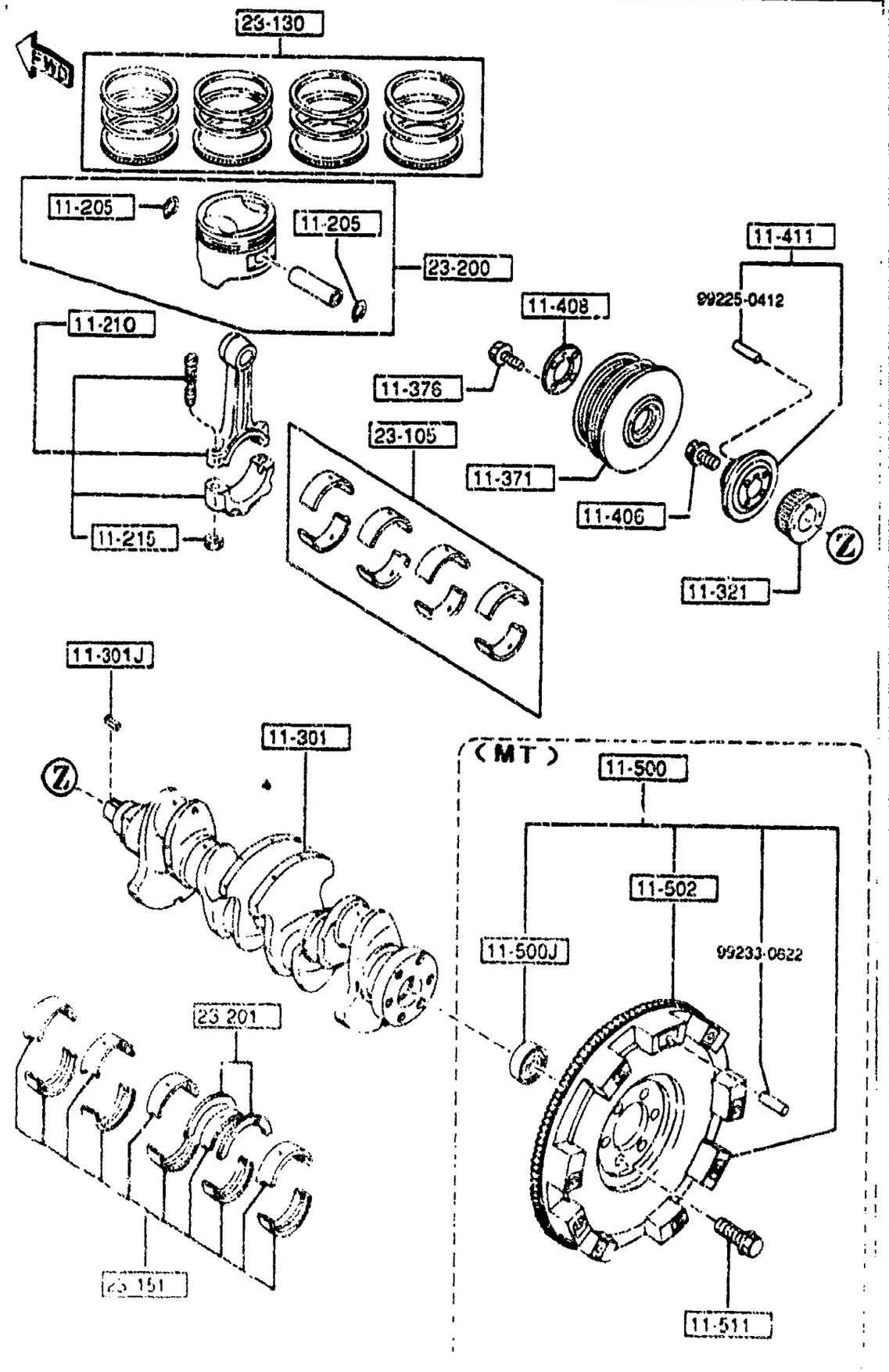

PART NO.	QTY	MODEL/RESTRICTION	MODEL/RESTRICTION	MODEL/RESTRICTION	FROM-TO
CONT'D					
	4				3B01-
+----------+					
| 23-201 |		METAL SET,THRUST			
+----------+					
B6Y1-11-SX0	1	STD.			
B6Y1-11-SKX	1	O.S. 0.50			
B6Y1-11-SKY	1	O.S. 0.75			
B6Y1-11-SX0	1	O.S. 0.25			

3B01 NA3###-505807

1200 VALVE SYSTEM

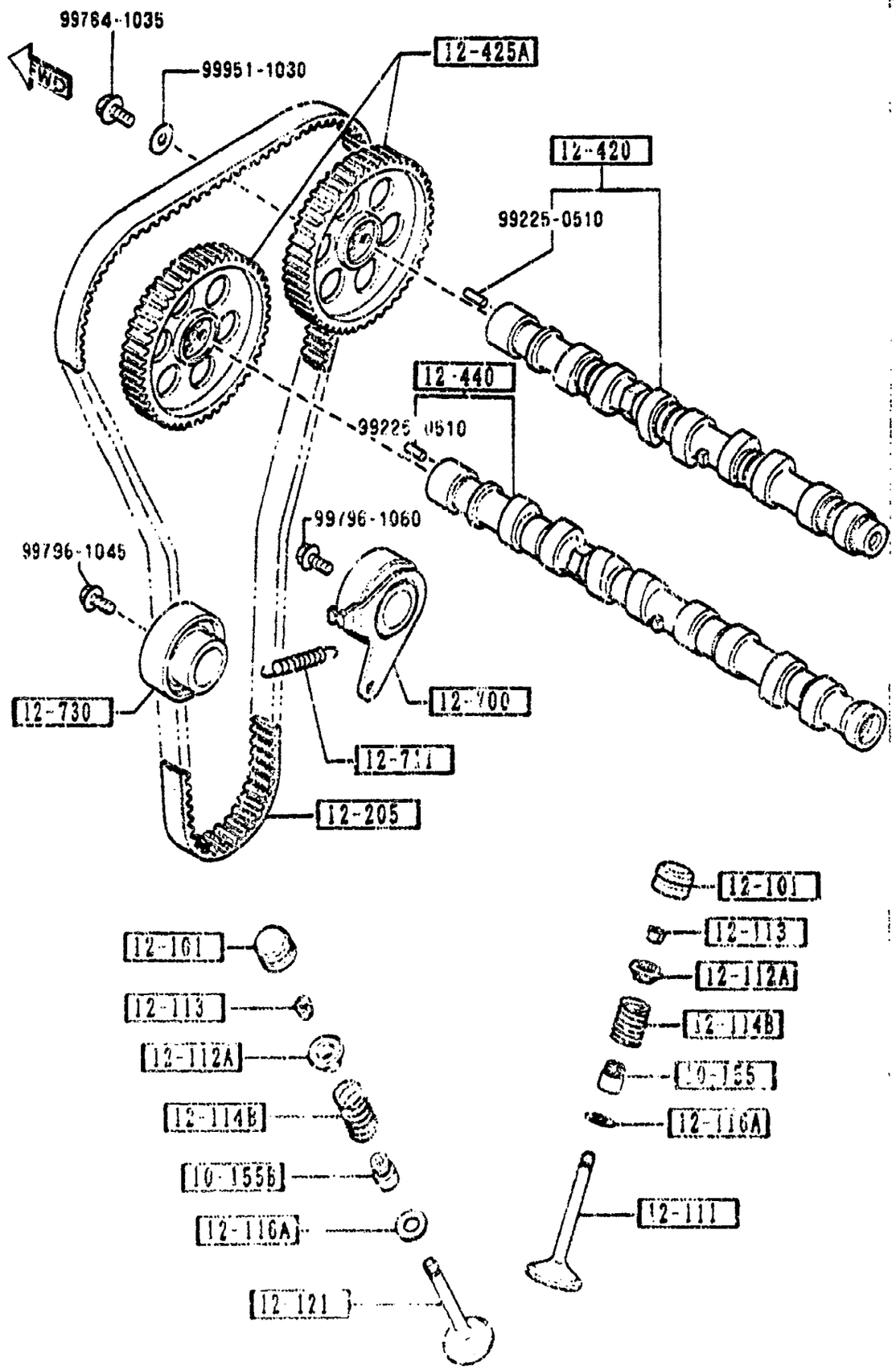

PART NO.	QTY	MODEL/RESTRICTION	MODEL/RESTRICTION	MODEL/RESTRICTION	FROM-TO
10-155		SEAL,VALVE			
KL01-10-155	8	NOK			
10-155B		SEAL,VALVE			
KL02-10-155	8	NOK			
12-101		ADJUSTER,HYDRAULIC L ASH			
KL01-12-101B	16	NITTAN VALVE			
12-111		VALVE,INLET			
BP05-12-111	8	NITTAN VALVE			
BP06-12-111	8	FUJI VALVE			
12-112A		SEAT,VALVE SPG-UP.			
BP05-12-113	16				
12-113		COTTER,VALVE-IN.			
FE3N-12-114	32				
12-114B		SPRING,VALVE			
BP05-12-125	16				
12-116A		SEAT,VALVE SPG.-LWR			
B660-12-123A	16				
12-121		VALVE,EXHAUST			
BP05-12-121A	8				
12-205		BELT,TIMING			
B657-12-205C	1	UNITTA			
12-420		CAMSHAFT			
BP05-12-420D A (BP05-12-420E)	1				-4701
*BP05-12-420E	1				4701-
12-425A		PULLEY,CAMSHAFT			

4701 AA3***-521312

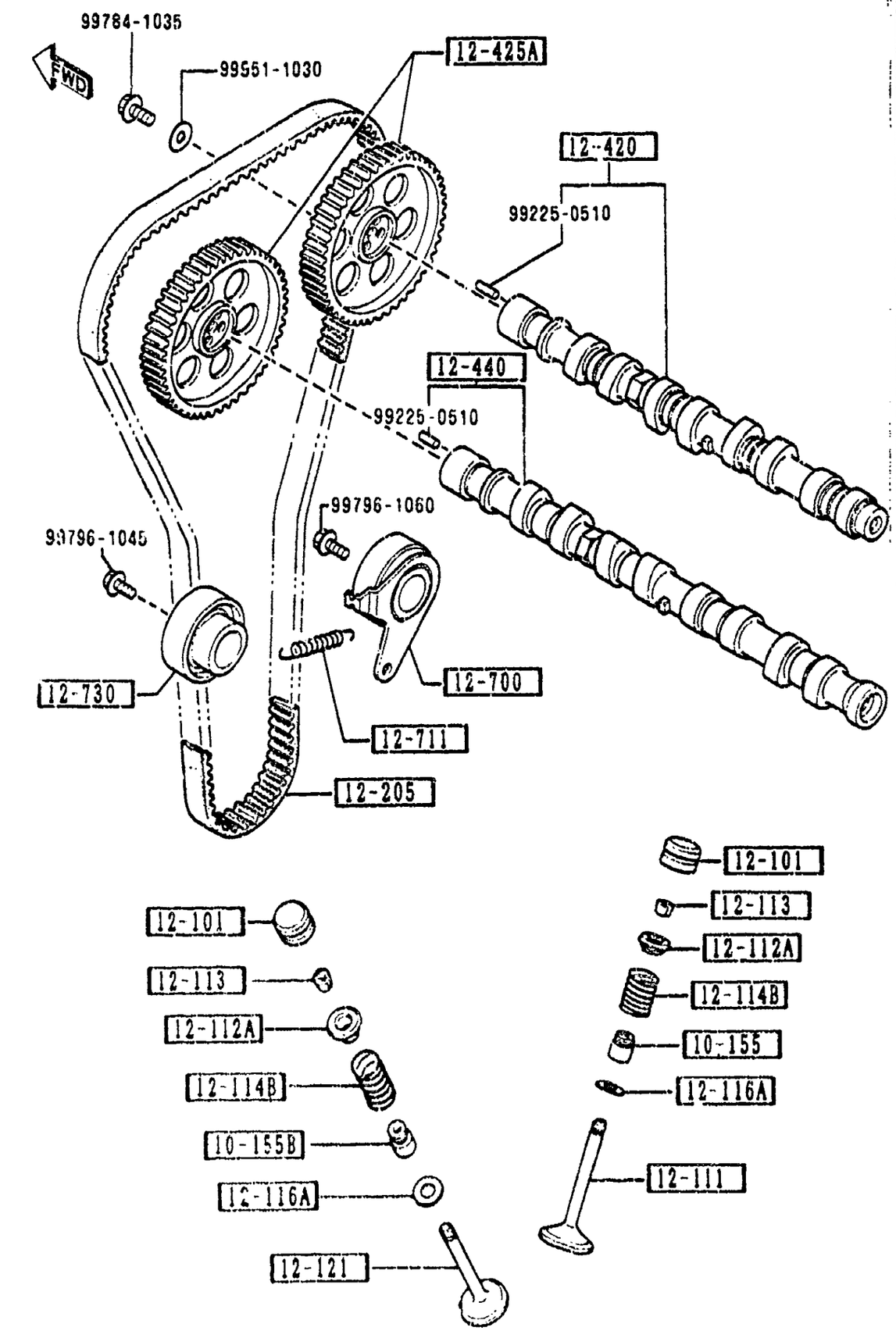

PART NO	QTY	MODEL/RESTRICTION	MODEL/RESTRICTION	MODEL/RESTRICTION	FROM-TO
CONT'D					
B6S7-12-425A	2				
+----------+					
| 12-440 |		CAMSHAFT,EXHAUST			
+----------+					
BP06-12-440B	1				-4701
A (BP06-12-440C)					
*BP06-12-440C	1				4701-
+----------+					
| 12-700 |		TENSIONER,T.BELT			
+----------+					
B660-12-700D	1				-3B26
AN(B660-12-700E)					
B660-12-700E	1				3B26-
+----------+					
| 12-711 |		SPRING,TENSIONER			
+----------+					
B660-12-711C	1				
+----------+					
| 12-730 |		IDLER,TIMING BELT			
+----------+					
B660-12-730C	1				

3B26 NA7***-507477
4701 NA5***-521312

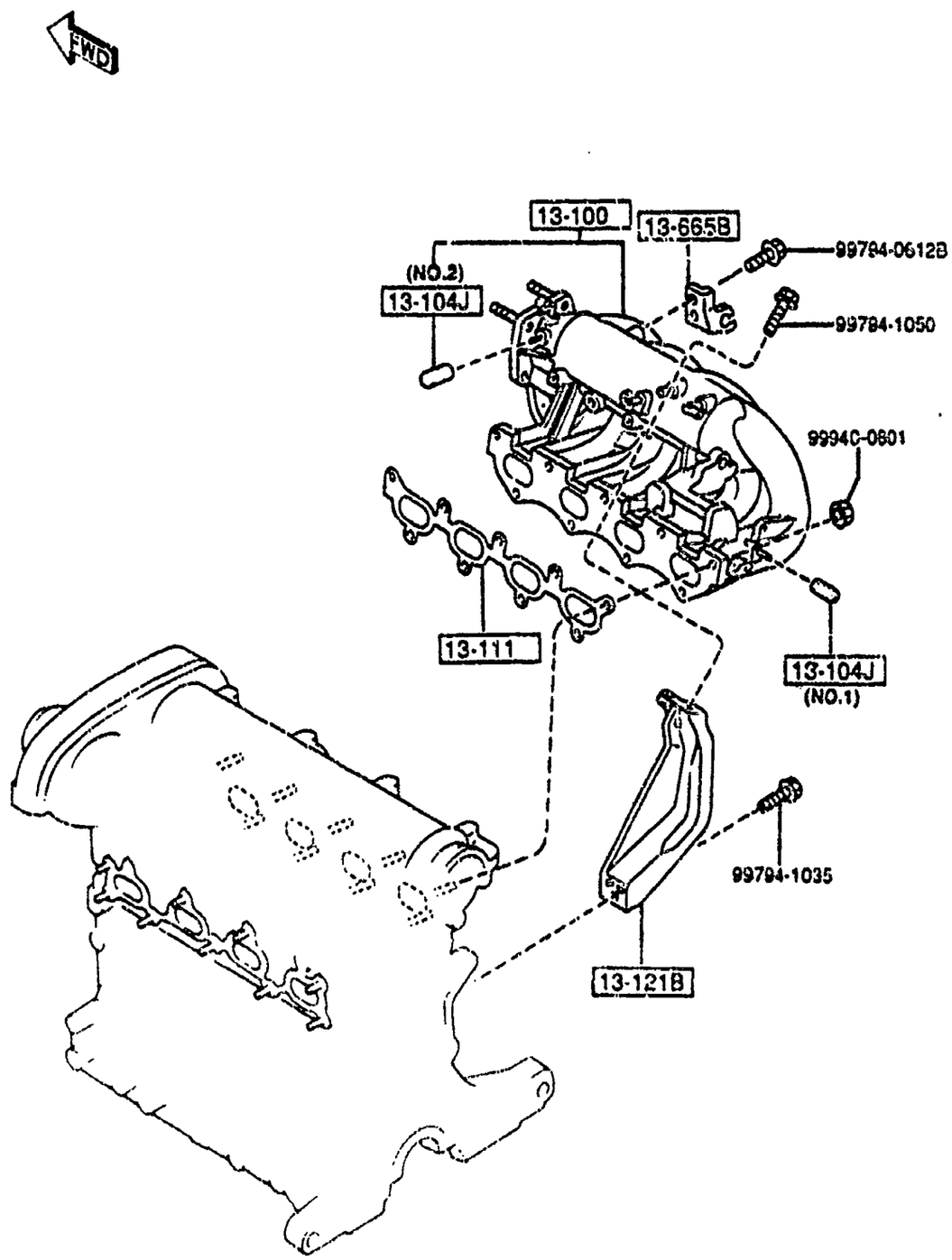

1300 -1 * INLET MANIFOLD

PART NO.	QTY	MODEL/RESTRICTION	MODEL/RESTRICTION	MODEL/RESTRICTION	FROM-TO
13-100		MANIFOLD,INLET			
BPE8-13-100C	1				
13-104J		CAP,BLIND			
F8L7-13-104	1	(ILLUST. NO.1) (MT)			
1010-13-104	1	(ILLUST. NO.2)			
13-111		GASKET,IN.MANIFOLD			
BP05-13-111	1	NON ASBESTOS			
13-121B		STAY,MANIFOLD			
BPE8-13-121	1				
13-665B		BRACKET,ACCEL WIRE			
B61P-13-665	1				

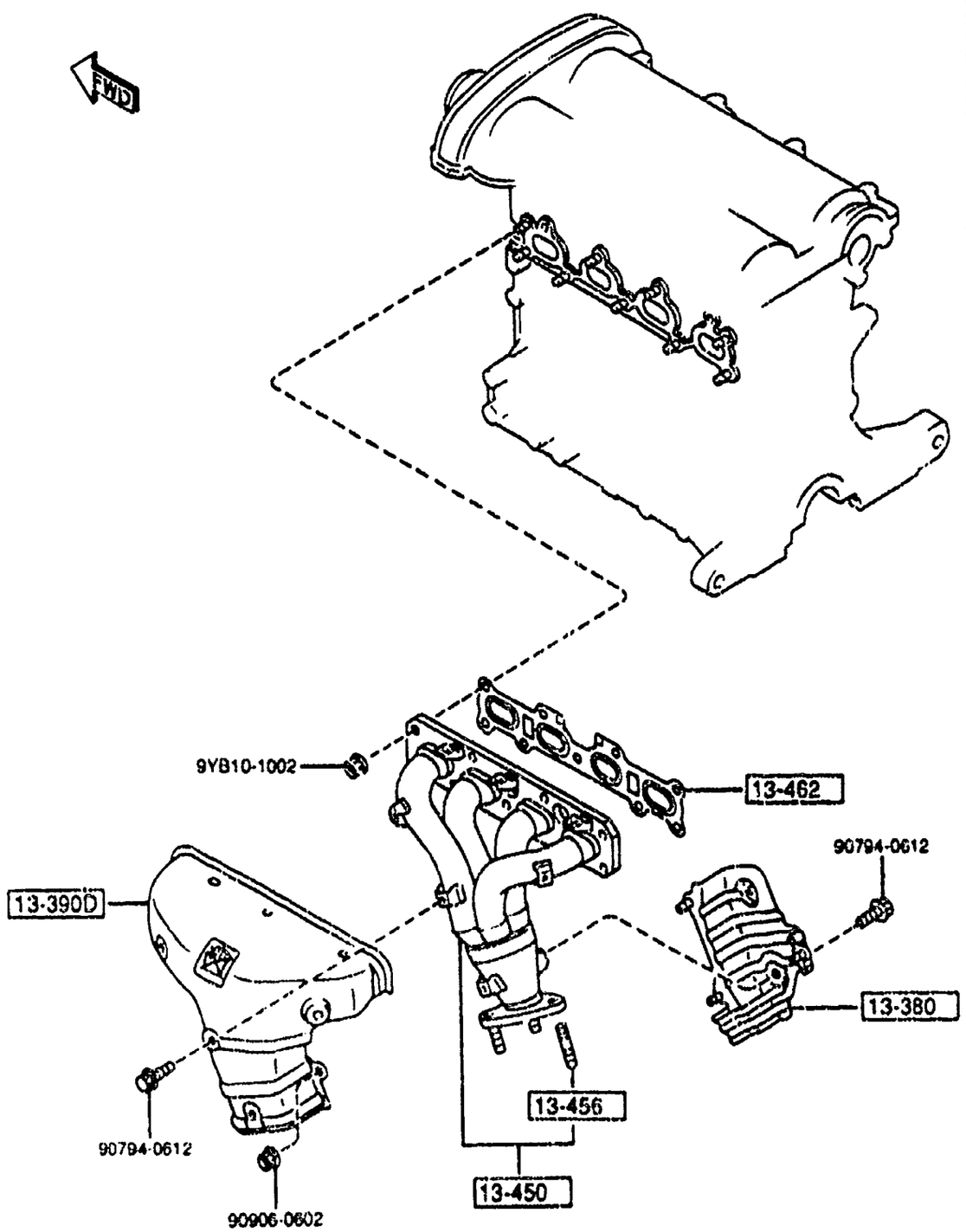

1310 -1 * EXHAUST MANIFOLD

PART NO.	QTY	MODEL/RESTRICTION	MODEL/RESTRICTION	MODEL/RESTRICTION	FROM-TO
13-380		INSULATOR,HEAT			
BPE8-13-380A	1				
13-390D		INSULATOR,EX.MANIFOLD			
BPE8-13-390	1				
13-450		MANIFOLD,EXHAUST			
BPE8-13-450	1				
13-456		STUD			
230o-13-456	3				
13-462		GASKET,EX.MANIFOLD			
BP05-13-460	1	NON ASBESTOS			

1320 FUEL SYSTEM

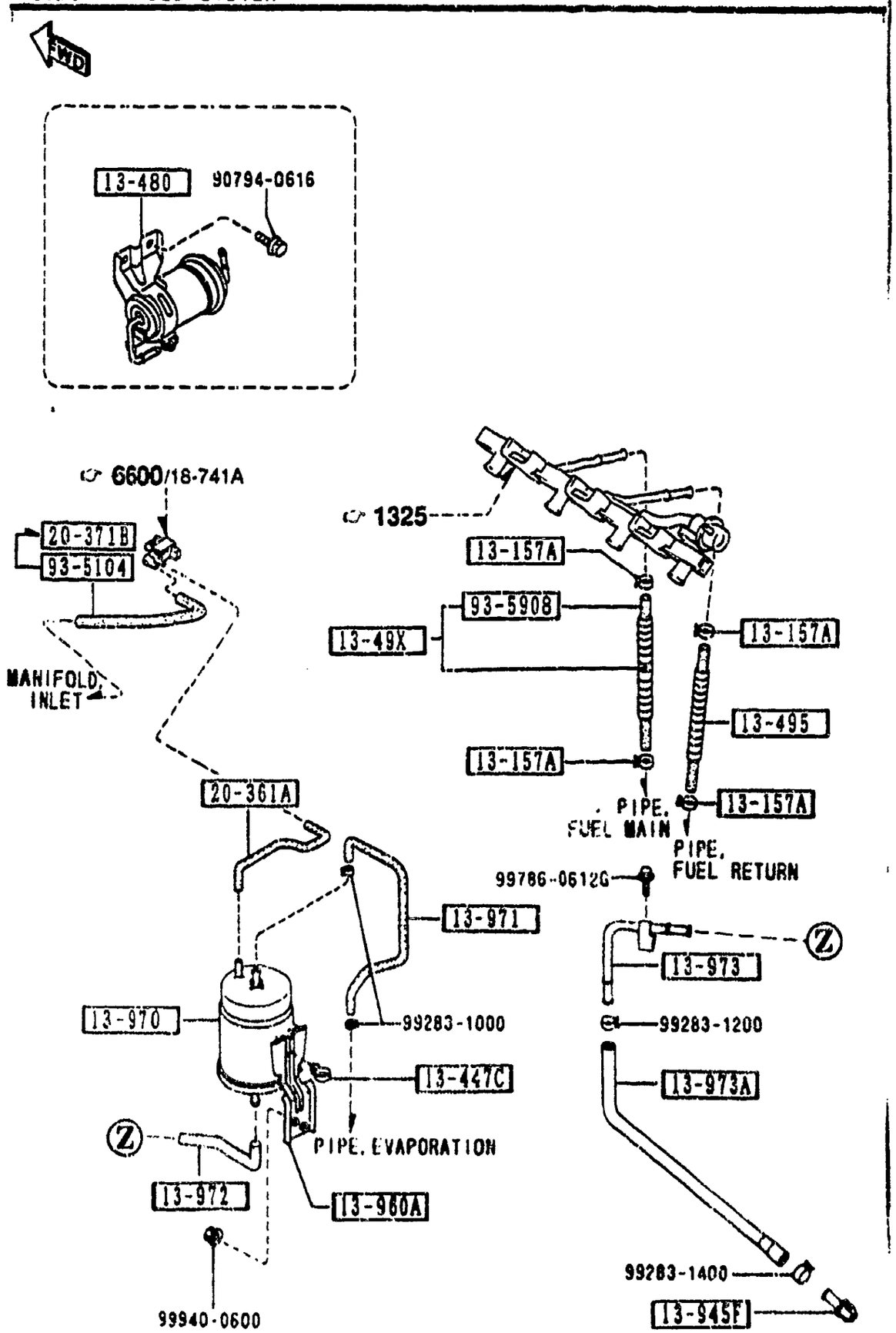

PART NO.	QTY	MODEL/RESTRICTION	MODEL/RESTRICTION	MODEL/RESTRICTION	FROM-TO
13-157A 8574-13-157	4	CLIP			
13-447C B61P-13-447	1	CLAMP,HOSE			
13-480 B61P-20-490	1	FILTER,FUEL			
13-49X BPE8-13-49X	1	HOSE,FUEL-EGI			
13-495 BPE8-13-495	1	HOSE,FUEL			
13-945F JE16-13-298	1	CONNECTOR			
13-960A B61P-13-960	1	BRACKET,CANISTER			
13-970 JE16-13-970A	1	CANISTER			
13-971 B6CA-13-971	1	HOSE,VENTILATION			
13-972 B6CA-13-972	1	HOSE,EVAPORATION			
13-973 B61P-13-97VA	1	HOSE,DRAIN			
13-973A B61P-13-973A	1	HOSE,EVAPORATION			
20-361A B61P-20-361	1	TUBE,VACUUM			
20-371B BPE8-20-371	1	TUBE,VACUUM			3A01-

3A01 NA3***-505179

1320 FUEL SYSTEM

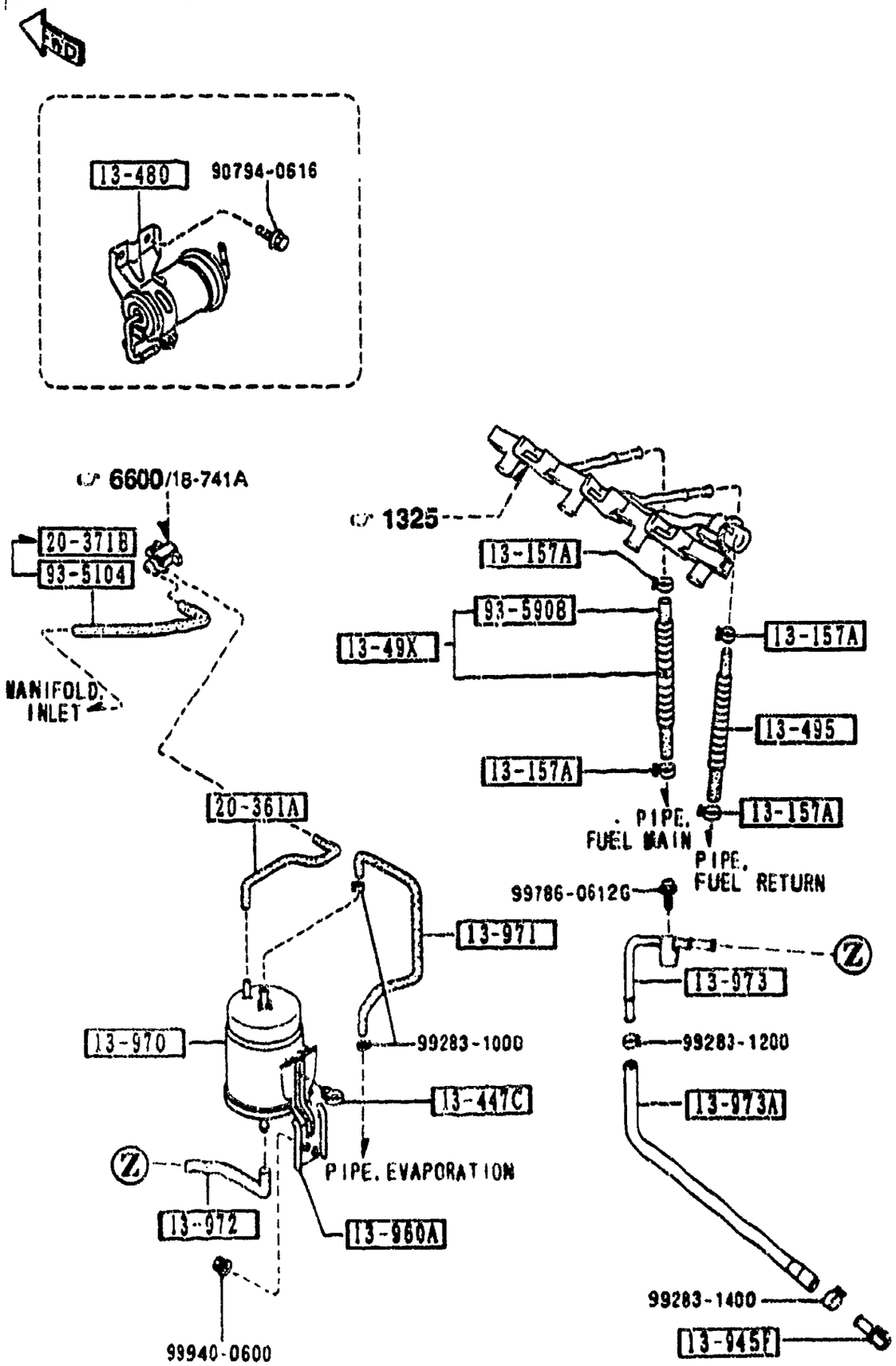

PART NO.	QTY	MODEL/RESTRICTION	MODEL/RESTRICTION	MODEL/RESTRICTION	FROM-TO
93-5104		HOSE			
99351-04999	1				-3A01
93-5908		HOSE			
99359-0834	1				

3A01 NA3###-505179

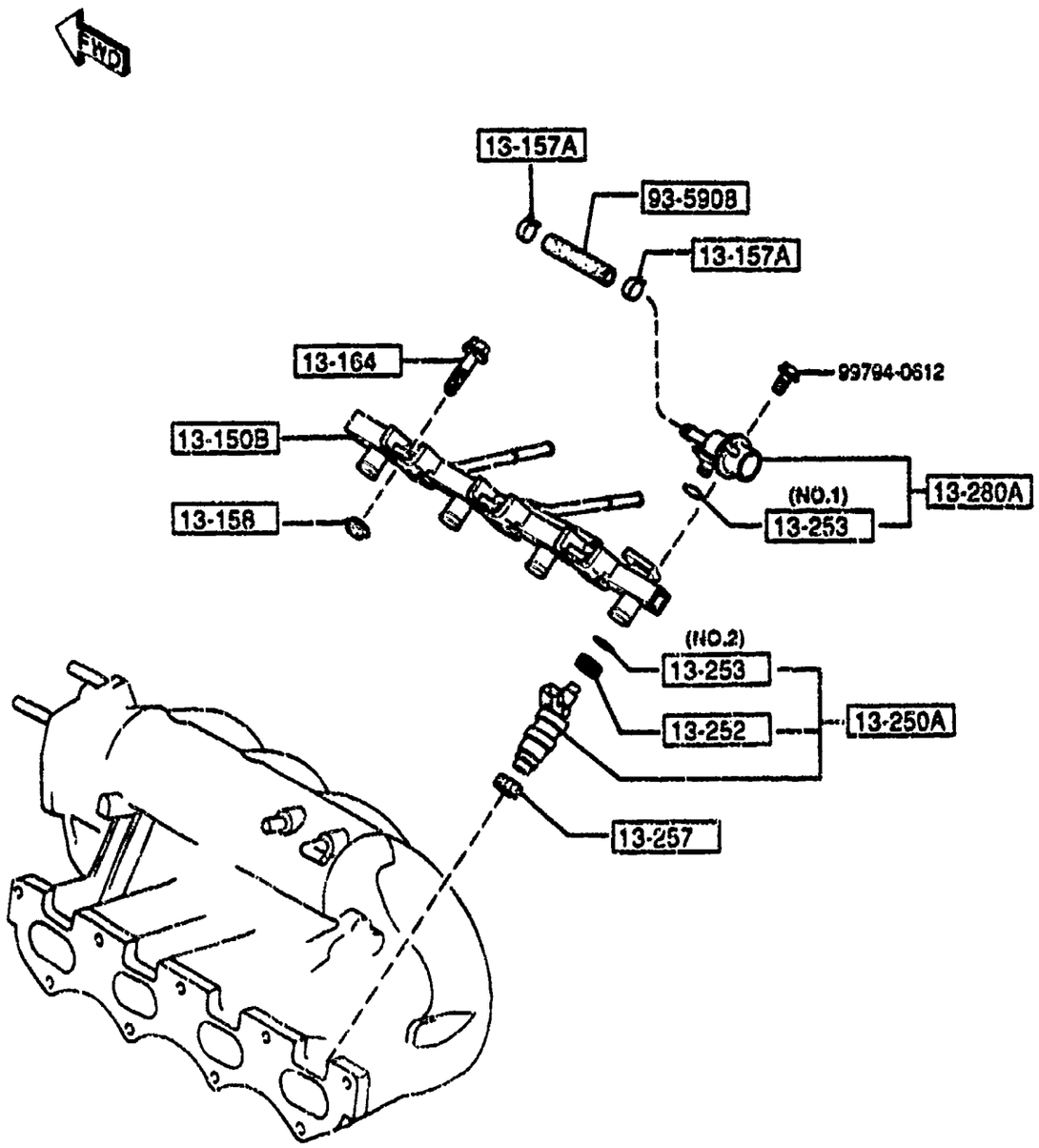

1325 -1 * FUEL DISTRIBUTOR

PART NO.	QTY	MODEL/RESTRICTION	MODEL/RESTRICTION	MODEL/RESTRICTION	FROM-TO
13-150B BPE8-13-150	1	DISTRIBUTOR,FUEL			
13-157A 8574-13-157	2	CLIP			
13-158 B675-13-158	3	INSULATOR,FUEL DIST.			
13-164 F8B3-13-164	3	BOLT,FUEL DISTRIBUTOR			
13-250A BP06-13-250	4	INJECTION,FUEL-M.P.ELECT.			
13-252 8574-13-252	4	GROMMET			
13-253 G601-13-253	1	RING,'O' (ILLUST. NO.1)			
8574-13-253	4	(ILLUST. NO.2)			
13-257 JE06-13-257	4	INSULATOR,INJECTION			
13-280A KJ01-13-280	1	PRESSURE RG.,FUEL			
93-5908 99359-0809	1	HOSE			

1330 AIR CLEANER

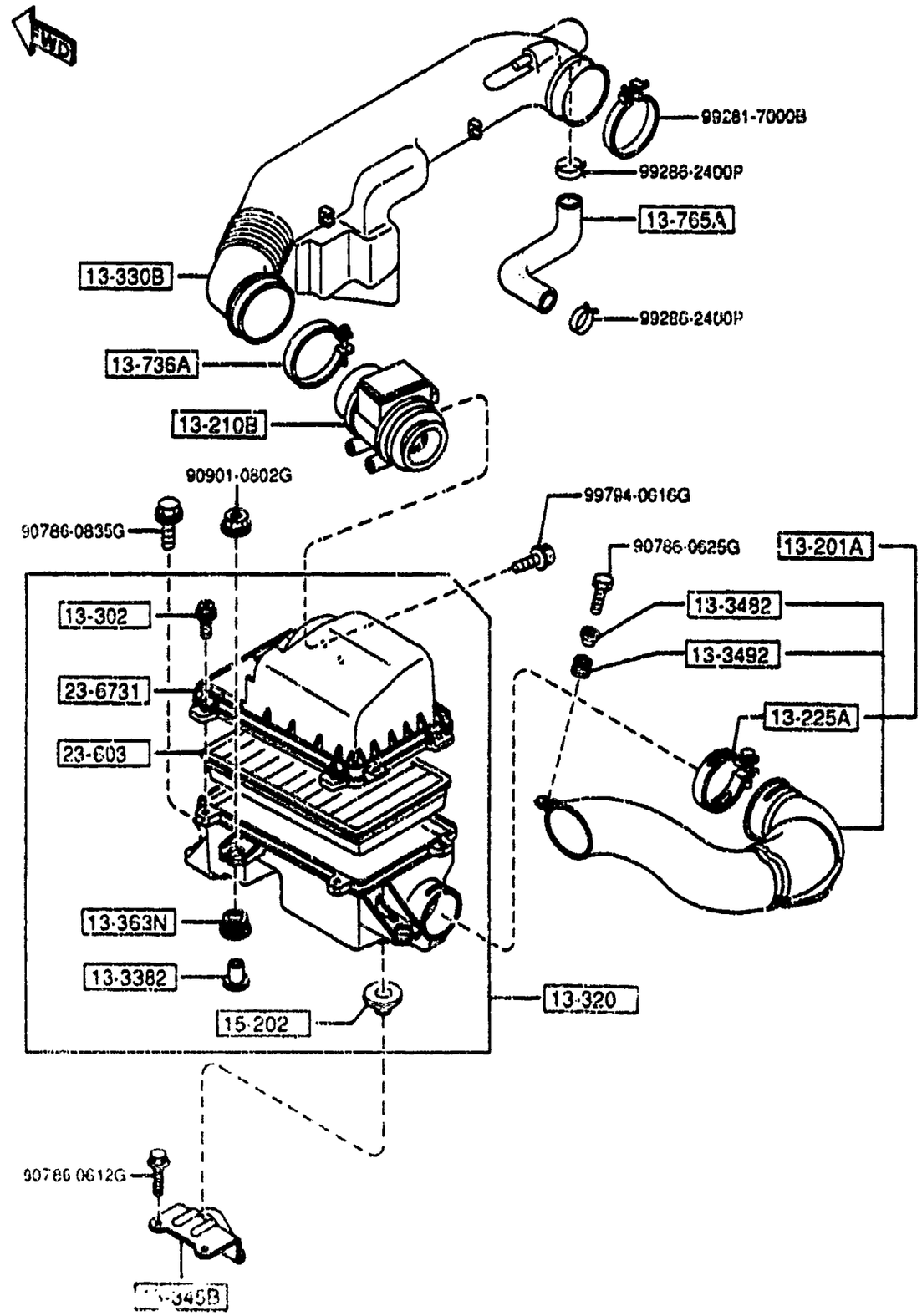

PART NO.	QTY	MODEL/RESTRICTION	MODEL/RESTRICTION	MODEL/RESTRICTION	FROM-TO
13-201A BPE8-13-200	1	DUCT,FRESH AIR			
13-210B B6BF-13-215	1	SENSOR,AIR FLOW			
13-225A B61P-13-735	1	CLAMP,HOSE			
13-302 F201-13-302A	4	BOLT,AIR CLEANER			
13-320 BPE8-13-320	1	HOUSING,AIR CLEANER			
13-330B BPE8-13-331A	1	PIPE,AIR INTAKE			
13-3382 FE51-13-329	3	SPACER			
13-345B B61P-20-211	1	BRACKET,AIR CLEANER			
13-3482 SLA1-13-321	1	SPACER,AIR INT.PIPE			
13-3492 S501-13-349	1	INSULATOR			
13-363N FE51-13-363	3	RUBBER,MOUNTING			
13-736A KL01-13-735	1	CLAMP,HOSE-A.I.P./A. CLNR			
13-765A BPE8-13-765A	1	HOSE,AIR			
15-202 B61P-13-Z66	1	RUBBER,MOUNT			

1330 AIR CLEANER

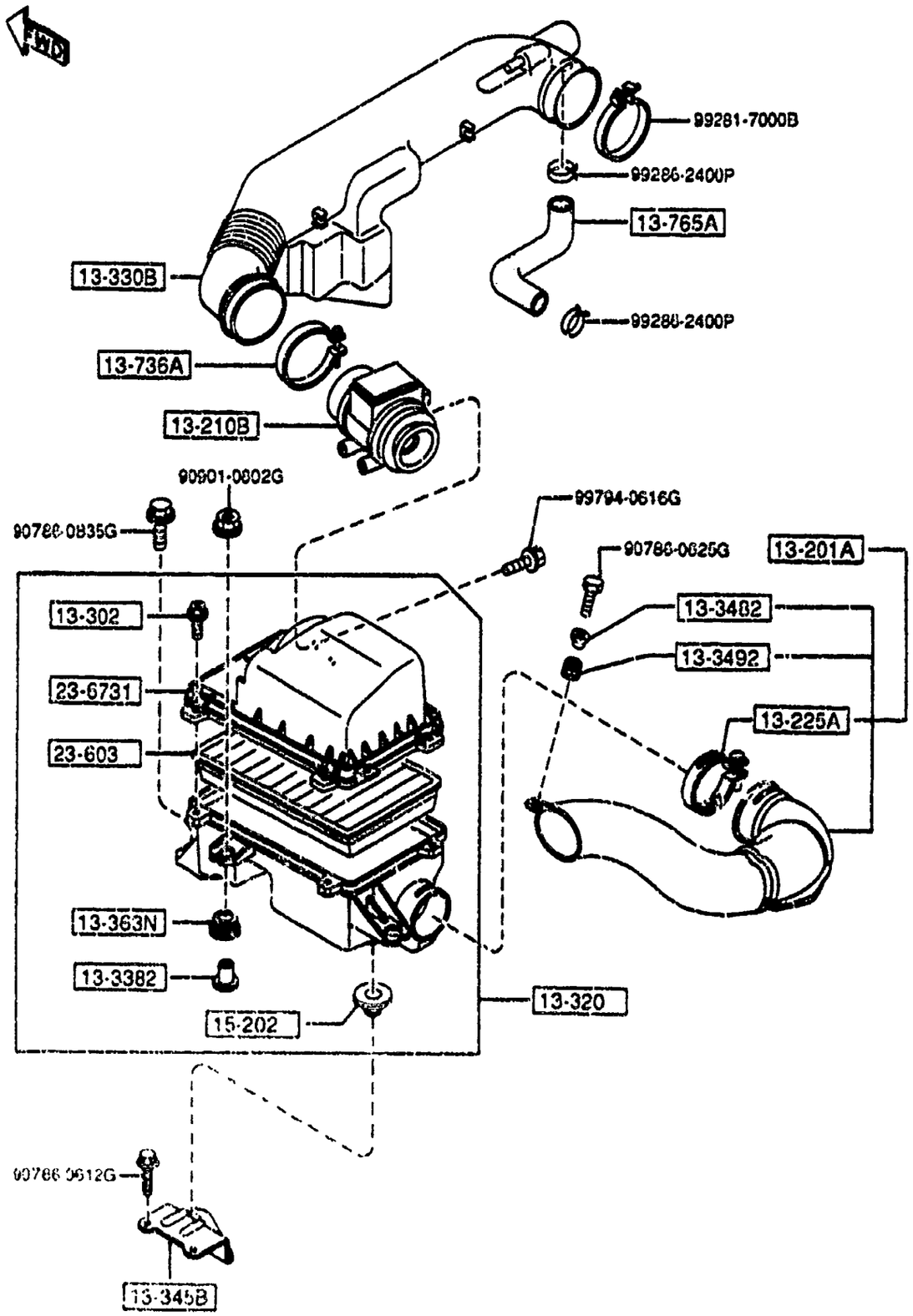

PART NO.	QTY	MODEL/RESTRICTION	MODEL/RESTRICTION	MODEL/RESTRICTION	FROM-TO
23-603		ELEMENT,AIR CLEANER			
B6S7-13-Z40	1				
23-6731		COVER,AIR CLEANER			
8PE8-13-Z01	1				

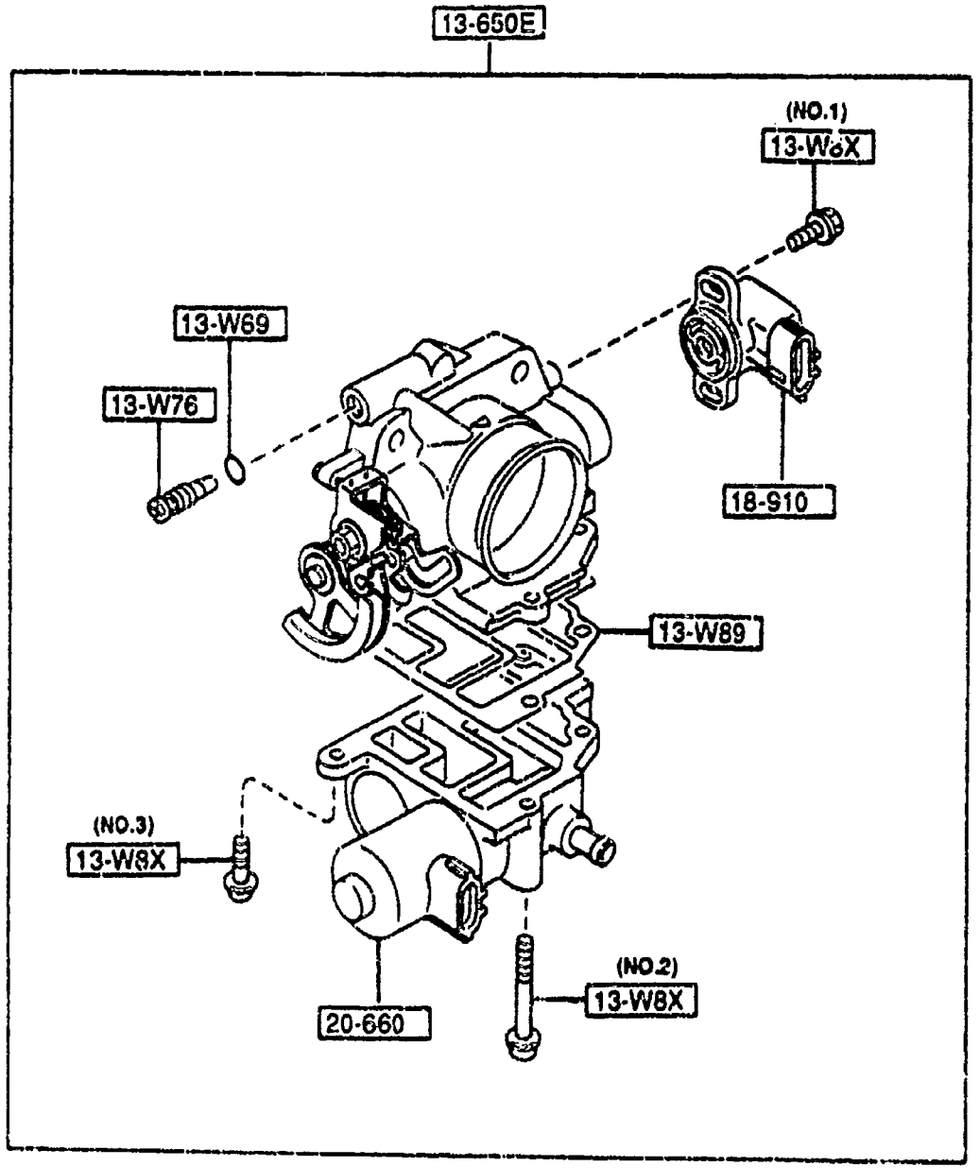

1364 -1 * THROTTLE BODY

PART NO.	QTY	MODEL/RESTRICTION	MODEL/RESTRICTION	MODEL/RESTRICTION	FROM-TO
13-W69		RING,'O'			
K801-13-W69	1				
13-W76		SCREW,ID.ADJUST-TH. BODY			
K801-13-W76	1				
13-W8X		SCREW & WASHER SET			
B551-13-W8X	2	(ILLUST. NO.1)			
B6BF-13-W8X	2	(ILLUST. NO.2)			
K802-13-W8X	2	(ILLUST. NO.3)			
13-W89		GASKET,THERMO			
B6BF-13-W89	1				
13-650E		BODY,THROTTLE			
BPE6-13-640A	1				
18-910		SENSOR,THROTTLE-CARB			
JE50-18-911	1				
20-660		VALVE,IDLE AIR CONTROL			
B6BF-20-660	1				

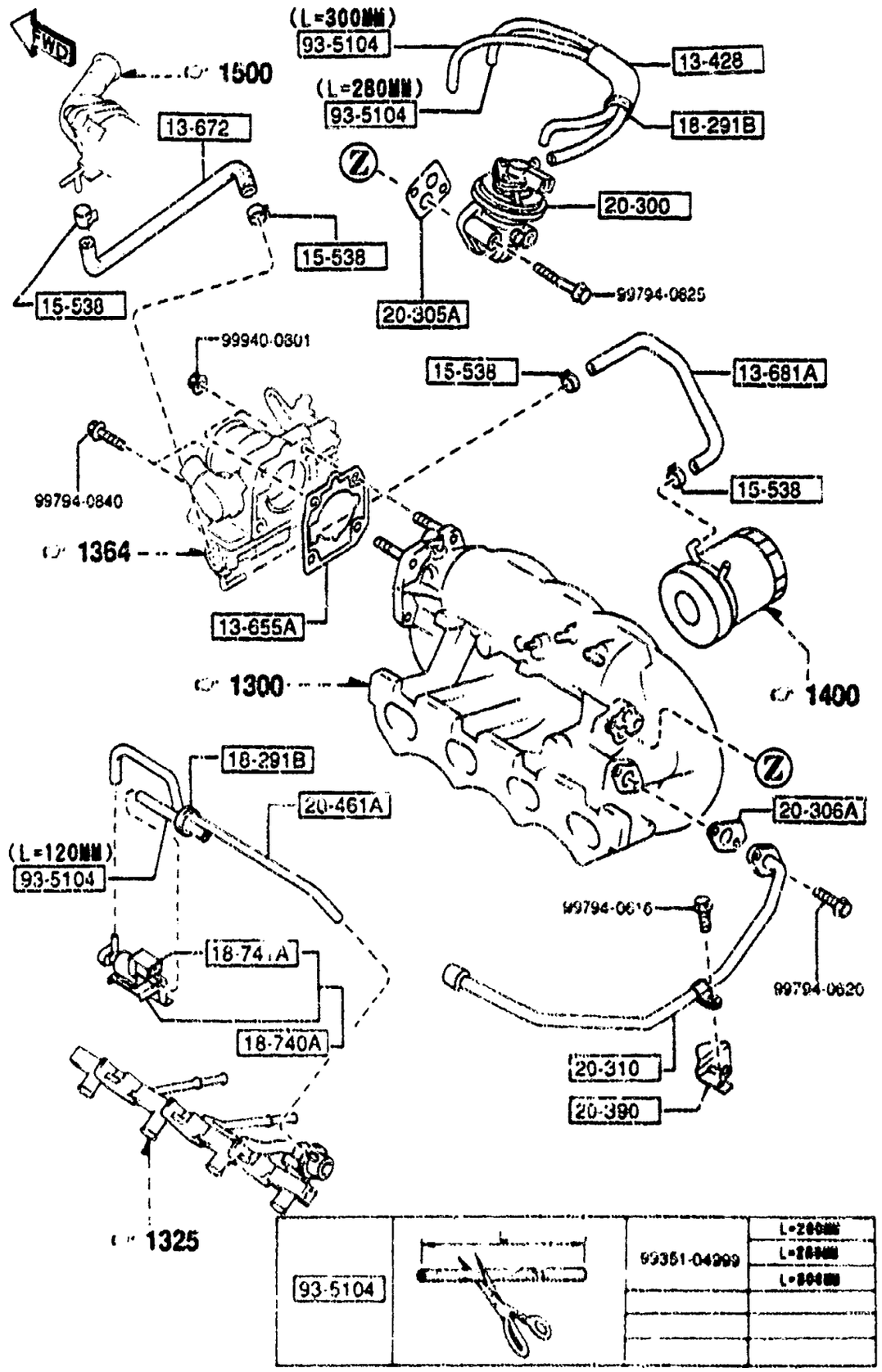

PART NO.	QTY	MODEL/RESTRICTION	MODEL/RESTRICTION	MODEL/RESTRICTION	FROM-TO
13-428		PROTECTOR			
B367-13-428	1				
13-655A		GASKET			
B6BF-13-655	1				
13-672		HOSE,WATER			
BPE8-13-682	1				
13-681A		HOSE,WATER			
BPE8-13-681	1				
15-538		CLAMP,WATER HOSE			
JF02-15-538	4				
18-291B		CLAMP,HOSE			
HE21-18-291	2				
18-740A		VALVE,SOLENOID			
B69N-18-740	1				
18-741A		VALVE,THREE WAY			
F505-18-741	1				
20-300		VALVE,E.G.R.			
Z505-20-300	1				
20-305A		GASKET,E.G.R. VALVE			
JE27-20-305	1				
20-306A		GASKET			
JE06-20-306	1				
20-310		PIPE,E.G.R.			
BPE8-20-310	1				
20-390		BRACKET,E.G.R.PIPE			
BPE8-20-390	1				
20-461A		TUBE,VACUUM			
BPE8-20-461	1				

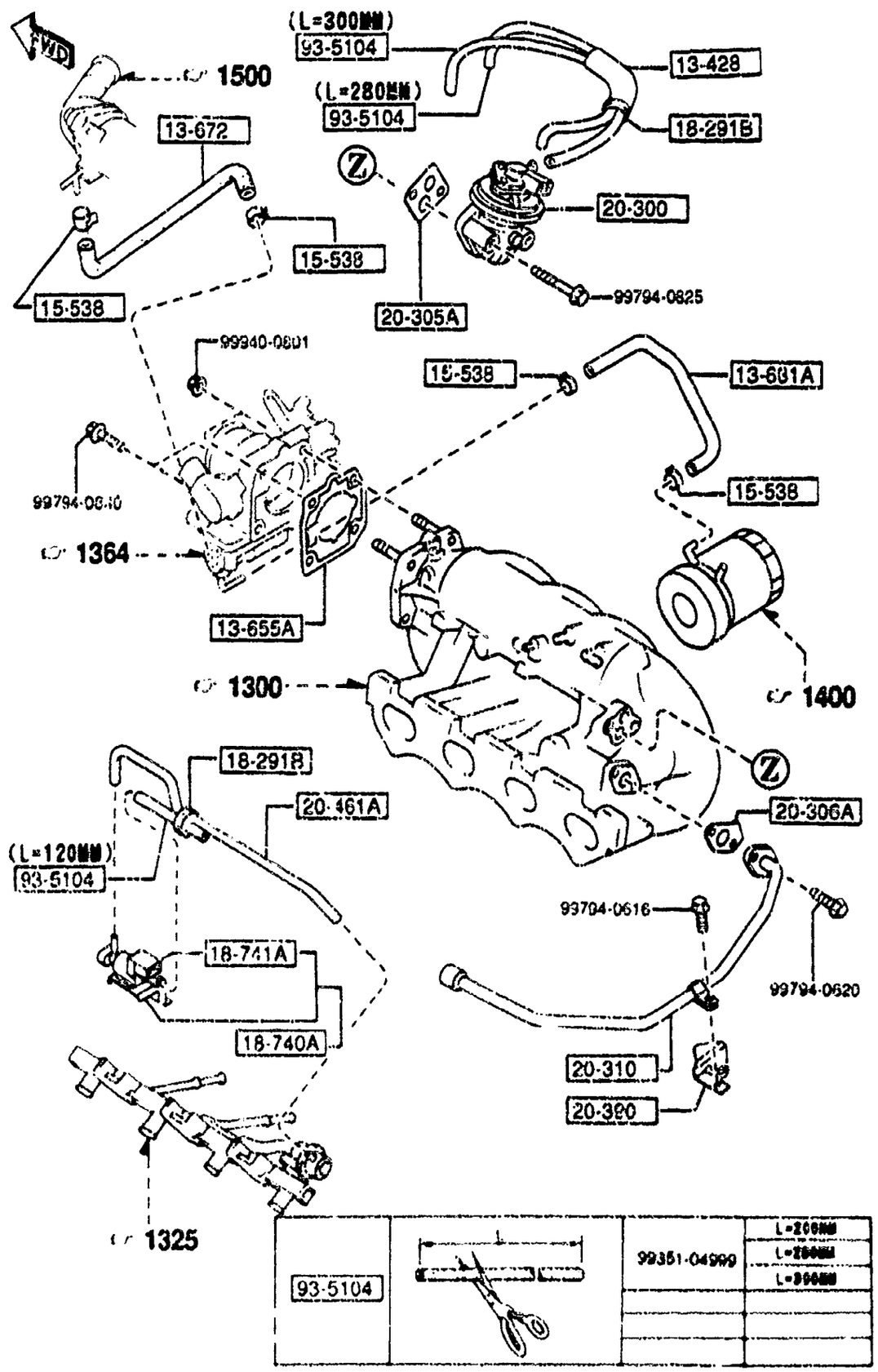

1370 -2 * EMISSION CONTROL SYSTEM (INLET SIDE)

PART NO.	QTY	MODEL/RESTRICTION	MODEL/RESTRICTION	MODEL/RESTRICTION	FROM-TO
93-5104		HOSE			
99351-04999	1				

1400 OIL PUMP & FILTER

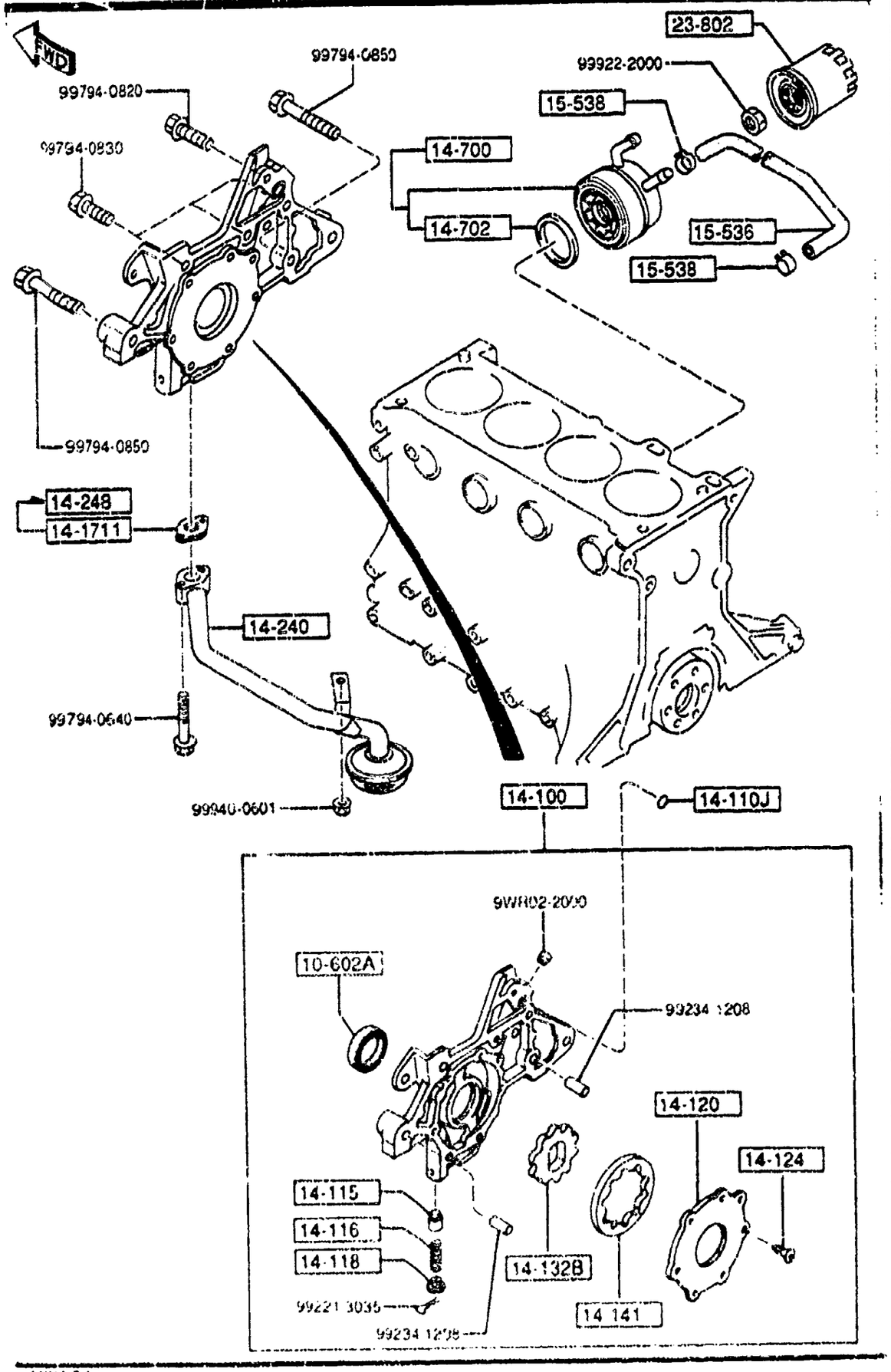

PART NO.	QTY	MODEL/RESTRICTION	MODEL/RESTRICTION	MODEL/RESTRICTION	FROM-TO
10-602A		SEAL,OIL			
B3C7-10-602A	1	NON ASBESTOS			
14-100		PUMP,OIL			
B6BF-14-100A AN(B6S8-14-100E)	1				-3901
B6S8-14-100E A (B6S8-14-100F)	1				3901-4310
B6S8-14-100F	1				4310-
14-110J		RING,'O'			
FE1H-14-122A	1				
14-115		PLUNGER,CONTROL			
0221-14-115	1				-4301
JF01-14-115	1				4301-
14-116		SPRING,PRESSURE			
0324-14-116B	1				
14-118		SHEET,SPRING			
0222-14-118	1				
14-120		COVER,OIL PUMP			
B6BF-14-121	1				
14-124		SCREW,OIL PUMP COVER			
FE1H-14-124	7				
14-132B		GEAR,INNER			
B6S7-14-132	1				
14-141		GEAR,OUTER			
B6S7-14-141	1				
14-1711		GASKET,OIL STRAINER			
B621-14-248	1	NON ASBESTOS			-3901
14-240		STRAINER,OIL			
BPE8-14-240					

3901 NAS###-502360
4301 NAS###-516672
4310 NAS###-511568

1400 OIL PUMP & FILTER

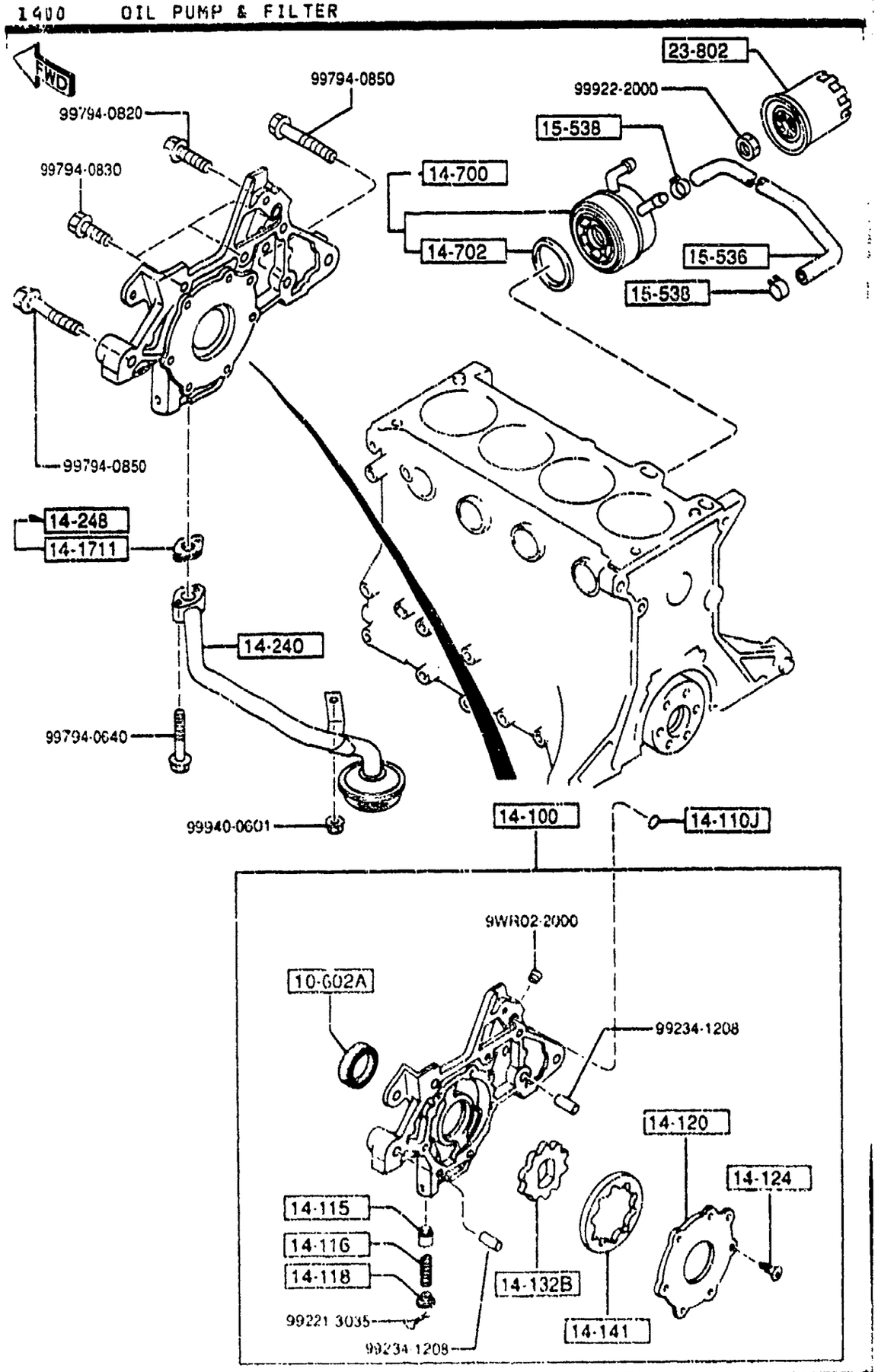

PART NO.	QTY	MODEL/RESTRICTION	MODEL/RESTRICTION	MODEL/RESTRICTION	FROM-TO
14-248		GASKET,OIL STRAINER			
B6BF-14-248	1				3901-
14-700		COOLER,OIL			
BPE8-14-700	1				
14-702		GASKET			
KL01-14-702A	1				
15-536		HOSE,WATER-OIL COOLER IN.			
BPE8-15-536	1				
15-538		CLAMP,WATER HOSE			
JF02-15-538	2				
23-802		CARTRIDGE,OIL FILTER			
B6Y1-14-302	1	TOKYO ROKI			

3901 NA3***-502360

1500 COOLING SYSTEM

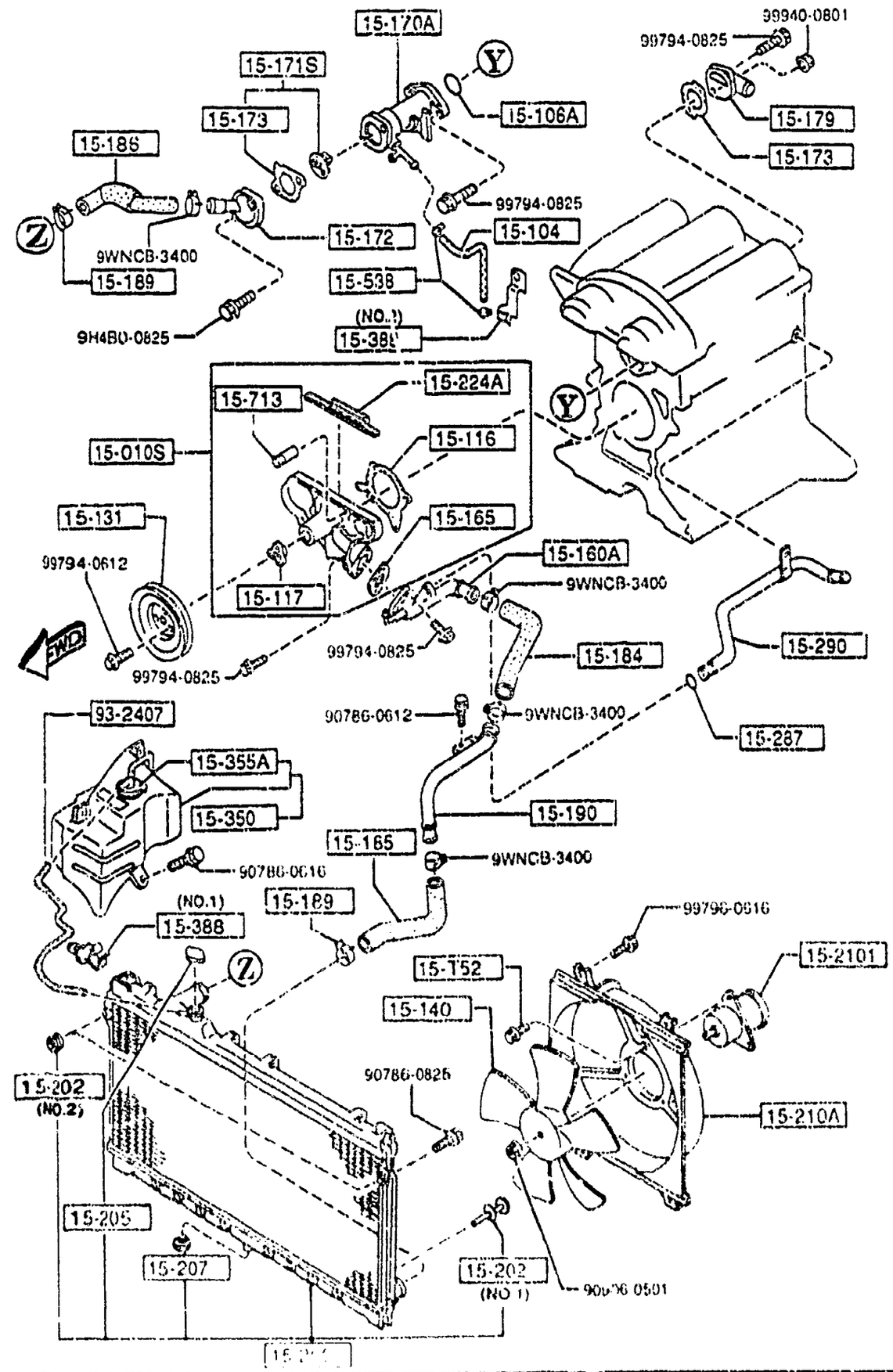

PART NO.	QTY	MODEL/RESTRICTION	MODEL/RESTRICTION	MODEL/RESTRICTION	FROM-TO
15-T52		SCREW,MOTOR·ELECTRIC FAN			
B6S8-15-T52	3				
15-010S		PUMP SET,WATER			
BABB-15-010	1				
15-104		HOSE,WATER BY-PASS			
B61P-15-261A	1				
15-106A		RING,'O'-WATER PUMP			
B61P-15-106	1				
15-116		GASKET,WATER PUMP			
B6BF-15-116	1				
15-117		BOSS,W.PUMP PULLEY			
E301-15-117	1				
15-131		PULLEY,WATER PUMP			
B3C7-15-131	1				
15-140		FAN,COOLING			
D61P-15-140A	1	(MT)			
B64J-15-140	1	CALSONIC (AT)			
15-160A		INLET,WATER PUMP			
B61P-15-160	1				
15-165		GASKET,W.PUMP INLET			
B621-15-165	1	NON ASBESTOS			
15-170A		COVER,THERMO			
BPE8-15-170A	1				
15-171S		THERMOSTAT SET			
BABB-15-171	1				
15-172		COVER,THERMOSTAT			
BPE3-15-172	1				

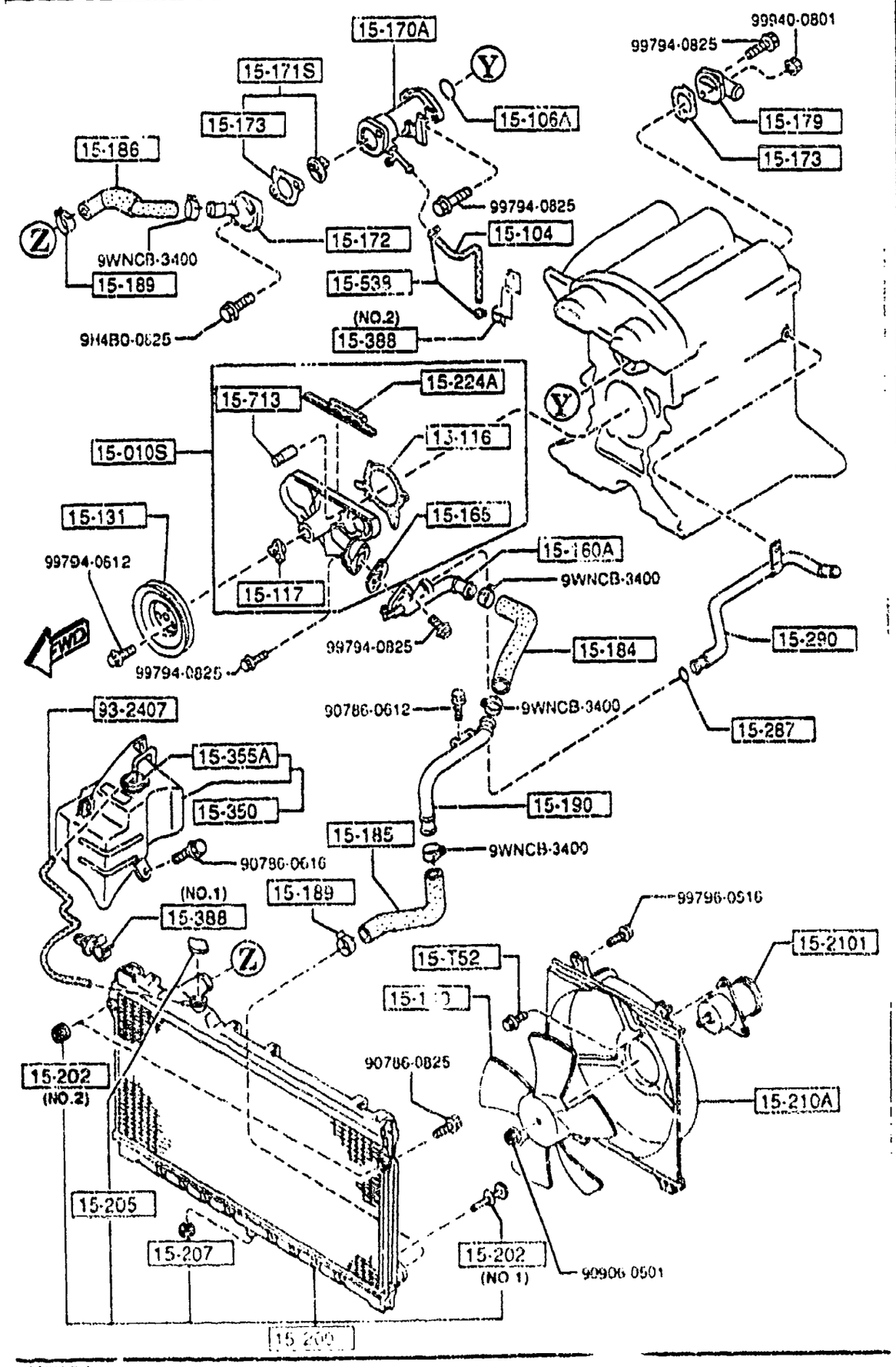

PART NO.	QTY	MODEL/RESTRICTION	MODEL/RESTRICTION	MODEL/RESTRICTION	FROM-TO
15-173		GASKET, THERMOSTAT COVER			
B621-15-173	2	NON ASBESTOS			
15-179		OUTLET, WATER			
BPE8-15-179	1				
15-184		HOSE, WATER			
B61P-15-184	1				
15-185		HOSE, WATER			
BPE8-15-185	1				
15-186		HOSE, WATER			
BPE8-15-186	1				
15-189		CLAMP, HOSE			
B366-15-182	2				
15-190		PIPE, WATER			
B61P-15-190	1				
15-200		RADIATOR			
BPE8-15-200	1	(MT)			
BPE9-15-200	1	(AT)			
15-202		RUBBER, MOUNT			
*B61P-15-202	2	(ILLUST. NO.1)			4509-
*N326-15-202	2	(ILLUST. NO.2)			4509-
15-205		CAP, RADIATOR			
D316-15-205	1	CALSONIC			
15-207		COCK, DRAIN			
NF01-15-203	1	CALSONIC			
15-210A		COWLING, RADIATOR			
B61P-15-210B	1				

4509 NA3***-510031

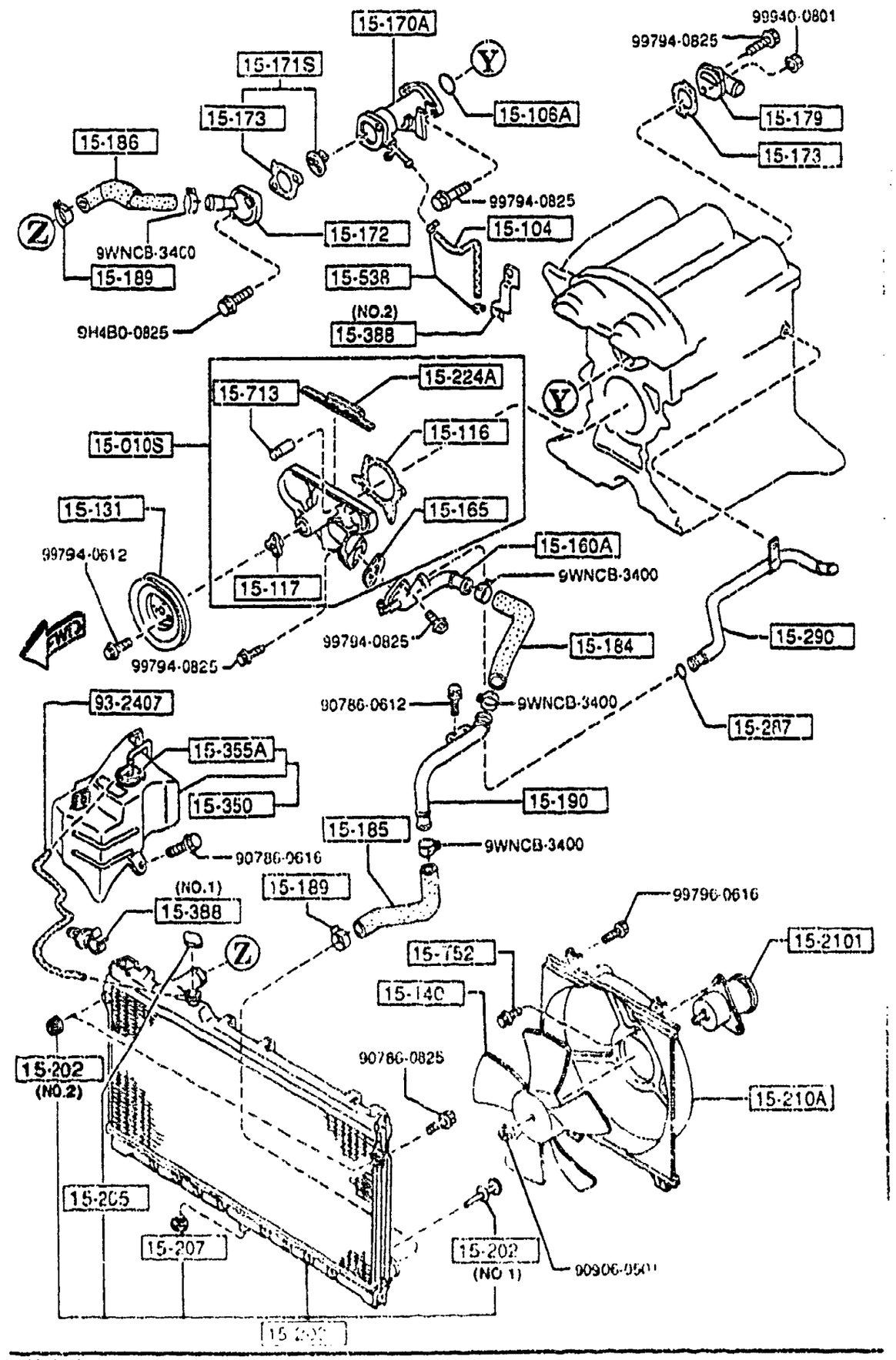

PART NO.	QTY	MODEL/RESTRICTION	MODEL/RESTRICTION	MODEL/RESTRICTION	FROM-TO
15-2101		FAN DRIVE			
B61P-15-150B	1	(MT)			
B64J-15-150A	1	(AT)			
15-224A		RUBBER,SEAL			
B660-10-543B	1				
15-287		RING,'O'-WATER BYPAS S			
E301-15-287	1				
15-290		PIPE,BYPASS			
BPE8-15-290	1				
15-350		TANK,SUB-RADIATOR			
B61P-15-350D	1				
15-355A		CAP,SUB TANK			
B61P-15-355A	1				
15-388		CLIP,HOSE-SUB T.& WA TER H			
F201-15-388A	1	(ILLUST. NO.1)			
B61P-15-547	1	(ILLUST. NO.2)			
15-538		CLAMP,WATER HOSE			
JF02-15-538	2				
15-713		SET PIN,SPRING			
F801-15-713	1				
93-2407		HOSE,WATER			
99324-07610	1				

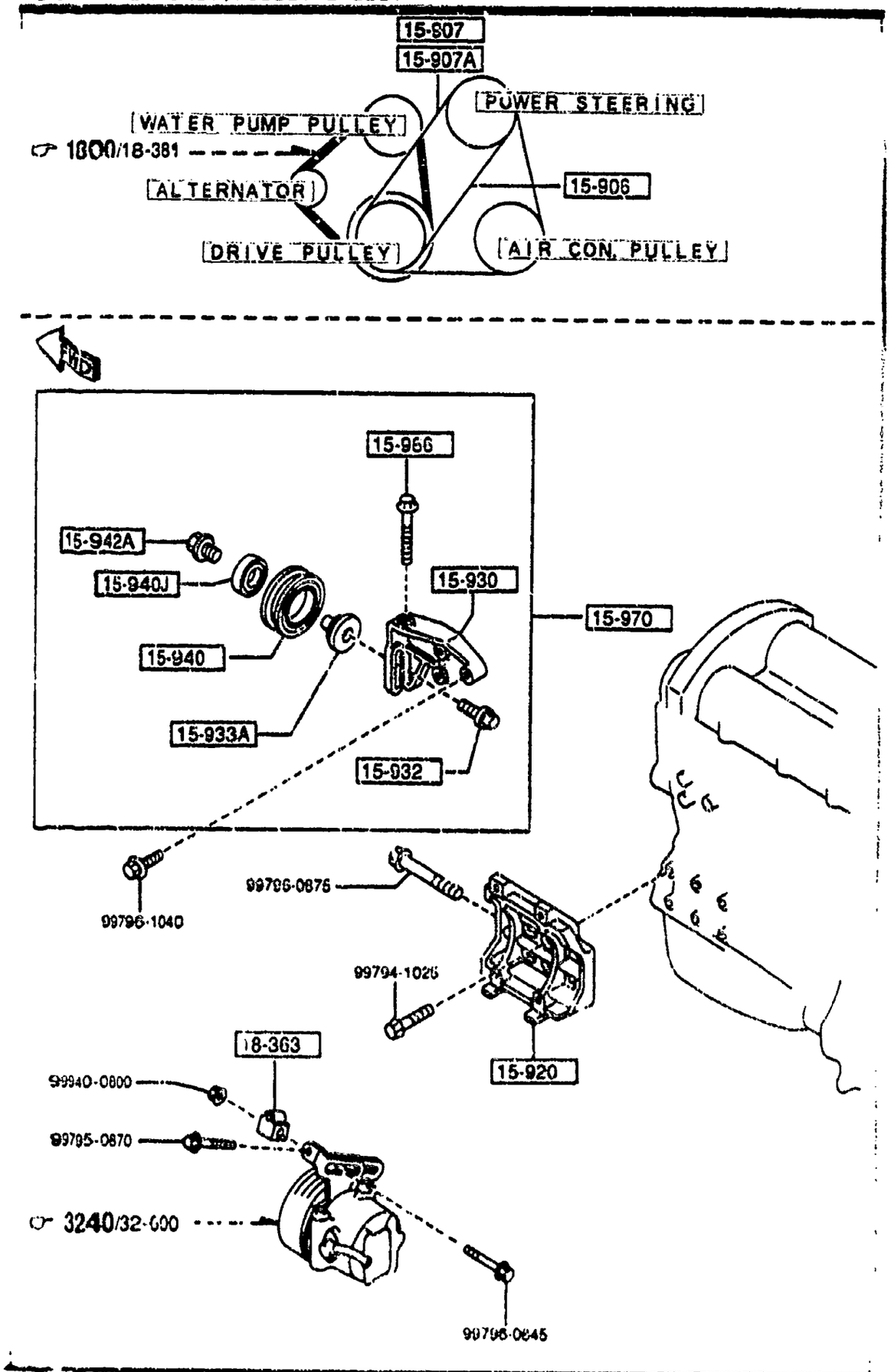

PART NO.	QTY	MODEL/RESTRICTION	MODEL/RESTRICTION	MODEL/RESTRICTION	FROM-TO
15-906		BELT'V'			
B61P-15-907A	1	L=855 4PK RIB.BELT (W/O AIR CON.) (W/POWER STEERING)			
15-907		BELT'V'			
BPF3-15-909	1	(A) (W/AIR CON.) (W/POWER STEERING)			
15-907A		BELT'V'			
B3C7-15-907C	1	RIB-ACE 4PK848 (W/AIR CON.) (W/POWER STEERING)			
15-920		BRACKET,COMPRESSOR			
BPE8-15-810A	1	(A) (W/AIR CON.)			
15-930		BRACKET,IDLE PULLEY			
BP01-15-951	1	(A) (W/AIR CON.) (W/POWER STEERING)			
15-932		SHAFT,PULLEY			
B631-15-932	1	(A) (W/AIR CON.) (W/POWER STEERING)			
15-933A		COLLAR			
BP01-15-933	1	(A) (W/AIR CON.) (W/POWER STEERING)			
15-940		PULLEY,IDLE			
BP01-15-940	1	(A) (W/AIR CON.) (W/POWER STEERING)			
15-940J		BEARING			
99606-83020	1	(W/AIR CON.) (W/O POWER STEERING)			
15-942A		COLLAR			
E564-15-942	1	(A) (W/AIR CON.) (W/O POWER STEERING)			

1580 BRACKET,PULLEY & BELT

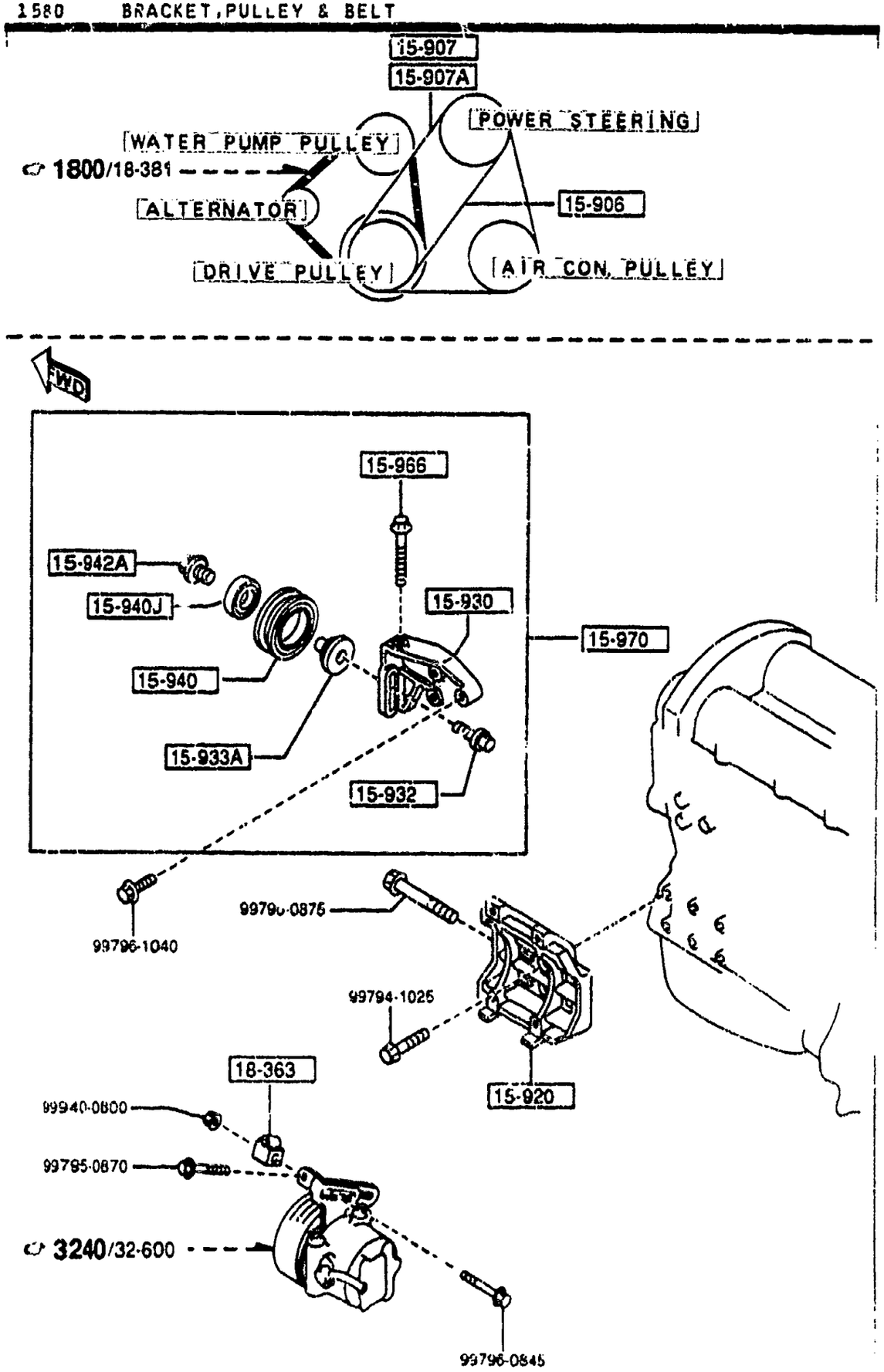

PART NO.	QTY	MODEL/RESTRICTION	MODEL/RESTRICTION	MODEL/RESTRICTION	FROM-TO
15-966		BOLT,ADJUST			
E564-15-934	1	(A) (W/AIR CON.) (W/O POWER STEERING)			
15-970		PULLEY,IDLE			
BP01-15-930	1	(A) (W/AIR CON.) (W/O POWER STEERING)			
18-363		SPACER,STRAP			
FP02-18-363	1	(W/O AIR CON.) (W/POWER STEERING)			

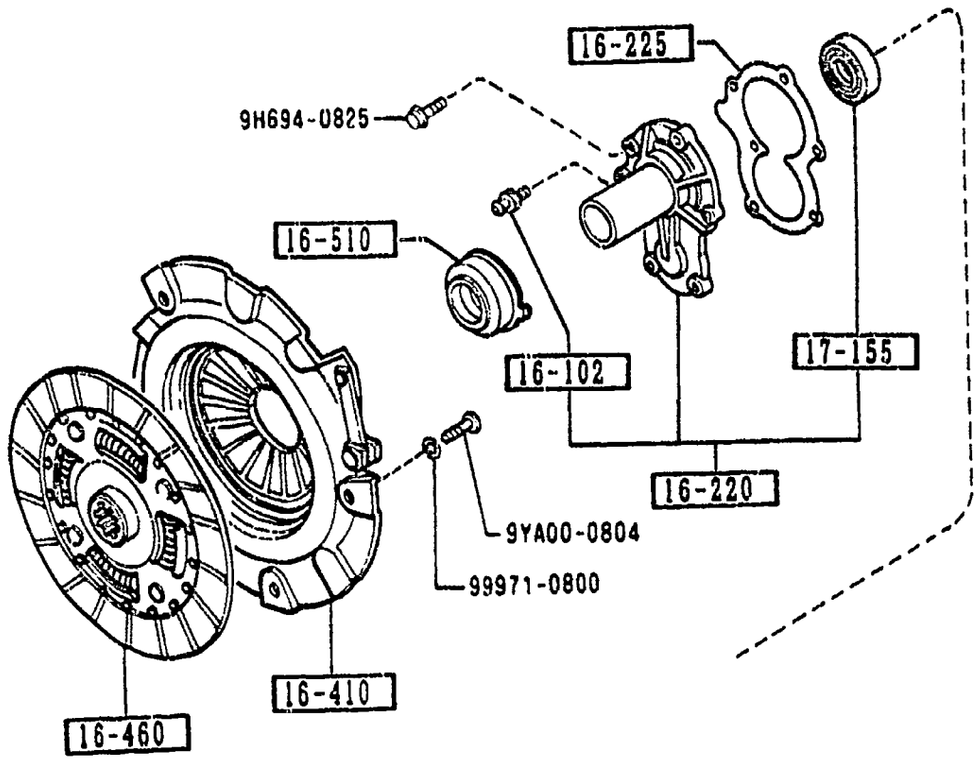

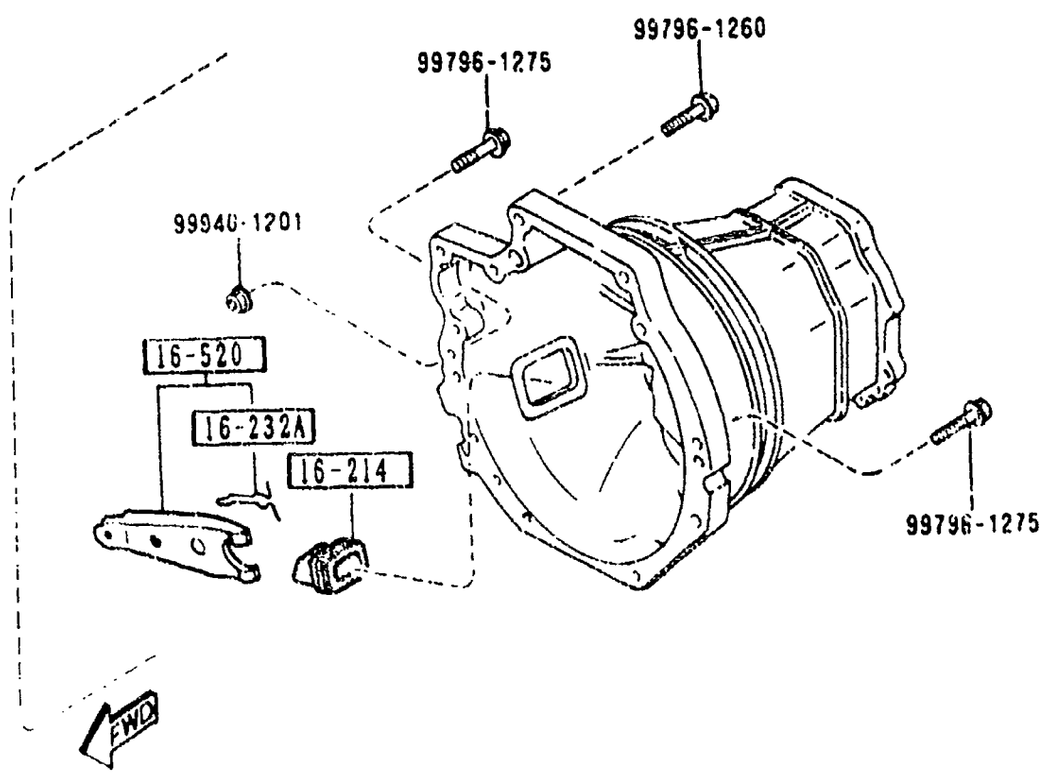

PART NO.	QTY	MODEL/RESTRICTION	MODEL/RESTRICTION	MODEL/RESTRICTION	FROM-TO
16-102		PIN,PIVOT-CLUTCH REL .FORK			
0603-16-102B	1				
16-214		COVER,DUST-CLUTCH FO RK			
FE86-16-214	1				-4301
FE51-16-214	1				4301-
16-220		COVER,FRONT CLUTCH			
B622-16-220	1				
16-225		GASKET,FRONT COVER			
FE50-16-225A	1				
16-232A		SUPPORTER,FORK			
1416-16-232A	1				
16-410		COVER,CLUTCH			
BP07-16-410	1				
16-460		DISC,CLUTCH			
BP07-16-460	1				
16-510		COLLAR,CLUTCH REL.			
B622-16-510	1				
16-520		FORK,CLUTCH RELEASE			
B622-16-520	1				
17-155		SEAL,OIL			
H501-17-103	1				

4301 NA3***-514672

1700 TRANSMISSION CASE (MANUAL)

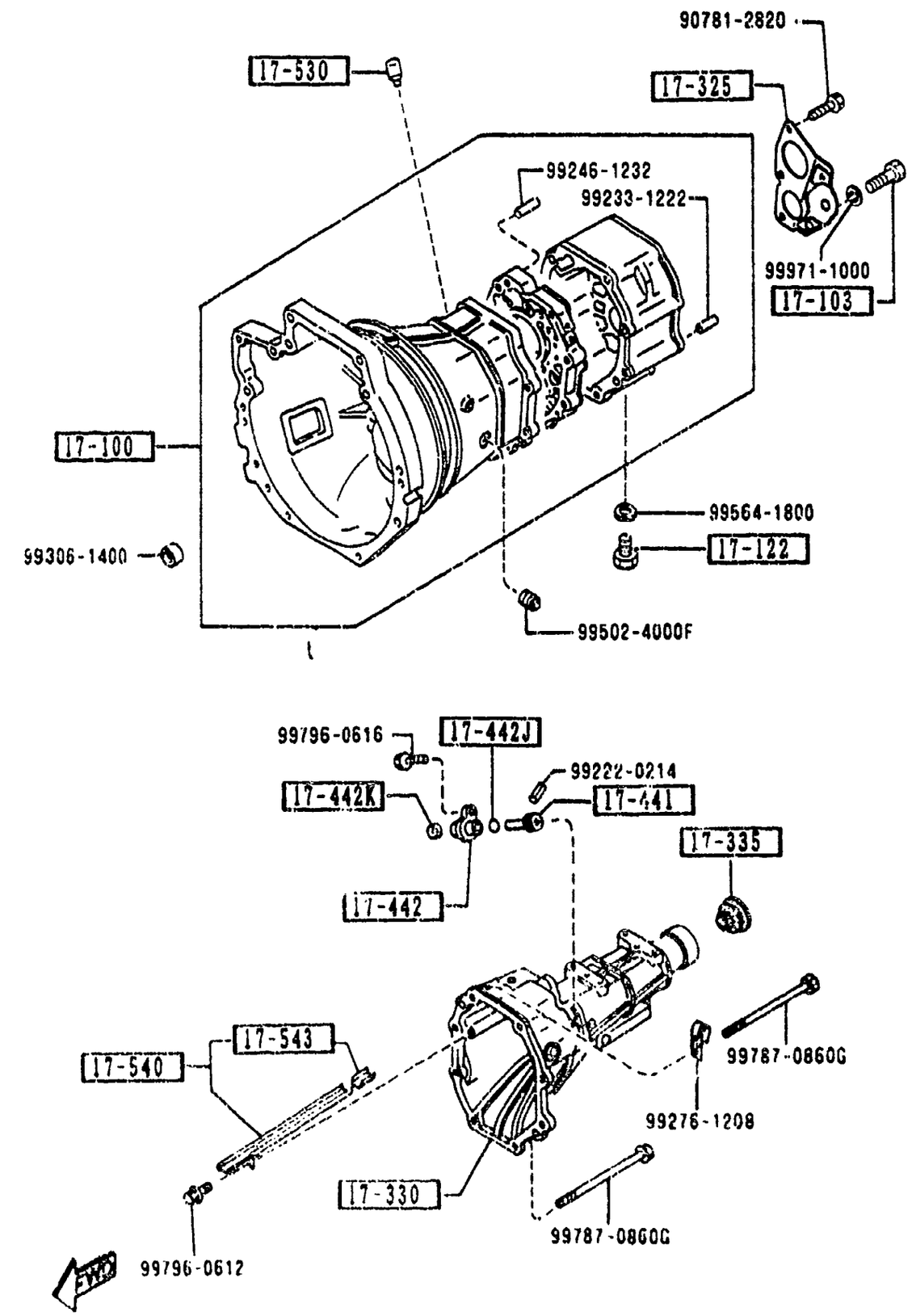

PART NO.	QTY	MODEL/RESTRICTION	MODEL/RESTRICTION	MODEL/RESTRICTION	FROM-TO
17-100		CASE,T/MISSION			
M526-17-100	1				-4301
C (M526-17-100A)					
M526-17-100A	1				4301-
17-103		BOLT			
M501-17-103	2				
17-122		PLUG,MAGNET			
0810-17-121	1				
17-325		COVER,BEARING			
M501-17-370A	1				
17-330		HOUSING,EXTENSION			
M519-17-330	1				
17-335		SEAL,OIL			
M507-17-335A	1				
17-441		GEAR,DRIVEN			
M510-17-441	1	N=22			
17-442		SLEEVE,SPEEDOMETER			
1669-17-442B	1				
17-442J		RING,'O'			
1011-17-443	1				
17-442K		SEAL,OIL			
99586-08166	1				
17-530		BREATHER,AIR-T/MISSI ON			
0884-17-530	1				
17-540		PASS,OIL			
M509-17-540	1				
17-543		RUBBER,SEAL			
M501-17-543A	1				

M526-17-100 4301 NA3***-514672
FE51-16-214
C M526-17-100A

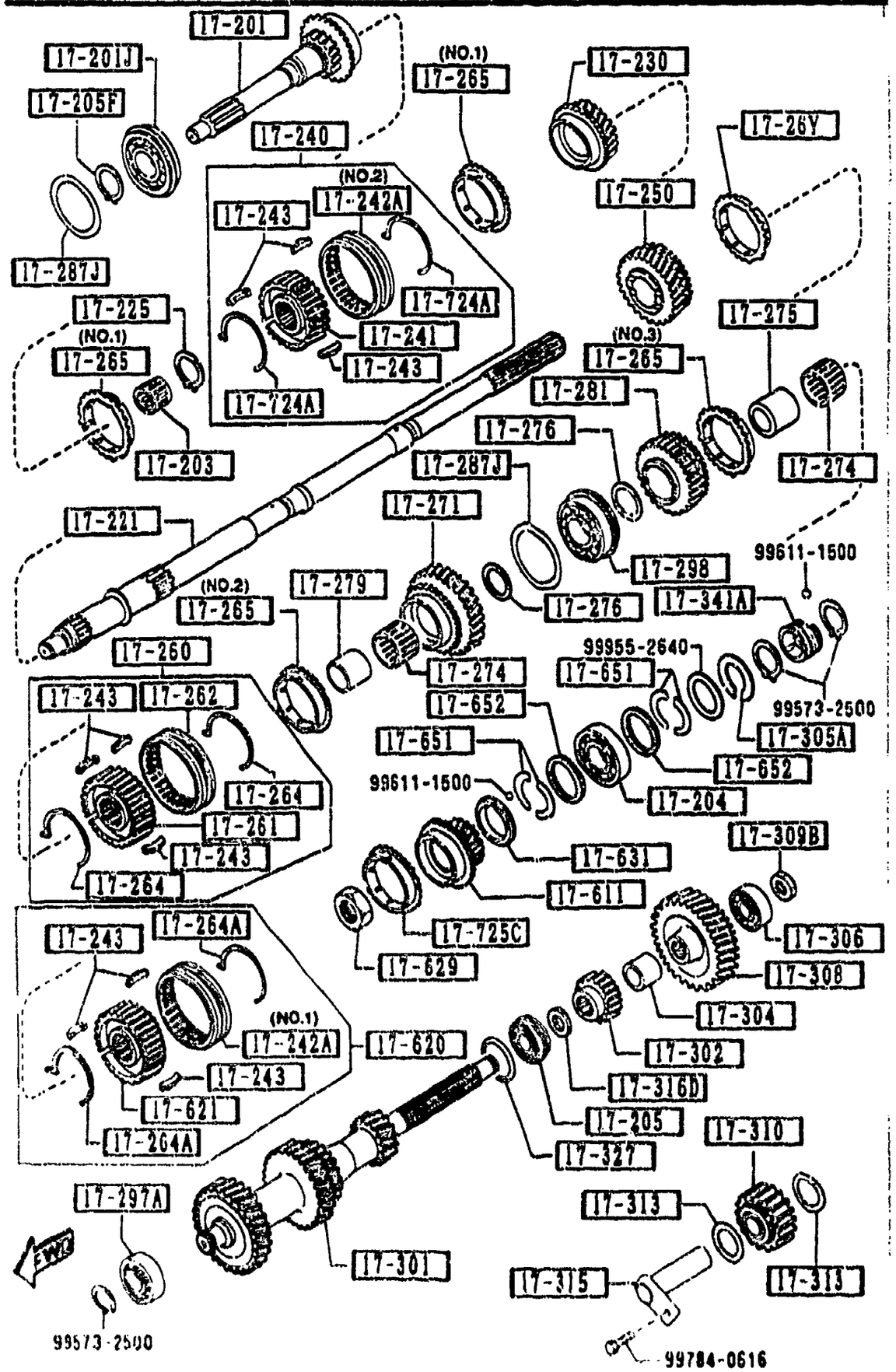

AUNA04

PART NO.	QTY	MODEL/RESTRICTION	MODEL/RESTRICTION	MODEL/RESTRICTION	FROM-TO
17-201		GEAR,MAIN DRIVE			
M516-17-201	1				
17-201J		BEARING,BALL-MAIN DRIVE GEAR			
M502-17-295C	1				
17-203		BEARING,NEEDLE			
M501-17-210A	1				
17-204		BEARING,BALL-MAIN SHAFT			
M503-17-204	1				
17-205		BEARING,ROLLER			
R502-17-306A	1				
17-205F		RING,RETAINING			
M501-17-205	1				
17-221		SHAFT,MAIN			
M505-17-221B	1				
17-225		RING,SNAP			
0317-17-225	1				
17-230		GEAR,3RD			
M513-17-251	1				-4106
AN(M513-17-231B)					
M513-17-231B	1				4106-
17-240		HUB SET,CLUTCH-3RD & 4TH			
M517-17-240	1				
17-241		HUB,CLUTCH			
M501-17-241C	1				
17-242A		SLEEVE,CLUTCH HUB			
F401-17-242A	1	(ILLUST. NO.1)			
M502-17-242	1	(ILLUST. NO.2)			
17-243		KEY,SYNCHRONIZER			
F401-17-243A	9				

4106 NA3MKM-509503

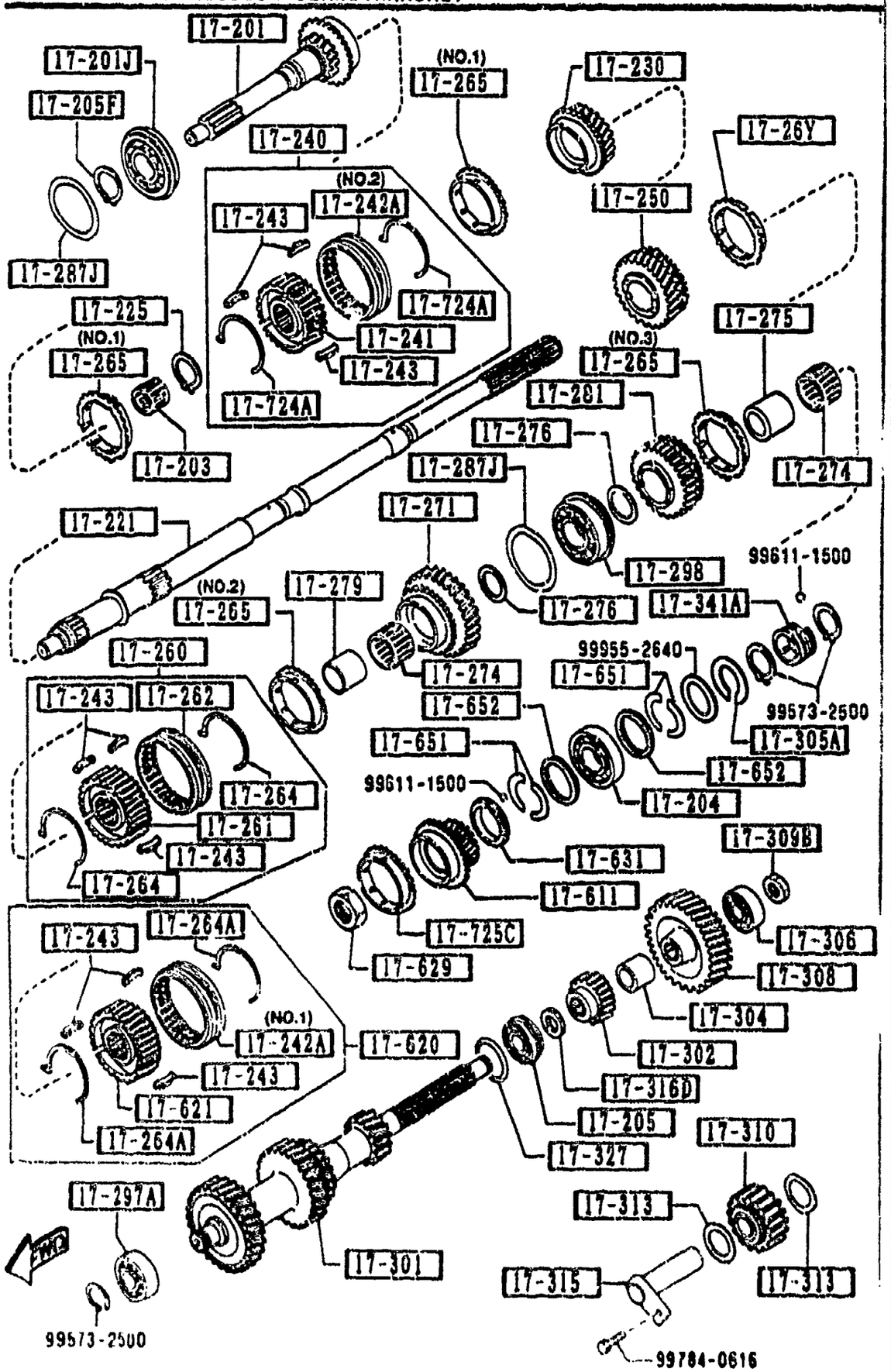

AUNA04

PART NO.	QTY	MODEL/RESTRICTION	MODEL/RESTRICTION	MODEL/RESTRICTION	FROM-TO
17-250		GEAR,2ND			
M520-17-251A	1				
17-26Y		RING,SYNCHRONIZER			
R504-17-26Y	1				
17-260		HUB SET,CLUTCH-1ST & 2ND			
M517-17-260	1				
17-261		HUB,CLUTCH			
M511-17-261	1				
17-262		SLEEVE,CLUTCH HUB			
M505-17-262	1				
17-264		SPRING,SYNCHRO. KEY			
G401-17-264	2				
17-264A		SPRING,SYNCHRONIZER			
F401-17-264A	2				
17-265		RING,SYNCHRONIZER			
G501-17-265A	2	(ILLUST. NO.1)			
M502-17-265C	1	(ILLUST. NO.2)			
M504-17-265A	1	(ILLUST. NO.3)			
17-271		GEAR,1ST			
M516-17-271A	1				
17-274		BEARING,NEEDLE			
4069-17-283A	2				
17-275		RACE,INNER			
4069-17-284E	1				
17-276		WASHER,THRUST			
0259-17-274A	2	T=3MM			
0259-17-276	2	T=2.2MM			
0259-17-277		T=2.7MM			

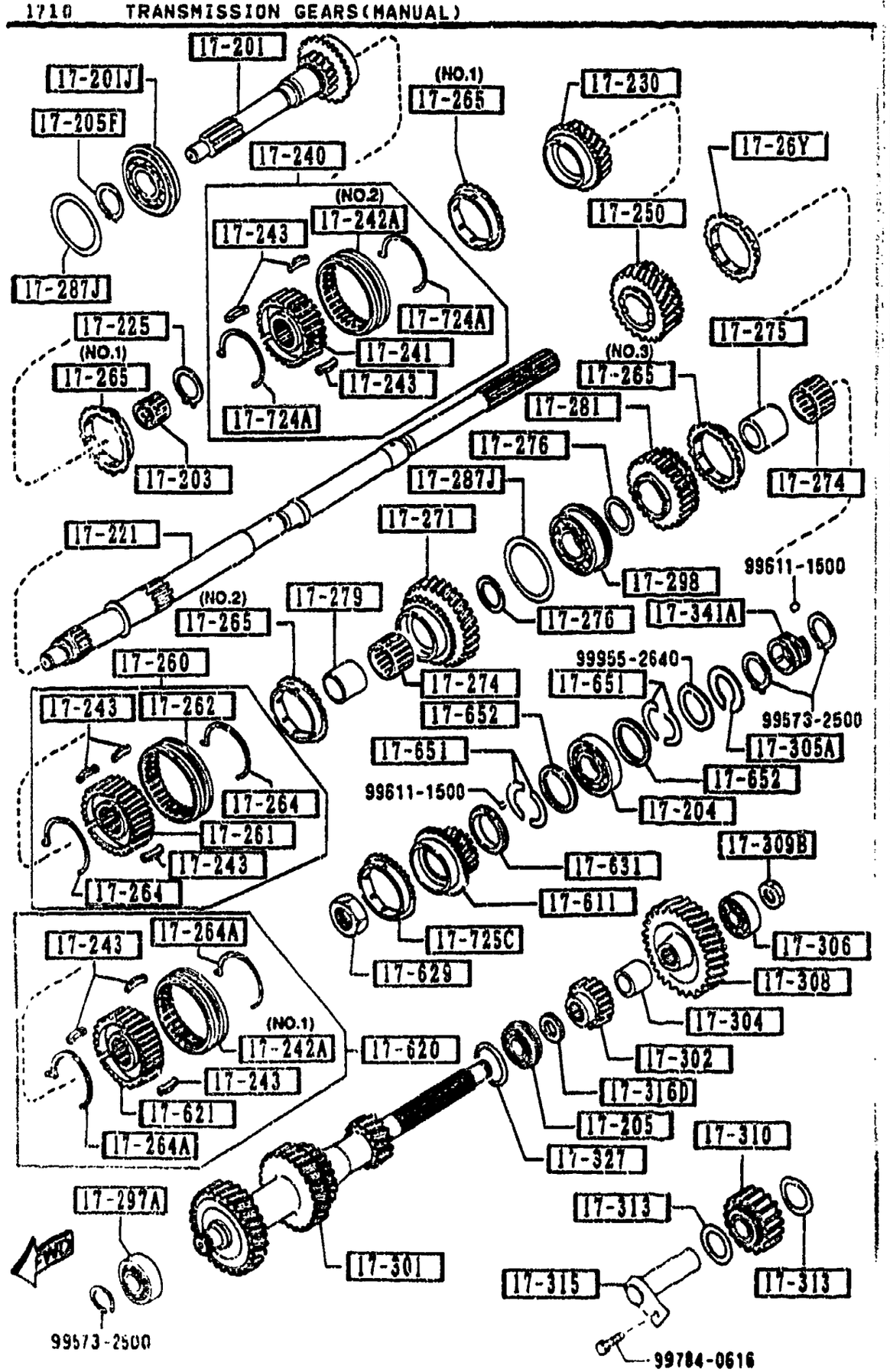

AUNA04

PART NO.	QTY	MODEL/RESTRICTION	MODEL/RESTRICTION	MODEL/RESTRICTION	FROM-TO
CONT'D					
	2				
0259-17-278	2	T=3.2MM			
0259-17-279	2	T=3.7MM			
17-279		SLEEVE,GEAR			
8540-17-275A	1				
17-281		GEAR,REVERSE			
M513-17-281	1				
17-287J		SHIM,ADJUST			
99963-6310	2	T=0.1MM			
99963-6315	1	T=0.15MM			
99963-6330	2	T=0.3MM			
17-297A		BEARING,BALL-COUNTER SHAFT G.			
M502-17-297A	1				
17-298		BEARING			
M502-17-298A	1				
17-301		GEAR,COUNTER SHAFT			
M528-17-301A	1				
17-302		GEAR,COUNTER REVERSE			
M516-17-302	1				
17-304		SPACER			
M504-17-304	1				
17-305A		RING,RETAINING-BALL BEARING			
0839-17-305B	1				
17-306		BEARING,BALL			
M502-17-299A AN(M502-17-299B)	1				-4628
MM502-17-299B	1				4628-

4628 NA3MMM-521168

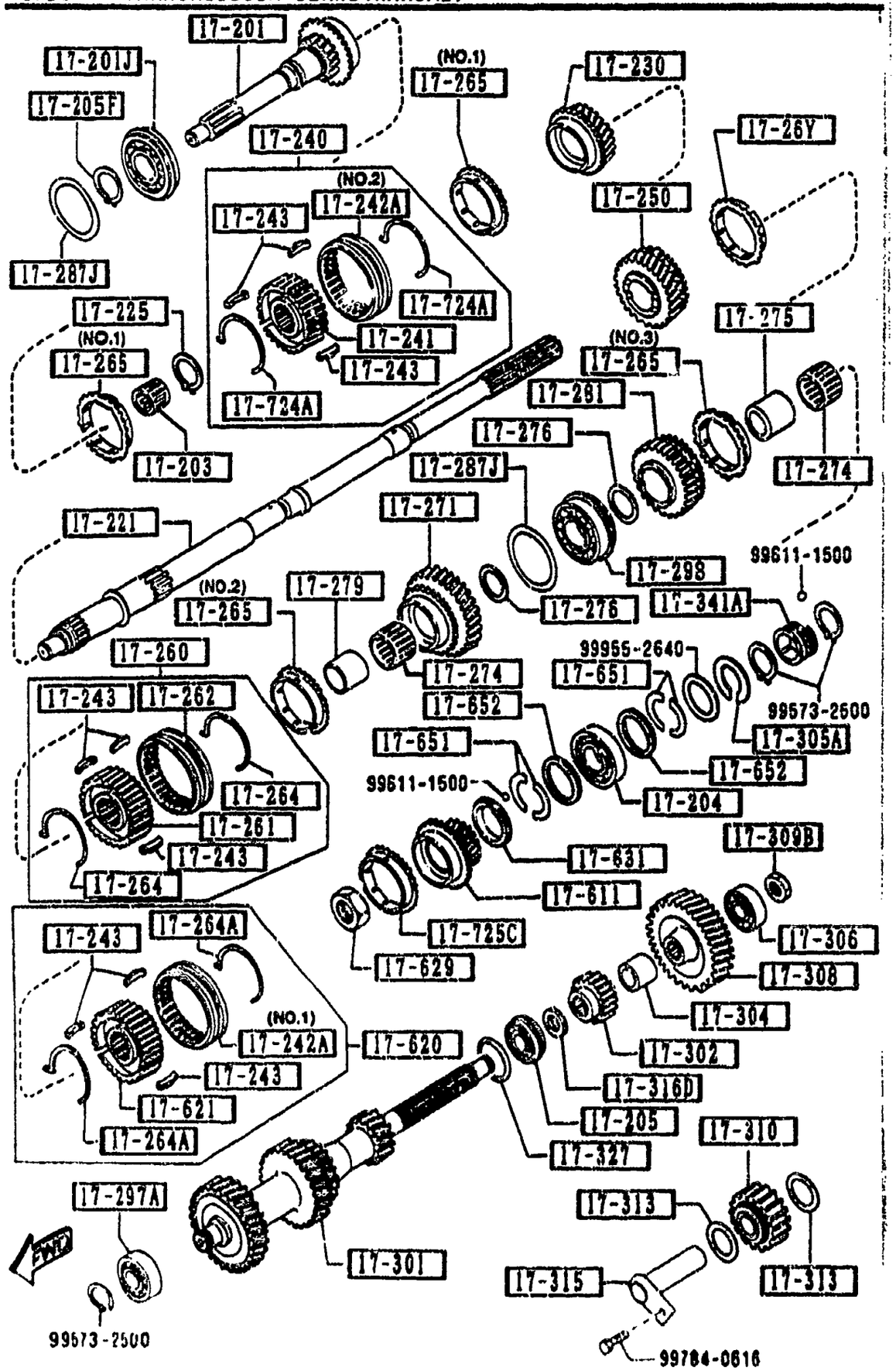

AUNA04

PART NO.	QTY	MODEL/RESTRICTION	MODEL/RESTRICTION	MODEL/RESTRICTION	FROM-TO
17-308		GEAR,COUNTER			
M510-17-308	1				
17-309B		NUT,LOCK-COUNTER SHAFT BR			
M501-17-309	1				
17-310		GEAR,REVERSE IDLE			
M513-17-310	1				
17-313		WASHER,THRUST-REVERSE IDLE G.			
M501-17-313	2	T=2MM			
17-315		SHAFT,REV. IDLE GEAR			
M501-17-140	1				
17-316D		SPACER			
R502-17-316	1				
17-327		SHIM,ADJUST-COUNTER SHAFT GEAR			
0305-17-327	2	T=0.1MM			
0305-17-328	1	T=0.3MM			
17-341A		GEAR,SPEEDO.DRIVE			
M503-17-341	1				
17-611		GEAR,OVER TOP			
M517-17-611	1				
17-620		HUB SET,CLUTCH-O.T. & REV			
M505-17-620	1				
17-621		HUB,CLUTCH			
M505-17-621	1				
17-629		NUT,LOCK-CLUTCH HUB			
8601-17-629	1				
17-631		WASHER,THRUST LOCK-OVER TOP G.			
0884-17-632B		T=6.2MM			

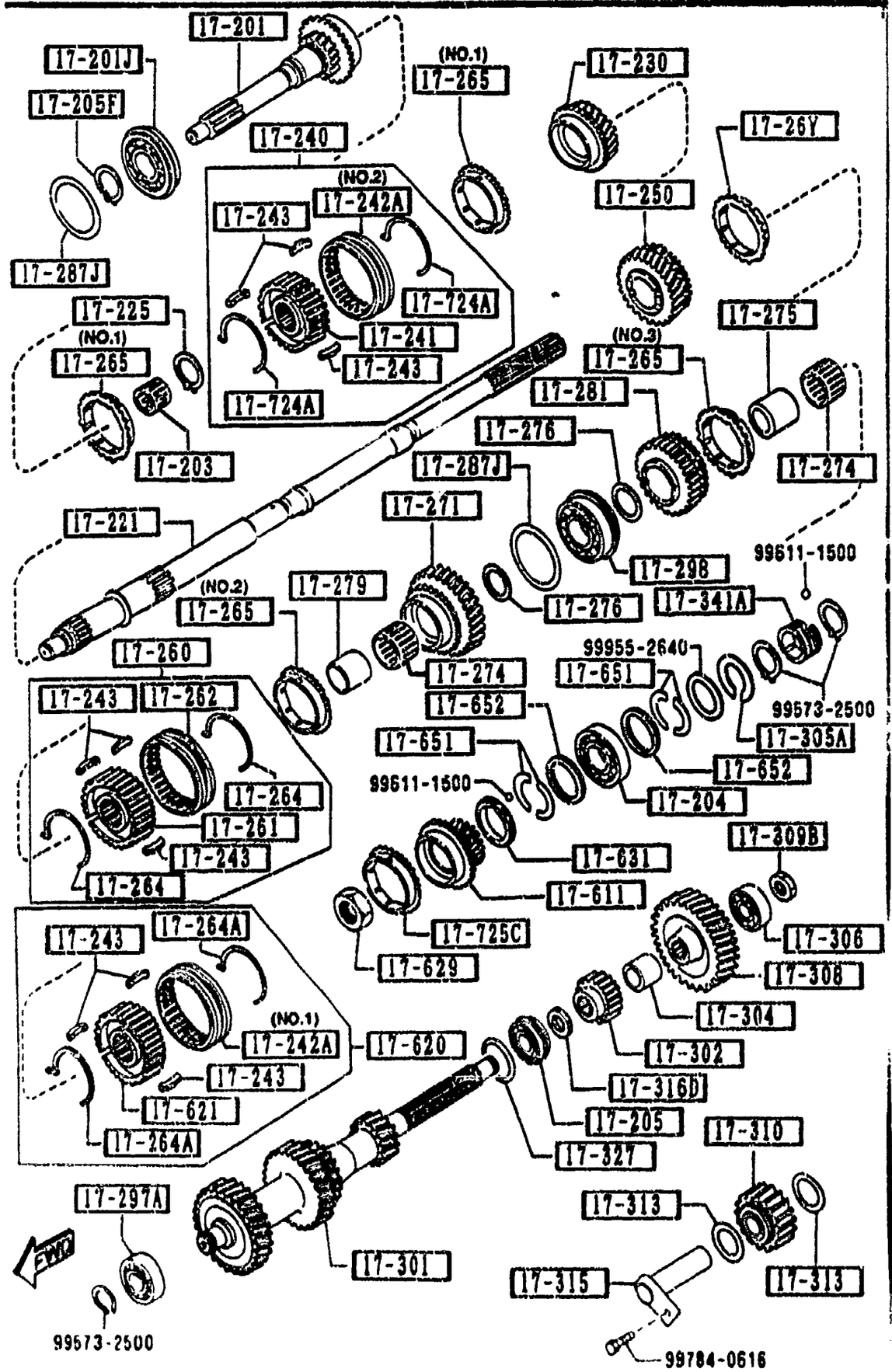

PART NO.	QTY	MODEL/RESTRICTION	MODEL/RESTRICTION	MODEL/RESTRICTION	FROM-TO
CONT'D					
	1				
0884-17-633B	1	T=6.4MM			
0884-17-634B	1	T=6.5MM			
0884-17-635B	1	T=6.6MM			
17-651		WASHER,THRUST			
M501-17-651	4	T=3MM			
M501-17-653	2	T=3.1MM			
M501-17-654	2	T=3.2MM			
M501-17-655	2	T=2.9MM			
17-652		RING,THRUST WASHER			
M501-17-652	2	T=2MM			
17-724A		SPRING,SYNCHRO.KEY			
W501-17-724	2				
17-725C		RING,SYNCHRONIZER			
V501-17-725	1				

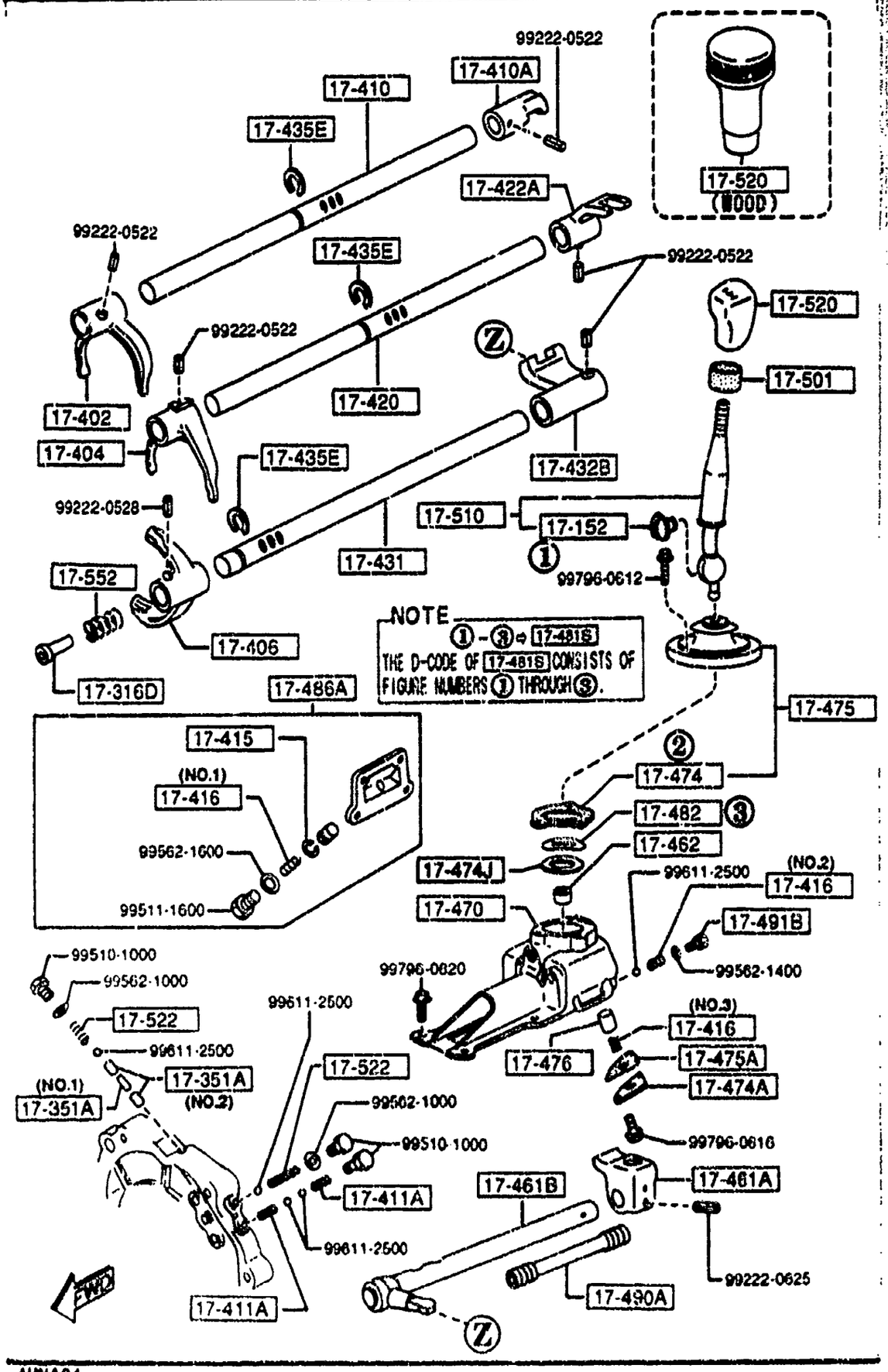

AUNA04

1720 -1 CHANGE CONTROL SYSTEM (MANUAL)

PART NO.	QTY	MODEL/RESTRICTION	MODEL/RESTRICTION	MODEL/RESTRICTION	FROM-TO
17-152		BUSH			
M501-17-515	1				
17-316D		SPACER			
M504-17-316	1				-4124
17-351A		PIN,INTER LOCK			
R501-17-351	1	(ILLUST. NO.1)			
0114-17-351	2	(ILLUST. NO.2)			
17-402		FORK,SHIFT(1ST&2ND)			
M503-17-402	1				
17-404		FORK,SHIFT(3RD&4TH)			
M501-17-404B	1				
17-406		FORK,SHIFT			
M504-17-406A	1				
17-410		ROD,SHIFT(1ST&2ND)			
M503-17-411	1				
17-410A		END,S/ROD(1ST&2ND)			
M507-17-412	1				
17-411A		SPRING,SHIFT ROD-REVERSE			
0014-17-411	2				
17-415		RING,RETAINING-SHIFT ROD END			
3648-17-415	1				
17-416		SPRING,SHIFT ROD END			
M501-17-416	1	(ILLUST. NO.1)			
M504-17-416	1	(ILLUST. NO.2)			
M505-17-416	1	(ILLUST. NO.3)			
17-420		ROD,SHIFT(3RD&4TH)			
M504-17-421	1				
17-422A		END,S/ROD(3RD&4TH)			

4124 NA3MM-510039

1720 CHANGE CONTROL SYSTEM (MANUAL)

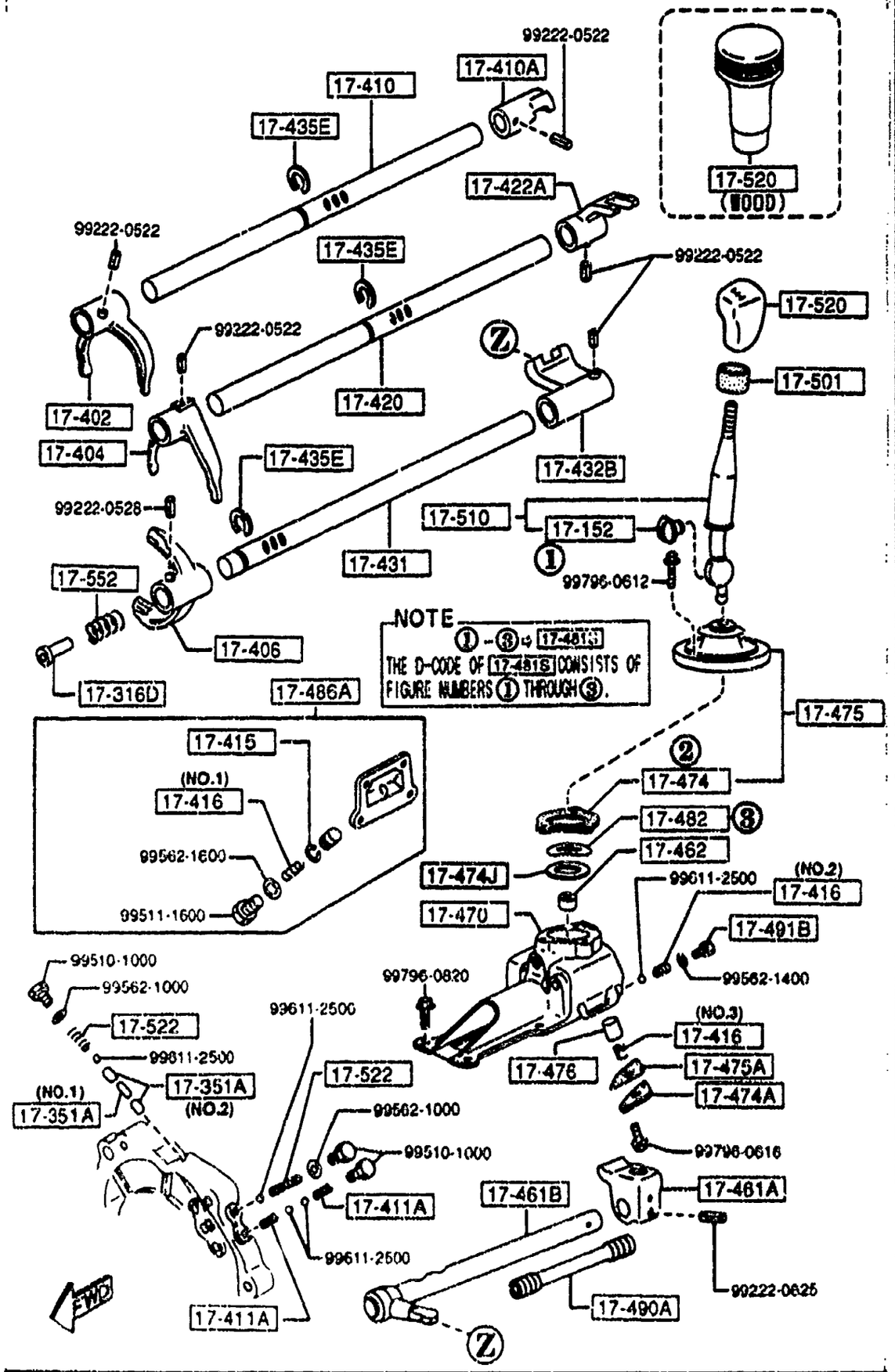

PART NO.	QTY	MODEL/RESTRICTION	MODEL/RESTRICTION	MODEL/RESTRICTION	FROM-TO
CONT'D					
M507-17-422	1				
17-431		ROD,SHIFT-OVER TOP & REVERSE			
M506-17-431A	1				
17-432B		END,SHIFT ROD(O/TOP& REV.)			
M508-17-432	1				
17-435E		RING,RETAINING			
R502-17-435	3				
17-461A		END,CONTROL LEVER			
M508-17-461A	1				
17-461B		ROD,CONTROL			
M516-17-450A	1				
17-462		SHEET,SPRING			
0398-17-462A	1				
17-470		CASE,CHANGE CONTROL			
M510-17-470C	1				
17-474		GASKET,COVER PLATE			
0303-17-474	1				
17-474A		CAP,SPRING			
M501-17-474	1				
17-474J		SHIM,ADJUST			
99963-3330	1	T=0.3MM			
17-475		BOOT,DUST-CHANGE LEVER			
M513-17-480A	1				
17-475A		GASKET,SPRING CAP			
M501-17-475	1				
17-476		SPINDLE,SELECT LOCK			
M502-17-476A	1				

1720 CHANGE CONTROL SYSTEM (MANUAL)

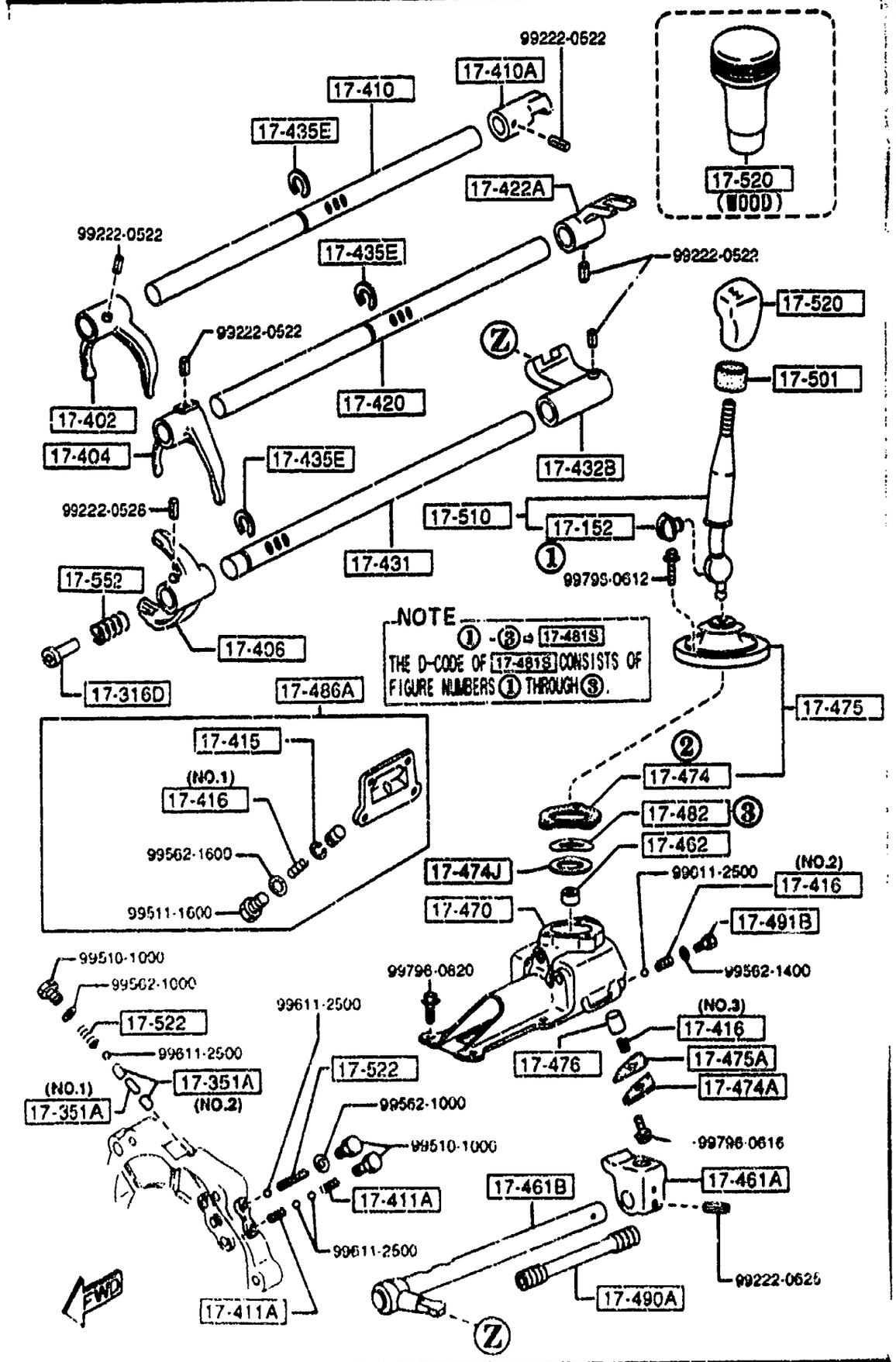

PART NO.	QTY	MODEL/RESTRICTION	MODEL/RESTRICTION	MODEL/RESTRICTION	FROM-TO
17-481S 8AN1-17-481	1	BUSH SET,CHANGE LEVER			
17-482 M505-17-482	1	WASHER,WAVE-CHANGE CONT.CASE			
17-486A R501-17-47X	1	COVER,BLIND			
17-490A M504-17-490A	1	COVER,ROD			
17-491B 0183-17-491	1	CAP,SPRING			
17-501 M501-17-501	1	INSULATOR,CHG LEVER			
17-510 M524-17-510C	1	LEVER,CHANGE			
17-520 M515-17-520	1	KNOB,CHANGE LEVER (URETHANE)			
00	INT-	NA3 NA5 NA4 NA6 BLACK			
M517-17-520	1	(WOOD)			
M518-17-520A	1	OPT, (LEATHER)			
17-522 0103-17-411	2	SPRING 5TH & REVERSE			
17-552 M504-17-552	1	SPRING			-4124
M505-17-552	1				4124-

4124 NA3***-510839

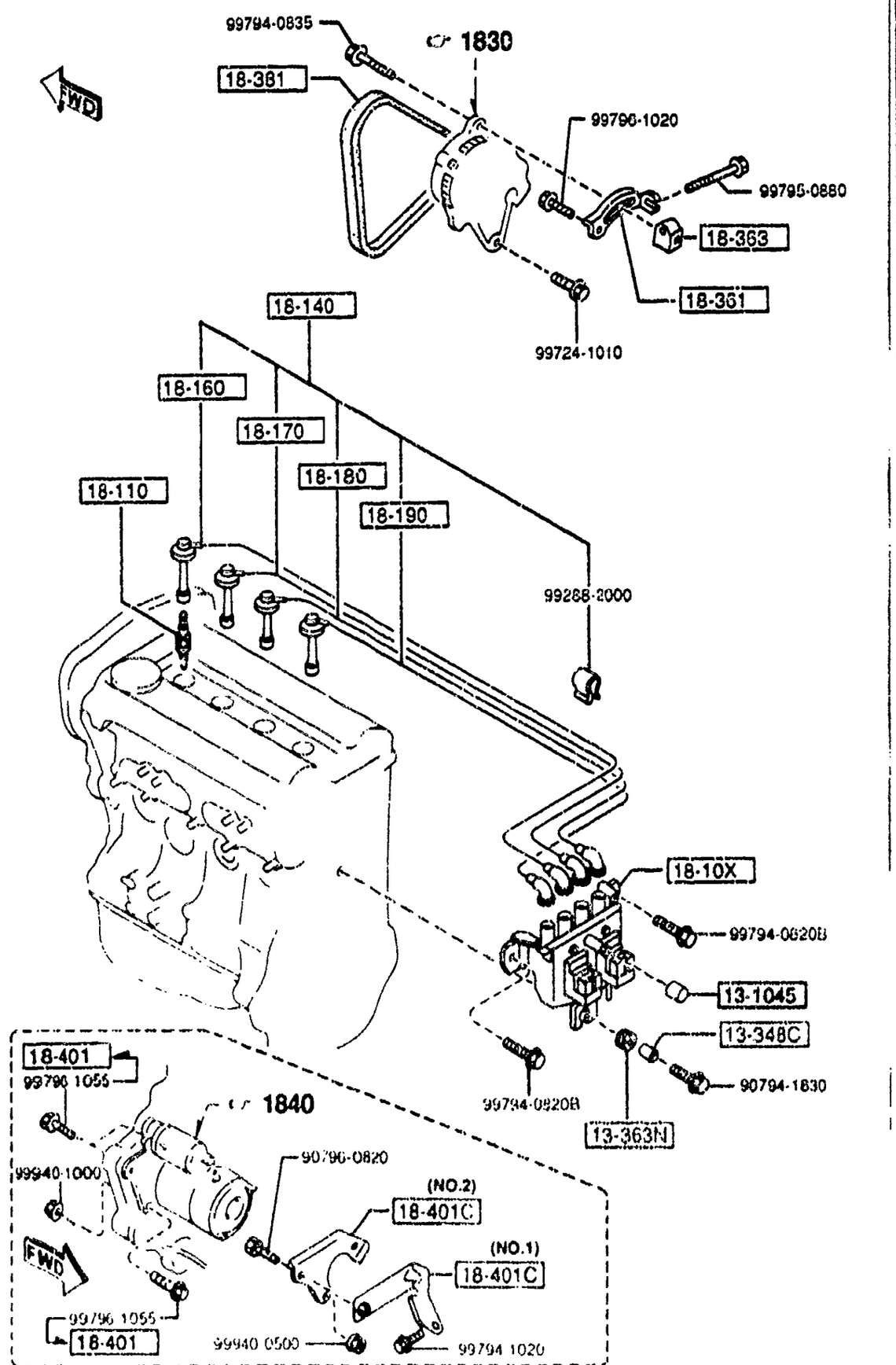

AUNA04

PART NO.	QTY	MODEL/RESTRICTION	MODEL/RESTRICTION	MODEL/RESTRICTION	FROM-TO
13-1045 JE08-13-104	1	CAP,BLIND			
13-348C B61P-13-348	1	SPACER			
13-363N B61P-13-363A	1	RUBBER,MOUNTING			
18-10X BPE8-18-10XA	1	COIL & IGNITER			
18-110 BP01-18-110	4	PLUG,SPARK BKR5E-11 NGK (STD.)			
BP02-18-110	4	K16PR-U11 ND (STD.)			
BP03-18-110	4	BKR6E-11 NGK (OPTION COLD TYPE)			
BP04-18-110	4	K20PR-U11 ND (OPTION COLD TYPE)			
18-140 BPE8-18-140A	1	CORD SET,HI.TENSION			
18-160 BPE8-18-T51	1	CORD NO.1,HI.TENSION			
18-170 BPE8-18-T52	1	CORD NO.2,HI.TENSION			
18-180 BPE8-18-T53	1	CORD NO.3,HI.TENSION			
18-190 BPE8-18-T54A	1	CORD NO.4,HI.TENSION			
18-361 B6BF-18-361B A (B6BF-18-361C)	1	STRAP,ALTERNATOR			-3C13
B6BF-18-361C	1				3C13-

3C13 NA3***-508545

CAT. AUNA04-03

1995-04

1800 ENGINE ELECTRICAL SYSTEM

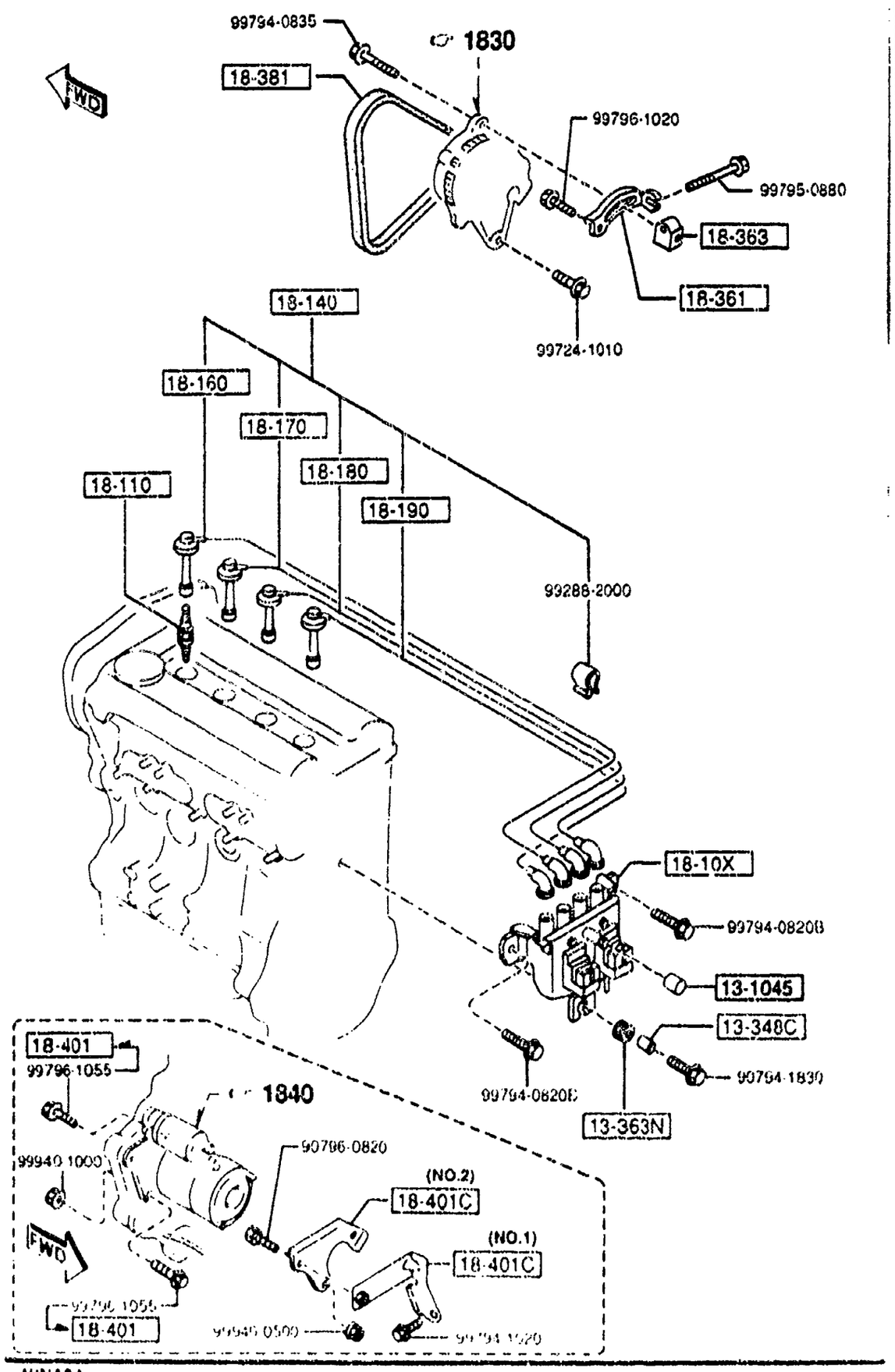

AUNA04

PART NO	QTY	MODEL/RESTRICTION	MODEL/RESTRICTION	MODEL/RESTRICTION	FROM-TO
18-363		SPACER,STRAP			
FP01-18-363	1				
18-381		BELT'V'			
B6BF-18-381	1	4PK L=885 BANDO			
B596-18-381	1	4PK L=885 GOOD YEAR			4201-
18-401		BOLT,STARTER			
B6BG-18-401	3				3C01-
18-401C		BRACKET,STARTER			
BPE8-18-410	1	(ILLUST. NO.1)			
B660-18-411C	1	(ILLUST. NO.2)			

3C01 NA3***-507607
4201 NA3***-511601

1830 ALTERNATOR

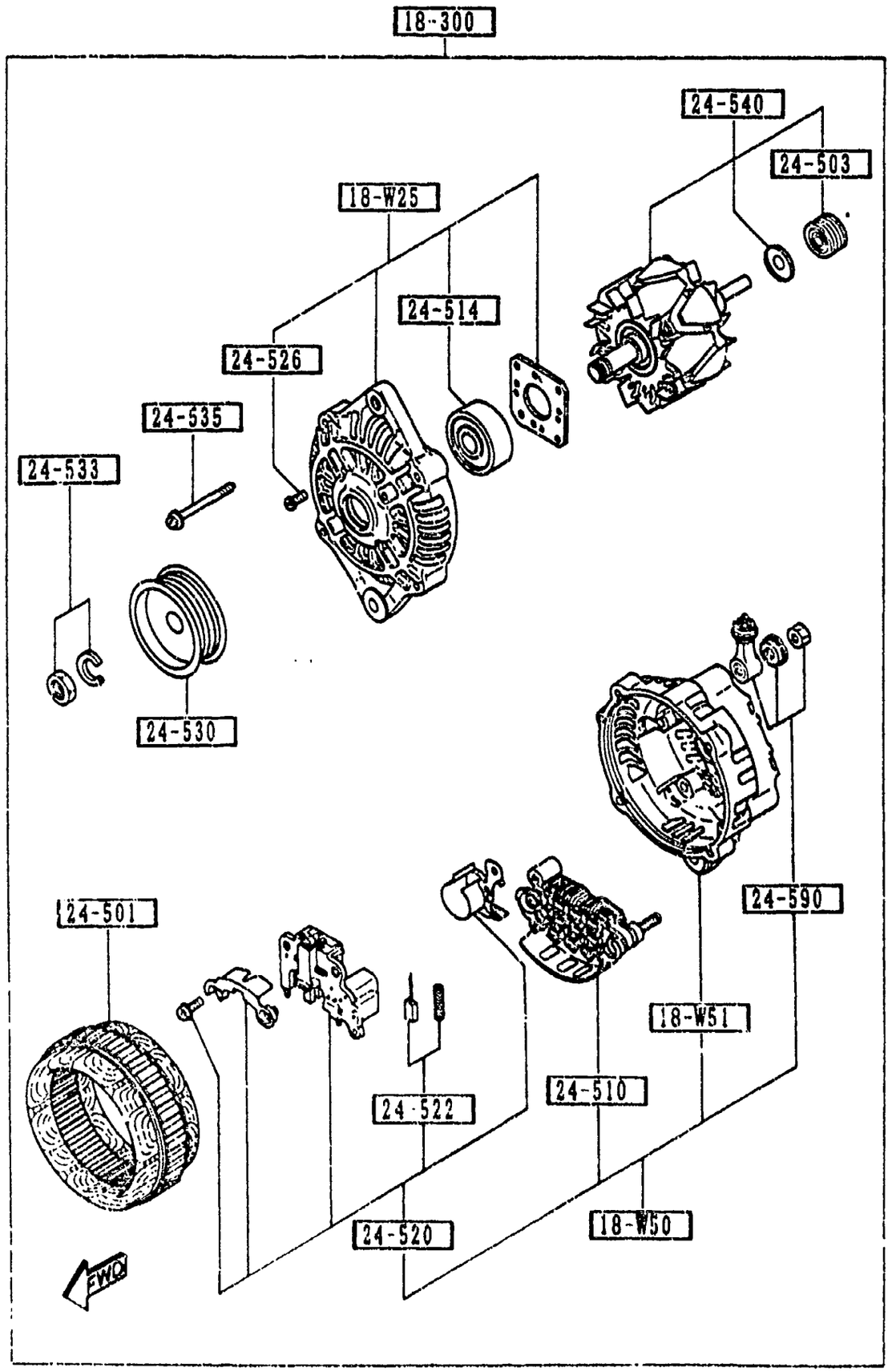

PART NO.	QTY	MODEL/RESTRICTION	MODEL/RESTRICTION	MODEL/RESTRICTION	FROM-TO
18-W25		COVER,FRONT-ALTERNATOR			
BPD3-18-W25	1				-4101
FS05-18-W25	1				4101-
18-W50		COVER,REAR-ALTERNATOR			
BPE8-18-W50	1				
18-W51		COVER,REAR-ALTERNATOR			
FS05-18-W51	1	(G)			
18-300		ALTERNATOR			
BPE8-18-300	1	(MT)			
BPE9-18-300	1	(AT)			
24-501		STATOR			
JE15-18-W45	1				
24-503		BEARING,BALL-ALT. REAR			
N336-18-W36	1				
24-510		RECTIFIER			
BPE8-18-W60	1				
24-514		BEARING,BALL-ALT. FRONT			
PN16-18-W27	1				
24-520		REGULATOR,VOLTAGE			
B64J-18-W70A	1				
24-522		BRUSH			
B3C7-16-W77	2				
24-526		SCREW SET			
RF71-18-W26	1				
24-530		PULLEY			
B3C7-18-W10	1				
24-533		NUT SET			
B3C7-18-W05	1				

4101 NA3###-509503

1830 ALTERNATOR

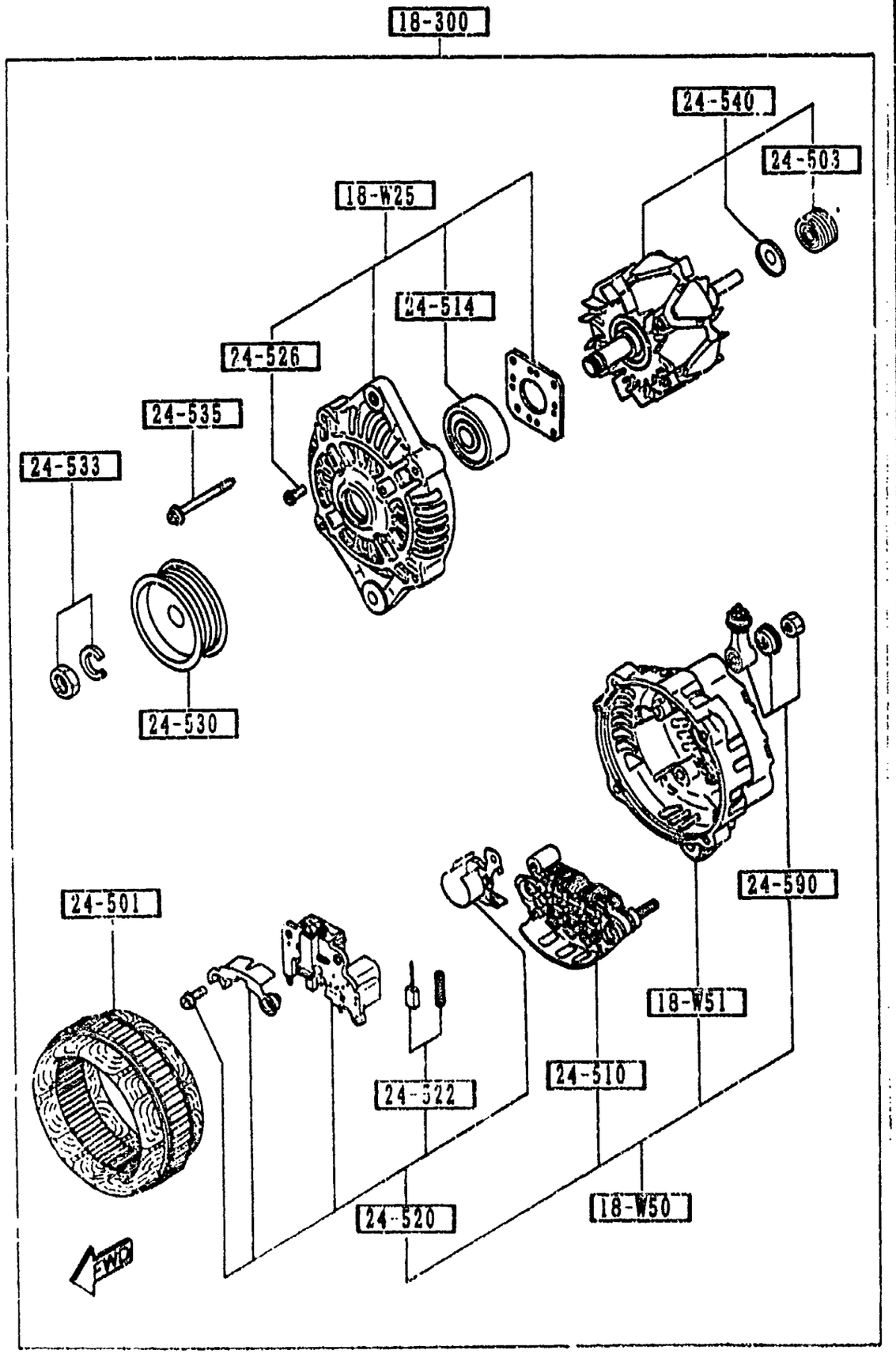

PART NO	QTY	MODEL/RESTRICTION	MODEL/RESTRICTION	MODEL/RESTRICTION	FROM-TO
24-535		SCREW SET			
RF71-18-W20	1				
24-540		ROTOR			
BPD3-18-W35	1	(AT)			
B366-18-W35D	1	(MT)			
24-590		TERMINAL SET			
BPD3-18-W80	1				

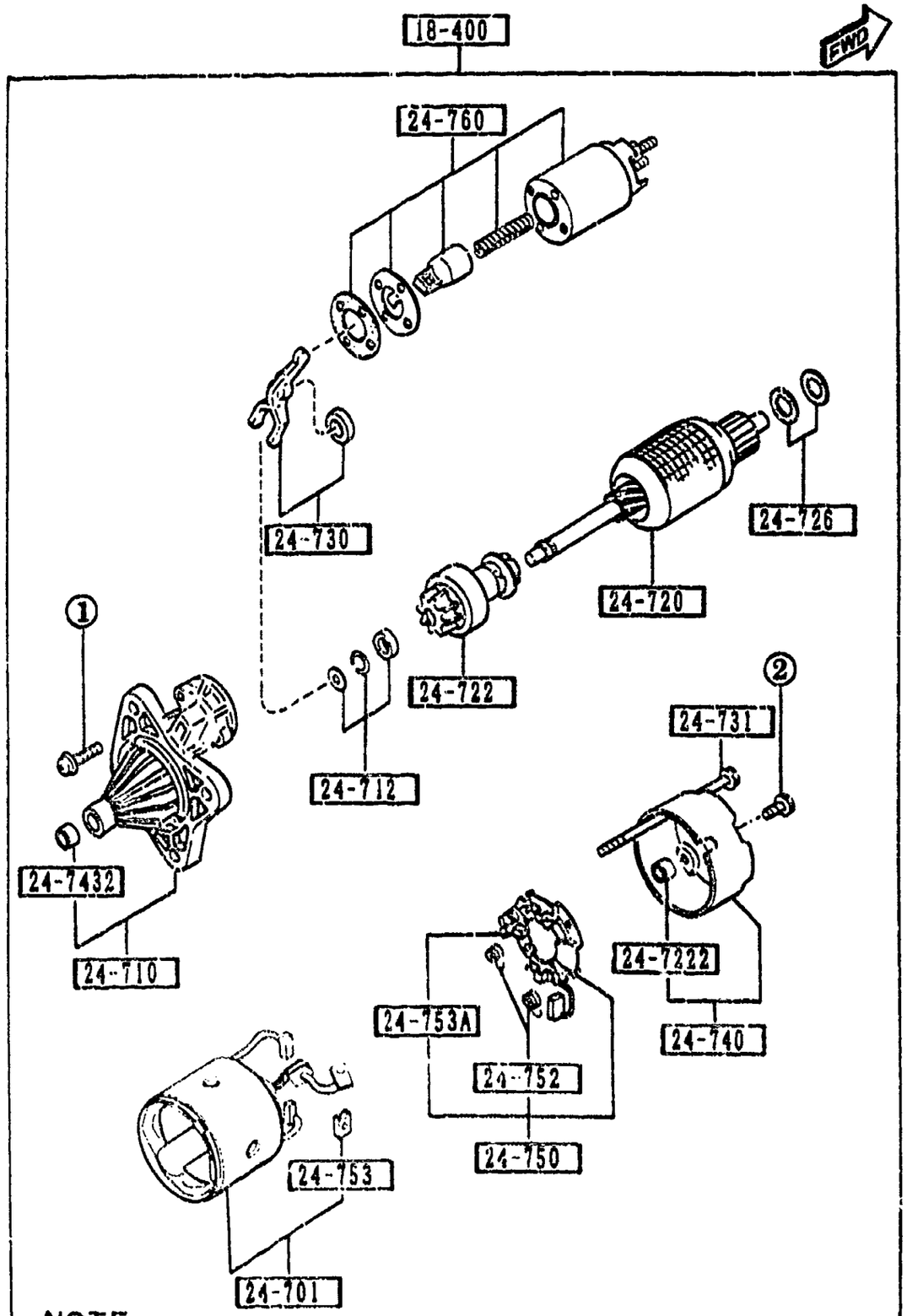

NOTE

① ··· ② ⇨ 24-725

THE D-CODE OF 24-725 CONSISTS OF FIGURE NUMBERS ① THROUGH ②.

PART NO.	QTY	MODEL/RESTRICTION	MODEL/RESTRICTION	MODEL/RESTRICTION	FROM-TO
18-400		STARTER			
B61R-18-400A	1	NON ASBESTOS			
24-701		YOKE			
B61R-18-X65	1				
24-710		BRACKET,FRONT			
B61R-18-X00	1				
24-712		STOPPER SET			
E356-18-X30	1				
24-720		ARMATURE			
B658-18-X60	1	NON ASBESTOS			
24-722		CLUTCH,OVER RUNNING			
B630-18-X45	1				
24-7222		SLEEVE,BEARING-REAR			
E356-18-X81	1				
24-725		SCREW SET			
E356-18-X95	1				
24-726		WASHER SET			
E356-18-X92	1				
24-730		LEVER			
E356-18-X05	1				
24-731		BOLT SET			
B630-18-X90	2				
24-740		BRACKET,REAR			
E356-18-X80	1				
24-7432		SLEEVE,BEARING-FRONT			
F210-18-X01	1				

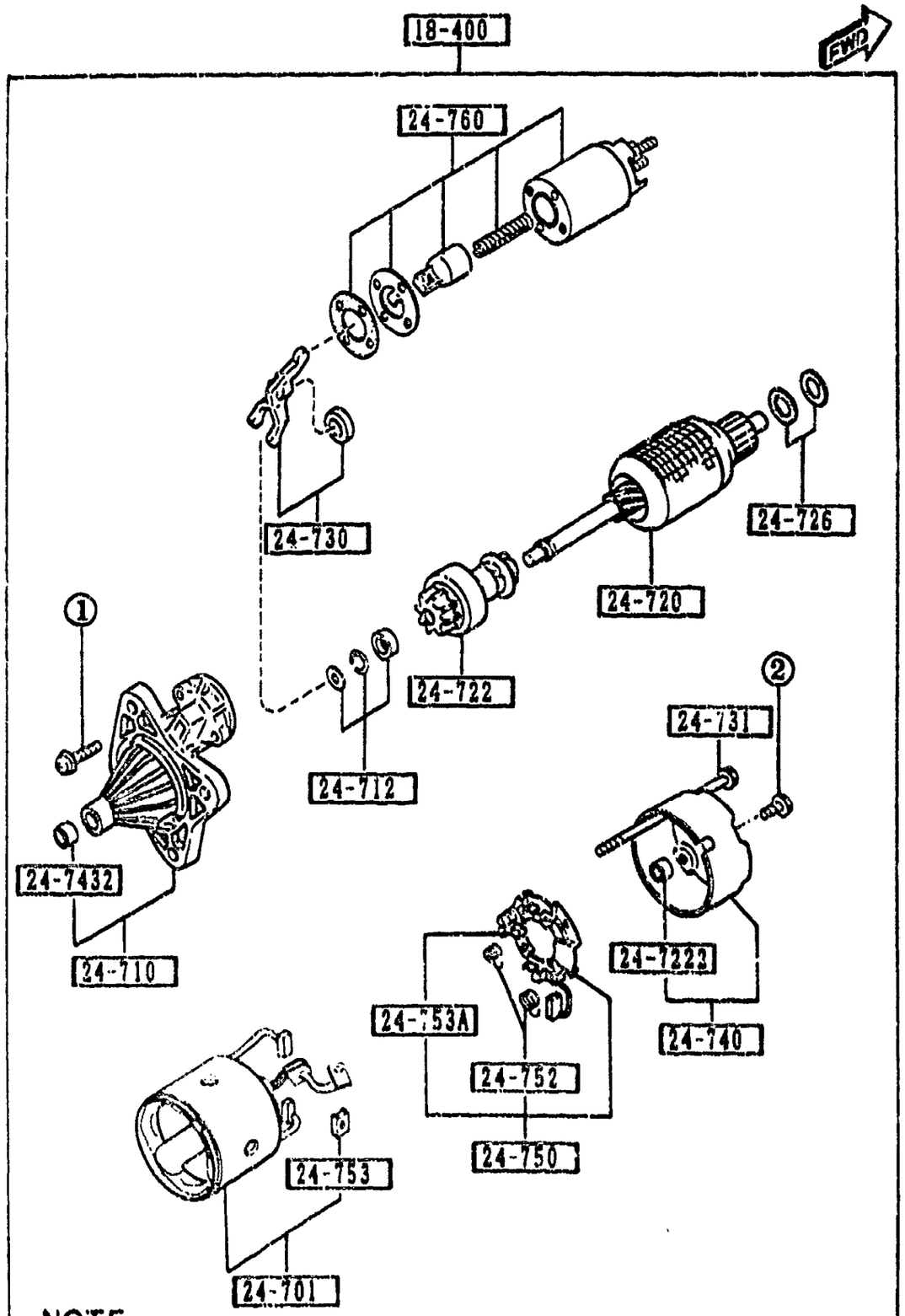

NOTE:
①-②⇨ 24-725
THE D-CODE OF 24-725 CONSISTS OF FIGURE NUMBERS ① THROUGH ②.

PART NO.	QTY	MODEL/RESTRICTION	MODEL/RESTRICTION	MODEL/RESTRICTION	FROM-TO
24-750		HOLDER,BRUSH			
B61R-18-X70	1				
24-752		SPRING,BRUSH			
0222-24-752A	4				
24-753		BRUSH,YOKE			
B630-18-X66	2				
24-753A		BRUSH			
B660-18-X66	2				
24-760		SWITCH			
E356-18-X10	1				

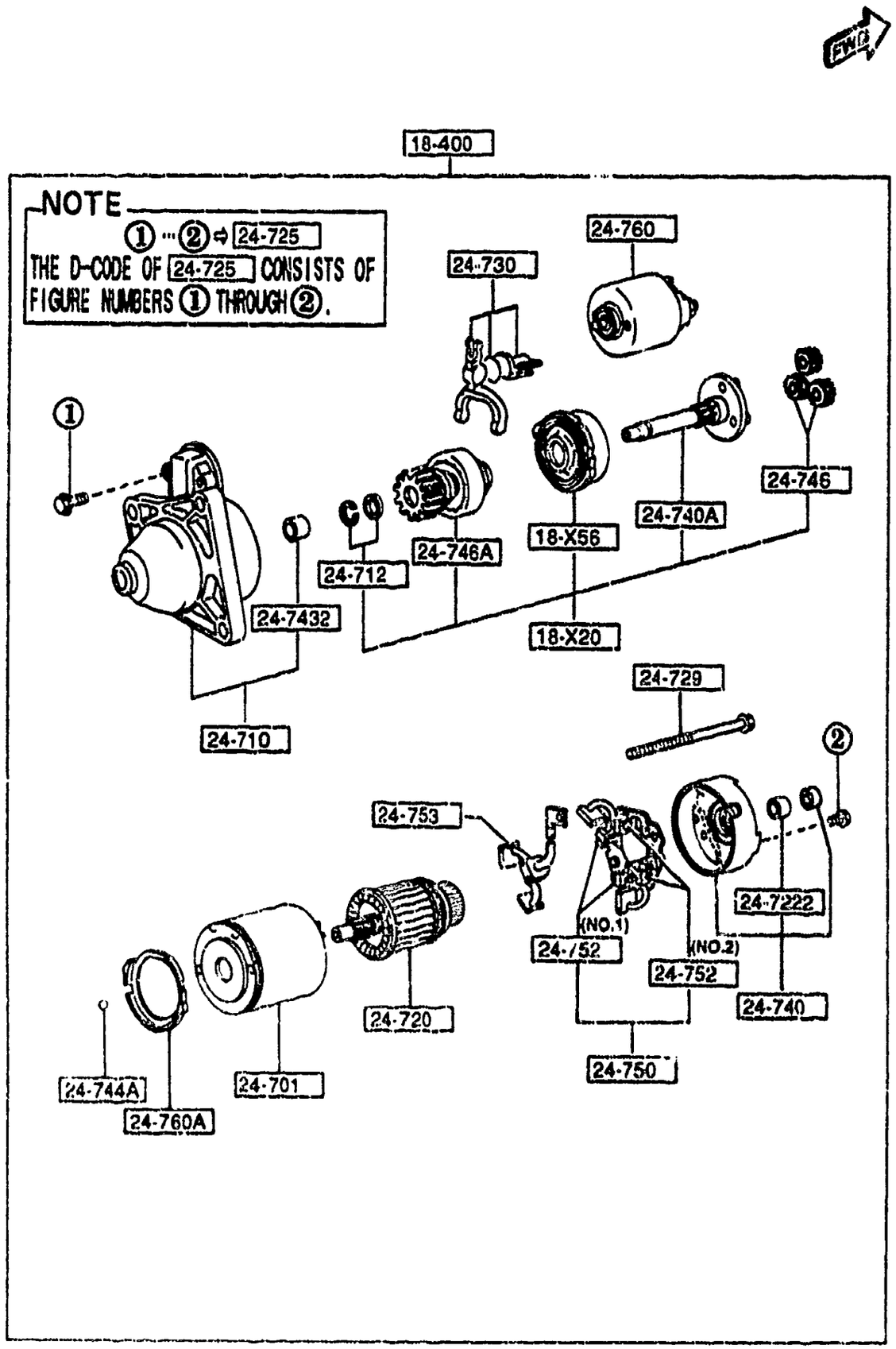

PART NO.	QTY	MODEL/RESTRICTION	MODEL/RESTRICTION	MODEL/RESTRICTION	FROM-TO
18-X20		SHAFT,PINION			
AM15-18-X20	1				
18-X56		GEAR,INTERNAL-STARTER			
F225-18-X56	1				
18-400		STARTER			
BPE9-18-400	1				
24-701		YOKE			
JF01-18-X65	1				
24-710		BRACKET,FRONT			
BPE9-18-X00	1				
24-712		STOPPER SET			
N326-18-X30	1				
24-720		ARMATURE			
F214-18-X60A	1	NON ASBESTOS			
24-7222		SLEEVE,BEARING-REAR			
N326-18-X62A	1				
24-725		SCREW SET			
E356-18-X95	1				
24-729		BOLT			
N326-18-X91	2				
24-730		LEVER			
N326-18-X05	1				
24-740		BRACKET,REAR			
JF01-18-X80A	1				
24-740A		SHAFT			
F214-18-X40	1				
24-7432		SLEEVE,BEARING-FRONT			

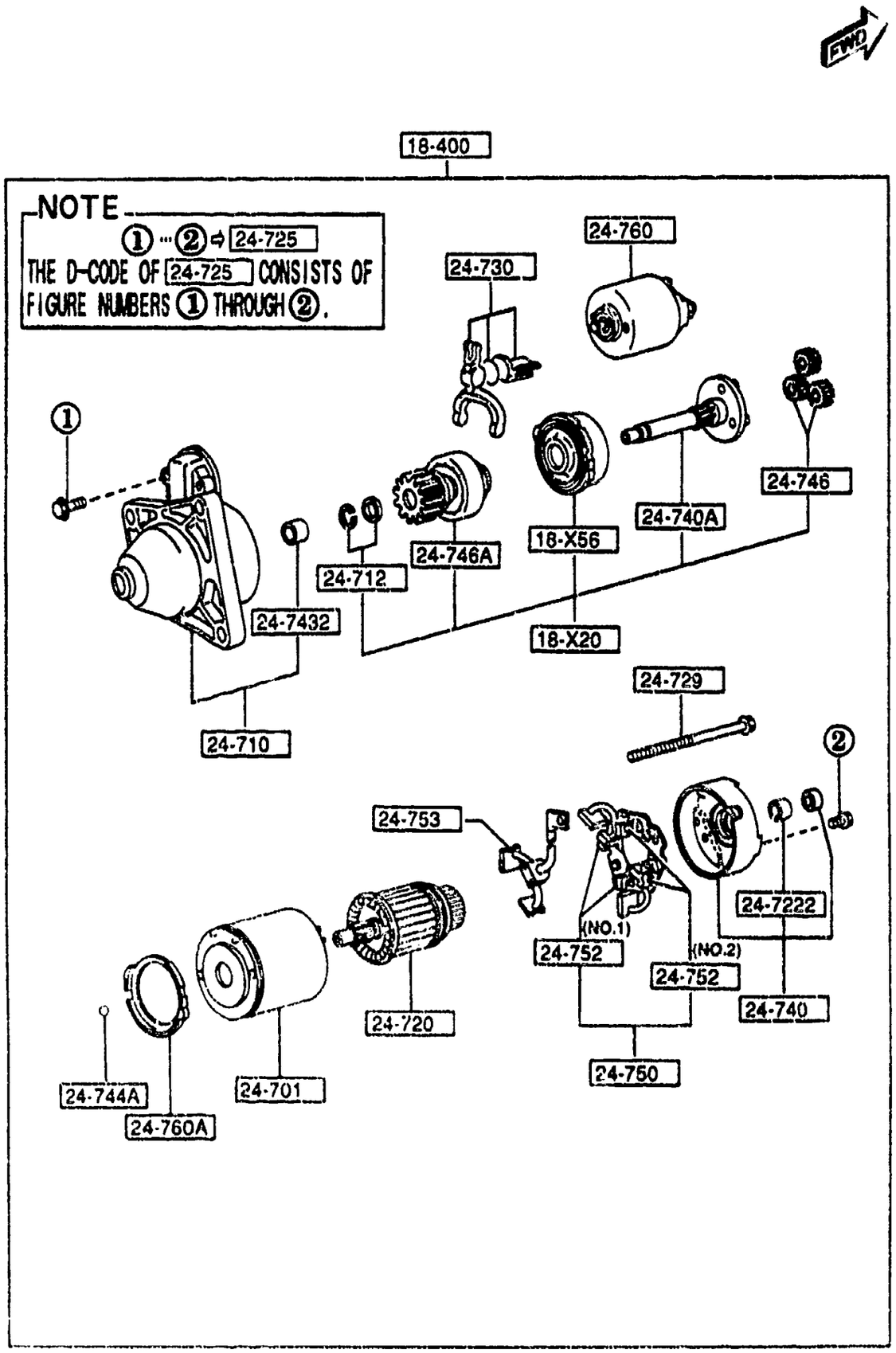

1840 A-2 * STARTER
(AT)

PART NO.	QTY	MODEL/RESTRICTION	MODEL/RESTRICTION	MODEL/RESTRICTION	FROM-TO
CONT'D					
E356-18-X01	1				
24-744A		BALL,STEEL			
N326-18-X93	1				
24-746		GEAR			
N326-18-X57	3				
24-746A		PINION			
AM15-18-X25	1				
24-750		HOLDER,BRUSH			
F214-18-X70	1				
24-752		SPRING,BRUSH			
N318-18-X71	2	(ILLUST. NO.1)			
N326-18-X71	2	(ILLUST. NO.2)			
24-753		BRUSH,YOKE			
F214-18-X66	1				
24-760		SWITCH			
E356-18-X10	1				
24-760A		GASKET			
N326-18-X87	1				

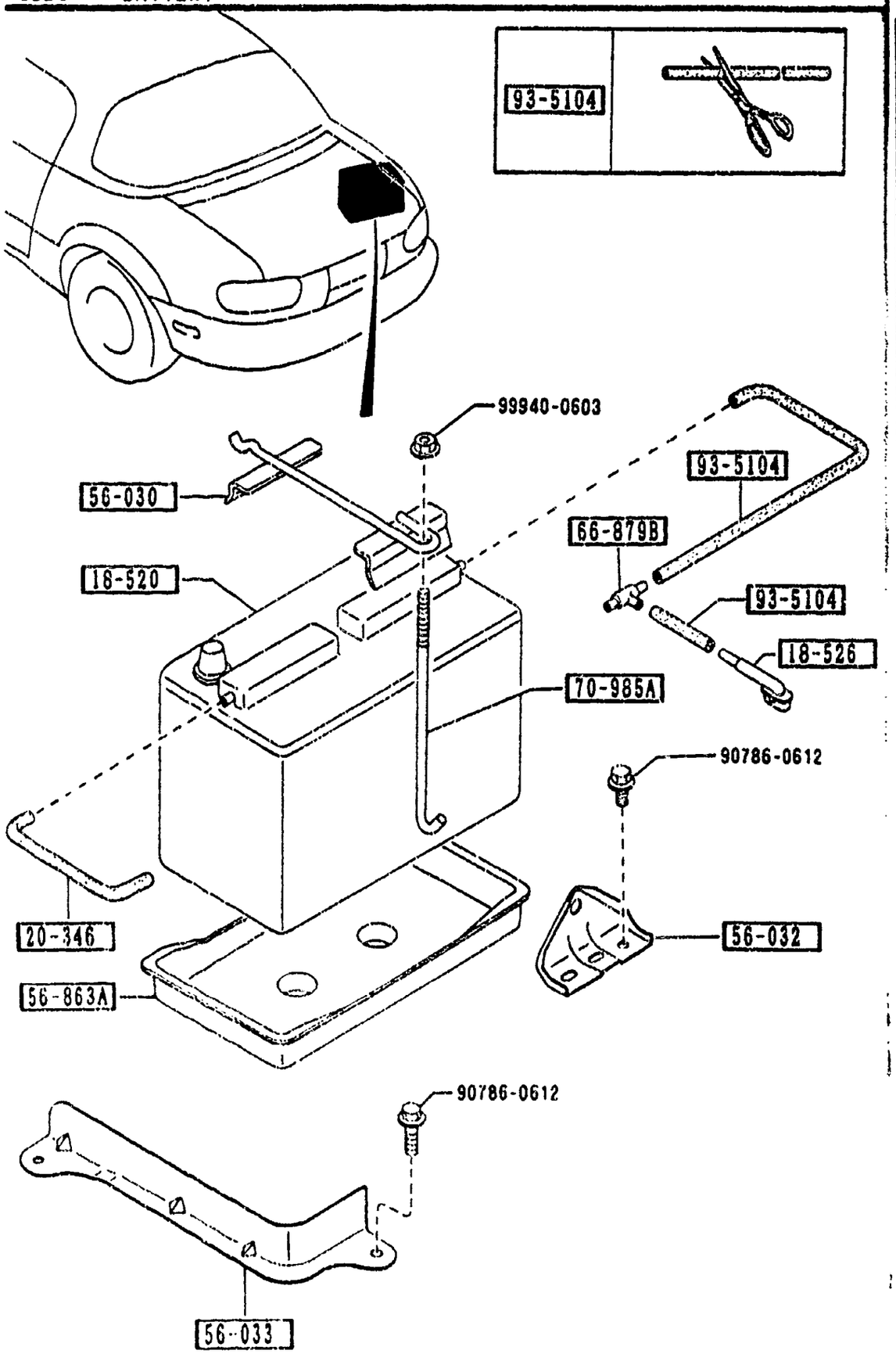

PART NO.	QTY	MODEL/RESTRICTION	MODEL/RESTRICTION	MODEL/RESTRICTION	FROM-TO
18-520		BATTERY			
B6AC-18-520	1	S46A24L(S) PANASONIC			
18-526		CONNECTOR,TUBE-BATTERY			
B61P-18-526	1				
20-346		TUBE,VACUUM			
B61P-18-524	1				
56-030		CLAMP,BATTERY			
NA01-56-03XA	1				
56-032		BRACKET,BATTERY CLAMP			
NA01-56-032A	1				
56-033		BRACKET,STOPPER-BATTERY			
NA01-56-033A	1				
56-863A		TRAY,BATTERY			
B095-56-032	1				
66-879B		JOINT			
0813-66-879	1				
70-985A		BOLT,CLAMP			
0259-54-292A	1				
93-5104		HOSE			
99351-04999	1				

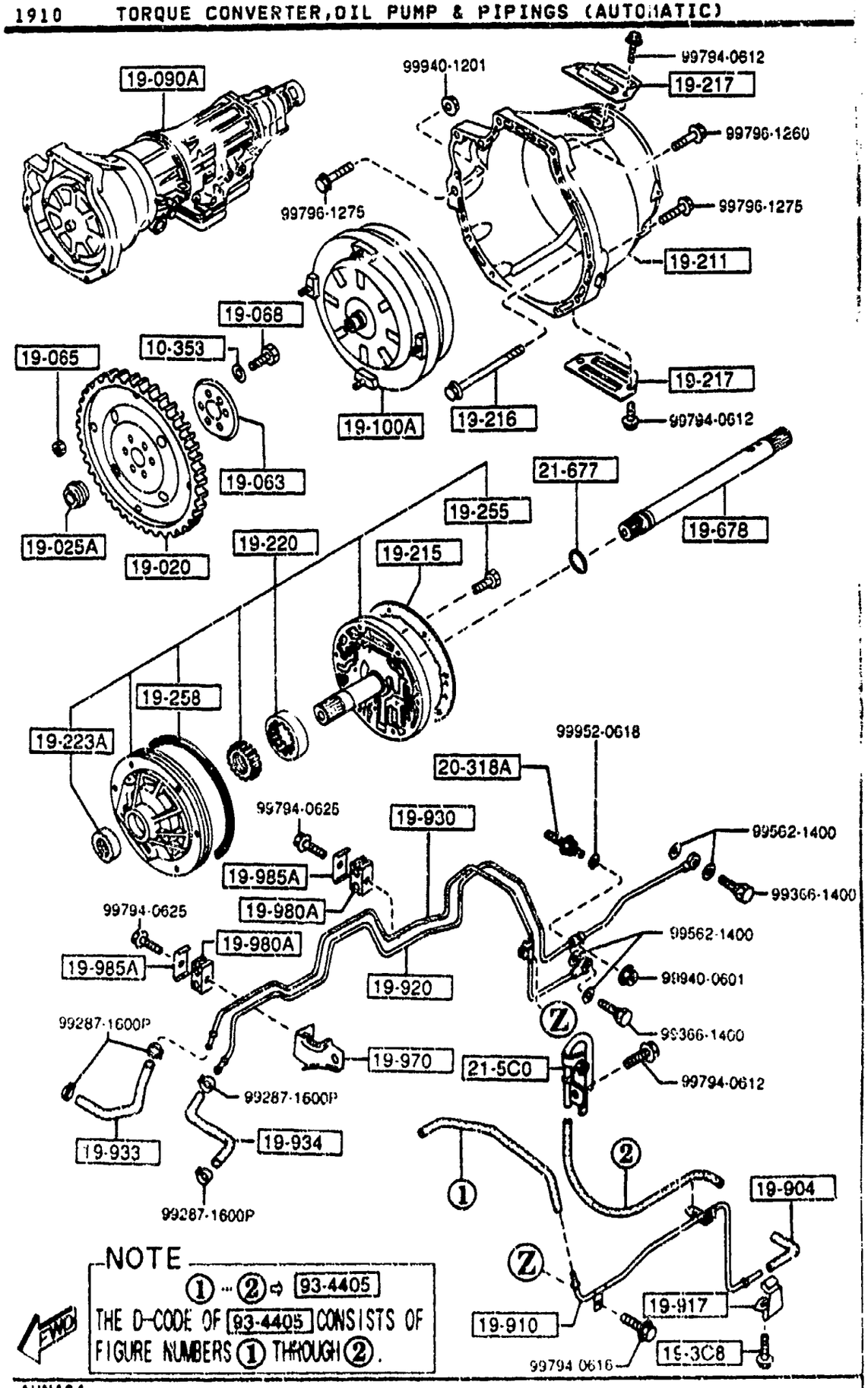

AUNA04

PART NO.	QTY	MODEL/RESTRICTION	MODEL/RESTRICTION	MODEL/RESTRICTION	FROM-TO
10-353		WASHER,PLAIN			
0290-10-353	6				
19-020		PLATE,DRIVE			
BU55-19-020	1				
19-025A		ADAPTER,DRIVE PLATE			
FU60-19-025	1				
19-063		PLATE,BACKING			
FT31-19-063	1				
19-065		NUT			
FU51-19-065	4				
19-068		BOLT,LOCK			
FT31-19-064	6				
19-090A		T/MISSION CPT.			
N451-19-090A	1				-3B04
A (N451-19-090B)					
N451-19-090B	1				3B04-4127
A (N451-19-090C)					
N451-19-090C	1				4127-
19-100A		CONVERTER,TORQUE			
BU55-19-100	1				
19-211		HOUSING,CONVERTER			
BU55-19-211	1				
19-215		GASKET,OIL PUMP			
BU46-19-215	1	NON ASBESTOS			
19-216		BOLT			
BU01-19-216	6				
19-217		COVER,BLIND			
BU55-19-217	2				

3B04 NA3***-506093
4127 NA3***-511188

1910 TORQUE CONVERTER,OIL PUMP & PIPINGS (AUTOMATIC)

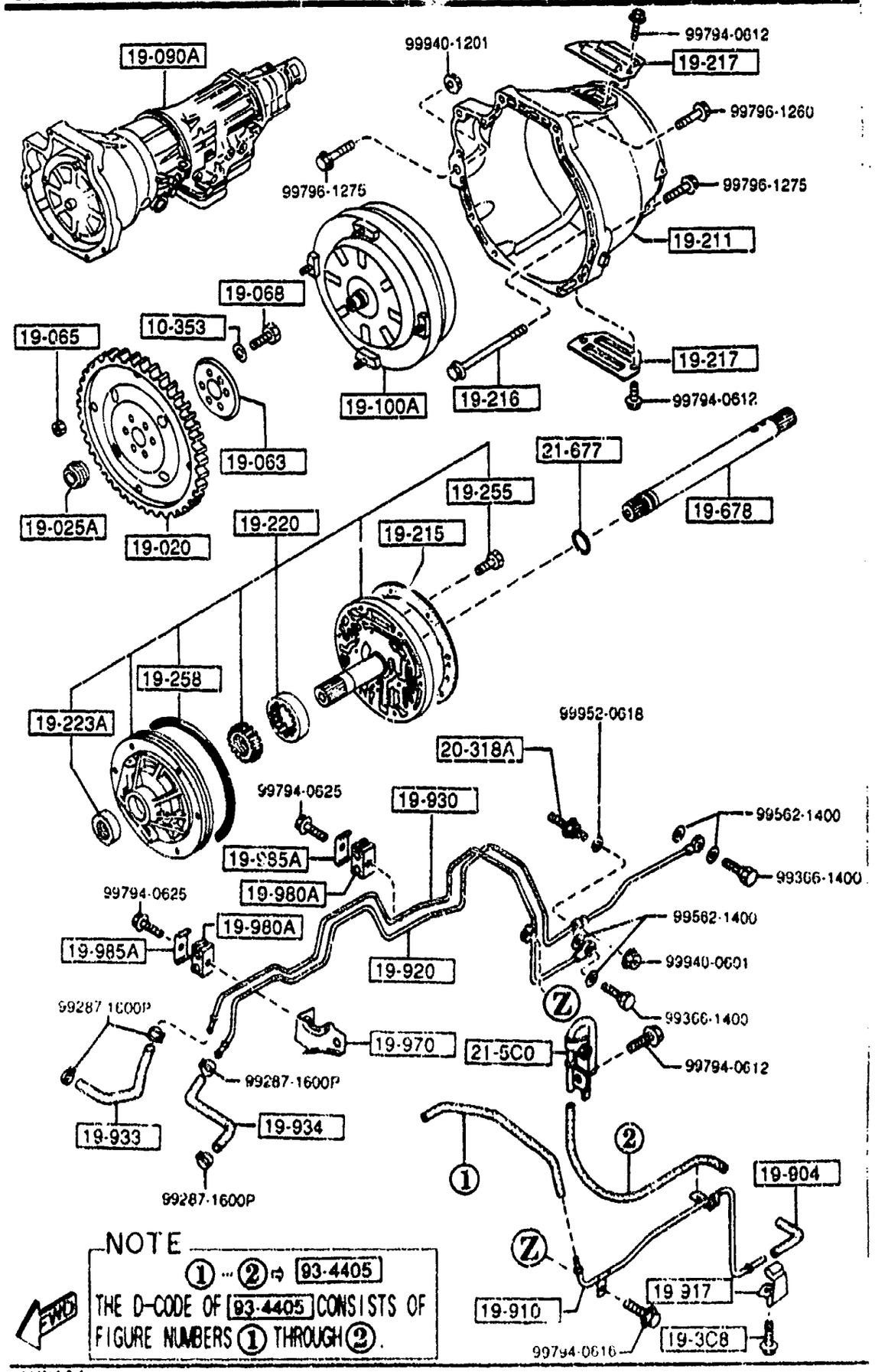

PART NO.	QTY	MODEL/RESTRICTION	MODEL/RESTRICTION	MODEL/RESTRICTION	FROM-TO
19-220		PUMP,OIL			
N451-19-220	1				
19-223A		SEAL,OIL			
0338-19-223A	1	NOK			
19-255		BOLT			
0338-19-255	5				
19-258		SEAL,CUT RING			
0338-19-258	1				
19-3C8		BOLT,BAFFLE PLATE			
BU55-19-3C8	1				
19-678		SHAFT,INPUT			
N451-21-678	1				
19-904		HOSE,VACUUM			
0338-19-904A	1				
19-910		PIPE,VACUUM			
BU55-19-910A	1				
19-917		CLIP			
0436-19-917	1				
19-920		PIPE,OIL			
N451-19-920	1				
19-930		PIPE,OIL			
N452-19-930	1				
19-933		HOSE,OIL			
BU55-19-933A	1				
19-934		HOSE,OIL			
BU55-19-934A	1				
19-970		BRACKET			

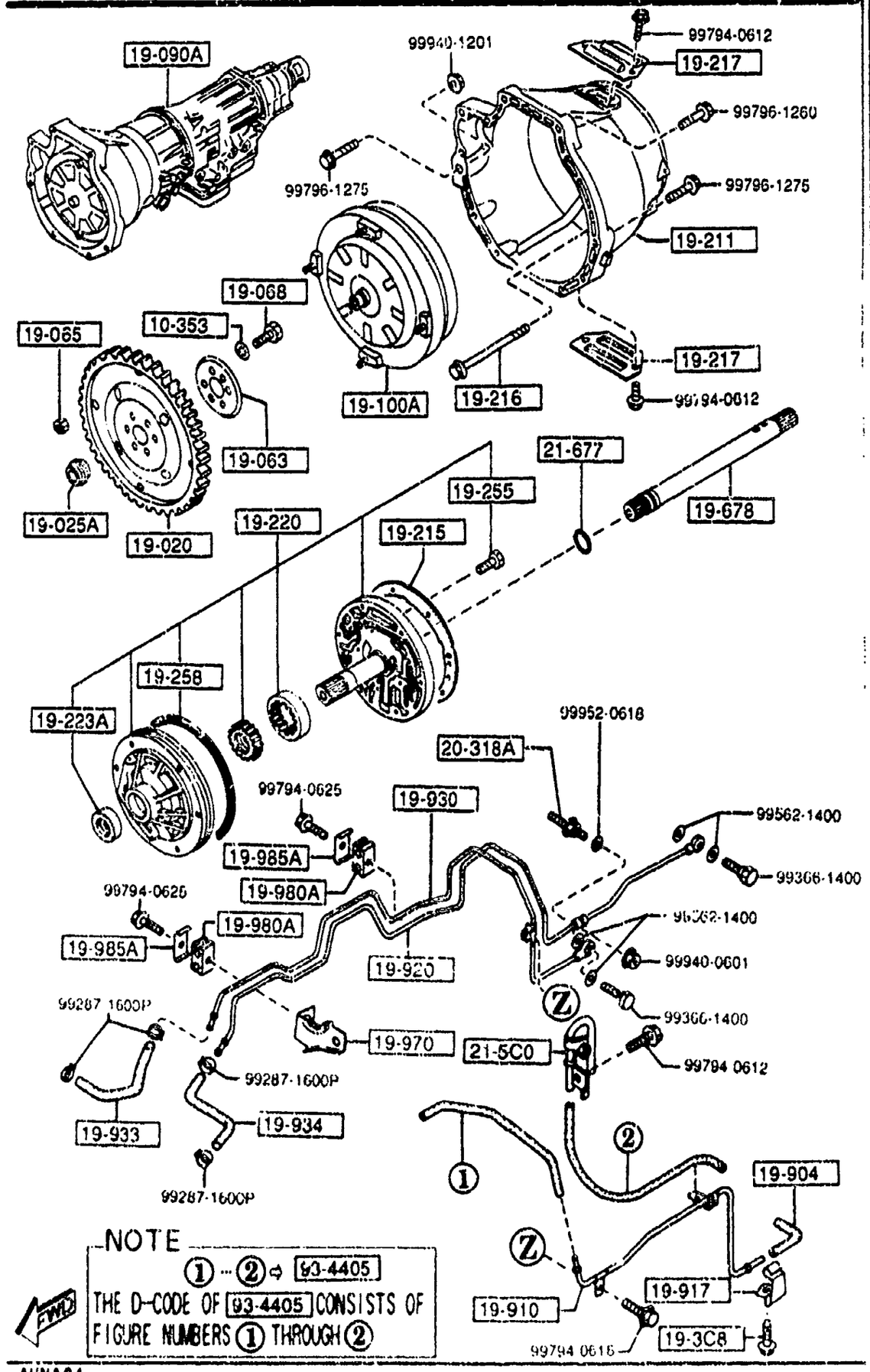

PART NO.	QTY	MODEL/RESTRICTION	MODEL/RESTRICTION	MODEL/RESTRICTION	FROM-TO
CONT'D					
BU55-19-970A	1				
19-980A		SUPPORT,OIL PIPE			
BU29-19-980	2				
19-985A		CLIP,OIL PIPE			
BU29-19-985	2				
20-318A		BOLT			
BU27-19-838	1				
21-5C0		BREATHER			
N451-21-5C0	1				
21-677		RING,'O'			
BU01-21-677	1				
93-4405		HOSE			
99344-05150	1				

1920 TRANSMISSION CASE & MAIN CONTROL SYSTEM (AUTOMATIC)

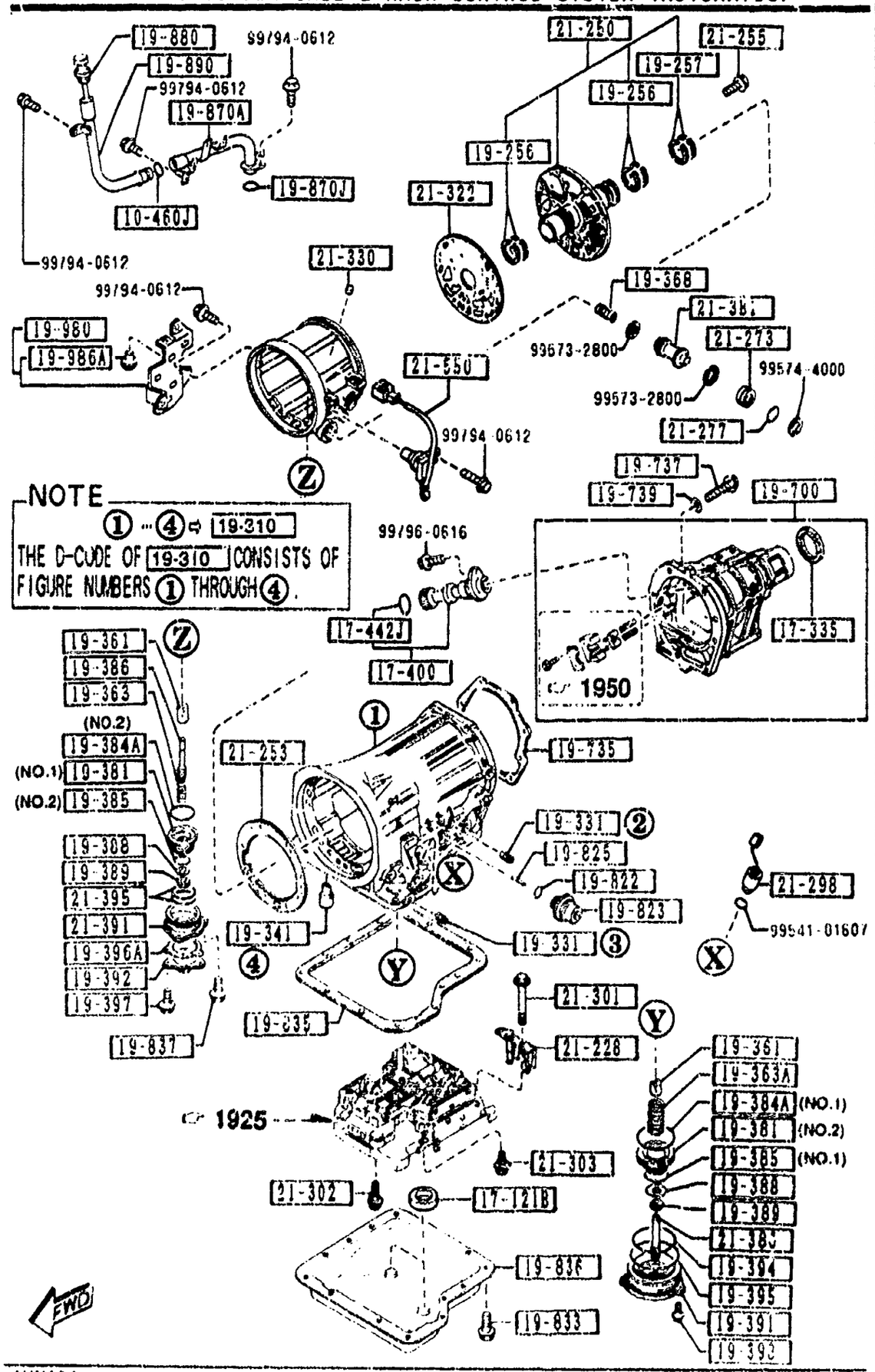

PART NO.	QTY	MODEL/RESTRICTION	MODEL/RESTRICTION	MODEL/RESTRICTION	FROM-TO
10-460J 99541-01201	1	RING,'O'			
17-121B F401-17-121	2	MAGNET			
17-335 M507-17-335A	1	SEAL,OIL			
17-400 N451-17-400	1	GEAR SET,DRIVEN-SPEED			
17-442J 1011-17-443	1	RING,'O'			
19-256 BU01-19-256	4	RING,SEAL			
19-257 BU01-19-257	2	RING,SEAL			
19-310 N451-19-310	1	CASE,T/MISSION			
19-331 0338-19-331A	2	PLUG,SQUARE HEAD			
19-341 0338-19-341	1	BOLT,ANCHOR END			
19-361 0338-19-361B	2	STRUT,BAND			
19-363 FT40-19-363	1	SPRING,PISTON RETURN			
19-363A BU10-19-363	1	SPRING,PISTON RETURN			
19-368 BU20-19-368	1	SPRING,CUSHION-PSTN. STEM			

1920 TRANSMISSION CASE & MAIN CONTROL SYSTEM (AUTOMATIC)

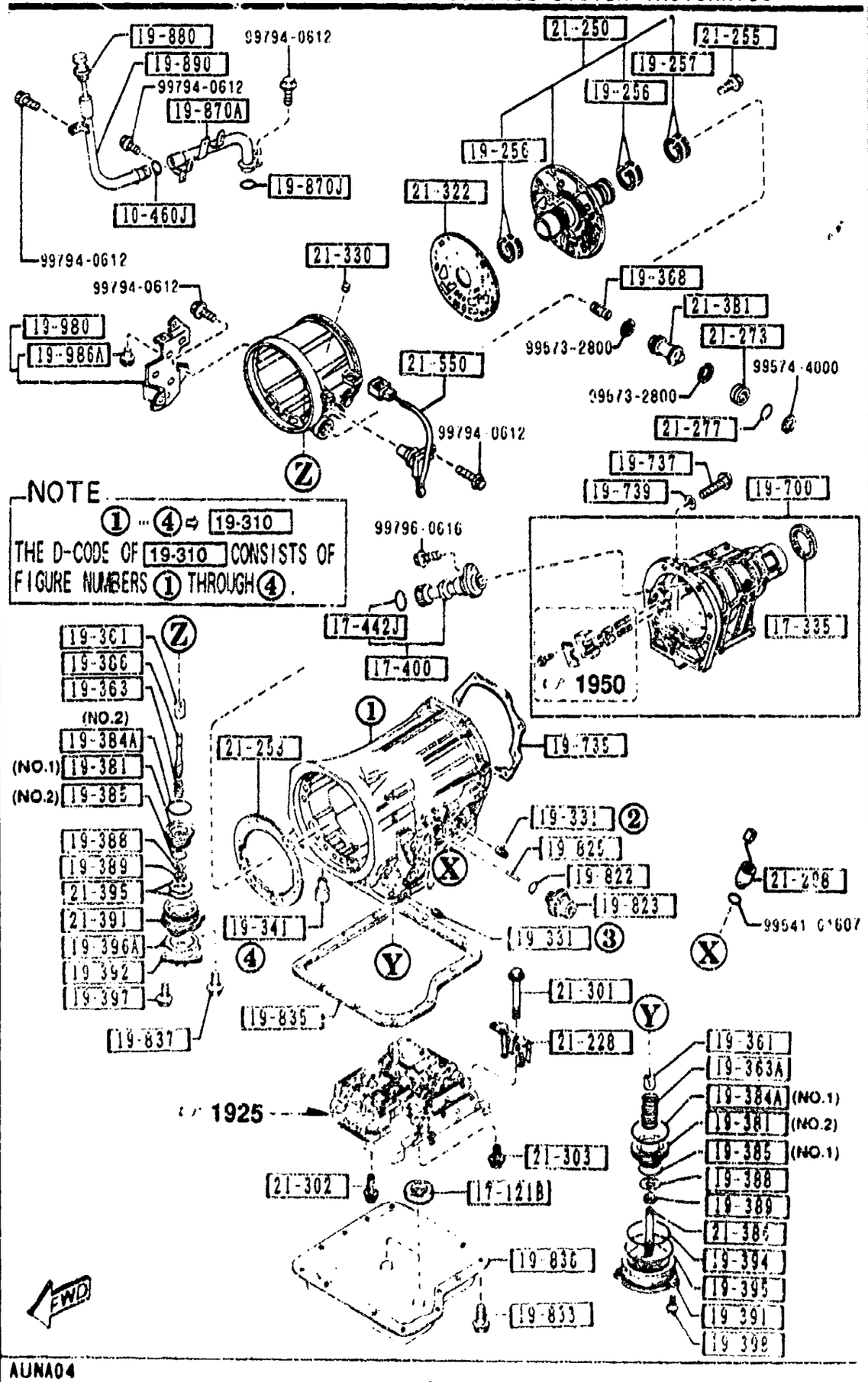

PART NO.	QTY	MODEL/RESTRICTION	MODEL/RESTRICTION	MODEL/RESTRICTION	FROM-TO
19-381		PISTON,BAND SERVO			
BV03-19-381	1	(ILLUST. NO.1)			
N451-19-381	1	(ILLUST. NO.2)			
19-384A		SEAL,PISTON			
BU10-19-384	1	(ILLUST. NO.1)			
BU55-19-384	1	(ILLUST. NO.2)			
19-385		SEAL,PISTON			
BU05-19-385	1	D=49.4MM (ILLUST. NO.1)			
0842-19-385	1	D=36MM (ILLUST. NO.2)			
19-386		STEM,PISTON			
0338-19-386A	1				
19-388		WASHER,PLAIN			
0338-19-388A	2				
19-389		NUT			
0338-19-389	2				
19-391		RETAINER,SERVO			
N451-19-391	1				
19-392		COVER,SERVO			
1758-19-392A	1				
19-394		SEAL,LATHE CUT			
0842-19-394	1				
19-395		RING,'O'			
0338-19-395	1				
19-396A		GASKET			
BU46-19-396	1	NON ASBESTOS			
19-397		BOLT			
1758-19-397	3				

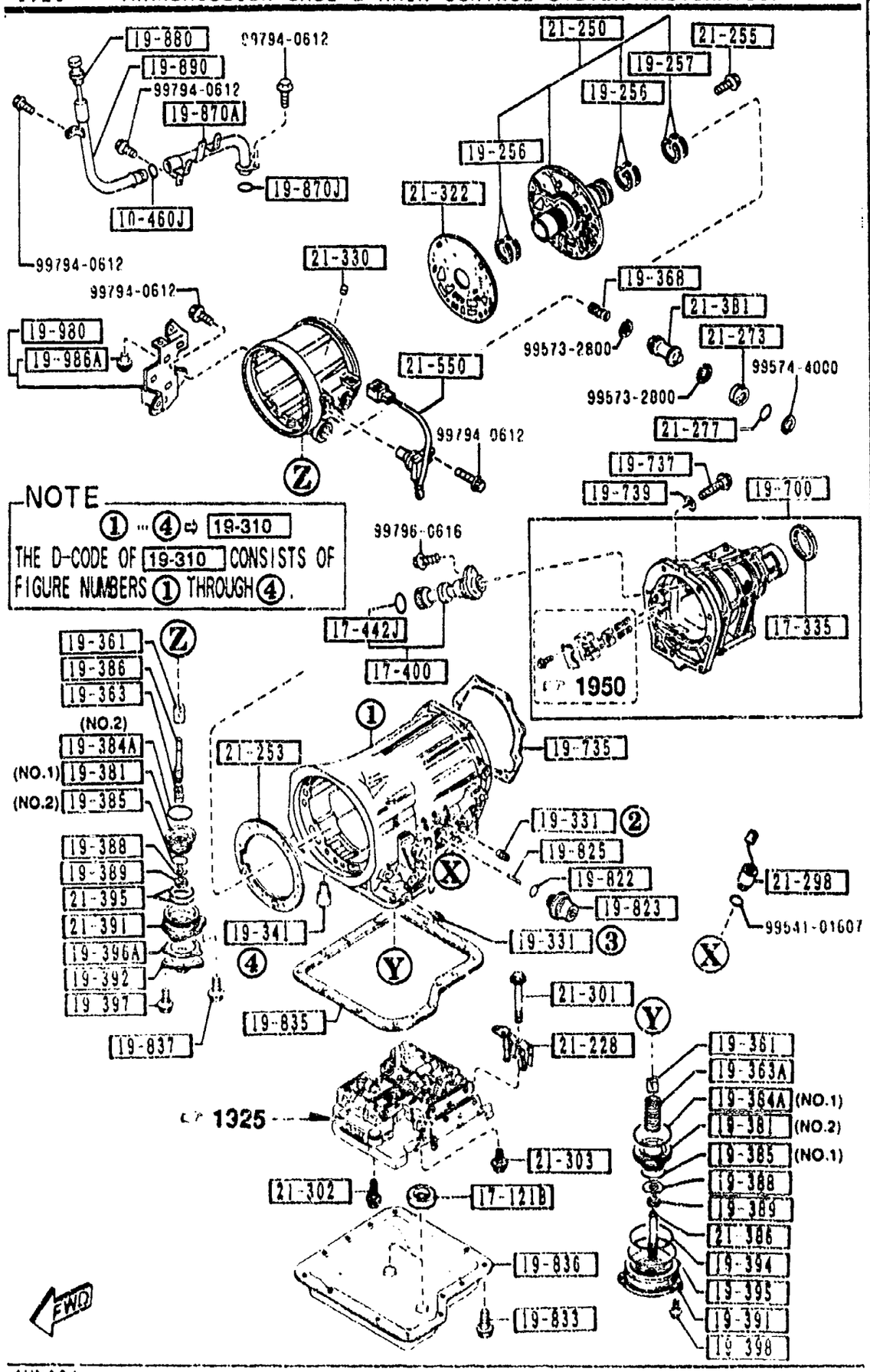

AUNA04

PART NO.	QTY	MODEL/RESTRICTION	MODEL/RESTRICTION	MODEL/RESTRICTION	FROM-TO
19-398 0338-19-398	3	BOLT			
19-700 BUY2-19-7A0	1	HOUSING,EXTENSION			
19-735 BT28-19-735	1	GASKET,EXTENSION NON ASBESTOS			
19-737 BV12-19-737	8	BOLT			
19-739 BV40-19-739	8	WASHER,PLAIN			
19-822 0338-19-822	1	SEAL,'O'RING			
19-823 BT07-19-823	1	DIAPHRAGM,VACUUM			
19-825 BU55-19-825	1	ROD,DIAPHRAGM L=29.75MM			
0338-19-825	1	L=30MM			
0338-19-826	1	L=31MM			
0338-19-827	1	L=30.5MM			
0338-19-828	1	L=29MM			
0338-19-829	1	L=29.5MM			
19-833 BU91-19-833	13	BOLT,CONTROL VALVE			
19-835 BT28-19-835	1	GASKET,OIL PAN NON ASBESTOS			

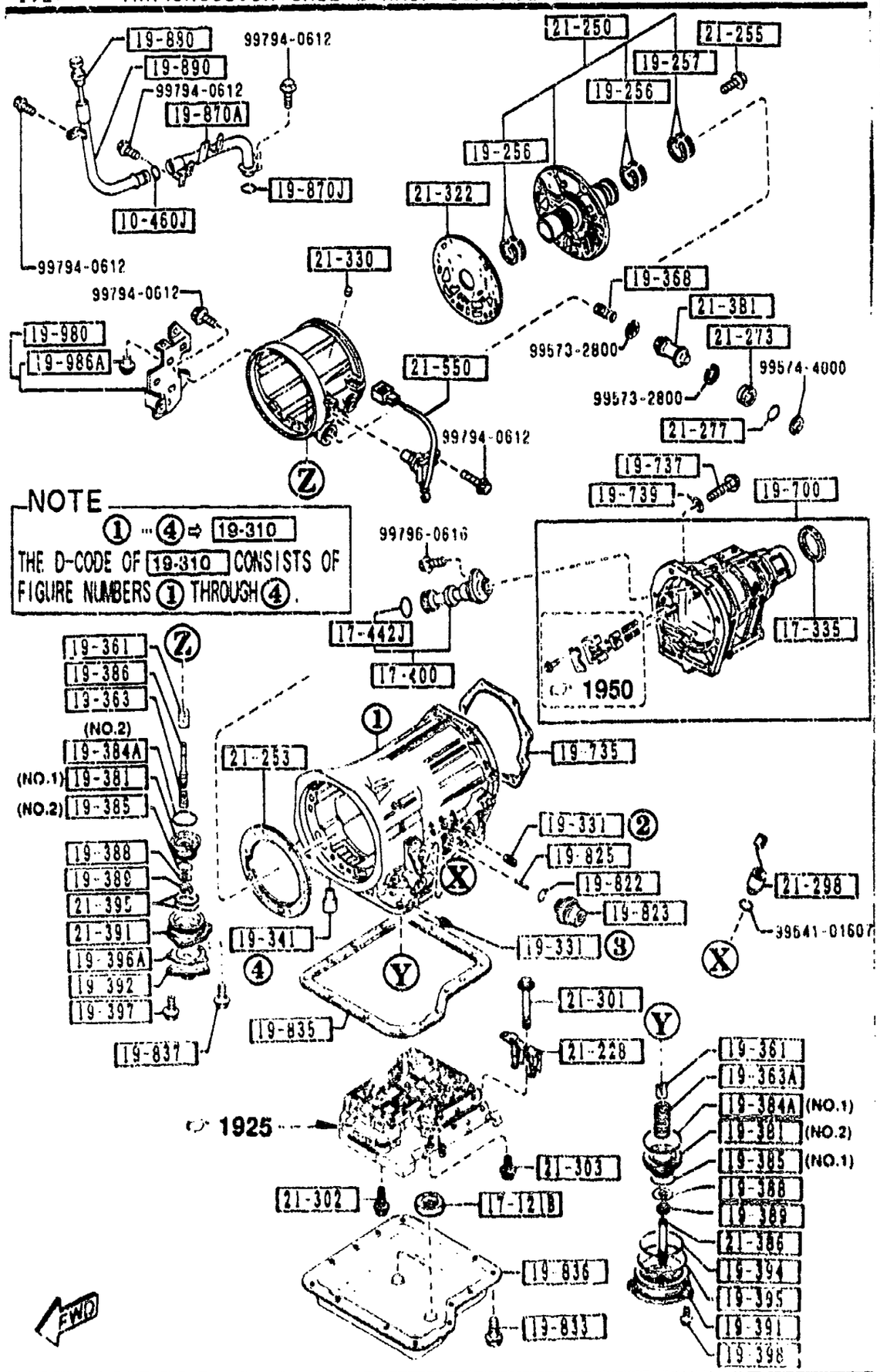

AUNA04

PART NO.	QTY	MODEL/RESTRICTION	MODEL/RESTRICTION	MODEL/RESTRICTION	FROM-TO
19-836		PAN,OIL			
BV02-19-836	1				
19-837		BOLT,OIL PAN			
0338-19-837	3				
19-870A		TUBE,FILLER			
BU55-19-870	1				
19-870J		RING,'O'			
99541-01601	1				
19-880		GAUGE,OIL LEVEL			
BV55-19-880A	1				
19-890		TUBE,OIL FILTER-UPPER			
BU55-19-890	1				
19-980		BRACKET			
BU55-19-980A	1				
19-986A		BUSH,RUBBER			
BV01-19-986	1				
21-228		HOLDER,SOCKET			
BV01-21-228A	1				
21-250		SUPPORT,DRUM			
BV01-21-250A	1				
21-253		GASKET,DRUM SUPPORT			
BU46-21-253	1	NON ASBESTOS			
21-255		BOLT			
BU01-21-255	5				
21-273		PLUG,ACCUMULATOR			
BU01-21-273	1				
21-277		RING,'O'			

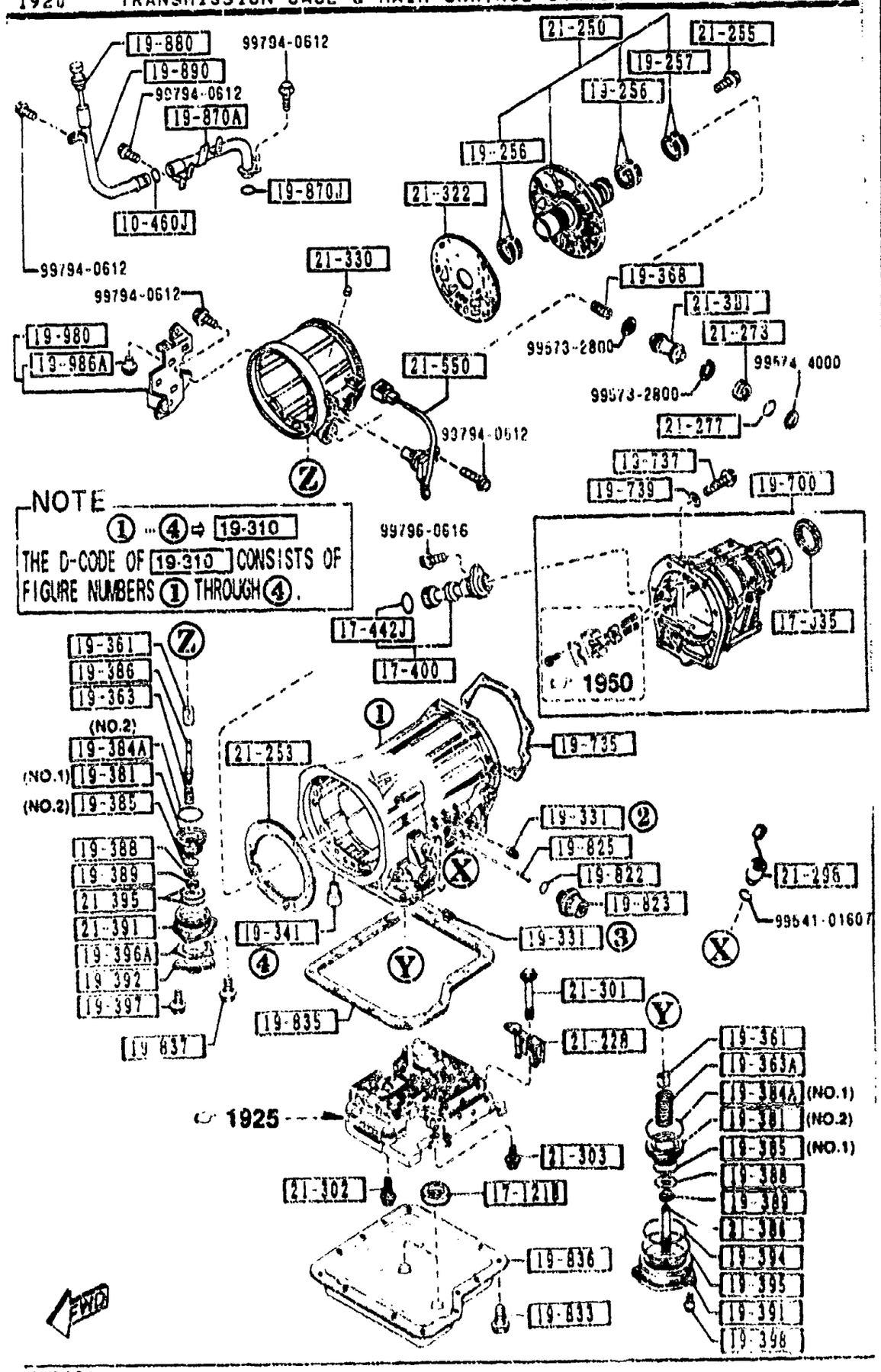

AUHA04

1920 -5 ✱ TRANSMISSION CASE & MAIN CONTROL SYSTEM (AUTOMATIC)

PART NO.	QTY	MODEL/RESTRICTION	MODEL/RESTRICTION	MODEL/RESTRICTION	FROM-TO
CONT'D					
BU01-21-277	1				
21-298		COUPLER,SOLENOID VALVE			
BV09-21-2K0	1				
21-381		PISTON,ACCUMULATOR			
N451-21-381	1				
21-301		BOLT,CONTROL VALVE			
BV01-21-301	2				
21-302		BOLT,CONTROL VALVE			
BV01-21-302	4				
21-303		BOLT,CONTROL VALVE			
BV01-21-303	1				
21-322		GASKET,O/DRIVE CASE			
BU46-21-3C2	1				
21-330		VALVE,ONE WAY			
BV01-21-330	1				
21-386		STEM,PISTON BAND			
BU01-21-386	1				
21-391		RETAINER,SERVO			
BV02-21-391	1				
21-395		RING,'O'			
BU01-21-395	2				
21-550		GENERATOR,PULSE			
N451-21-550A	1				

NOTE

① ··· ② ⇨ 19-750

THE D-CODE OF 19-750 CONSISTS OF FIGURE NUMBERS ① THROUGH ②.

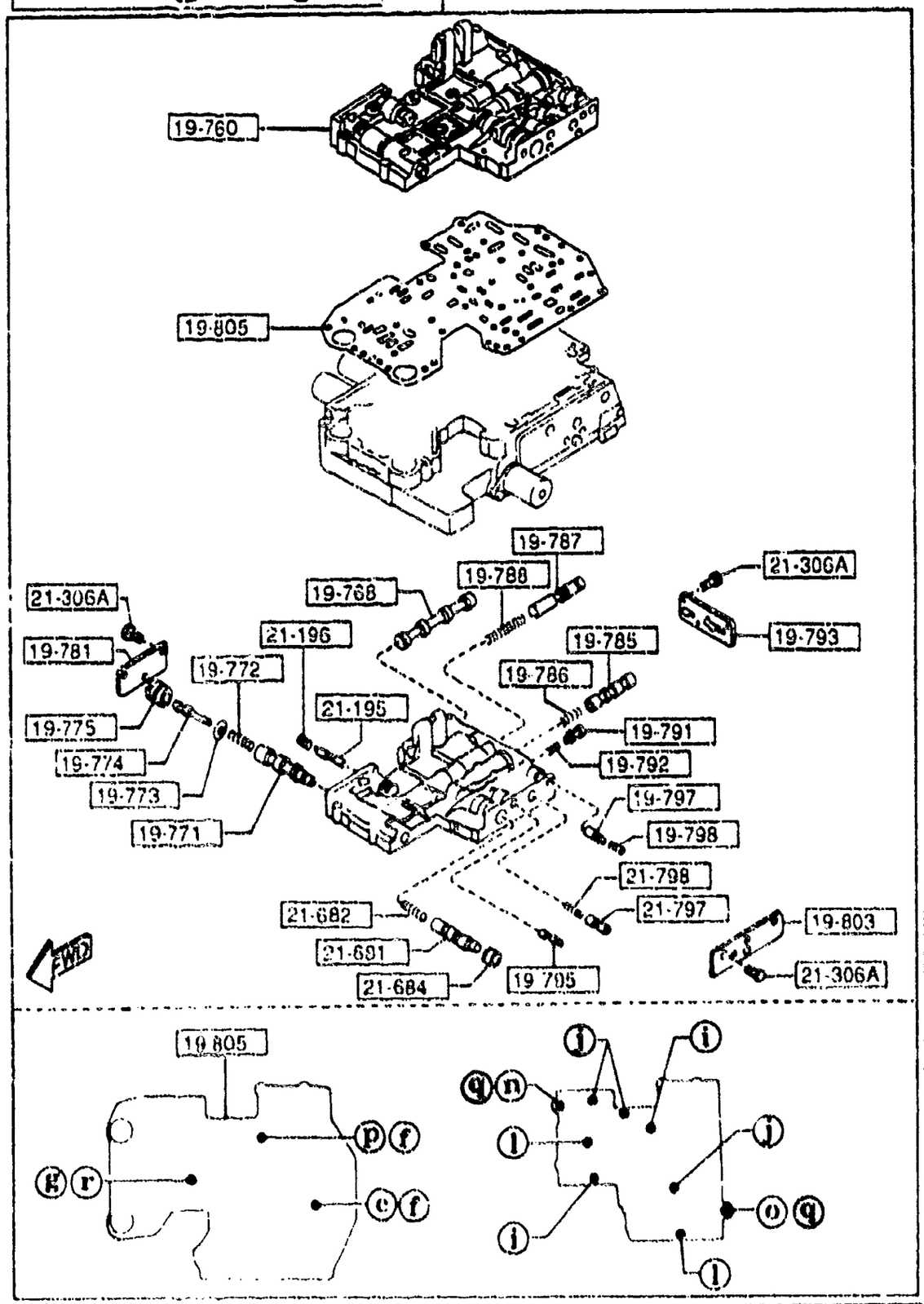

AUNA04

NOTE

③ ··· ④ ⇨ 21-3A0A

THE D-CODE OF 21-3A0A CONSISTS OF FIGURE NUMBERS ③ THROUGH ④.

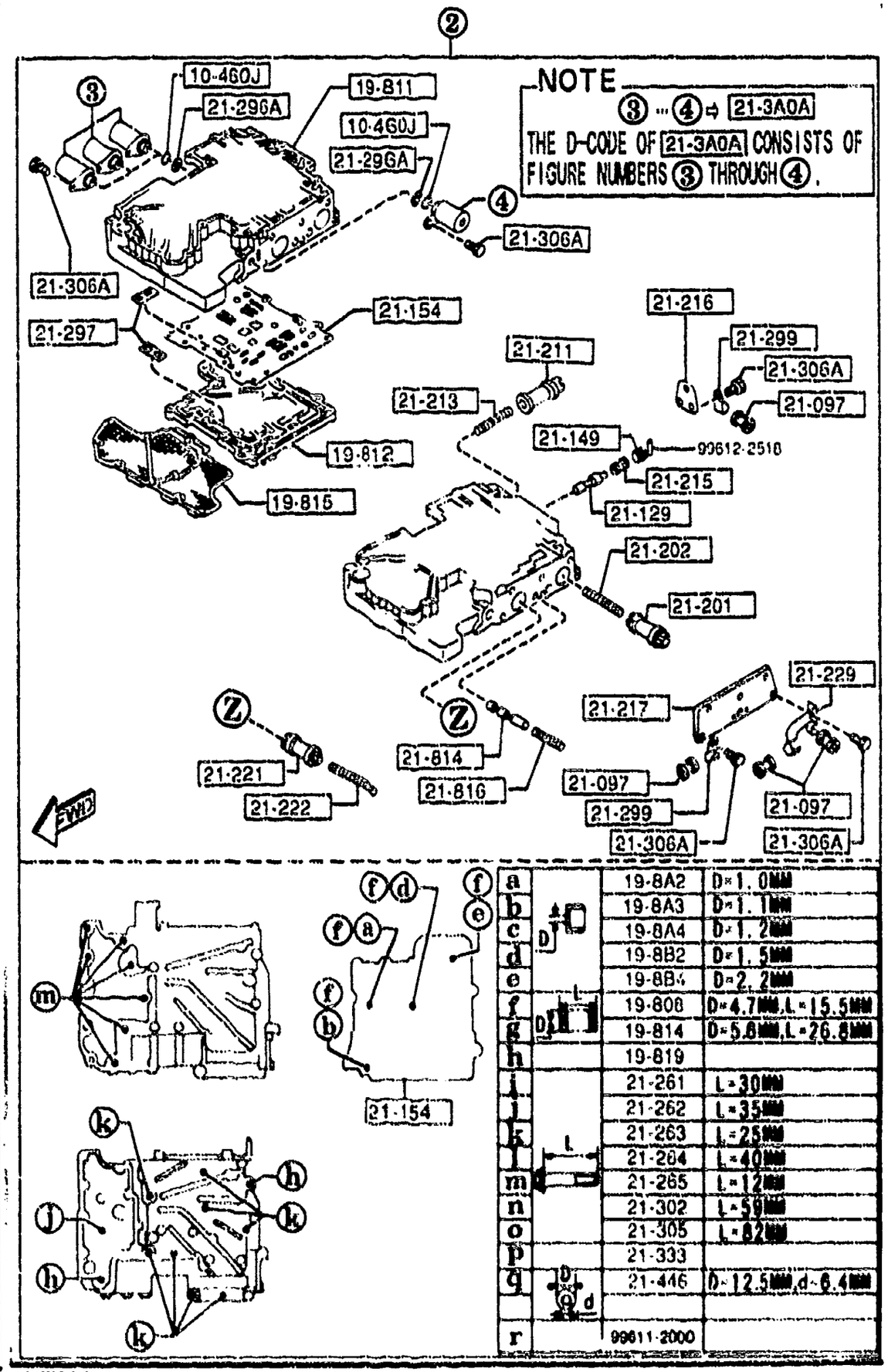

a	D	19-8A2	D=1.0MM
b		19-8A3	D=1.1MM
c		19-8A4	D=1.2MM
d		19-8B2	D=1.5MM
e		19-8B4	D=2.2MM
f	D L	19-808	D=4.7MM,L=15.5MM
g		19-814	D=5.8MM,L=26.8MM
h		19-819	
i	L	21-261	L=30MM
j		21-262	L=35MM
k		21-263	L=25MM
l		21-264	L=40MM
m		21-265	L=12MM
n		21-302	L=59MM
o		21-305	L=82MM
p		21-333	
q	D d	21-446	D=12.5MM,d=6.4MM
r		99611-2000	

AUNA04

1925 CONTROL VALVE (AUTOMATIC) (1/2)

NOTE

① ··· ② ⇨ 19-750

THE D-CODE OF 19-750 CONSISTS OF FIGURE NUMBERS ① THROUGH ②.

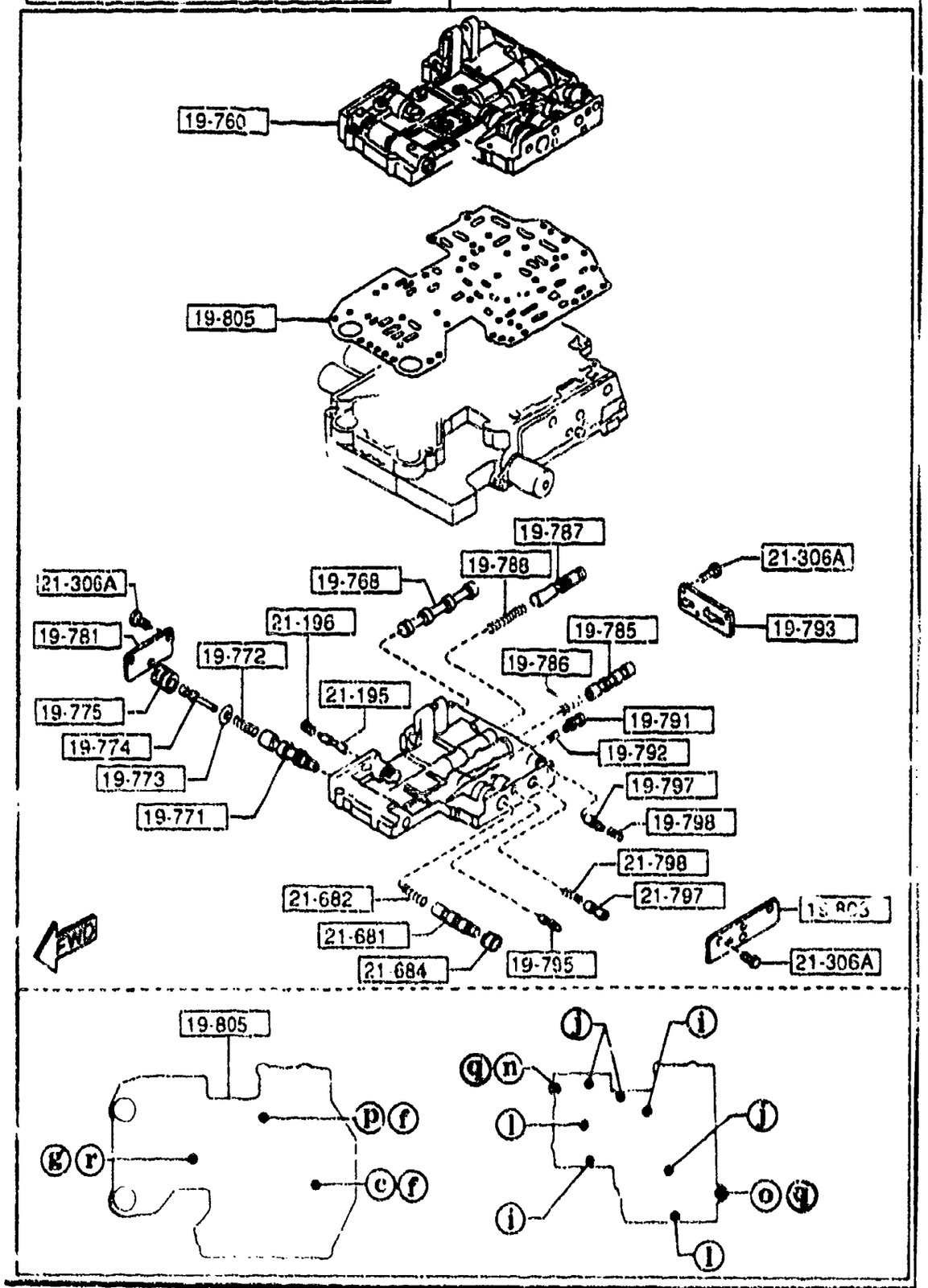

AUNA04

PART NO.	QTY	MODEL/RESTRICTION	MODEL/RESTRICTION	MODEL/RESTRICTION	FROM-TO
10-460J 99541-00707	4	RING,'O'			
19-750 N451-19-750	1	VALVE,CONTROL			
19-760 BV01-19-760F	1	BODY,CONTROL VALVE-UP			
19-768 BU91-19-768	1	VALVE,MANUAL			
19-771 BV01-19-771	1	VALVE,REGULATOR			
19-772 0338-19-772	1	SPRING,REGULATOR			
19-773 0338-19-773	1	SEAT,REGULATOR SPRING			
19-774 N451-19-774	1	PLUG,REGULATOR			
19-775 N451-19-775	1	SLEEVE,REGULATOR PLUG			
19-781 1758-19-781	1	PLATE,SIDE'D'			
19-785 BV01-19-785	1	VALVE,1-2 SHIFT			
19-786 BV11-19-527	1	SPRING,1-2 SHIFT			
19-787 N451-19-787	1	VALVE,2-3 SHIFT			
19-788 N451-19-788	1	SPRING,2-3 SHIFT			

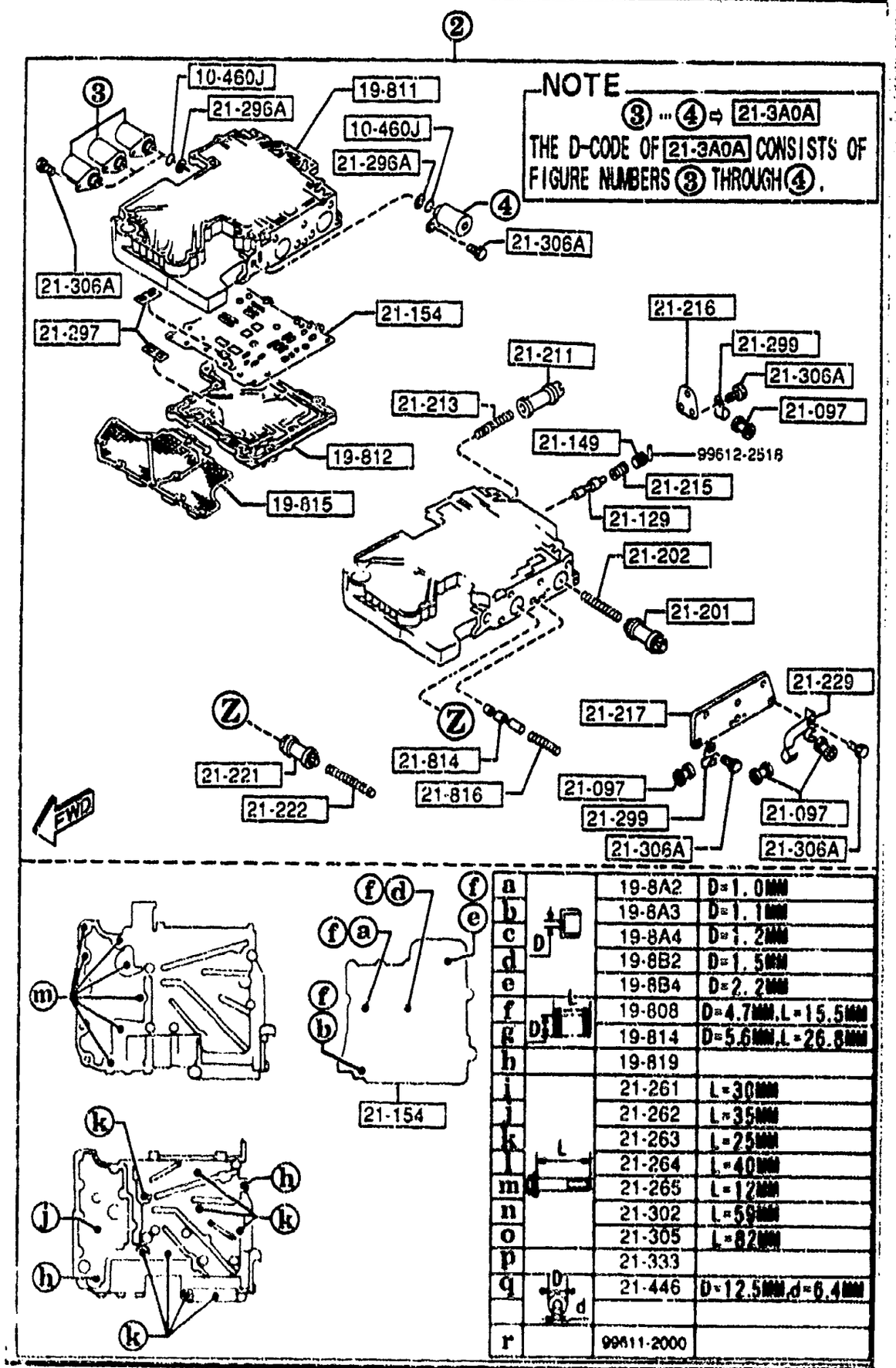

a		19-8A2	D=1.0MM
b		19-8A3	D=1.1MM
c		19-8A4	D=1.2MM
d		19-8B2	D=1.5MM
e		19-8B4	D=2.2MM
f		19-808	D=4.7MM,L=15.5MM
g		19-814	D=5.6MM,L=26.8MM
h		19-819	
i		21-261	L=30MM
j		21-262	L=35MM
k		21-263	L=25MM
l		21-264	L=40MM
m		21-265	L=12MM
n		21-302	L=59MM
o		21-305	L=82MM
p		21-333	
q		21-446	D=12.5MM,d=6.4MM
r		99611-2000	

PART NO.	QTY	MODEL/RESTRICTION	MODEL/RESTRICTION	MODEL/RESTRICTION	FROM-TO
19-791		VALVE,MODIFIER			
0338-19-791A	1				
19-792		SPRING,MODIFIER			
BV01-19-792	1				
19-793		PLATE,SIDE'A'			
BV01-19-793	1				
19-795		VALVE,THROTTLE			
N451-19-795	1				
19-797		VALVE,THROTTLE BACK-UP			
BV01-19-797A	1				
19-798		SPRING,THROTTLE BACK-UP			
N451-19-798	1				
19-8A2		VALVE,ORIFICE CHECK			
BV01-19-8A2	1				
19-8A3		VALVE,ORIFICE CHECK			
BV01-19-8A3	1				
19-8A4		VALVE,ORIFICE CHECK			
BV01-19-8A4	1				
19-8B2		VALVE,ORIFICE CHECK			
BV01-19-8B2	1				
19-8B4		VALVE,ORIFICE CHECK			
BV01-19-8B4	1				
19-803		PLATE,SIDE'B'			
BV01-19-803	1				
19-805		PLATE,SEPARATOR			
BV17-19-805	1				
19-808		SPRING			
0338-19-808	6				

NOTE

① ~ ② ⇨ 19-750

THE D-CODE OF 19-750 CONSISTS OF FIGURE NUMBERS ① THROUGH ②.

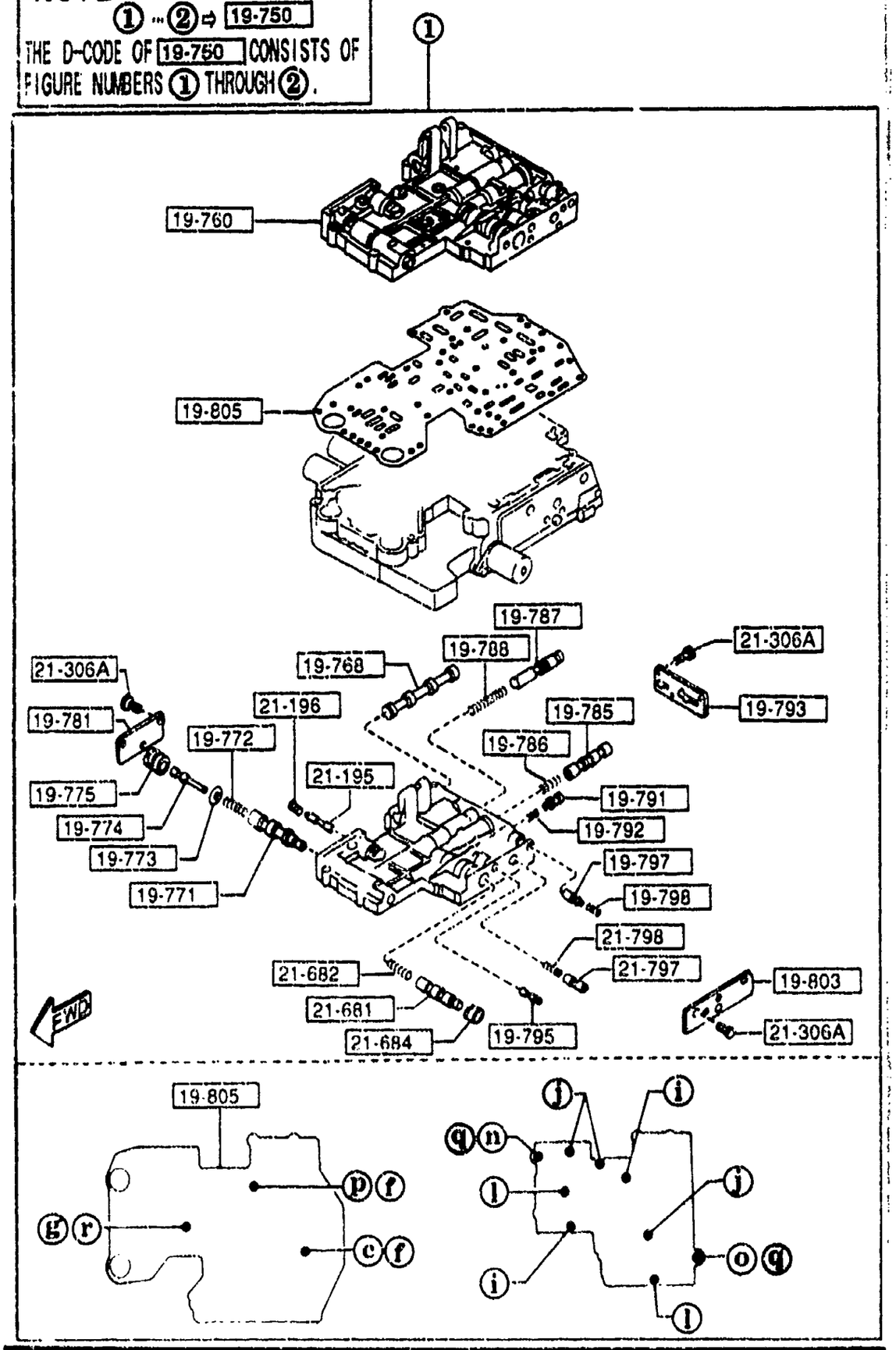

PART NO.	QTY	MODEL/RESTRICTION	MODEL/RESTRICTION	MODEL/RESTRICTION	FROM-TO
19-811		BODY,VALVE LWR			
BV01-19-811C	1				-4201
BV02-19-811C	1				4201-
19-812		COVER,VALVE BODY			
BV01-19-812A	1				
19-814		SPRING			
0338-19-814	1				
19-815		STRAINER,OIL			
BV01-19-815	1				
19-819		NUT			
BV01-19-819	2				
21-097		PROTECTOR			
FU01-21-097	4				
21-129		VALVE,1-2 REDUCING			
BV01-21-129	1				
21-149		PLUG,STOPPER			
BV01-21-149A	1				
21-154		PLATE,SEPARATOR			
N451-21-154	1				
21-195		VALVE,REDUCING			
BV01-21-195	1				
21-196		SPRING,REDUCING			
BV01-21-196	1				
21-201		PISTON,ACCUM			
N451-21-201	1				
21-202		SPRING,ACCUM N-R			
BV06-21-202	1				

4201 NA3###-511601

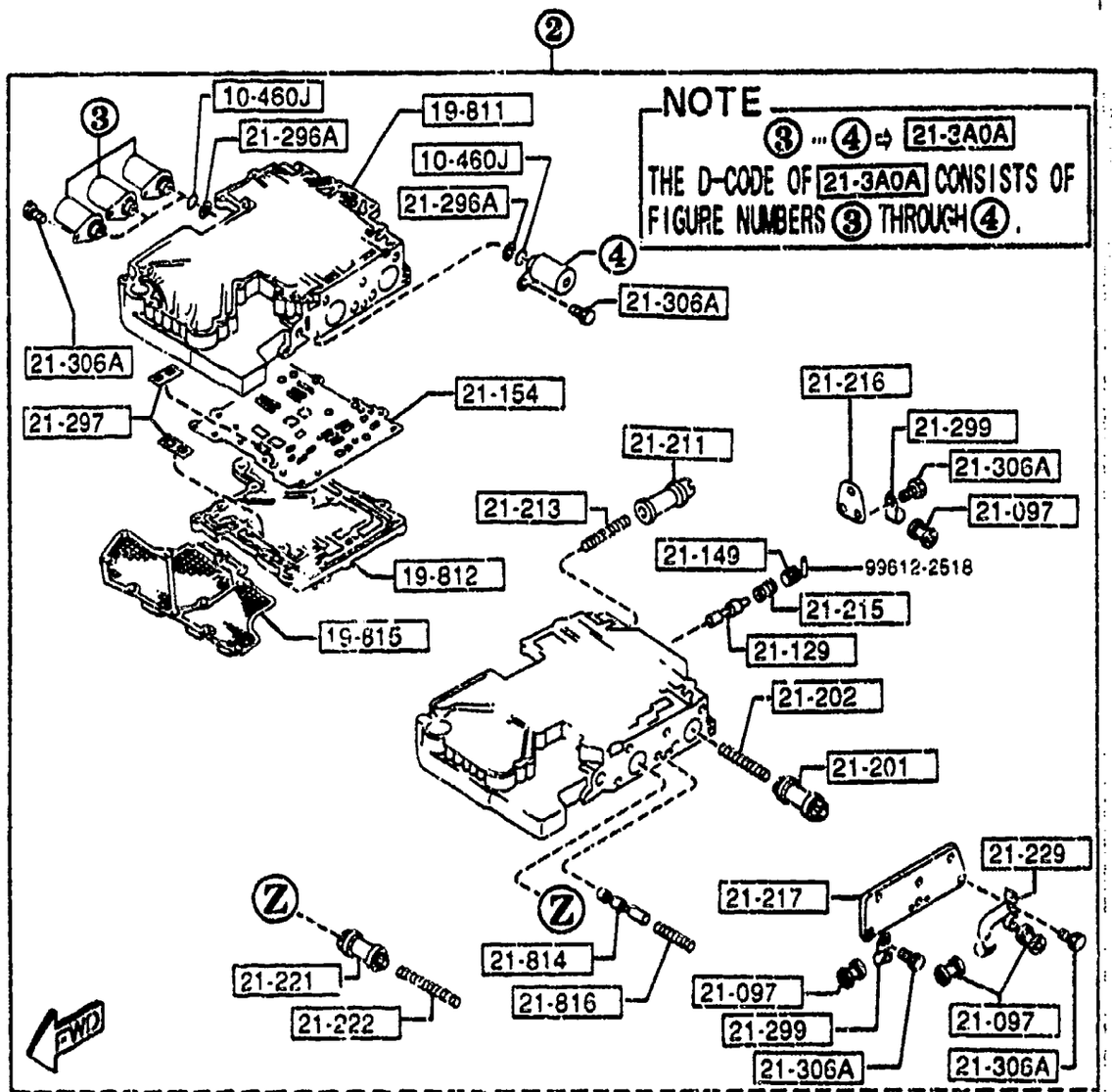

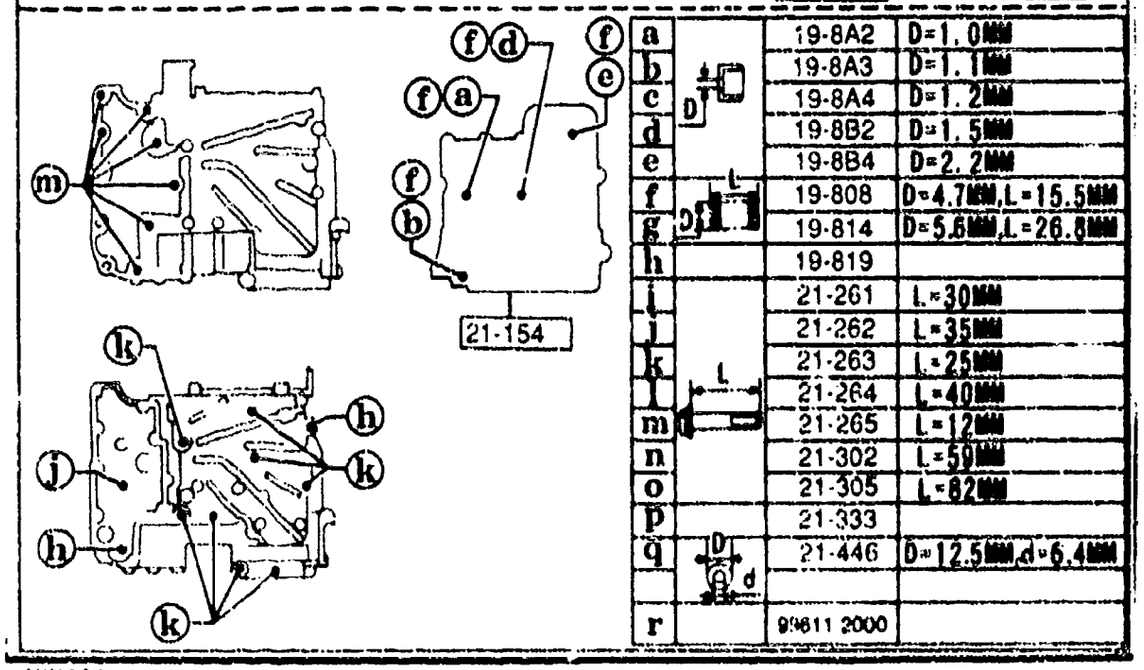

AUNA01

PART NO.	QTY	MODEL/RESTRICTION	MODEL/RESTRICTION	MODEL/RESTRICTION	FROM-TO
21-211		PISTON,N/D ACCUM			
N451-21-211	1				
21-213		SPRING,N/D ACCUM			
BV01-21-213	1				
21-215		SPRING,BY-PASS			
BV02-21-215	1				
21-216		PLATE'E',SIDE			
BV01-21-216	1				
21-217		PLATE'F',SIDE			
BV01-21-217	1				
21-221		PISTON,1/2 ACCUM			
N451-21-221	1				
21-222		SPRING,ACCUM 1-2			
BV02-21-222B	1				
21-229		CLIP			
BV01-21-229A	1				
21-261		BOLT			
N451-21-261	2				
21-262		BOLT			
N451-21-262	4				
21-263		BOLT			
N451-21-263	8				
21-264		BOLT			
N451-21-264	2				
21-265		BOLT			
FU01-21-265C	7				
21-296A		STRAINER,OIL			
BV01-21-296	4				

NOTE

① ··· ② ⇨ 19-750

THE D-CODE OF 19-750 CONSISTS OF FIGURE NUMBERS ① THROUGH ②.

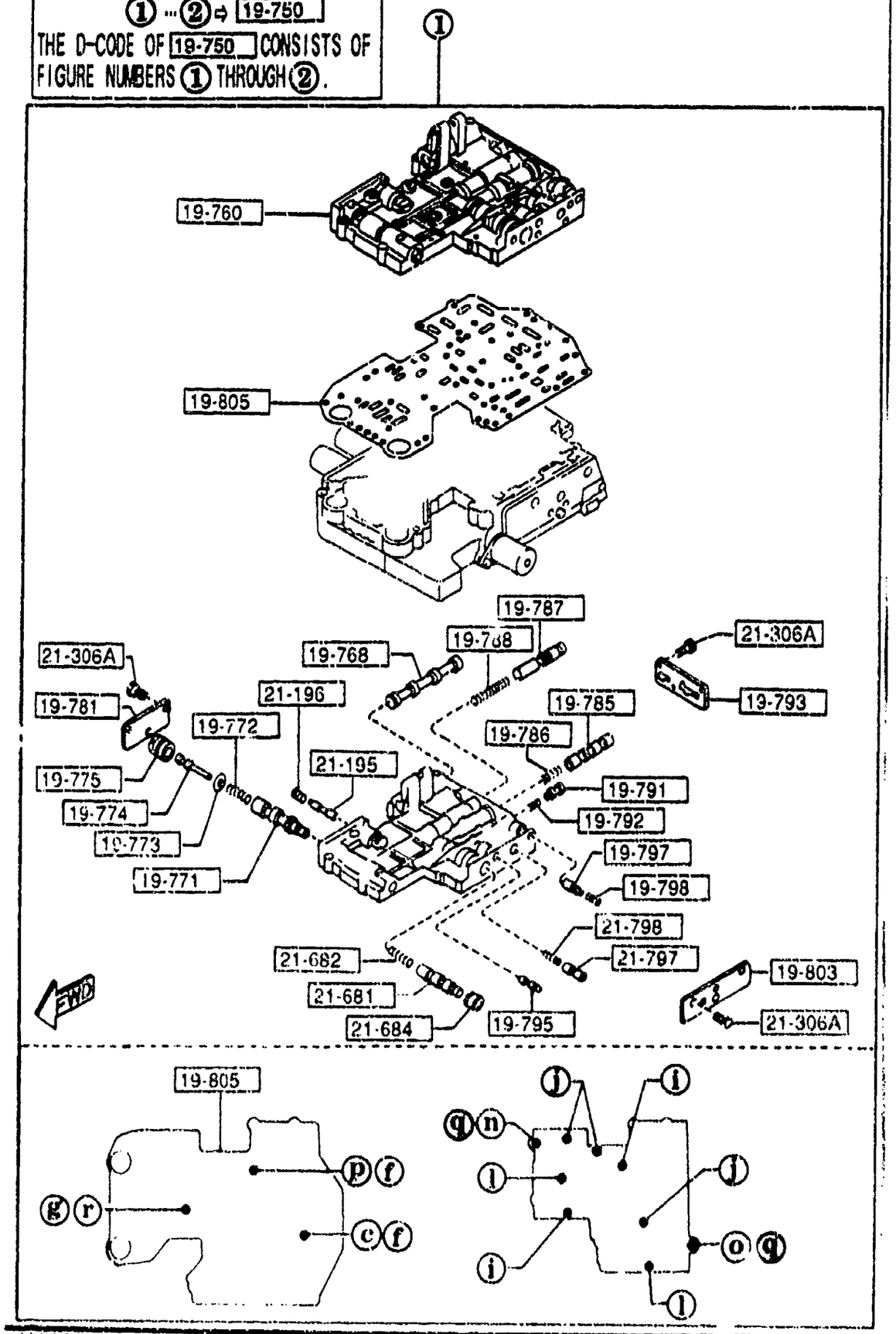

PART NO.	QTY	MODEL/RESTRICTION	MODEL/RESTRICTION	MODEL/RESTRICTION	FROM-TO
21-297		STRAINER,INNER			
BV01-21-297	2				
21-299		CLIP			
BV01-21-299	2				
21-3A0A		VALVE,SOLENOID NO1			
BV01-21-3A0A	1				
21-302		BOLT,CONTROL VALVE			
BV02-21-302	1				
21-305		BOLT			
BV01-21-305B	1				
21-306A		BOLT			
BV01-21-306	22				
21-333		VALVE,ONE WAY			
BV01-21-333	1				
21-446		WASHER,DISHED			
BV01-21-446	2				
21-681		VALVE,SHIFT 3-4			
BV01-21-681	1				
21-682		SPRING,3-4 SHIFT			
BV01-21-682	1				
21-684		VALVE,3-4 SHIFT-COAST			
BV01-21-684	1				
21-797		VALVE,CONTROL BACK UP			
BV01-21-797	1				
21-798		SPRING,BACK UP			
BV01-21-798	1				
21-814		SPRING,3-2 TIMING			
BV01-21-814	1				

1925 CONTROL VALVE (AUTOMATIC) (2/2)

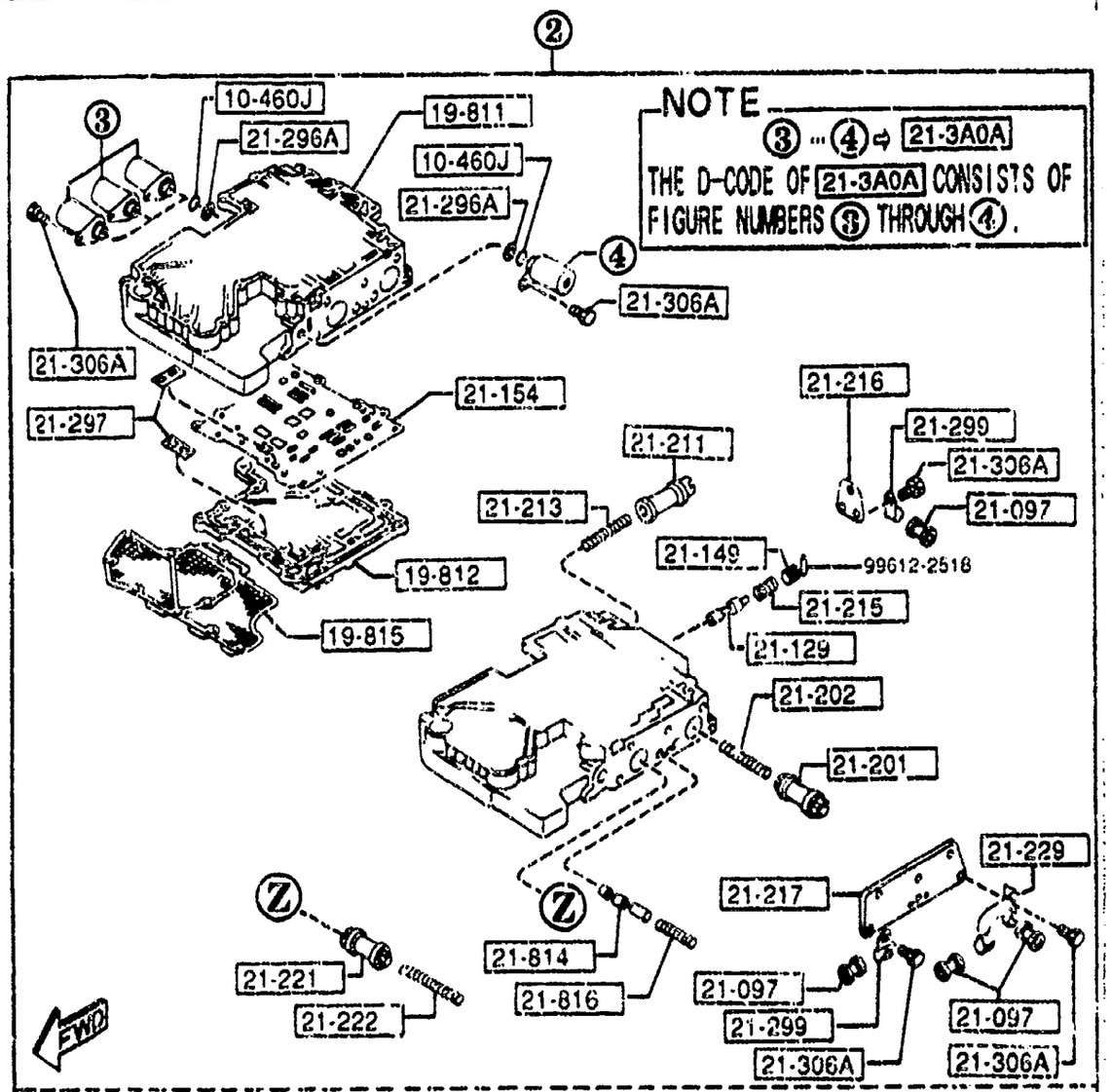

NOTE

③ ··· ④ ⇨ 21-3A0A

THE D-CODE OF 21-3A0A CONSISTS OF FIGURE NUMBERS ③ THROUGH ④.

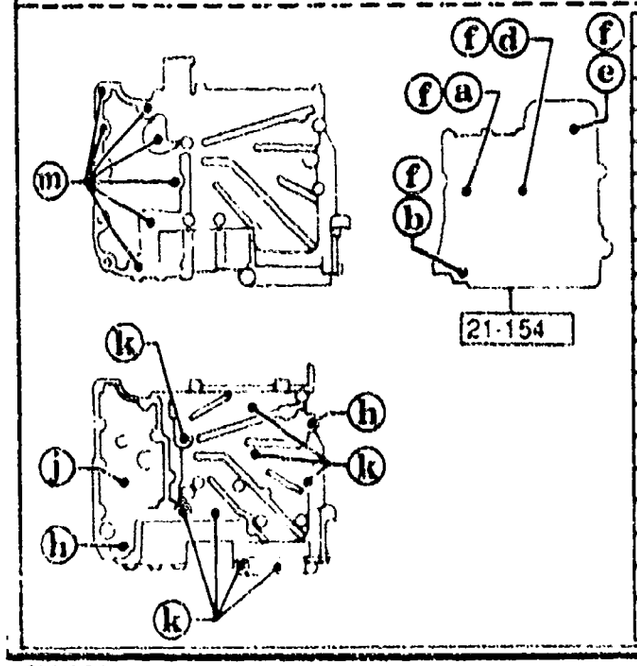

a	D	19-8A2	D=1.0MM
b		19-8A3	D=1.1MM
c		19-8A4	D=1.2MM
d		19-8B2	D=1.5MM
e		19-8B4	D=2.2MM
f	D L	19-808	D=4.7MM,L=15.5MM
g		19-814	D=5.6MM,L=26.8MM
h		19-819	
i	L	21-261	L=30MM
j		21-262	L=35MM
k		21-263	L=25MM
l		21-264	L=40MM
m		21-265	L=12MM
n		21-302	L=59MM
o		21-305	L=82MM
p		21-333	
q	D d	21-446	D=12.5MM,d=6.4MM
r		99611-2000	

PART NO.	QTY	MODEL/RESTRICTION	MODEL/RESTRICTION	MODEL/RESTRICTION	FROM-TO
21-816		SPRING,3-2 TIMING			
BV01-21-816	1				

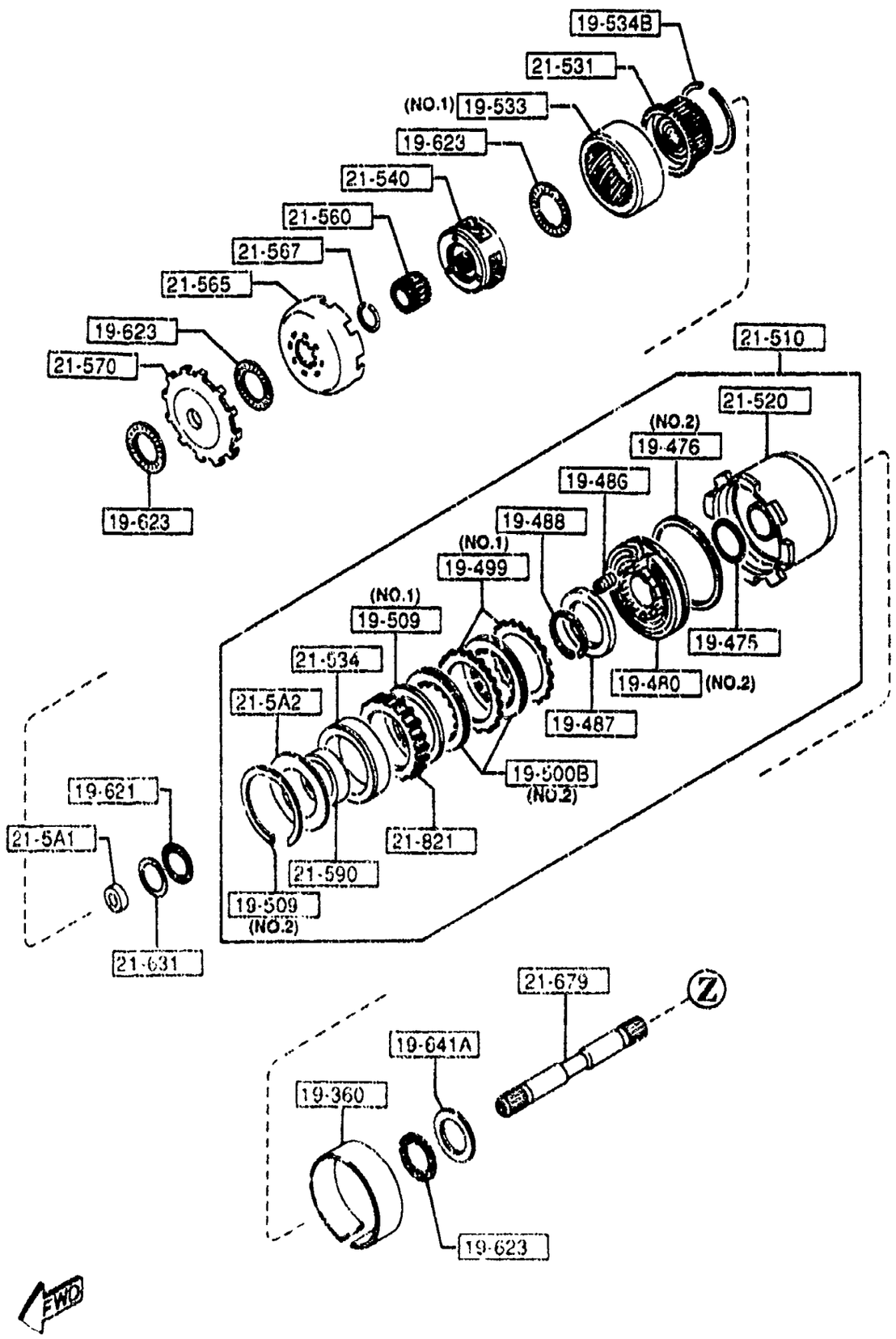
19-534B
21-531
(NO.1) 19-533
19-623
21-540
21-560
21-567
21-565
19-623
21-570
19-623
21-510
21-520
(NO.2)
19-476
19-486
19-488
(NO.1)
19-499
(NO.1)
19-509
21-534
21-542
19-475
19-480 (NO.2)
19-487
19-500B
(NO.2)
21-821
21-590
19-509
(NO.2)
19-621
21-541
21-631
21-679
19-641A
19-360
19-623

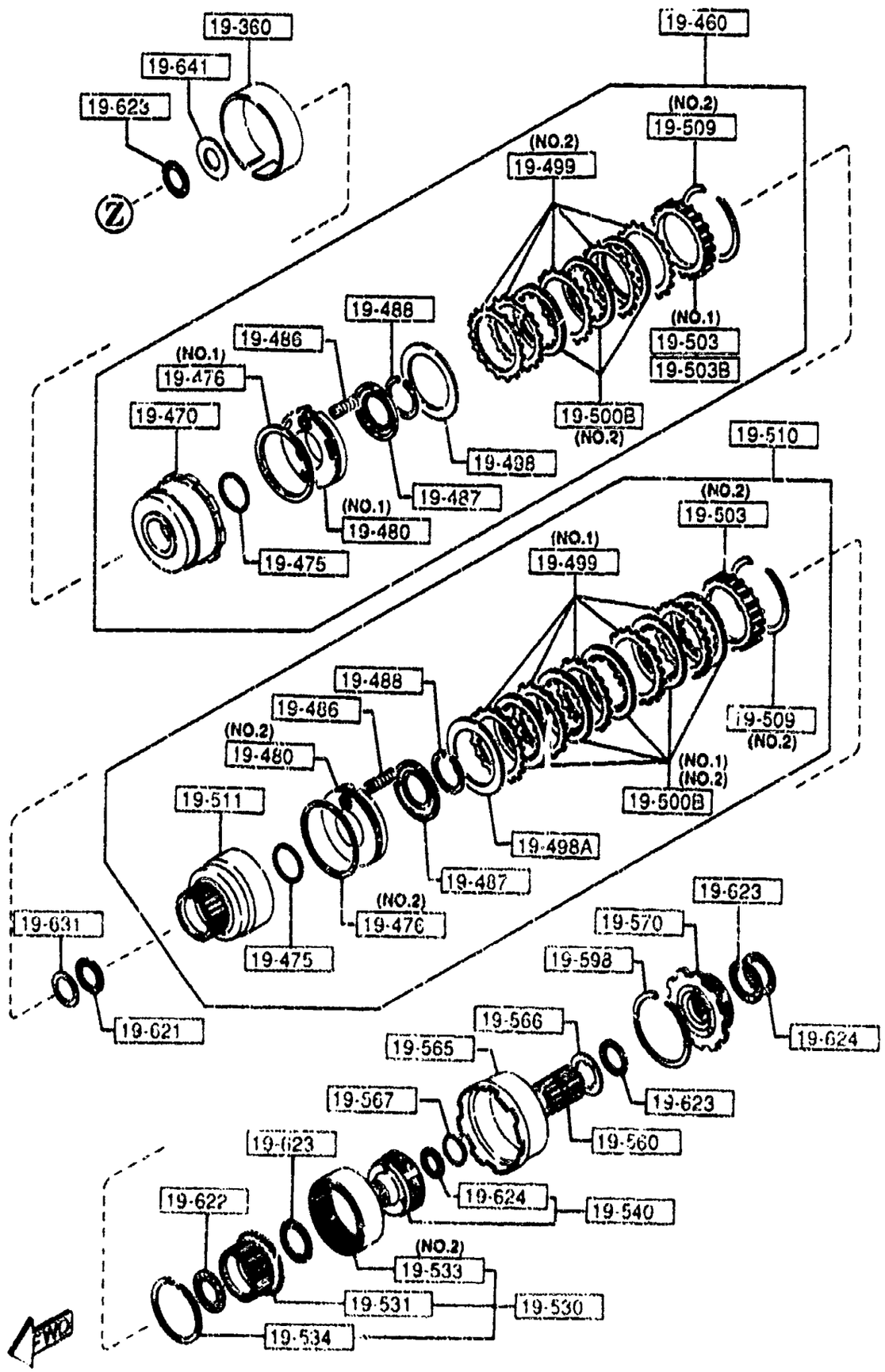
19-360
19-641
19-623
19-460
(NO.2)
19-509
(NO.2)
19-499
19-488
19-486
(NO.1)
19-476
19-470
(NO.1)
19-503
19-503B
19-500B
(NO.2)
19-498
19-487
(NO.1)
19-480
19-475
19-510
(NO.2)
19-503
(NO.1)
19-499
19-488
19-486
(NO.2)
19-480
19-509
(NO.2)
(NO.1)
(NO.2)
19-500B
19-511
19-498A
19-487
(NO.2)
19-476
19-475
19-631
19-621
19-623
19-570
19-598
19-624
19-566
19-565
19-623
19-567
19-560
19-623
19-624
19-540
19-622
(NO.2)
19-533
19-531
19-530
19-534

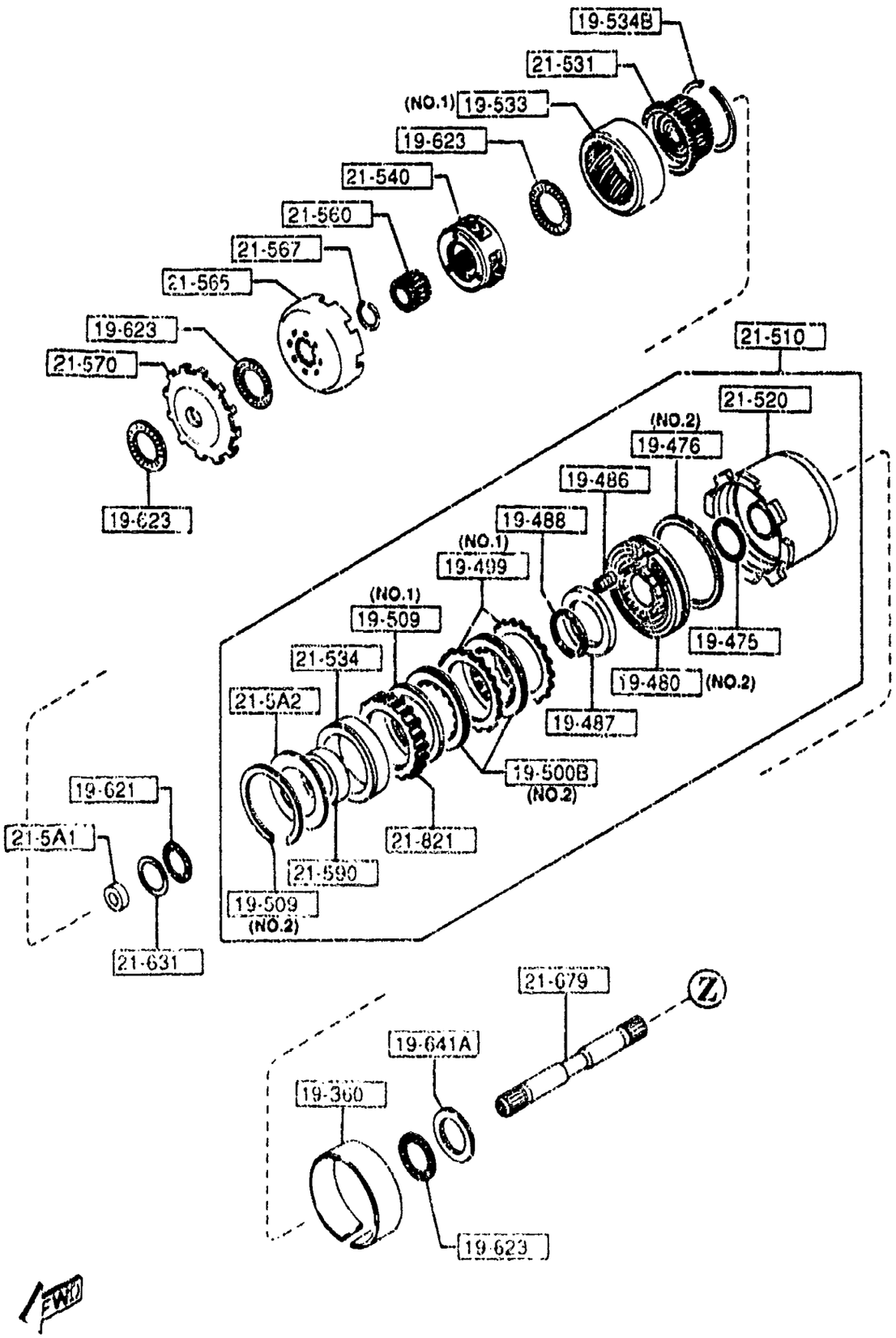

PART NO.	QTY	MODEL/RESTRICTION	MODEL/RESTRICTION	MODEL/RESTRICTION	FROM-TO
19-360		BAND,BRAKE			
0338-19-360B	2				
19-460		CLUTCH,FRONT			
N451-19-460	1				
19-470		DRUM,CLUTCH			
N451-19-470	1				
19-475		SEAL,'O'RING			
0338-19-475	3				
19-476		SEAL,LATHE CUT			
BV01-19-476	1	(ILLUST. NO.1)			
0338-19-476	2	(ILLUST. NO.2)			
19-480		PISTON,CLUTCH			
BV01-19-480	1	(ILLUST. NO.1)			
0338-19-480	2	(ILLUST. NO.2)			
19-486		SPRING,PISTON RETURN			
0338-19-486	25				
19-487		RETAINER,SPRING			
0338-19-487	3				
19-488		RING,SNAP			
0338-19-488	3				
19-498		PLATE,DISHED			
0338-19-498	1				
19-498A		PLATE,DISHED			
BU17-19-498	1				
19-499		PLATE,DRIVEN			
FT01-19-499	7	(ILLUST. NO.1)			
0338-19-499	5	(ILLUST. NO.2)			
19-500B		PLATE,DRIVEN			

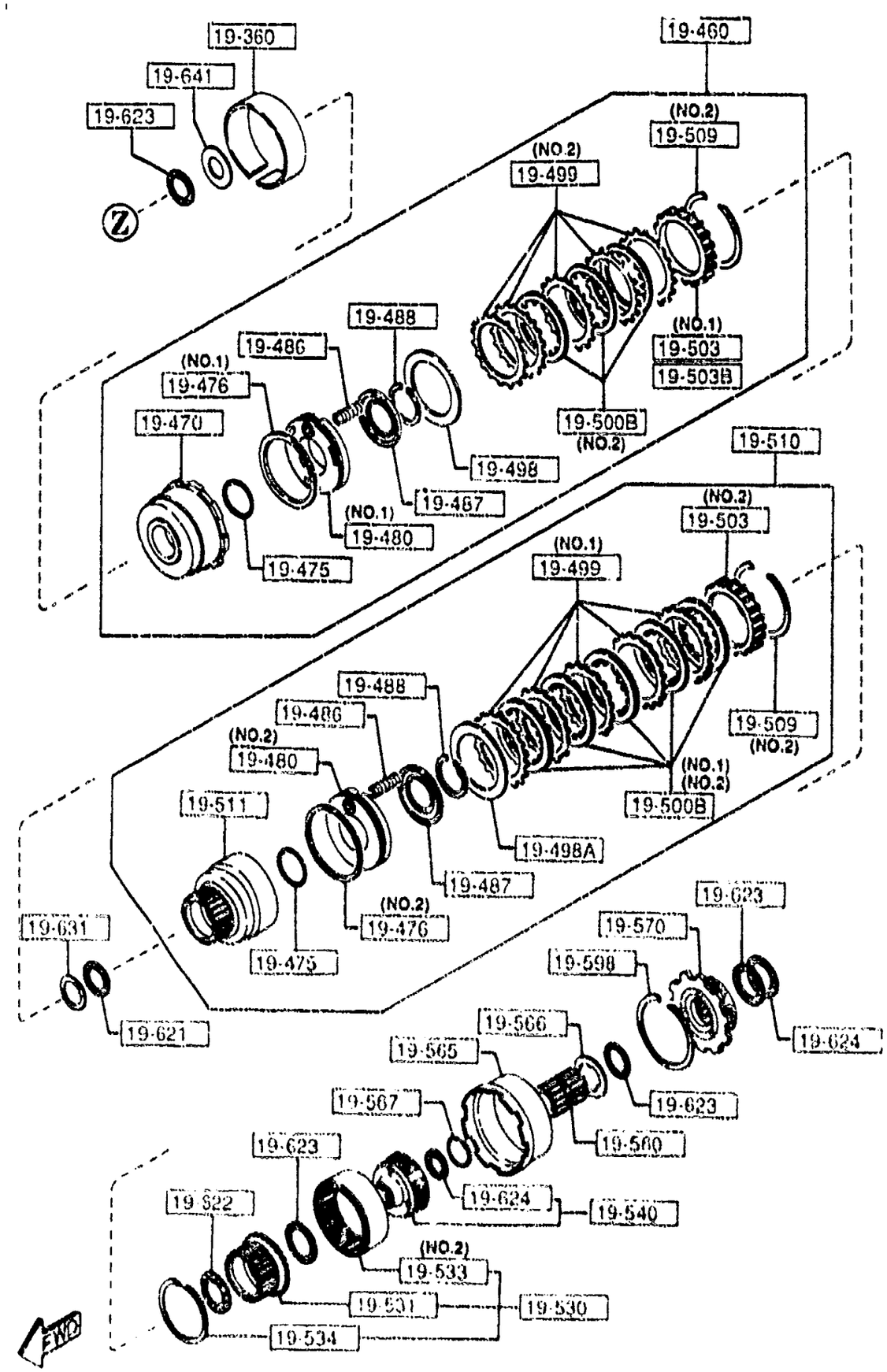

AUNA04

PART NO.	QTY	MODEL/RESTRICTION	MODEL/RESTRICTION	MODEL/RESTRICTION	FROM-TO
CONT'D					
BU55-19-5J0	5	(ILLUST. NO.1)			
BU17-19-500A	10	(ILLUST. NO.2)			
19-503		PLATE,RETAINING			
0338-19-503	1	T=10.2MM (ILLUST. NO.2)			
BU17-19-504	1	T=9.4MM (ILLUST. NO.2)			
BU17-19-505	1	T=9.6MM (ILLUST. NO.2)			
N451-19-505	1	T=6.4MM (ILLUST. NO.1)			
BU17-19-506	1	T=9.8MM (ILLUST. NO.2)			
BU17-19-507	1	T=10MM (ILLUST. NO.2)			
3959-19-507	1	T=5.8MM (ILLUST. NO.1)			
BU17-19-508	1	T=10.2MM (ILLUST. NO.2)			
3959-19-508	1	T=6MM (ILLUST. NO.1)			
BU17-19-509	1	T=10.4MM (ILLUST. NO.2)			
3959-19-509	1	T=6.2MM (ILLUST. NO.1)			
19-503B		PLATE,RETAINING			
BV02-19-506	1	T=6.6MM			
BV02-19-507	1	T=6.8MM			
BV02-19-508	1	T=7MM			
19-509		RING,SNAP			
BV01-19-509	1	(ILLUST. NO.1)			
0338-19-509	3	(ILLUST. NO.2)			
19-510		CLUTCH,REAR			
BU17-19-510A	1				
19-511		DRUM,REAR CLUTCH			
1758-19-511A	1				

1930 CLUTCHES & PLANETARY GEARS (AUTOMATIC) (1/2)

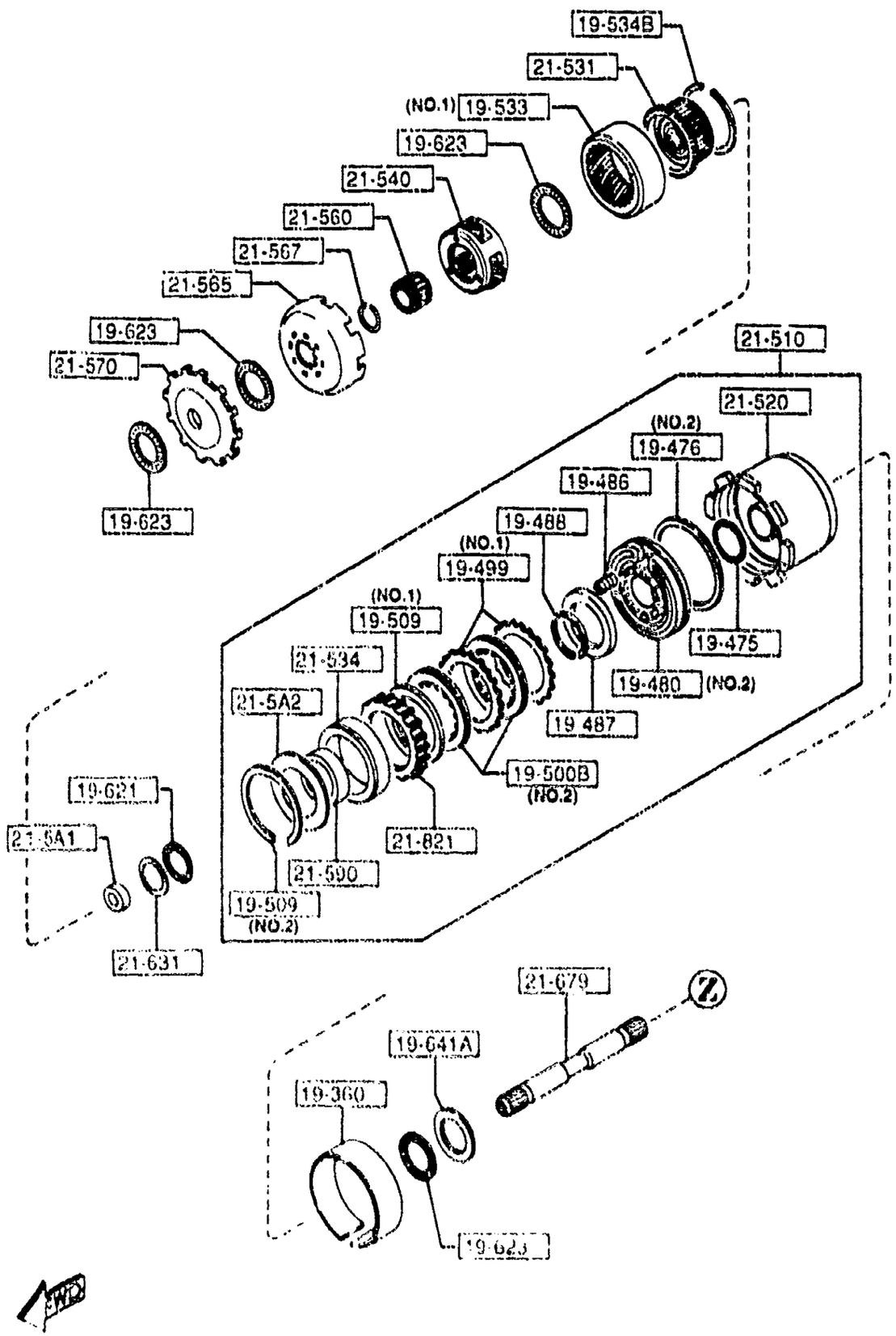

PART NO.	QTY	MODEL/RESTRICTION	MODEL/RESTRICTION	MODEL/RESTRICTION	FROM-TO
19-530		HUB,REAR CLUTCH			
0338-19-530	1				
19-531		HUB,REAR CLUTCH			
0338-19-531	1				
19-533		GEAR,INTERNAL			
BV01-19-533	1	(ILLUST. NO.1)			
0338-19-533A	1	(ILLUST. NO.2)			
19-534		RING,SNAP			
0338-19-534	1				
19-534B		RING,SNAP			
BU03-19-534	1				
19-540		CARRIER,FRONT			
0338-19-540	1				
19-560		GEAR,SUN			
0338-19-560	1				
19-565		SHELL,CONNECTING			
BU27-19-565	1				
19-566		RACE,SHELL BEARING			
0338-19-566	1				
19-567		RING,SNAP			
0338-19-567	1				
19-570		CARRIER,REAR			
0338-19-570	1				
19-598		RING,SNAP			
0338-19-598	1				
19-621		BEARING,NEEDLE			
0338-19-621	2				

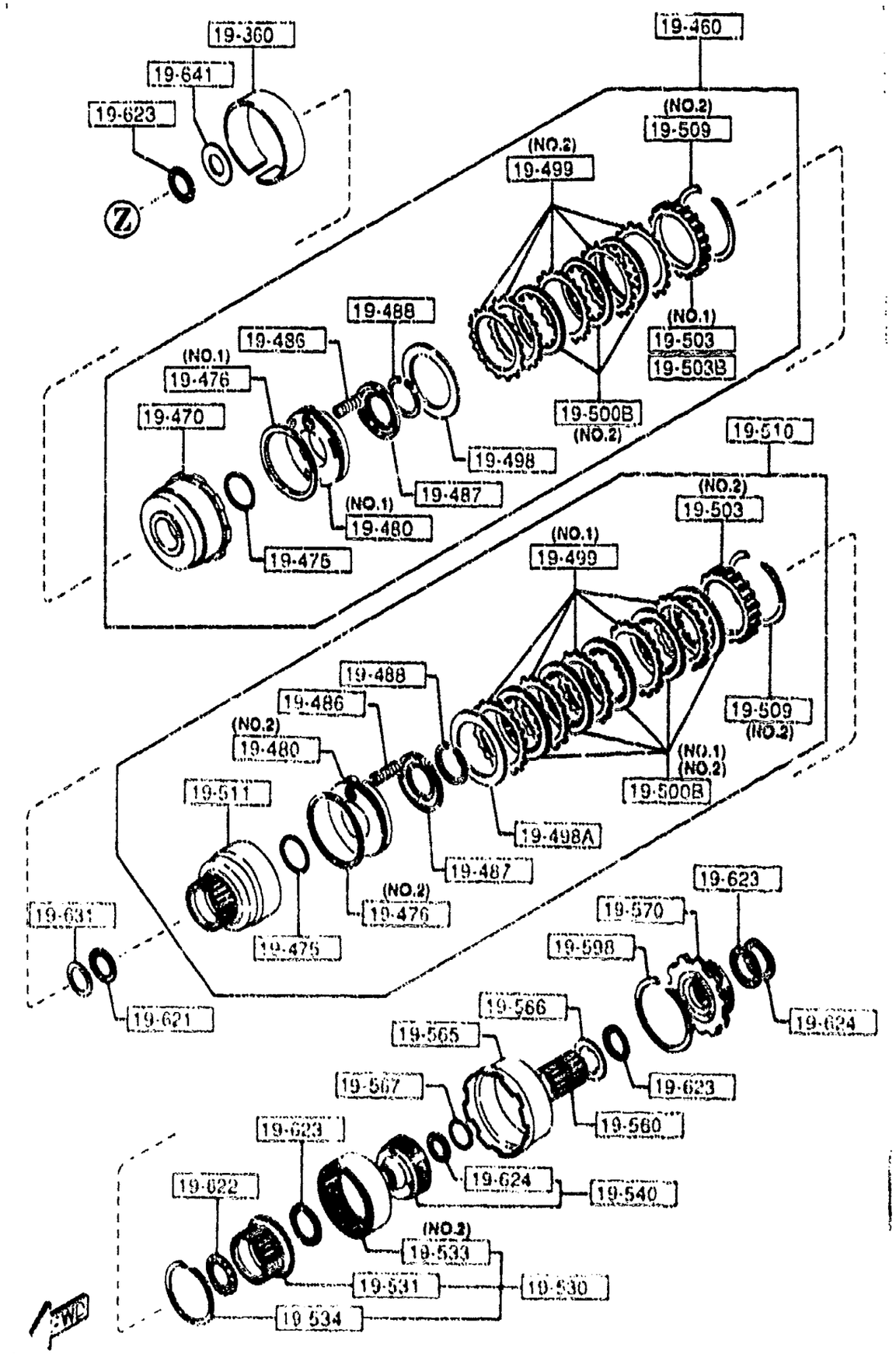

AUNA04

1930 -4 CLUTCHES & PLANETARY GEARS (AUTOMATIC)

PART NO.	QTY	MODEL/RESTRICTION	MODEL/RESTRICTION	MODEL/RESTRICTION	FROM-TO
19-622		BEARING,NEEDLE			
BU91-19-622	1	D=34.7MM			
FT01-19-622	1	D=33.8MM			
19-623		BEARING,NEEDLE			
0338-19-623A	8				
19-624		BEARING,NEEDLE			
0338-19-624	2				
19-631		RACE,BRG.PUMP COVER			
0338-19-631	1	T=1.2MM			
0338-19-632	1	T=1.4MM			
0338-19-633	1	T=1.6MM			
0338-19-634	1	T=1.8MM			
0338-19-635	1	T=2MM			
0338-19-636	1	T=2.2MM			
19-641		WASHER,FRONT CLUTCH			
BV01-19-6C1	1	T=0.8MM			
BV01-19-6C2	1	T=1MM			
BV01-19-6C3	1	T=1.2MM			
BV01-19-6C4	1	T=1.4MM			
BV01-19-6C5	1	T=1.6MM			
BV01-19-6C6	1	T=1.8MM			
BV01-19-6C7	1	T=2MM			
BV01-19-6C8	1	T=2.2MM			

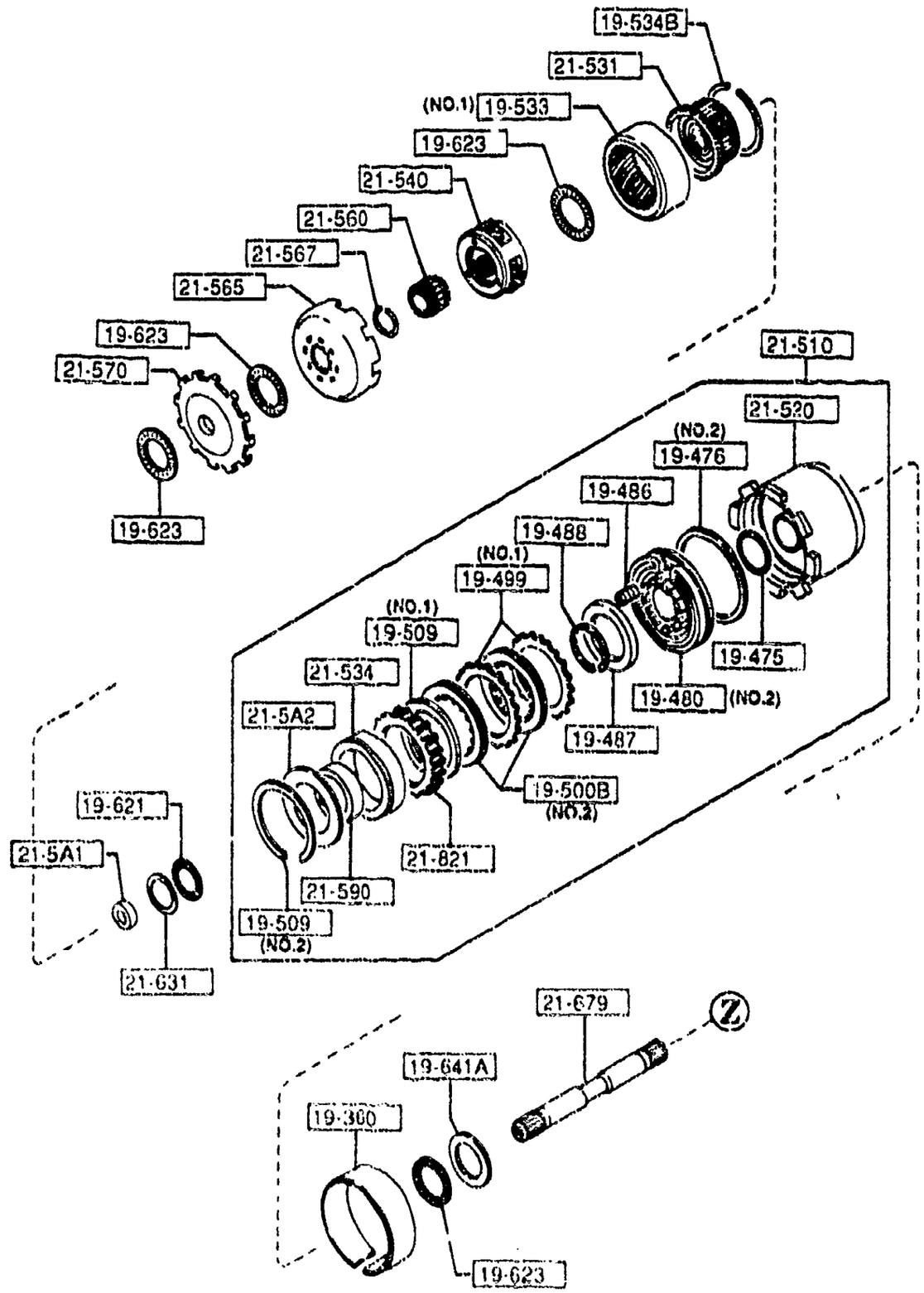

PART NO.	QTY	MODEL/RESTRICTION	MODEL/RESTRICTION	MODEL/RESTRICTION	FROM-TO
19-641A		WASHER			
BV03-19-6C1	1	T=0.8MM			
BV03-19-6C2	1	T=1MM			
BV03-19-6C3	1	T=1.2MM			
BV03-19-6C4	1	T=1.4MM			
BV03-19-6C5	1	T=1.6MM			
BV03-19-6C6	1	T=1.8MM			
BV03-19-6C7	1	T=2MM			
BV03-19-6C8	1	T=2.2MM			
21-5A1		SLEEVE,SEAL-O.D.CARRIER			
BV01-21-5A1	1				
21-5A2		RACE,SIDE-ONE WAY CLUTCH			
BV01-21-5A2	1	T=0.6MM			
BV01-21-5A3	1	T=0.8MM			
BV01-21-5A4	1	T=1MM			
BV01-21-5A5	1	T=1.2MM			
BV01-21-535	1	T=0.4MM			
21-510		CLUTCH,DIRECT			
BV01-21-510B	1				
21-520		DRUM,DIRECT			
BV01-21-530C	1				
21-531		HUB,O/DRIVE CLUTCH			
BV01-21-536	1				
21-534		RACE,OUTER-ONE WAY CLUTCH			
BV01-21-534	1				

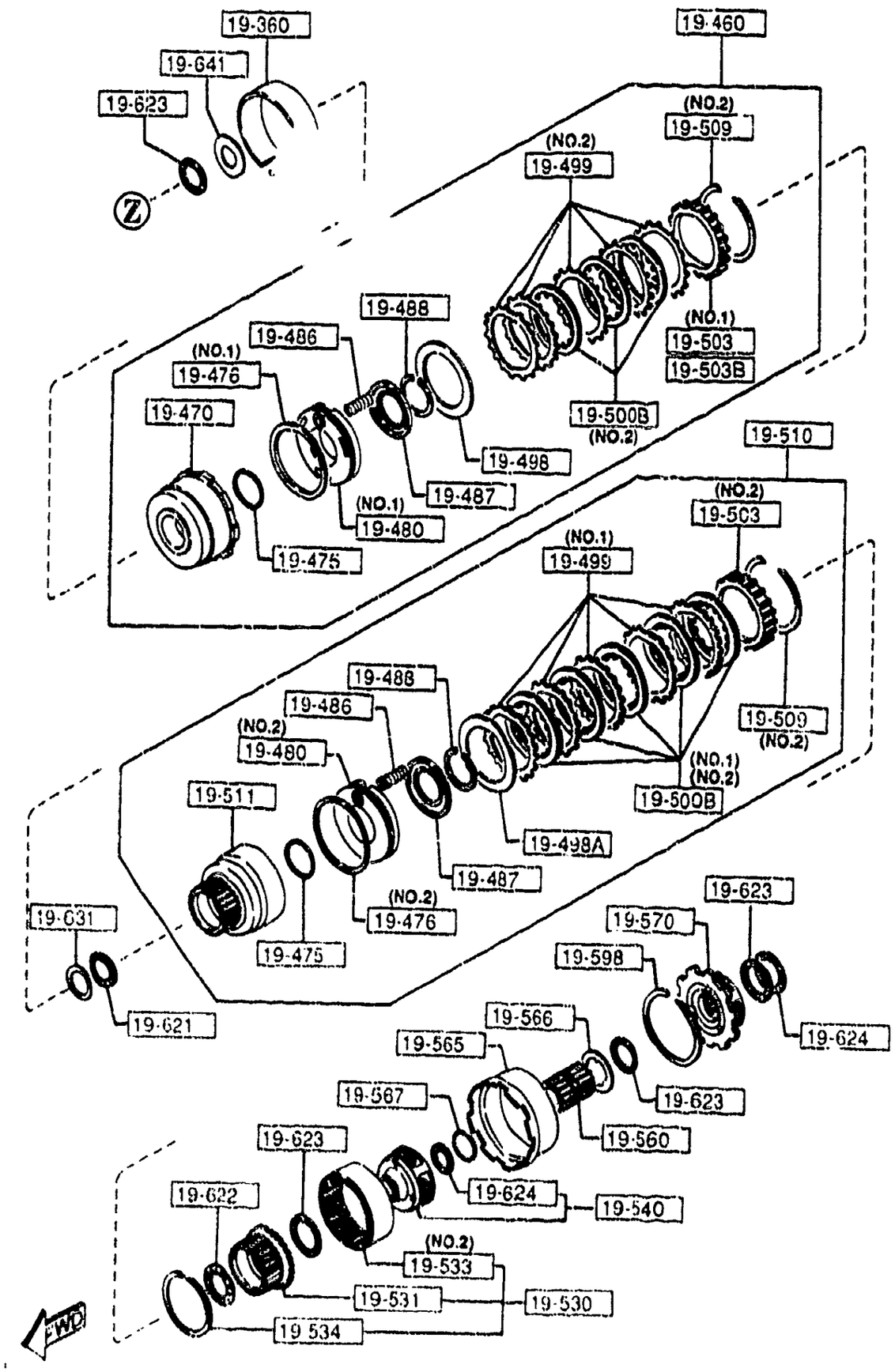

AUNA04

PART NO.	QTY	MODEL/RESTRICTION	MODEL/RESTRICTION	MODEL/RESTRICTION	FROM-TO
21-540		CARRIER,OVER DRIVE			
BV01-21-540B	1				
21-560		GEAR,OVER DRIVE			
BV01-21-560	1				
21-565		CONNECTING,SHELL			
BU03-21-565	1				
21-567		RING,SNAP			
BU03-21-567	1				
21-570		SUPPORT,CENTER			
BV01-21-570A	1				
21-590		CLUTCH,ONE WAY			
BV01-21-533	1				
21-631		RACE,BRG.HUB CLUTCH			
BU01-21-631	1	L=1.2MM			
BU01-21-632	1	L=1.4MM			
BU01-21-633	1	L=1.6MM			
BU01-21-634	1	L=1.8MM			
BU01-21-635	1	L=2MM			
BU01-21-636	1	L=2.2MM			
21-679		SHAFT,INTERMEDIATE			
BU01-21-679	1				
21-821		PLATE,RETAINING			
BV01-21-821A	1				

1940 GOVERNOR, LOW & REVERSE PISTON (AUTOMATIC)

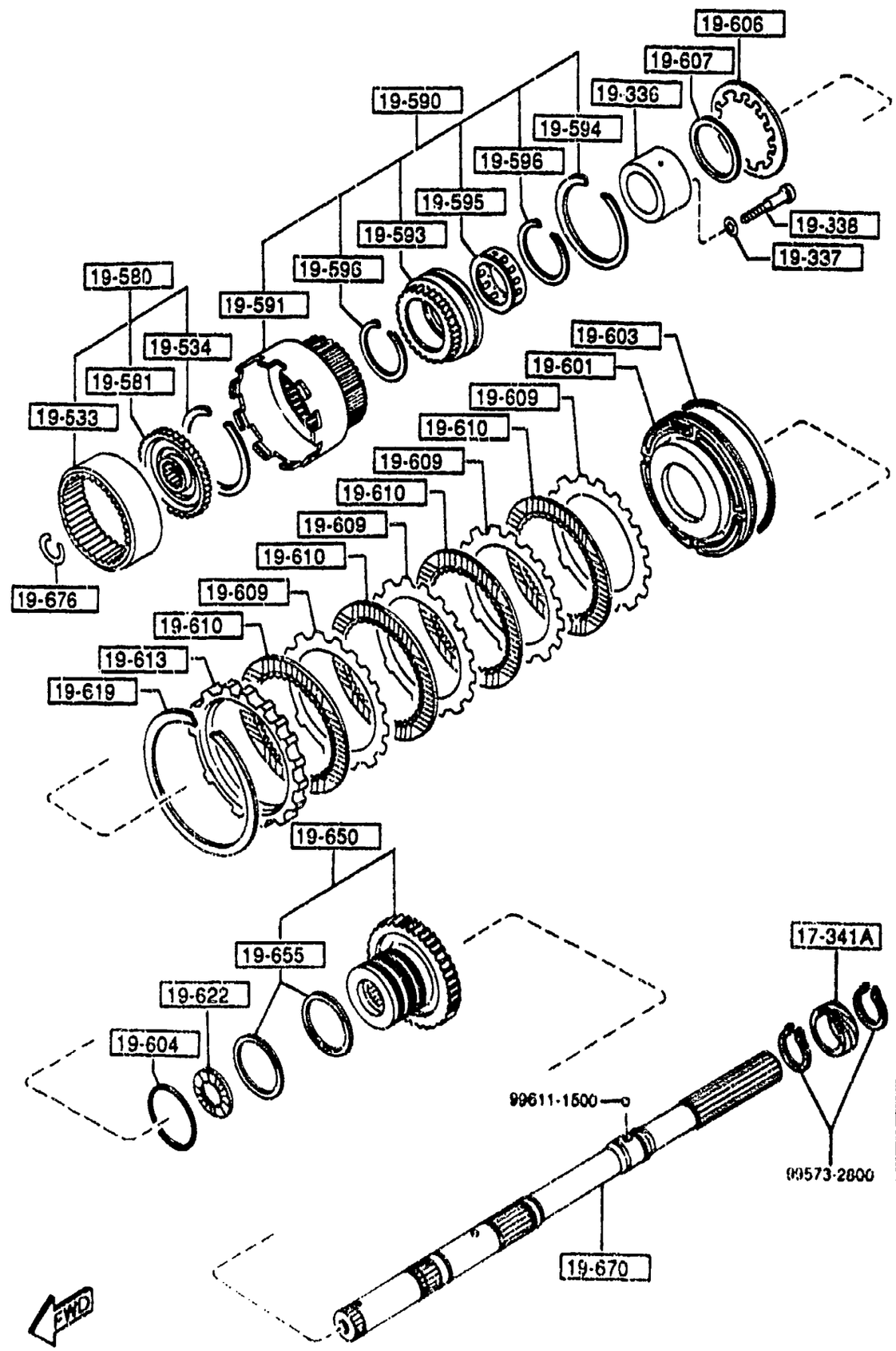

PART NO.	QTY	MODEL/RESTRICTION	MODEL/RESTRICTION	MODEL/RESTRICTION	FROM-TO
17-341A 1281-17-341	1	GEAR,SPEEDO.DRIVE			
19-336 0338-19-336	1	RACE,INNER			
19-337 0338-19-337	8	WASHER,PLAIN			
19-338 0338-19-338	8	BOLT			
19-533 0338-19-533A	1	GEAR,INTERNAL			
19-534 0338-19-534	1	RING,SNAP			
19-580 0338-19-580	1	FLANGE			
19-581 *0338-19-581	1	FLANGE,DRIVE			
19-590 0338-19-590	1	DRUM,CONNECTING			
19-591 0338-19-591	1	DRUM,CONNECTING			
19-593 0338-19-593	1	RACE,OUTER			
19-594 0338-19-594	1	RING,SNAP			
19-595 0338-19-595	1	CLUTCH,ONE WAY			
19-596 0338-19-596	2	RING,SNAP			

1940 GOVERNOR, LOW & REVERSE PISTON (AUTOMATIC)

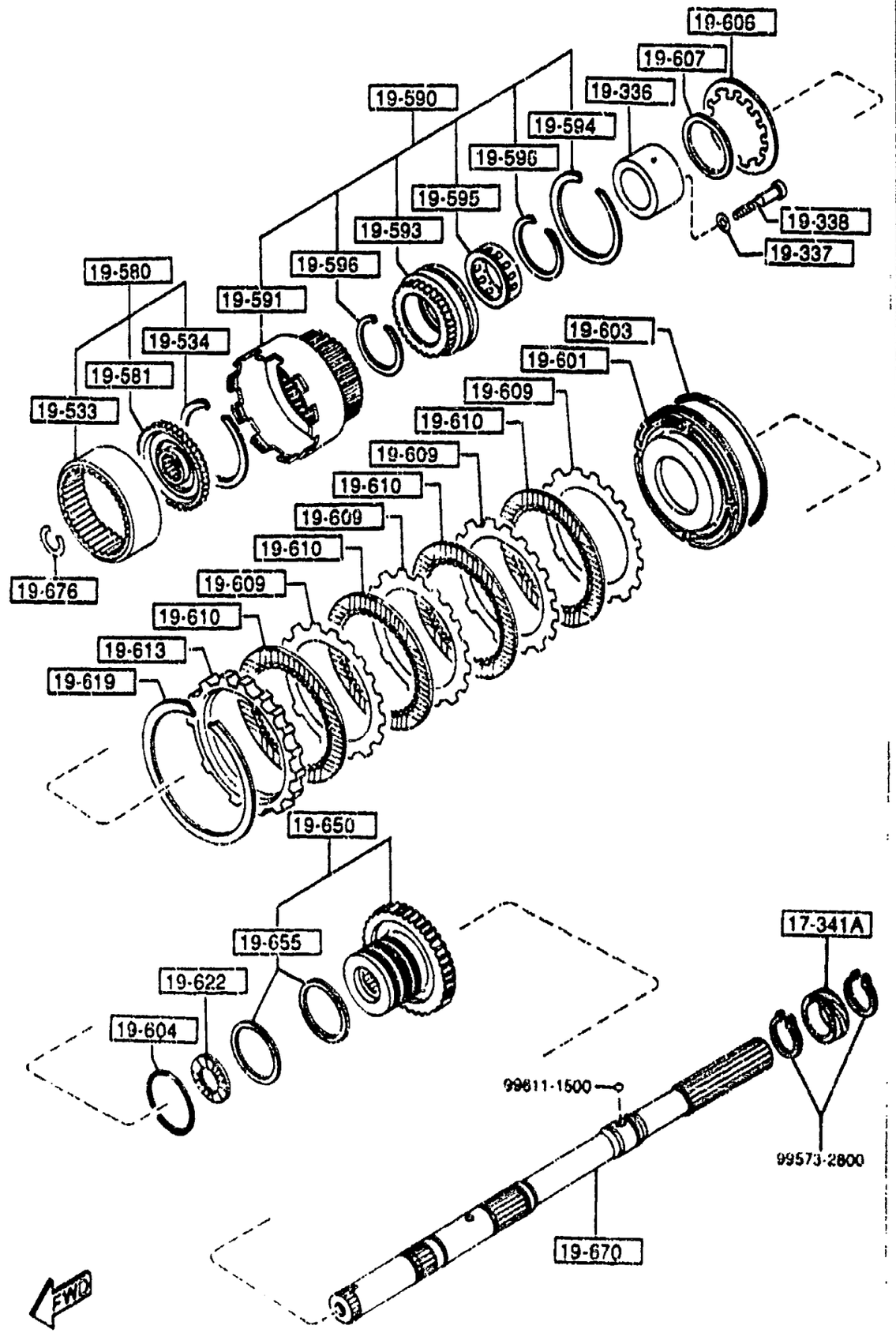

PART NO.	QTY	MODEL/RESTRICTION	MODEL/RESTRICTION	MODEL/RESTRICTION	FROM-TO
19-601		PISTON,LOW & REVERSE			
BT08-19-600	1				
19-603		SEAL,PISTON			
0338-19-603	1				
19-604		SEAL,'O'RING			
0338-19-604	1				
19-606		SPRING,PISTON			
0338-19-606	1				
19-607		RING,SNAP			
0338-19-607	1				
19-609		PLATE,DRIVEN			
0338-19-609	4				
19-610		PLATE,DRIVEN			
BU17-19-610	4				
19-613		PLATE,RETAINING			
0338-19-613A	1	T=11.8MM			
0338-19-614A	1	T=12MM			
0338-19-615A	1	T=12.2MM			
0338-19-616A	1	T=12.4MM			
0338-19-617A	1	T=12.6MM			
0338-19-618A	1	T=12.8MM			
19-619		RING,SNAP			
0338-19-619	1				
19-622		BEARING,NEEDLE			
BU91-19-622	1	D=34.7MM			
FT01-19-622	1	D=33.8MM			

1940 GOVERNOR, LOW & REVERSE PISTON (AUTOMATIC)

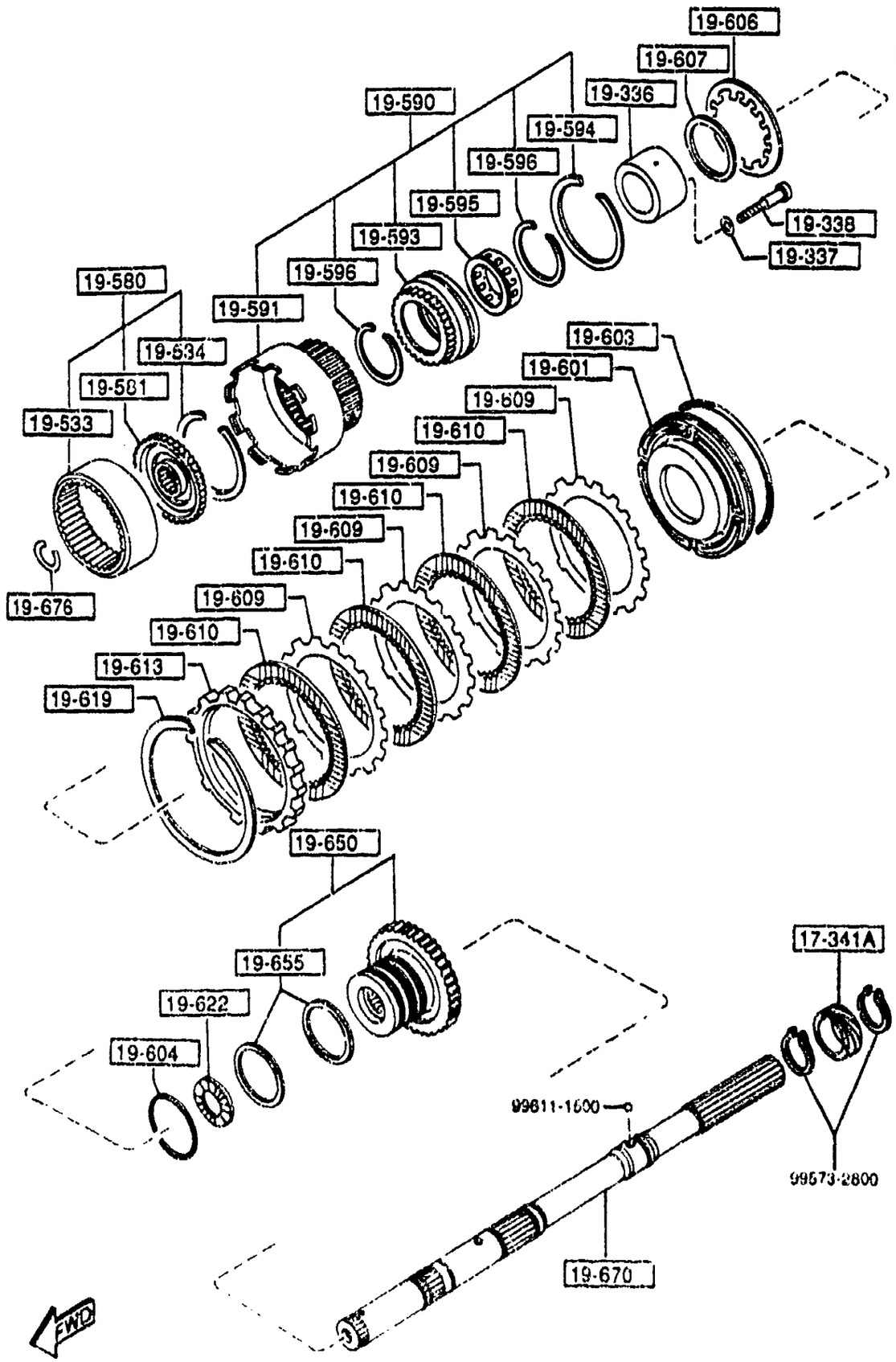

PART NO.	QTY	MODEL/RESTRICTION	MODEL/RESTRICTION	MODEL/RESTRICTION	FROM-TO
19-650		DISTRIBUTOR,OIL			
BV01-19-650	1				
19-655		RING,SEAL			
BV01-19-655	2				
19-670		SHAFT			
BU55-19-670	1				
19-676		RING			
033B-19-676	1				

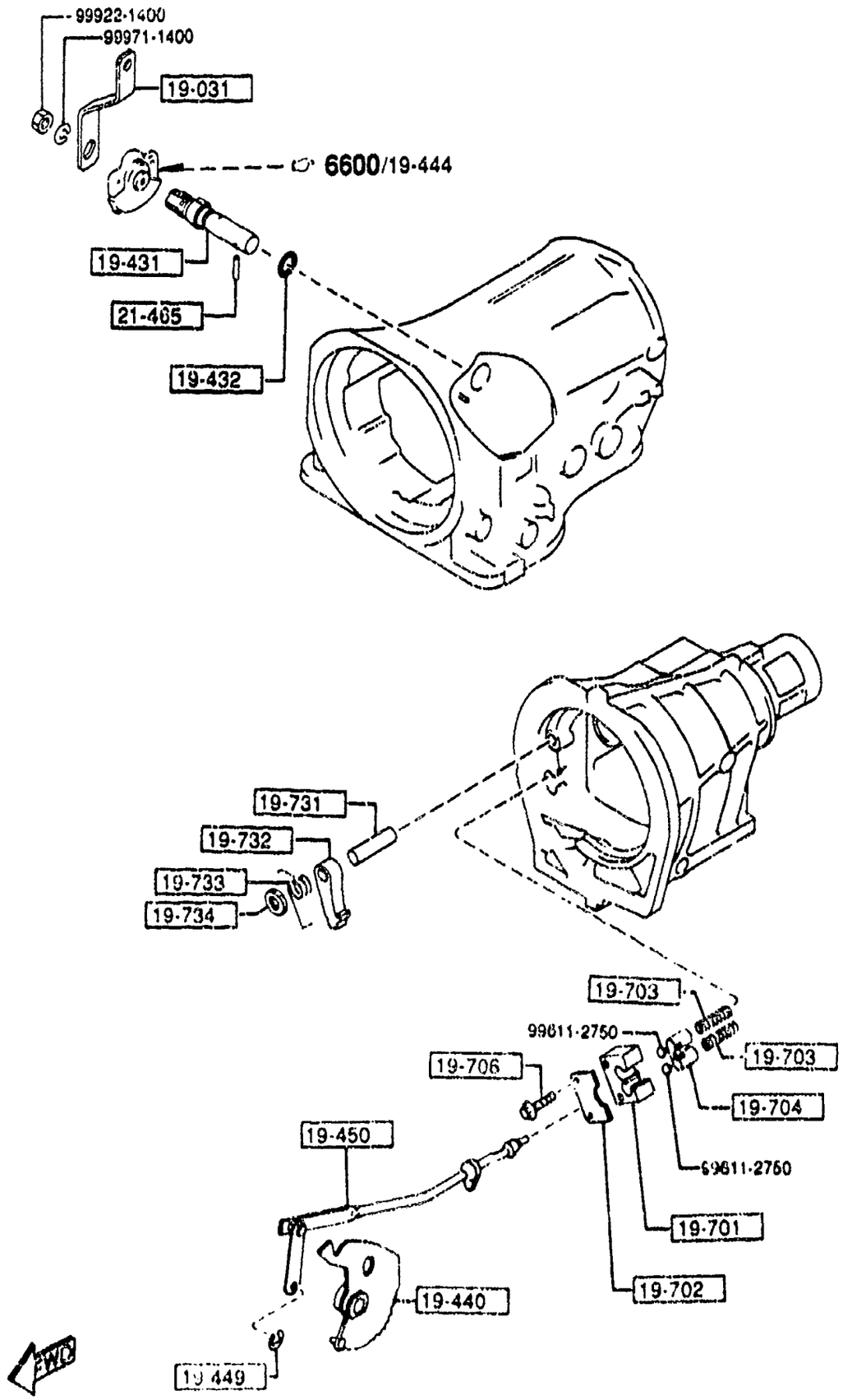

PART NO.	QTY	MODEL/RESTRICTION	MODEL/RESTRICTION	MODEL/RESTRICTION	FROM-TO
19-031		LEVER,SELECT			
BU55-19-031	1				
19-431		SHAFT,MANUAL			
BU67-19-431	1				
19-432		RING,'O'			
0338-19-432	1				
19-440		PLATE,MANUAL			
BU56-19-440	1				
19-449		RING,SNAP			
0338-19-449	1				
19-450		ROD,PARKING			
BU17-19-450	1				
19-701		SUPPORTER,ACTUATOR			
BU17-19-701	1				
19-702		PLATE,RETAINING			
0338-19-702A	1				
19-703		SPRING,BALL PARK			
BU17-19-703	2				
19-704		RETAINER			
BU17-19-704	1				
19-706		BOLT			
0338-19-706	1				
19-731		SHAFT,PARKING PAWL			
0338-19-731	1				
19-732		PAWL,PARKING			
BU17-19-732	1				
19-733		SPRING,PAWL RETURN			
0338-19-733C	1				

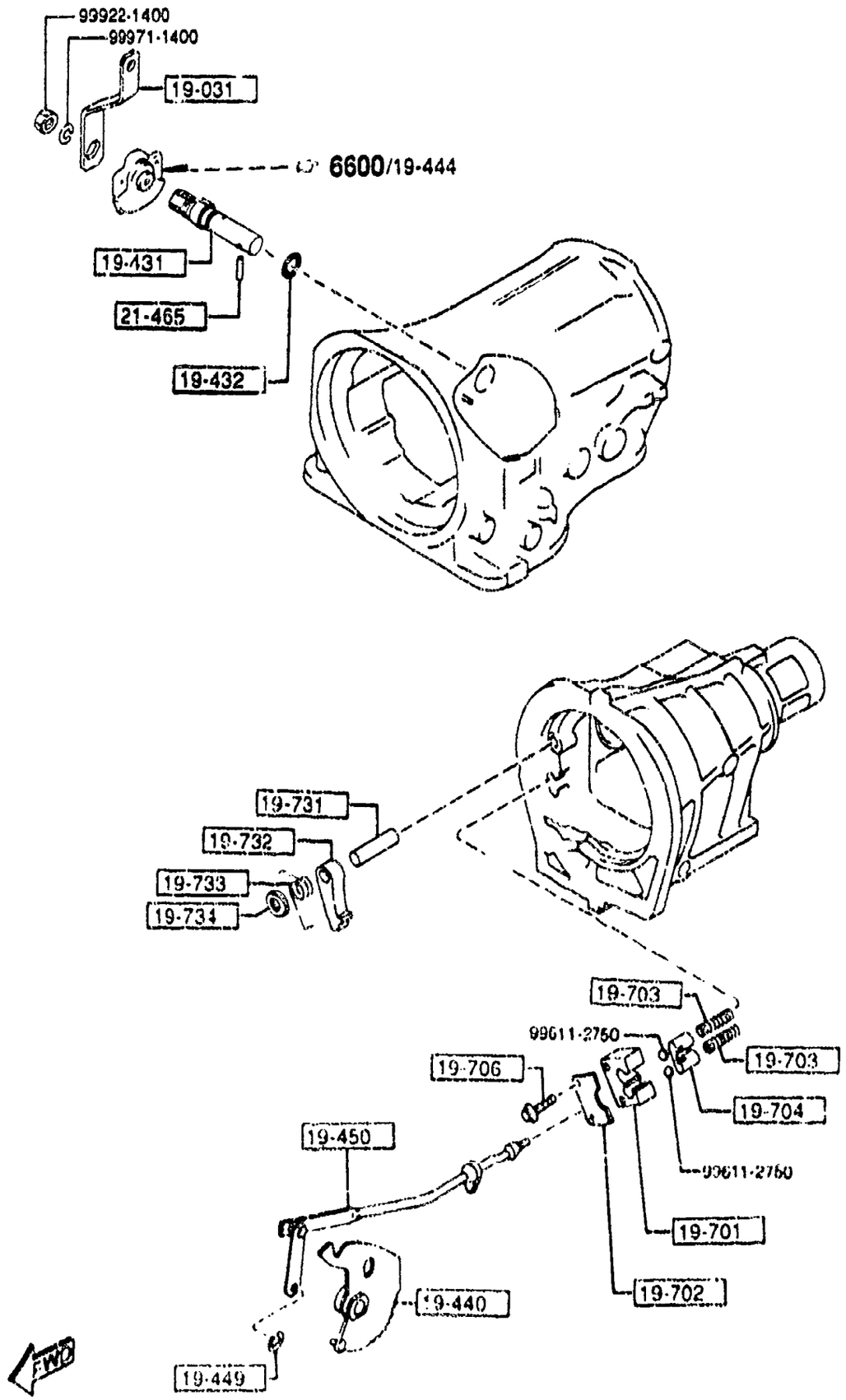

PART NO	QTY	MODEL/RESTRICTION	MODEL/RESTRICTION	MODEL/RESTRICTION	FROM-TO
19-734		SPACER,DOWEL			
0338-19-734A	1				
21-465		PIN,SPRING-PARKING ROD			
BU67-21-465	1				

1960 GASKET & SEAL KIT (AUTOMATIC)

22-900

1-SEAL, OIL ..... (1)
2-GASKET, OIL PUMP ..... (1)
3-SEAL, OIL ..... (1)
4-RING, SEAL ..... (4)
5-RING, SEAL ..... (2)
6-SEAL, CUT RING ..... (1)
7-GASKET ..... (1)
8-SEAL, PISTON ..... (1)
9-SEAL, PISTON ..... (1)
10-SEAL, PISTON ..... (1)
11-SEAL, PISTON ..... (1)
12-SEAL, LATHE CUT ..... (1)
13-RING, "O" ..... (1)
14-RING, "O" ..... (1)
15-RING, "O" ..... (1)
16-SEAL, "O" RING ..... (3)
17-SEAL, LATHE CUT ..... (1)
18-SEAL, PISTON ..... (1)
19-SEAL, "O" RING ..... (1)
20-RING, SEAL ..... (2)
21-GASKET, EXTENTION ..... (1)
22-SEAL, "O" RING ..... (1)
23-GASKET, OIL PAN ..... (1)
24-GASKET, DRUM SUPPORT .. (1)
25-RING, "O" ..... (1)
26-RING, "O" ..... (1)
27-RING, "O" ..... (1)
28-GASKET, O/DRIVE CASE .. (1)
29-RING, "O" ..... (2)
30-RING, "O" ..... (1)
31-RING, "O" ..... (4)

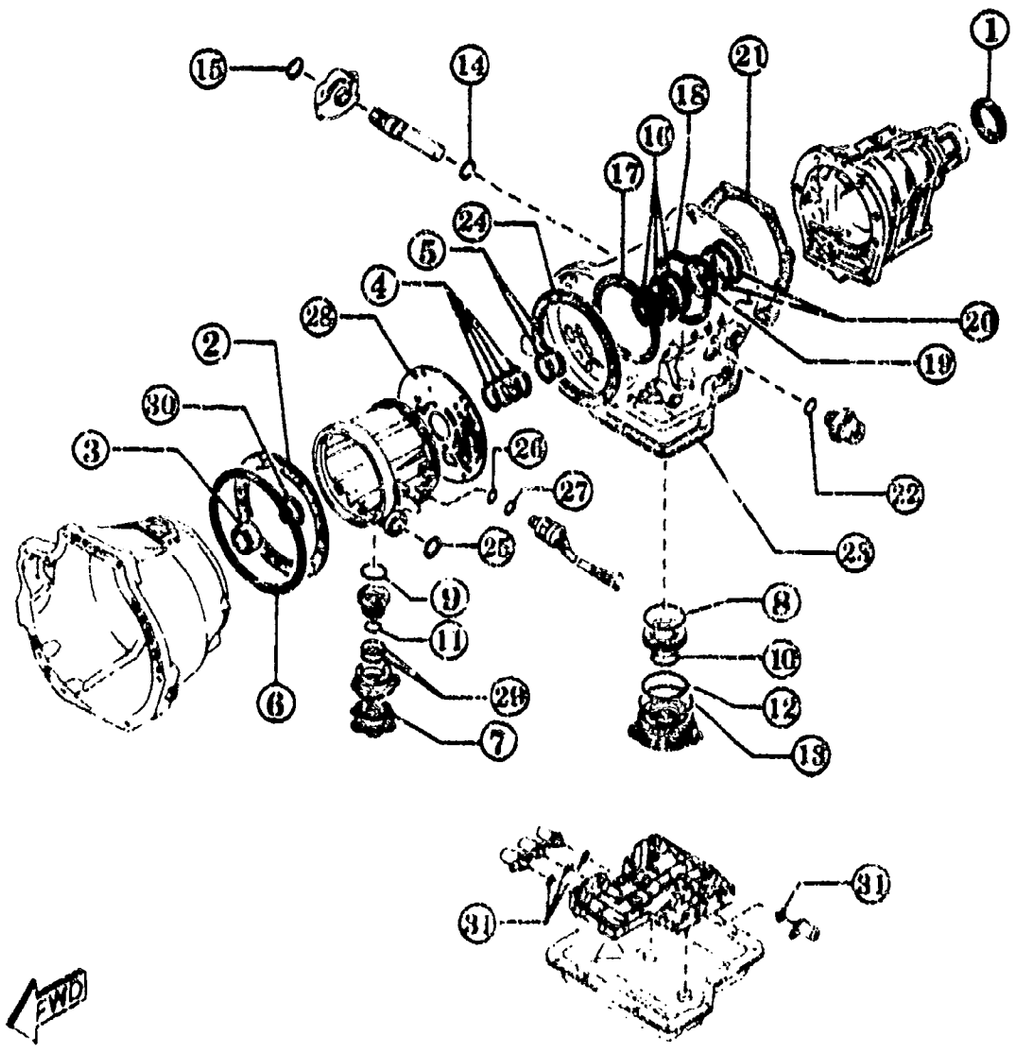

PART NO.	QTY	MODEL/RESTRICTION	MODEL/RESTRICTION	MODEL/RESTRICTION	FROM-TO
22-900		GASKET & SEAL KIT			
N451-22-900	1				

ENGINE

CHASSIS

ENGINE

CHASSIS

ENGINE

CHASSIS

ENGINE

CHASSIS

ENGINE

CHASSIS

ENGINE

CHASSIS

ENGINE

CHASSIS

ENGINE

CHASSIS

ENGINE

CHASSIS

ENGINE

CHASSIS

ENGINE

CHASSIS

ENGINE

CHASSIS

2505 -1 * REAR PROPELLER SHAFT

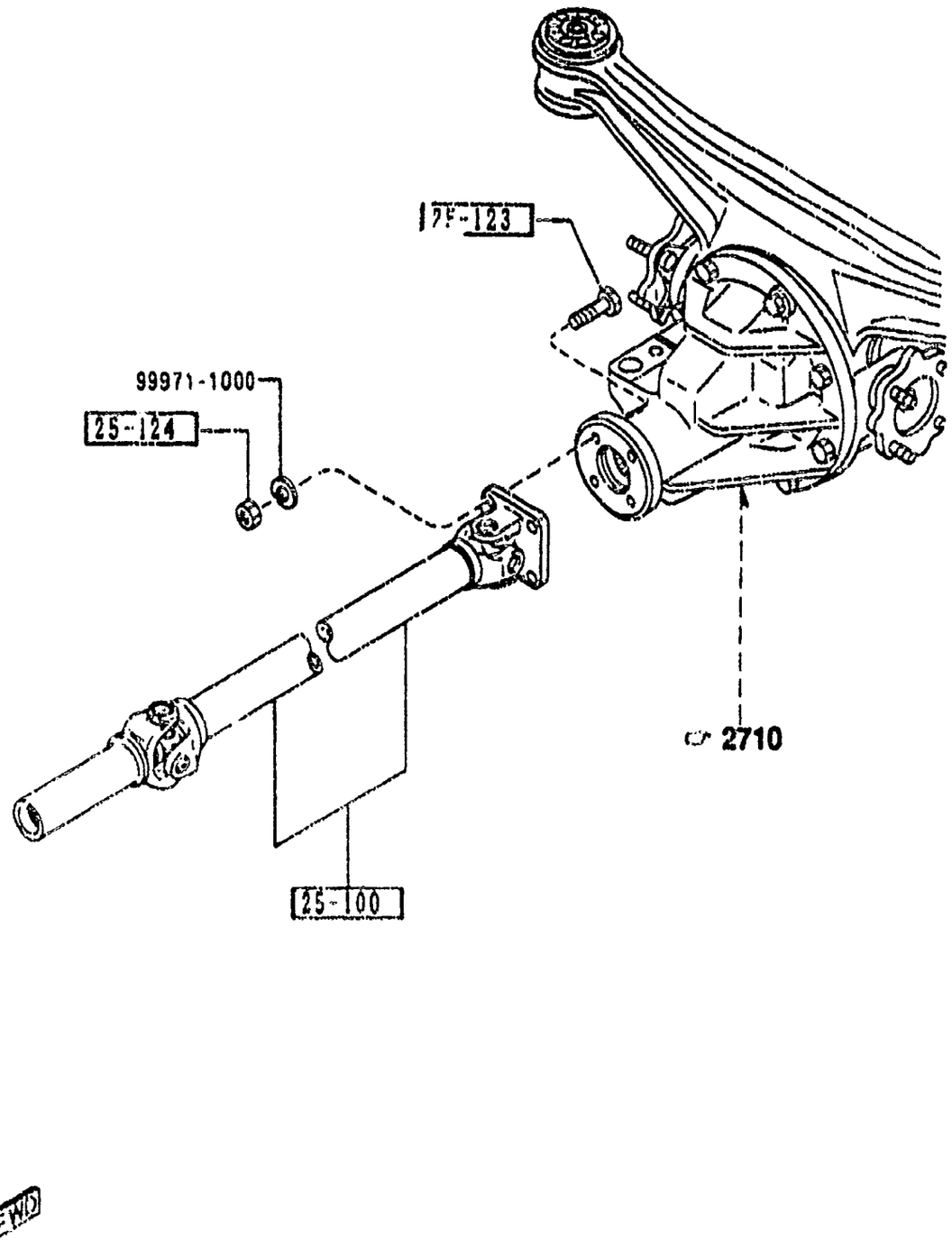

PART NO.	QTY	MODEL/RESTRICTION	MODEL/RESTRICTION	MODEL/RESTRICTION	FROM-TO
25-100		SHAFT,PROPELLER-FRT			
MF04-25-100	1				
25-123		BOLT			
P011-25-123	4				
25-124		NUT			
1368-25-124	4				

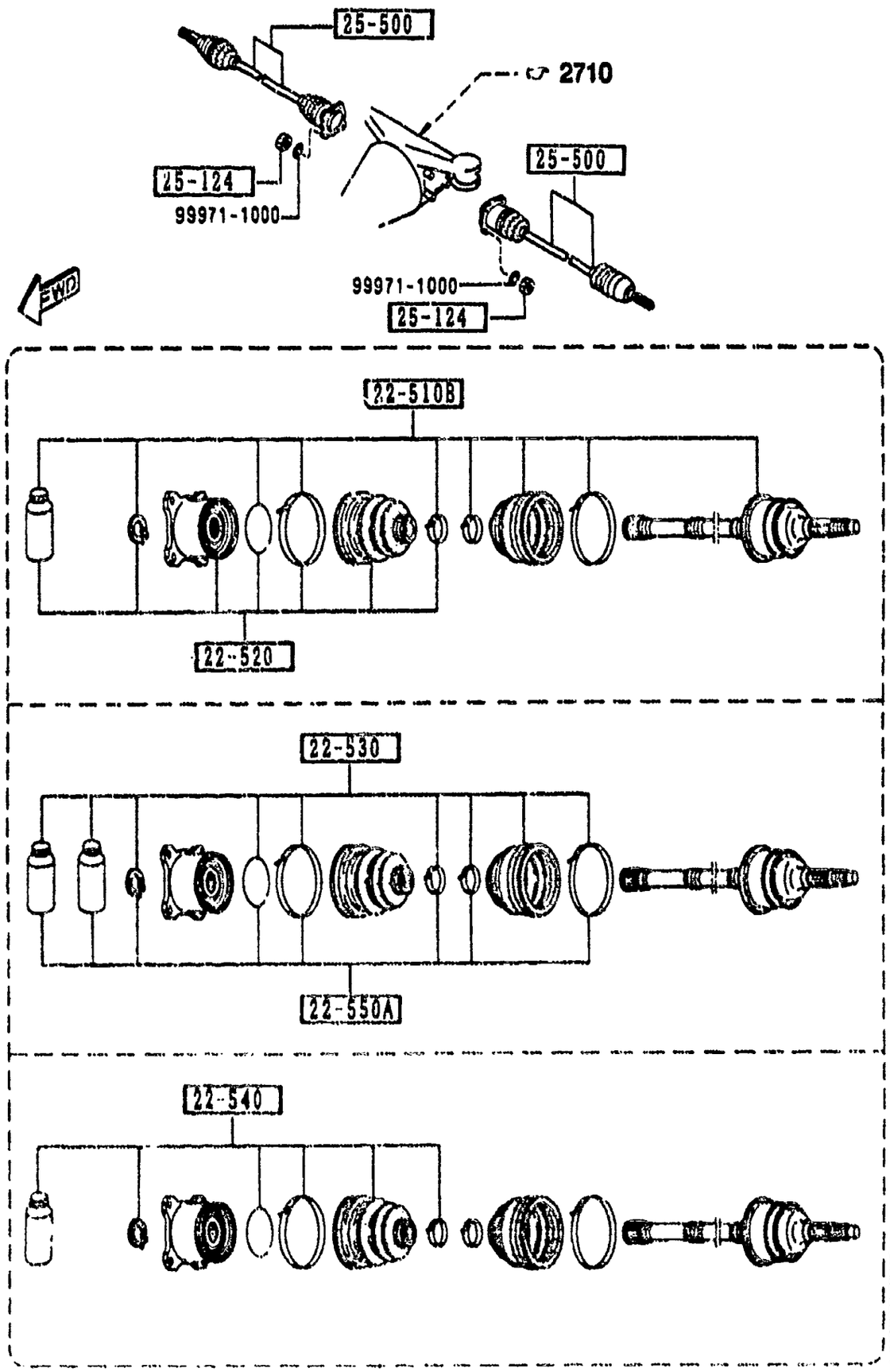

AUNA004

2550 -1 M REAR DRIVE SHAFT

PART NO.	QTY	MODEL/RESTRICTION	MODEL/RESTRICTION	MODEL/RESTRICTION	FROM TO
22-510B		JOINT SET,OUTER			
MD02-22-510	2	(W/O A.LOCK BRAKE)			
MD03-22-510	2	(A.LOCK BRAKE)			
22-520		JOINT SET,INNER			
MD02-22-520	2				
22-530		BOOT SET,OUTER JOINT			
M090-22-530	2				
22-540		BOOT SET,INNER JOINT			
M090-22-540	2				
22-550A		CLIP SET,DRIVE SHAFT			
M090-22-550	2				
25-124		NUT			
1368-25-124	8				
25-500		SHAFT,DRIVE			
MD02-25-500	2	(W/O A LOCK BRAKE)			
MD03-25-500	2	(A.LOCK BRAKE)			

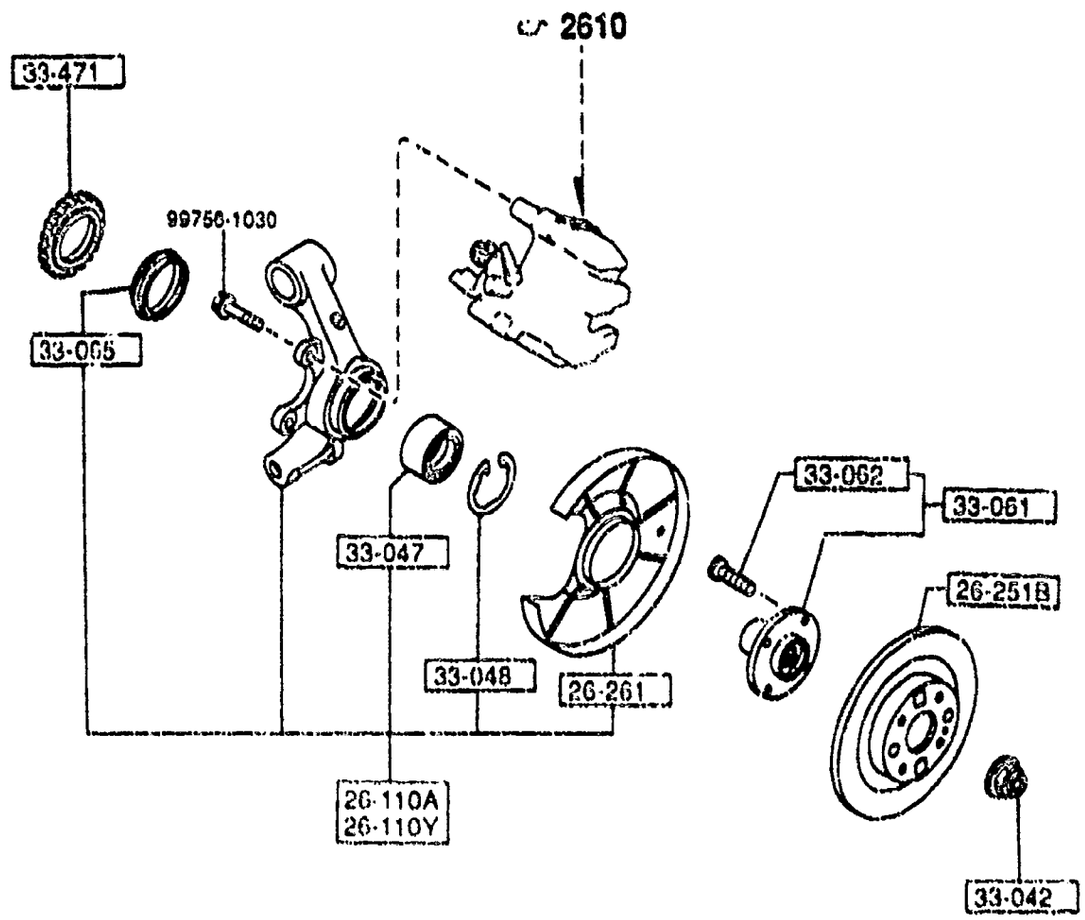

END

PART NO.	QTY	MODEL/RESTRICTION	MODEL/RESTRICTION	MODEL/RESTRICTION	FROM-TO
26-110A		KNUCKLE(R),REAR			
NA75-26-130	1	(W/O A.LOCK BRAKE)			
NA80-26-130	1	(A.LOCK BRAKE)			
26-110Y		KNUCKLE(L),REAR			
NA75-26-140	1	(W/O A.LOCK BRAKE)			
NA80-26-140	1	(A.LOCK BRAKE)			
26-251B		PLATE,DISC			
BR74-26-251A AN(BR74-26-251B)	2				-3C22
BR74-26-251B	2				3C22-
26-261		COVER,DUST			
B530-26-261B	2				
33-042		NUT			
NA01-33-042B AN(D06Y-33-042)	2	W/WASHER			-4126
D06Y-33-042	2	W/WASHER			4126-
33-047		BEARING,WHEEL			
B455-33-047B	2				
33-048		RING,RETAINING-DISC PLATE			
H260-33-048	2				
33-061		HUB,WHEEL			
B01A-33-060	2				
33-062		BOLT,HUB			
B01Y-33-062	8				
33-065		SEAL,OIL-AXLE			
G304-33-065	2				
33-471		ROTOR,SENSOR-FRT A.B.S.			
B603-33-471	2	(A.LOCK BRAKE)			

3C22 NA3***-500108
4126 NA3***-511068

2610 -1 REAR BRAKE MECHANISMS

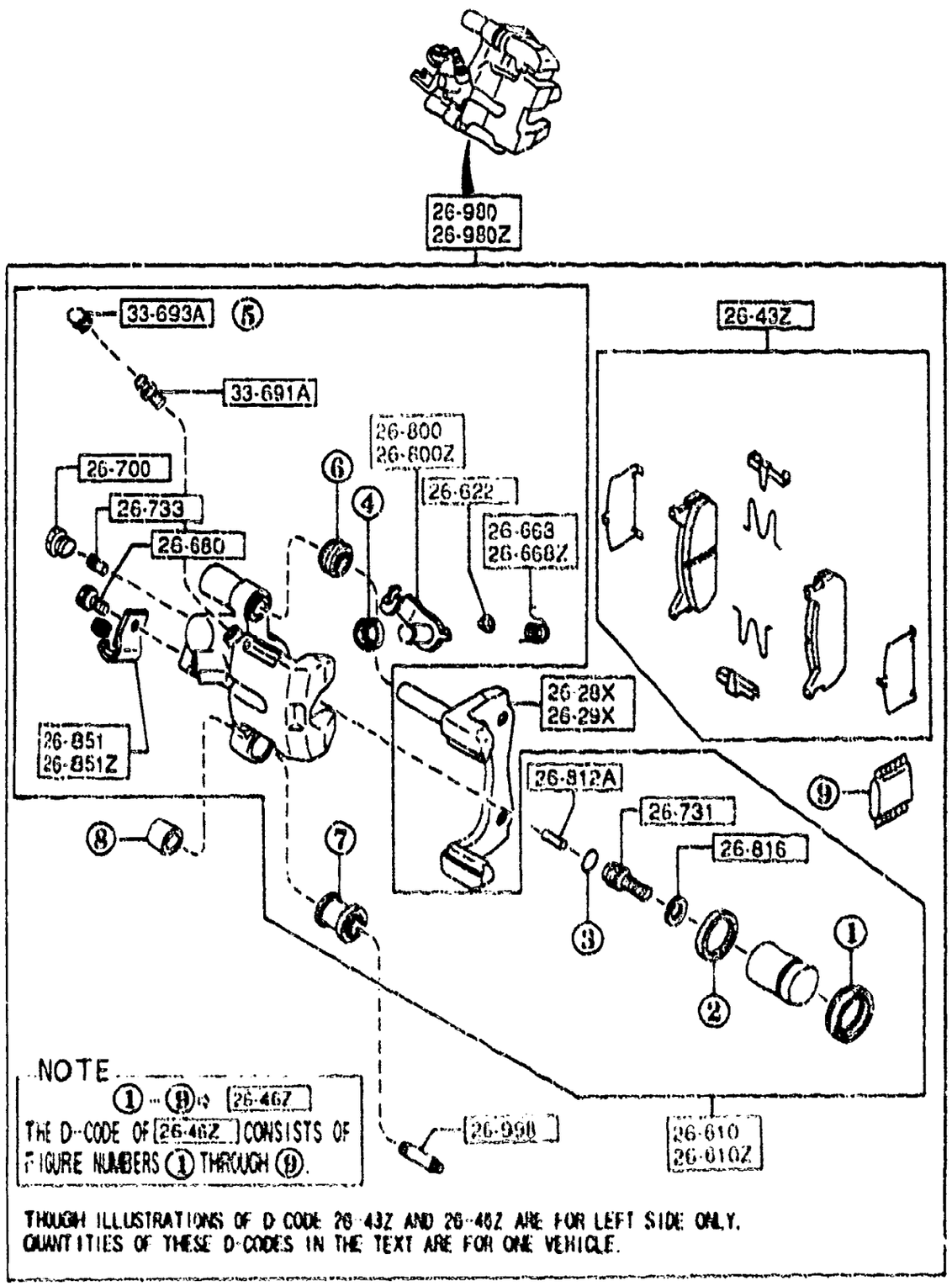

PART NO.	QTY	MODEL/RESTRICTION	MODEL/RESTRICTION	MODEL/RESTRICTION	FROM-TO
26-28X NA75-26-28X	1	SUPPORT(P),MOUNTING			
26-29X NA75-26-29X	1	SUPPORT(L),MOUNTING			
26-43Z NAY5-26-43Z	1	PAD SET,RR CALIPER			
26-46Z NAY1-26-46Z	1	SEAL & BOOT SET,CAL.-RR			
26-610 NA75-26-61X	1	BODY & PISTON(R),CALIPER			
26-610Z NA75-26-71X	1	BODY & PISTON(L),CALIPER			
26-622 BWOH-26-696	4	PIN,STOPPER-RR CALIPER			
26-668 BWOH-26-668	1	SPRING(R),LEVER			
26-668Z BWOH-26-669	1	SPRING(L),LEVER			
26-680 BWOH-26-680	2	BOLT			
26-700 BWOH-26-700	2	PLUG,SCREW			
26-731 GA2E-26-731	2	SPINDLE,ADJUSTER			
26-733 BWOH-26-733	2	GEAR,ADJUST			
26-800 BR76-26-800	1	LEVER(R),OPERATING			

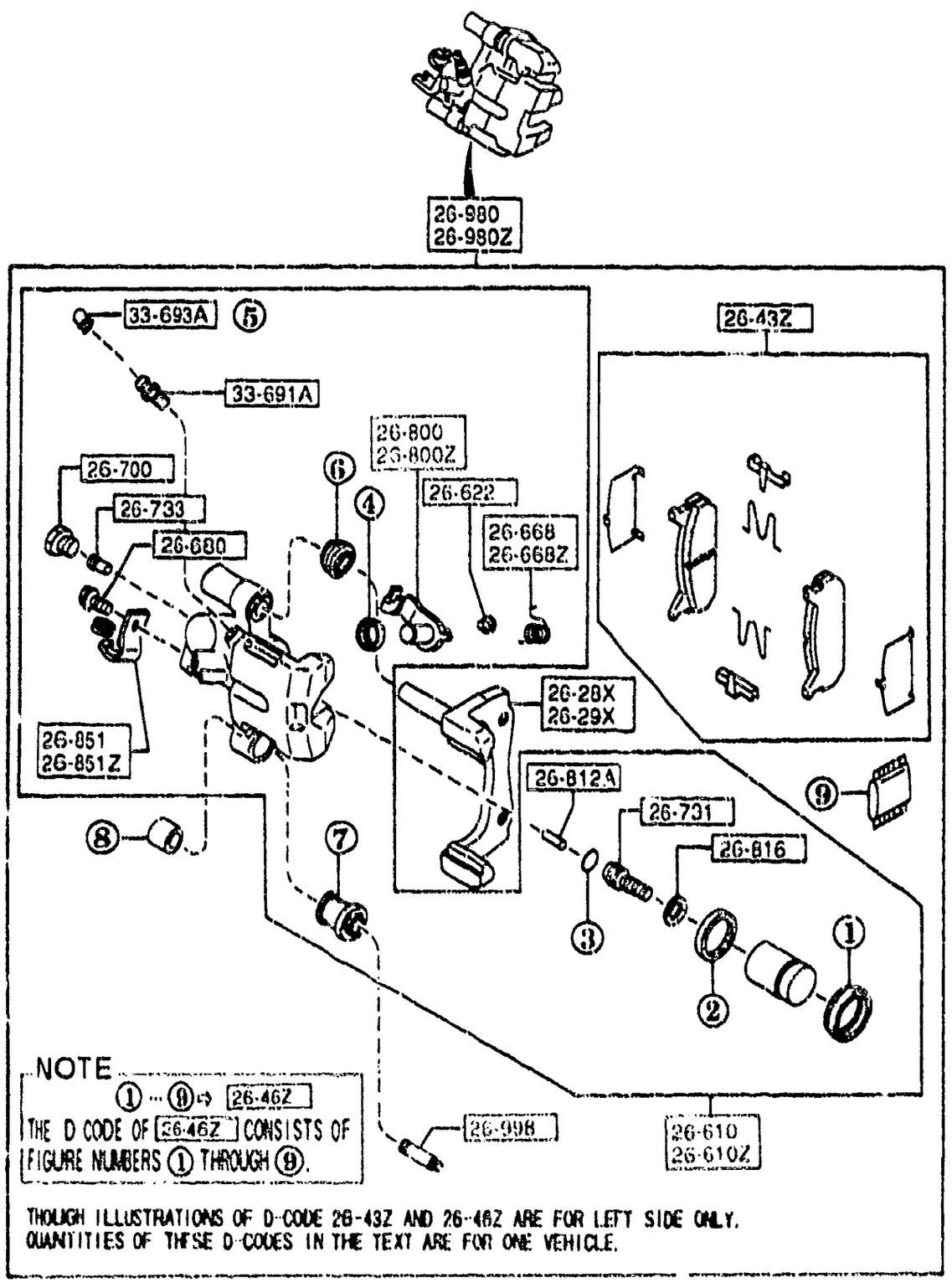

NOTE
①…⑨⇨ 26-46Z
THE D CODE OF 26-46Z CONSISTS OF FIGURE NUMBERS ① THROUGH ⑨.

THOUGH ILLUSTRATIONS OF D-CODE 26-43Z AND 26-46Z ARE FOR LEFT SIDE ONLY, QUANTITIES OF THESE D-CODES IN THE TEXT ARE FOR ONE VEHICLE.

PART NO.	QTY	MODEL/RESTRICTION	MODEL/RESTRICTION	MODEL/RESTRICTION	FROM-TO
26-800Z		LEVER(L),OPERATING			
BR76-26-810	1				
26-812A		ROD,PUSH-FRT CALIPER			
BW0H-26-812	2				
26-816		RING,SNAP-RR CALIPER			
GA2E-26-816	2				
26-851		BRACKET(R),CABLE			
BW0H-26-851	1				
26-851Z		BRACKET(L),CABLE			
BW0H-26-861	1				
26-980		CALIPER(R),RR BRAKE			
NA75-26-980	1				
26-980Z		CALIPER(L),RR BRAKE			
NA75-26-990	1				
26-998		PIN,GUIDE			
BW0H-26-998A	2				
33-691A		SCREW,BLEEDER			
BW0H-26-691	2				
33-693A		CAP,BLEEDER SCREW			
0259-33-693	2				

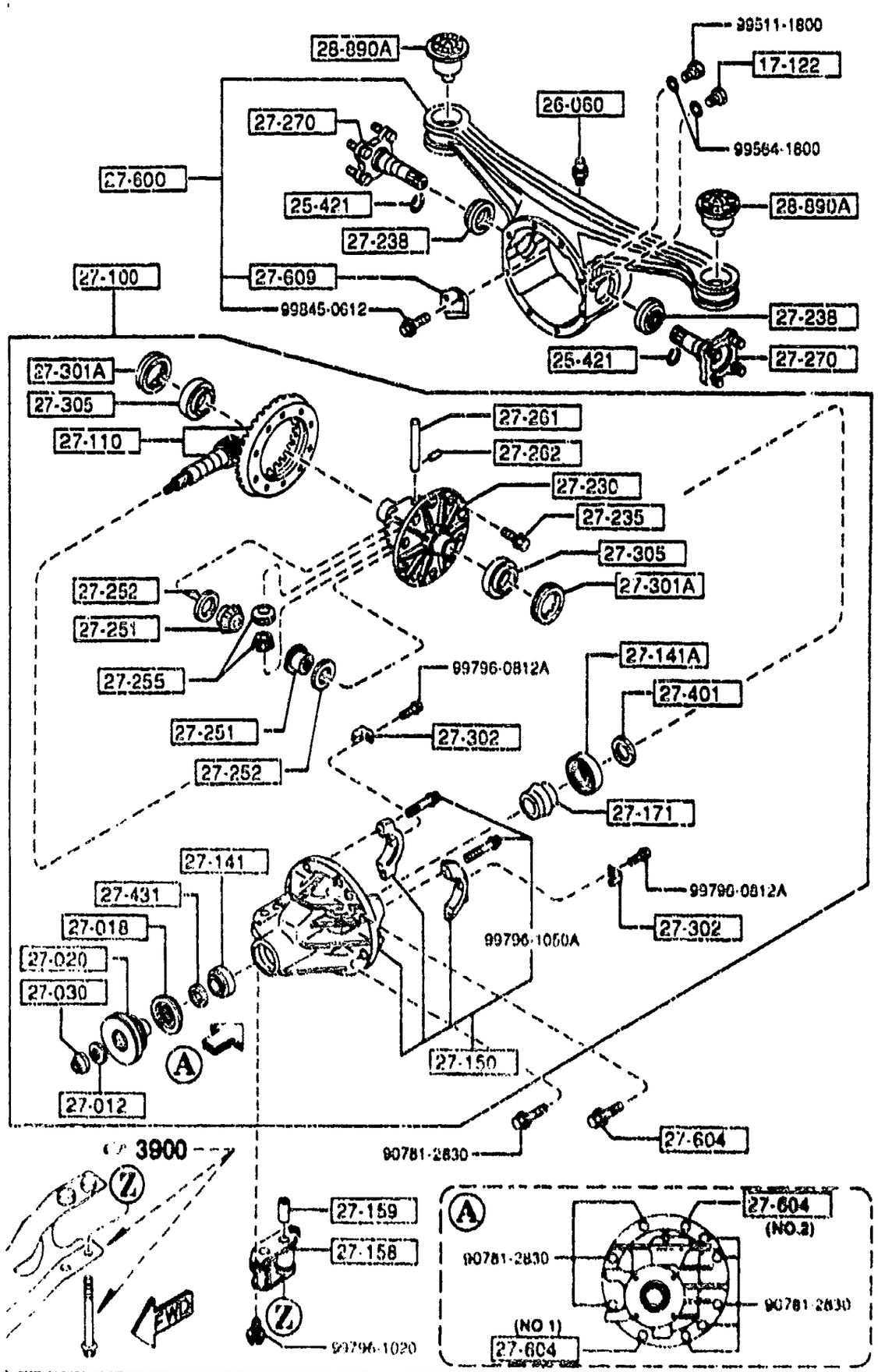

PART NO.	QTY	MODEL/RESTRICTION	MODEL/RESTRICTION	MODEL/RESTRICTION	FROM-TO
17-122		PLUG,MAGNET			
0810-17-121	1				
25-421		CLIP			
G003-25-421	2				
26-060		BREATHER			
0730-26-060	1				
27-012		WASHER			
0223-27-012	1				
27-018		SEAL,OIL			
M054-27-165	1				-3901
MA02-27-165	1				3901-
27-020		FLANGE,COMPANION			
MA02-27-120	1	(AT)			
MA03-27-120	1	(MT)			
27-030		NUT,LOCK			
0223-27-030	1				
27-100		DRIVING & DIFF.			
MA02-27-100	1	(AT)			
MA03-27-100 A (MA03-27-100A)	1				-3901
MA03-27-100A	1	(MT)			3901-
27-110		GEAR SET,FINAL			
M068-27-110A	1	R=4.100			
27-141		BEARING,PINION			
0755-27-210	1				
27-141A		BEARING,PINION			
M025-27-210	1				
27-150		CARRIER,DIFFERENTIAL			
MA02-27-150	1				

3901 NA3###-502360

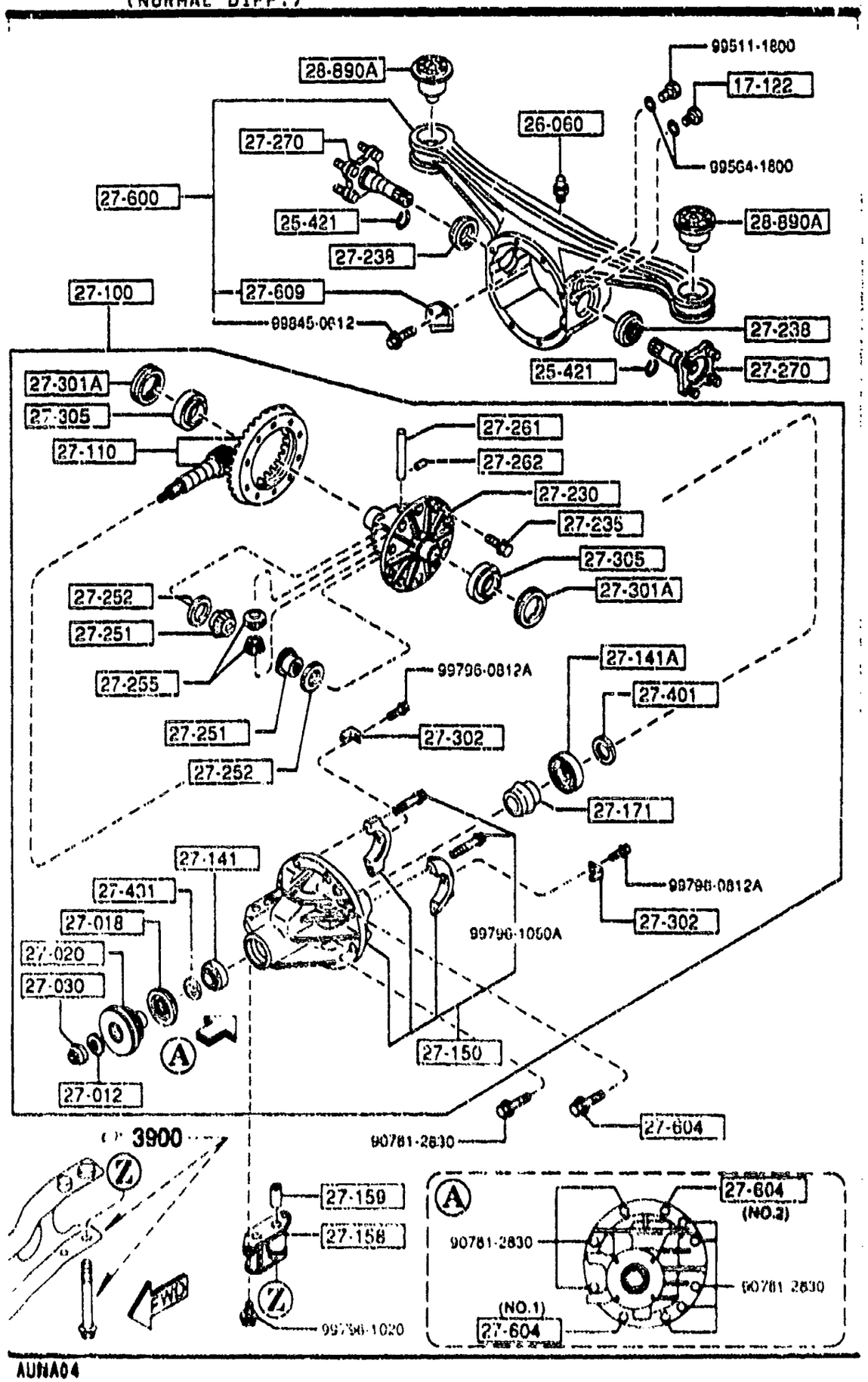

PART NO.	QTY	MODEL/RESTRICTION	MODEL/RESTRICTION	MODEL/RESTRICTION	FROM-TO
27-158		SPACE			
T020-27-158A	1				
27-159		PIN,TUBULAR			
T020-27-159A	1				
27-171		PIECE,DISTANCE			
M035-27-171	1				
27-230		CASE			
M069-27-231	1				
27-235		BOLT,RING GEAR			
8051-27-235	10	D=10MM			
8051-27-236	10	D=10.2MM			
27-238		SEAL,OIL			
M0A1-27-238	2				-3901
MA02-27-238	2				3901-
27-251		GEAR,DIFF.SIDE			
M069-27-251	2				
27-252		WASHER			
0290-27-252	2	T=2MM			
0290-27-253	2	T=2.1MM			
0290-27-254	2	T=2.2MM			
0290-27-256	2	T=2.05MM			
0290-27-259	2	T=2.15MM			
27-255		PINION,DIFFERENTIAL			
M025-27-255B	2				
27-261		SHAFT,DIFF. PINION			
M025-27-261A	1				

3901 NA3###-502360

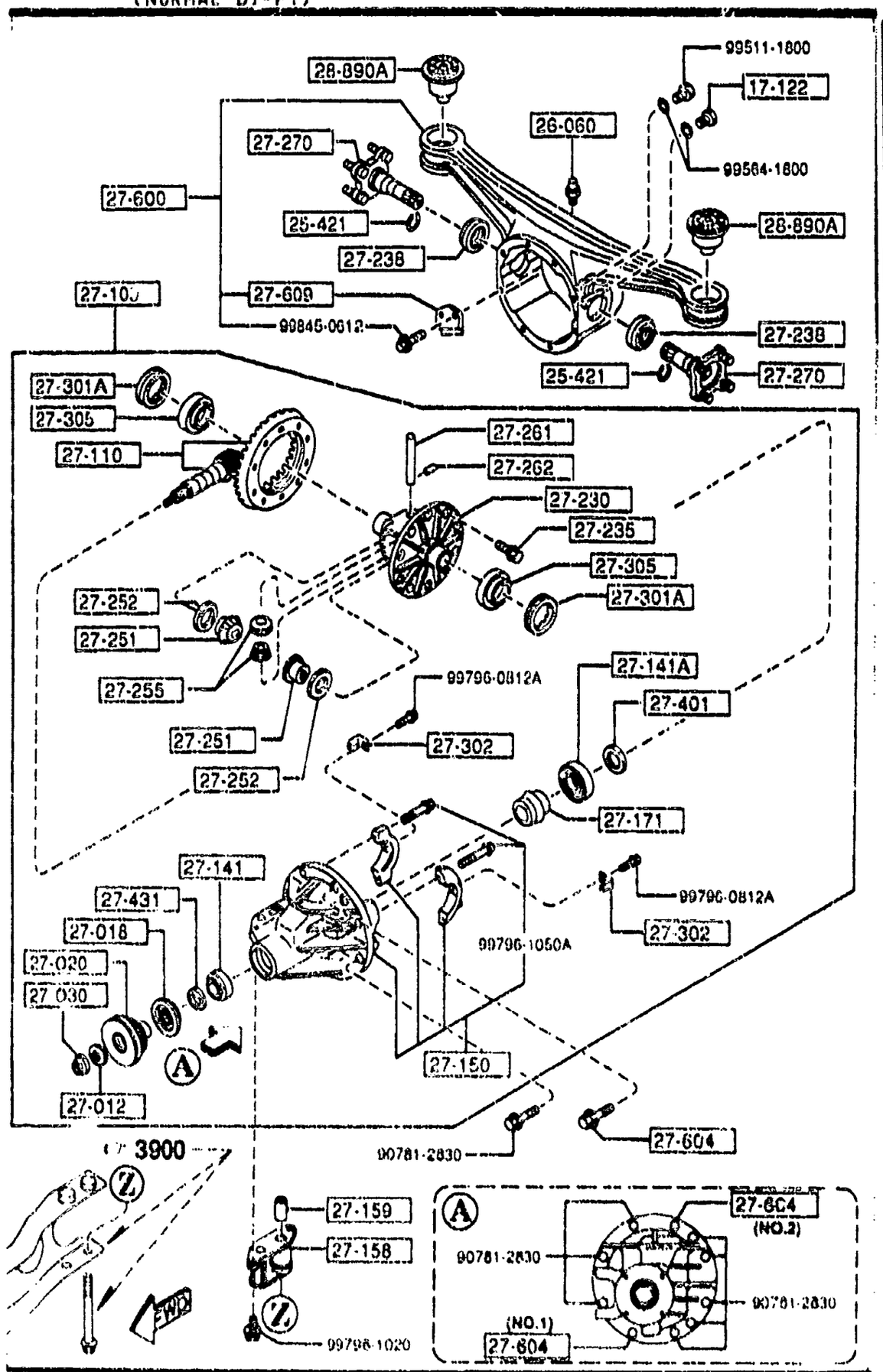

AUNA04

PART NO.	QTY	MODEL/RESTRICTION	MODEL/RESTRICTION	MODEL/RESTRICTION	FROM-TO
27-262		PIN			
0114-27-262	1				
27-270		YOKE,DIFFERENTIAL			
M055-27-270C	2				
27-301A		SCREW,ADJUST			
0290-27-301	2				
27-302		PLATE,LOCK			
0290-27-302	2				
27-305		BEARING			
0221-27-350	2				
27-401		SPACER			
0223-27-401A	1	T=3.08MM			
0223-27-402A	1	T=3.11MM			
0223-27-403A	1	T=3.14MM			
0223-27-404A	1	T=3.17MM			
0223-27-405A	1	T=3.2MM			
0223-27-406A	1	T=3.23MM			
0223-27-407A	1	T=3.26MM			
0223-27-408A	1	T=3.29MM			
0223-27-409A	1	T=3.32MM			
0223-27-411A	1	T=3.35MM			
0223-27-412A	1	T=3.38MM			
0223-27-413A	1	T=3.41MM			
0223-27-414A	1	T=3.44MM			
0223-27-415A	1	T=3.47MM			

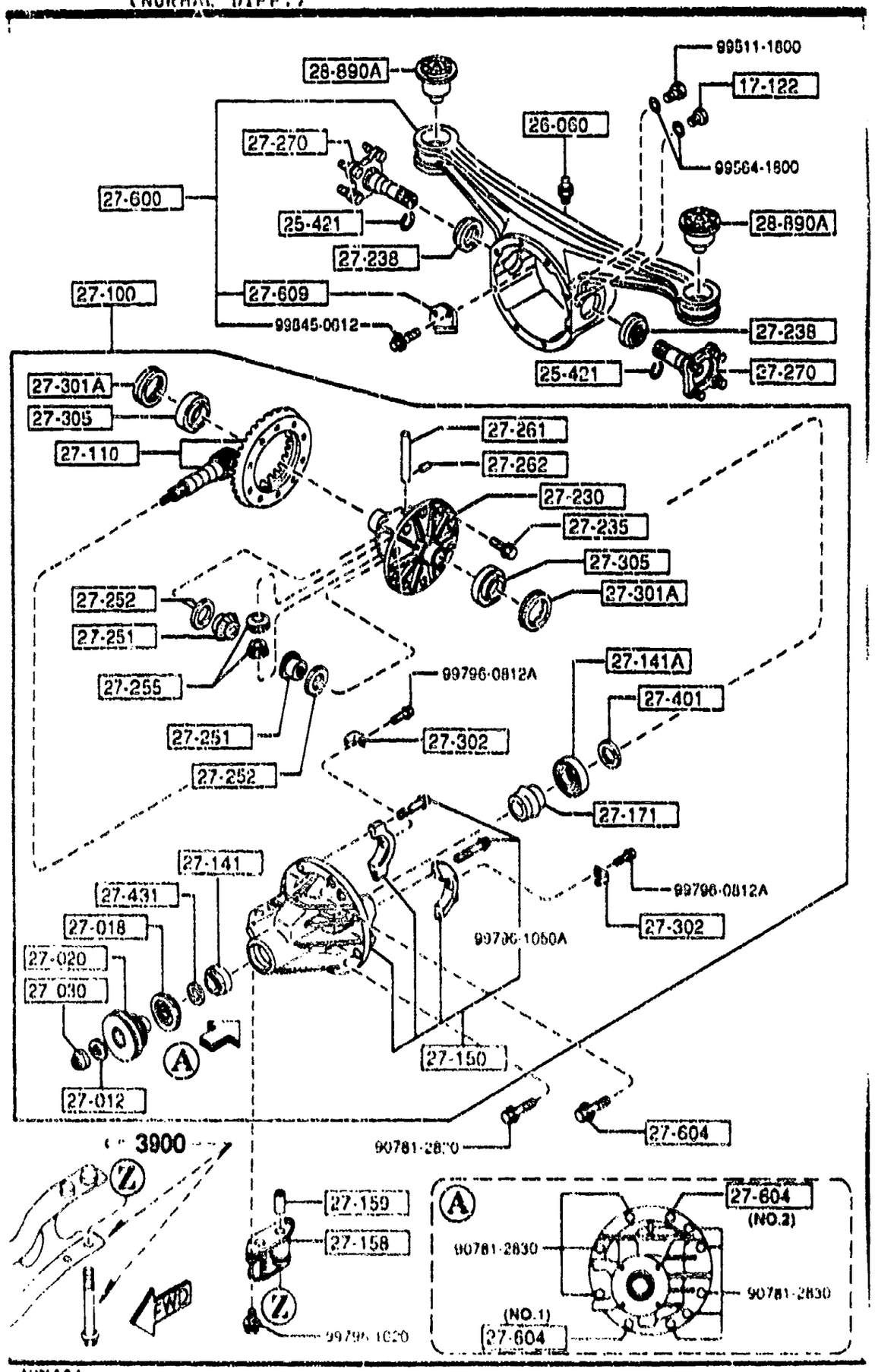

PART NO.	QTY	MODEL/RESTRICTION	MODEL/RESTRICTION	MODEL/RESTRICTION	FROM-TO
27-431		SPACER			
PA01-27-431	1				
27-600		CASING,DIFFERENTIAL			
MA02-27-600	1				
27-604		BOLT,CARRIER			
M053-27-604	1	(ILLUST. NO.1)			
M053-27-605	1	(ILLUST. NO.2)			
27-609		PLATE,BAFFLE-DIFF CASING			
M0A1-27-609A	1				
28-890A		RUBBER,SUB FRAME MTG			
NA01-28-890	2				

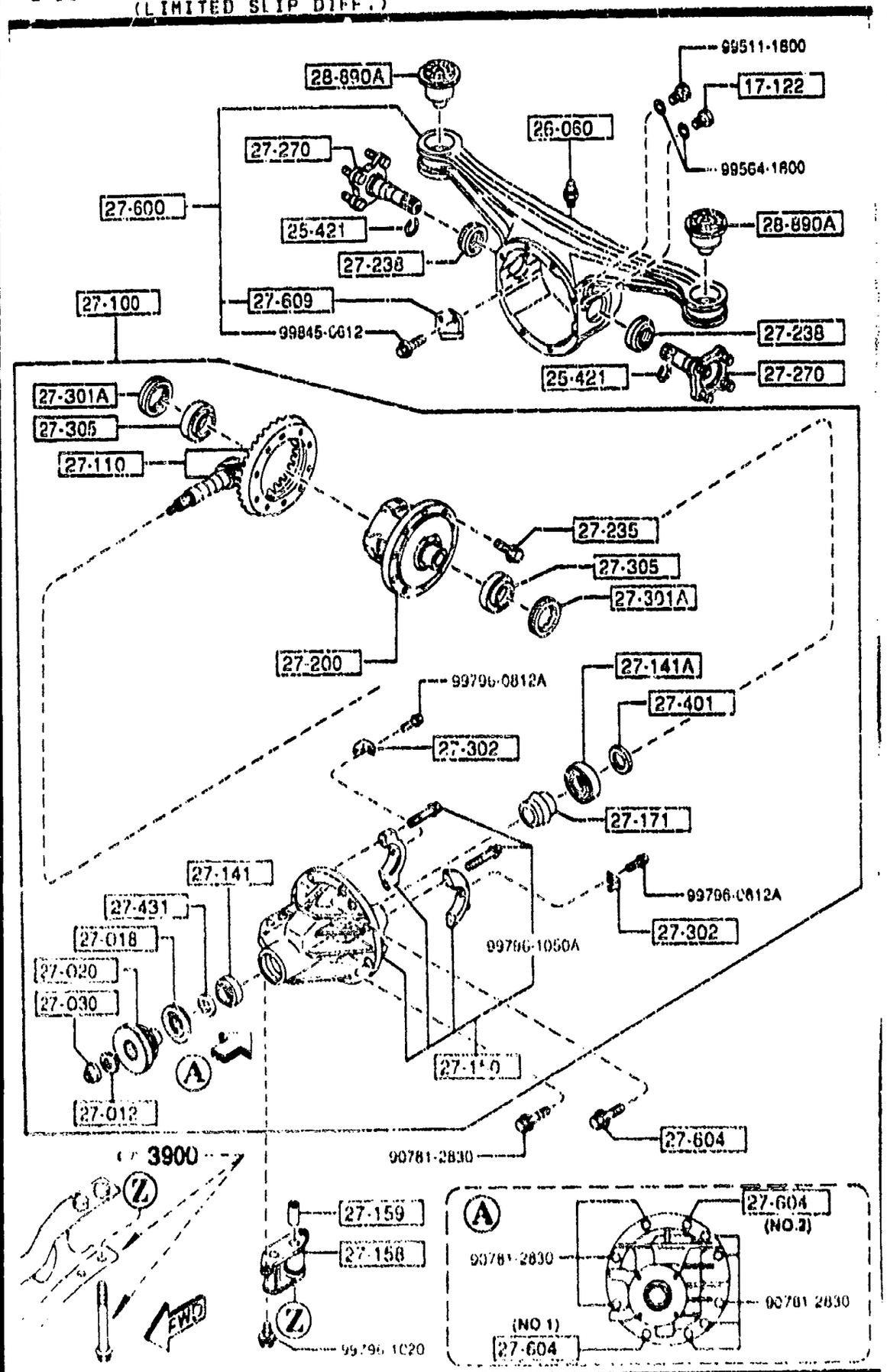

PART NO.	QTY	MODEL/RESTRICTION	MODEL/RESTRICTION	MODEL/RESTRICTION	FROM-TO
17-122		PLUG,MAGNET			
0810-17-121	1				
25-421		CLIP			
G003-25-421	2				
26-060		BREATHER			
0730-26-060	1				
27-012		WASHER			
0223-27-012	1				
27-018		SEAL,OIL			
M054-27-165	1				-3901
MA02-27-165	1				3901-
27-020		FLANGE,COMPANION			
MA03-27-120	1				
27-030		NUT,LOCK			
0223-27-030	1				
27-100		DRIVING & DIFF.			
MM01-27-100	1				-3901
A (MM01-27-100A)					
MH01-27-100A	1				3901-
27-110		GEAR SET,FINAL			
M068-27-110A	1	R=4.100			
27-141		BEARING,PINION			
0755-27-210	1				
27-141A		BEARING,PINION			
M025-27-210	1				
27-150		CARRIER,DIFFERENTIAL			
MA02-27-150	1				
27-158		SPACE			

3901 MA3###-502360

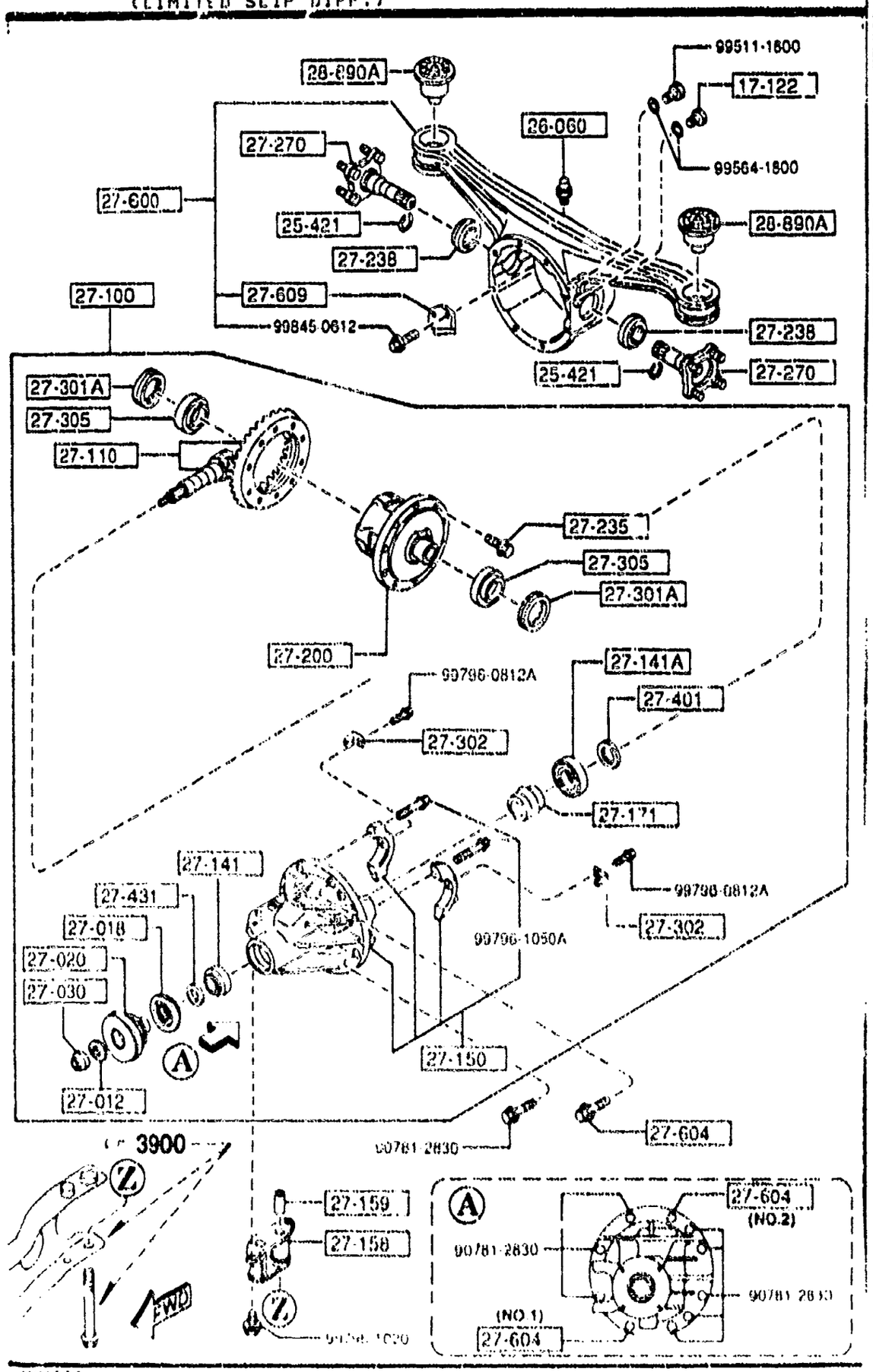

PART NO.	QTY	MODEL/RESTRICTION	MODEL/RESTRICTION	MODEL/RESTRICTION	FROM-TO
CONT'D					
T020-27-158A	1				
27-159		PIN,TUBULAR			
T020-27-159A	1				
27-171		PIECE,DISTANCE			
M035-27-171	1				
27-200		DIFFERENTIAL			
MM01-27-200	1				
27-235		BOLT,RING GEAR			
8051-27-235	10	D=10MM			
8051-27-236	10	D=10.2MM			
27-238		SEAL,OIL			
MA01-27-238	2				-3901
MA02-27-238	2				3901-
27-270		YOKE,DIFFERENTIAL			
M055-27-270C	2				
27-301A		SCREW,ADJUST			
0290-27-301	2				
27-302		PLATE,LOCK			
0290-27-302	2				
27-305		BEARING			
0221-27-350	2				
27-401		SPACER			
0223-27-401A	1	T=3.08MM			
0223-27-402A	1	T=3.11MM			
0223-27-403A	1	T=3.14MM			
0223-27-404A	1	T=3.17MM			

3901 NA5***-502360

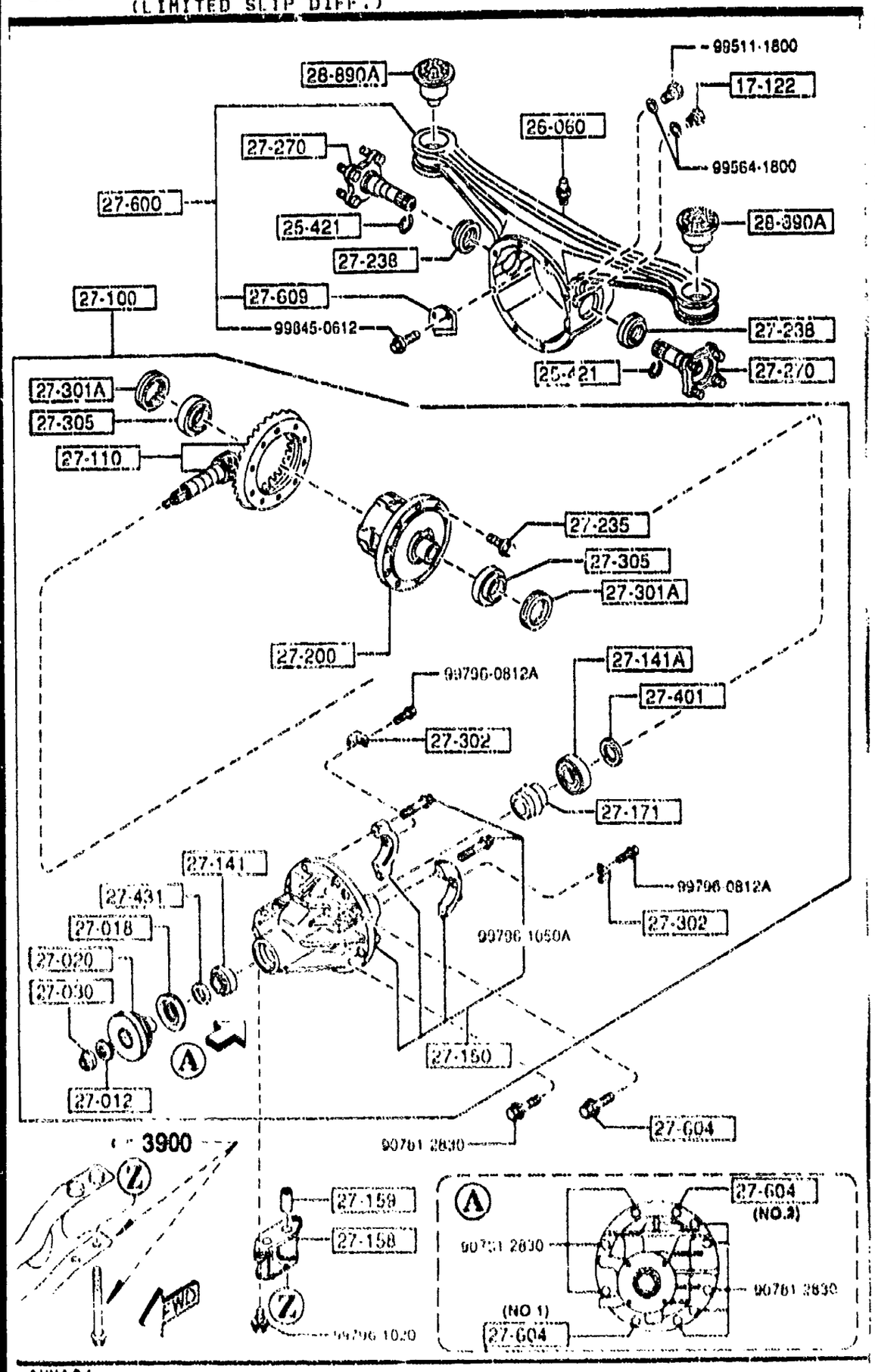

PART NO.	QTY	MODEL/RESTRICTION	MODEL/RESTRICTION	MODEL/RESTRICTION	FROM-TO
CONT'D					
0223-27-405A	1	T=3.2MM			
0223-27-406A	1	T=3.23MM			
0223-27-407A	1	T=3.26MM			
0223-27-408A	1	T=3.29MM			
0223-27-409A	1	T=3.32MM			
0223-27-411A	1	T=3.35MM			
0223-27-412A	1	T=3.38MM			
0223-27-413A	1	T=3.41MM			
0223-27-414A	1	T=3.44MM			
0223-27-415A	1	T=3.47MM			
27-431		SPACER			
PA01-27-431	1				
27-600		CASING,DIFFERENTIAL			
MA02-27-600	1				
27-604		BOLT,CARRIER			
M053-27-604	1	(ILLUST. NO.1)			
M053-27-605	1	(ILLUST. NO.2)			
27-609		PLATE,BAFFLE-DIFF CASING			
MUA1-27-609A	1				
28-890A		RUBBER,SUB FRAME MTG			
NA01-28-890	2				

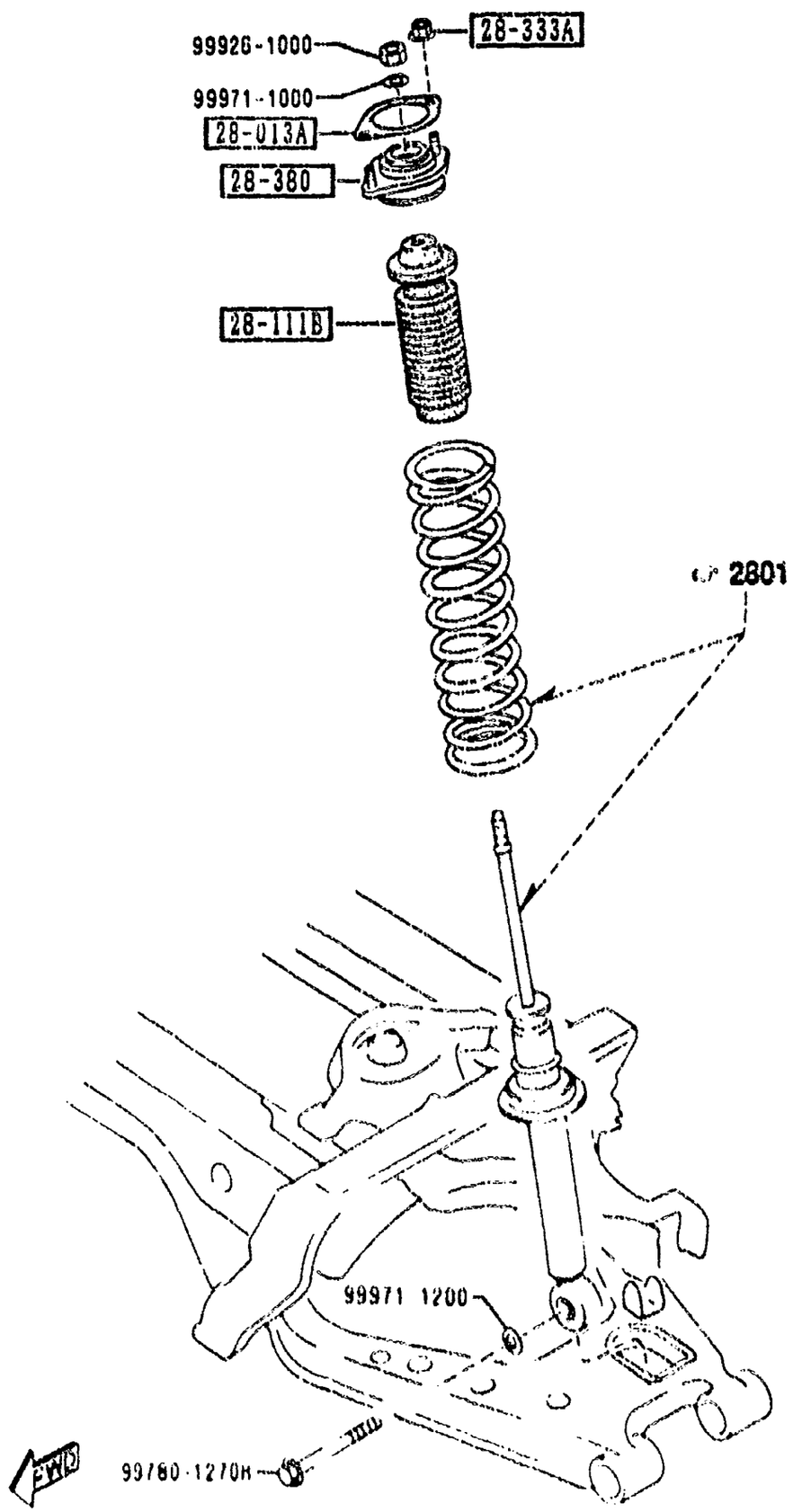

PART NO.	QTY	MODEL/RESTRICTION	MODEL/RESTRICTION	MODEL/RESTRICTION	FROM-TO
28-013A		SHEET,RUBBER			
G030-20-013A	2				
28-111B		STOPPER,BUMP			
NA01-28-111	2	(EXC.BILSTEIN DAMP.)			
N021-34-111	2	(BILSTEIN DAMP.)			
28-333A		NUT,FLANGE			
H001-28-333	4				
28-380		RUBBER,MOUNTING			
NA01-20-380A	2				

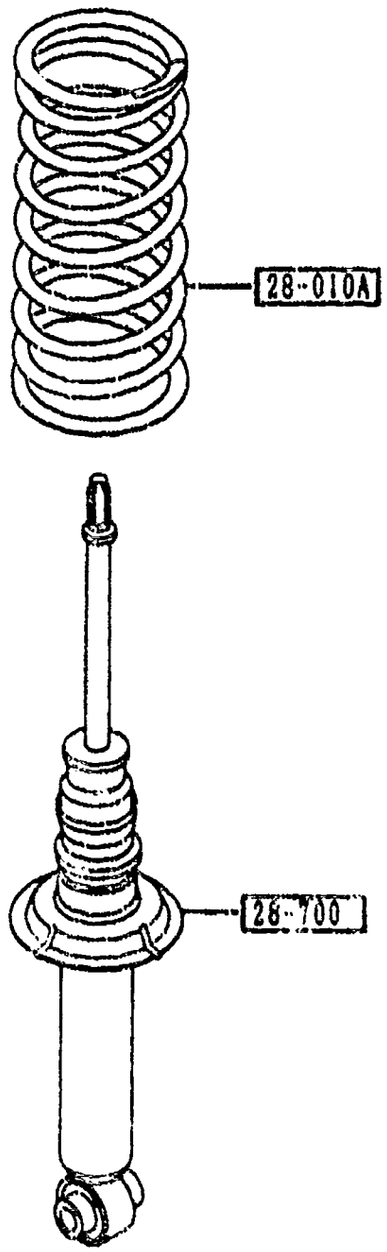

PART NO.	QTY	MODEL/RESTRICTION	MODEL/RESTRICTION	MODEL/RESTRICTION	FROM-TO
28-010A		SPRING,COIL-REAR			
NA01-28-011C	2	((MT)>(EXC.BILSTEIN DAMP.))			
NA03-28-011A	2	(AT)			
N021-28-011	2	((MT)>(BILSTEIN DAMP.))			
28-700		DAMPER,REAR			
N023-28-700A	2	(BILSTEIN DAMP.)			
N018-28-700A AN(N018-28-700B)	2				-3914
N018-28-700B	2	(EXC.BILSTEIN DAMP.)			3914-

3914 NASeee-503535

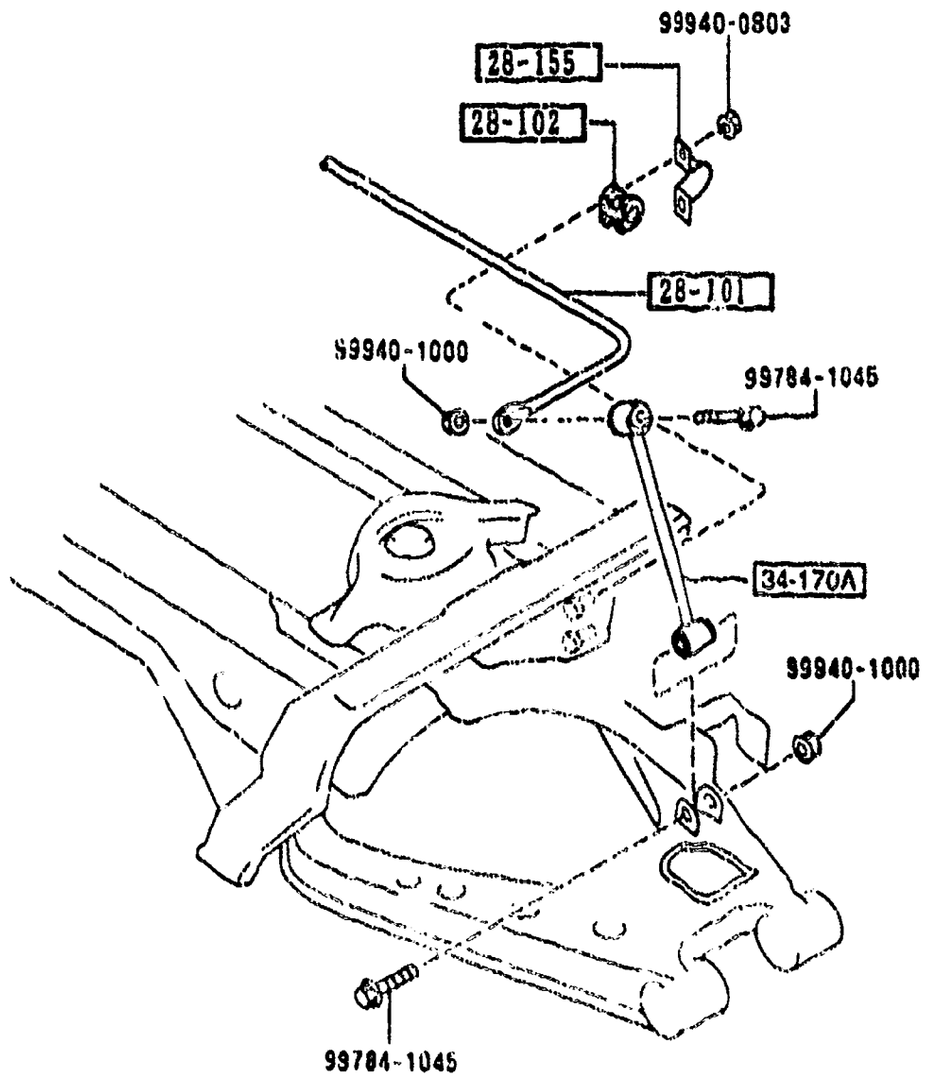

PART NO.	QTY	MODEL/RESTRICTION	MODEL/RESTRICTION	MODEL/RESTRICTION	FROM-TO
28-101		STABILIZER,RR			
N023-28-151	1				
28-102		BUSH,STABILIZER-RR			
N023-28-156	2				
28-155		PLATE,STABILIZER-RR			
FB01-28-155	2				
34-170A		LINK,CONTROL-STAB			
NA01-34-170	2				

2830 REAR LOWER ARMS & SUB FRAME

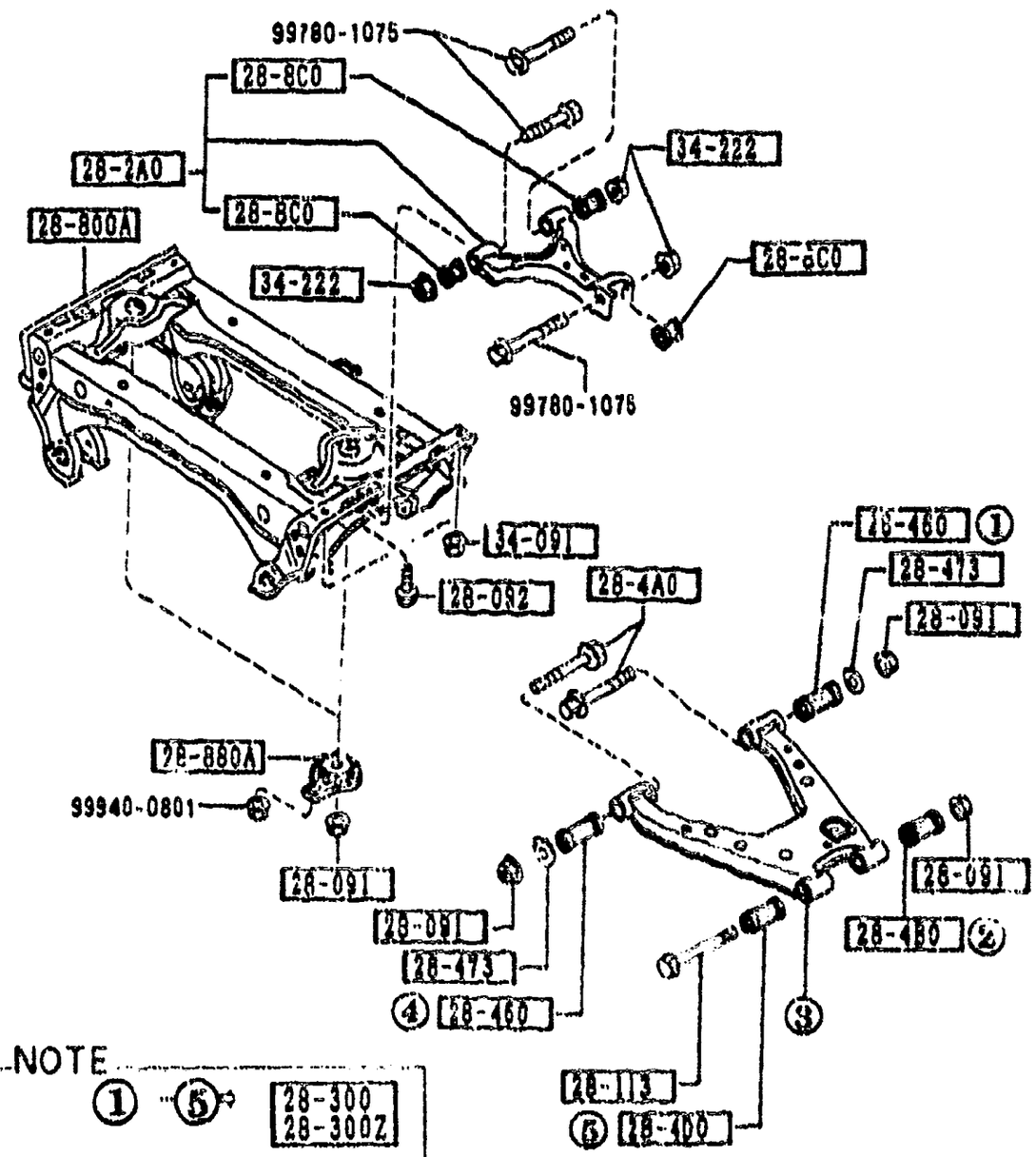

NOTE

① ⋯ ⑤ 28-300 / 28-300Z

THE D CODE OF 28-300 / 28-300Z CONSISTS OF FIGURE NUMBERS ① THROUGH ⑤.

PART NO.	QTY	MODEL/RESTRICTION	MODEL/RESTRICTION	MODEL/RESTRICTION	FROM-TO
28-091 B037-28-091	8	NUT			
28-092 NA01-28-092	2	BOLT,CONTROL LINK			
28-113 NA01-28-113	2	BOLT			
28-2A0 NA01-28-2A0B	2	ARM,UPPER-REAR			
28-300 NA01-28-300	1	ARM(R),LOWER-REAR			
28-300Z NA01-28-350	1	ARM(L),LOWER-REAR			
28-4A0 NA01-[illegible]4A0	4	BOLT,ADJUST			
[illegible] NA01-28-4B0	2	BUSHING,RUBBER-LOWER ARM			
28-4D0 NA01-28-4D0	2	BUSHING,RUBBER-LOWER ARM			
28-460 NA01-28-460	4	BUSHING,LOWER ARM			
28-473 NA01-28-473	4	PLATE,CAM-SUB FRAME			
28-8C0 NA01-28-8C0B	6	BUSHING,RUBBER			
28-800A NA75-28-800	1	MEMBER,CROSS			
28-880A NA01-28-880B	2	WASHER,STOP			

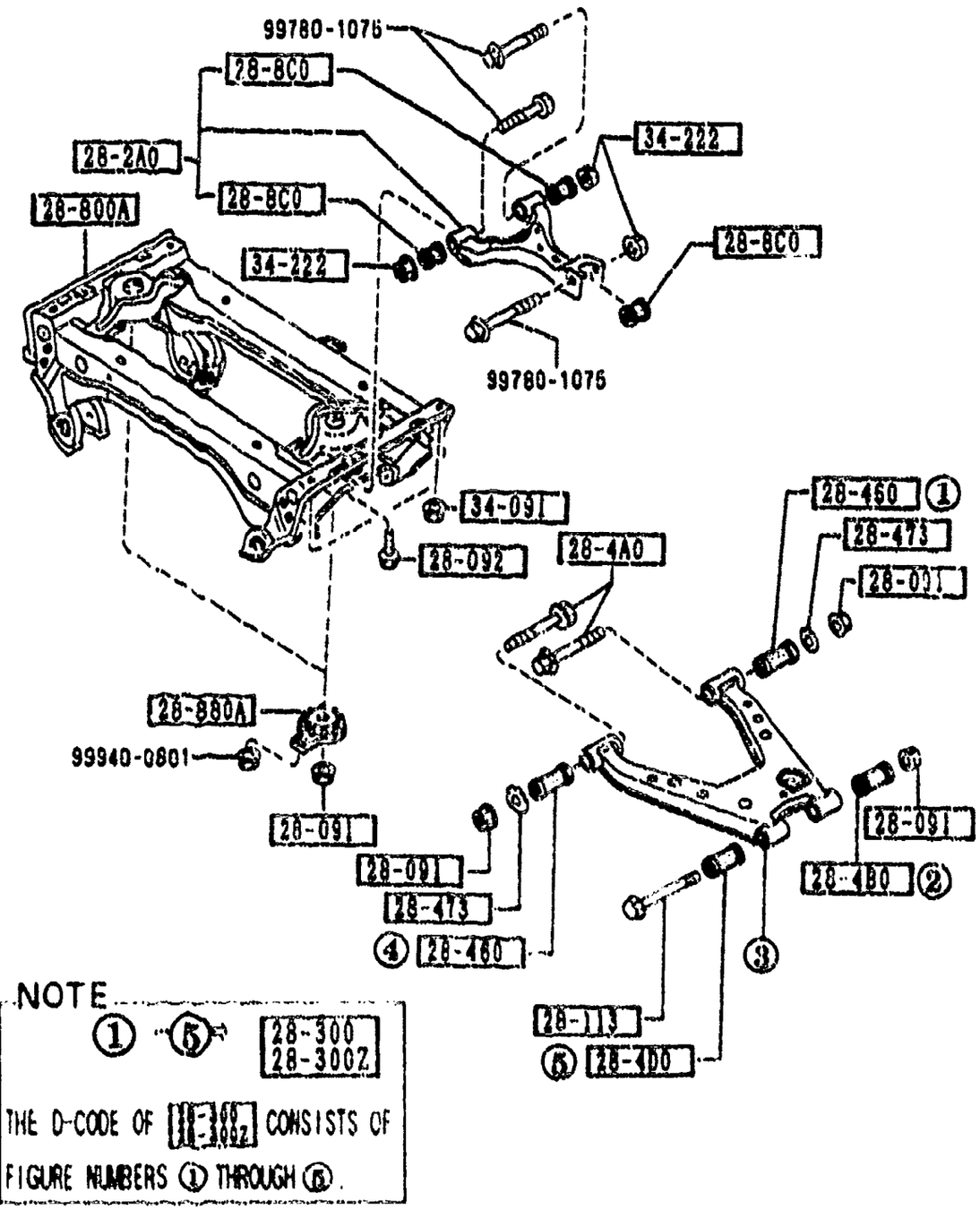

PART NO.	QTY	MODEL/RESTRICTION	MODEL/RESTRICTION	MODEL/RESTRICTION	FROM-TO
34-091		NUT			
FB01-34-091	4				
34-222		NUT			
8871-34-222	6				

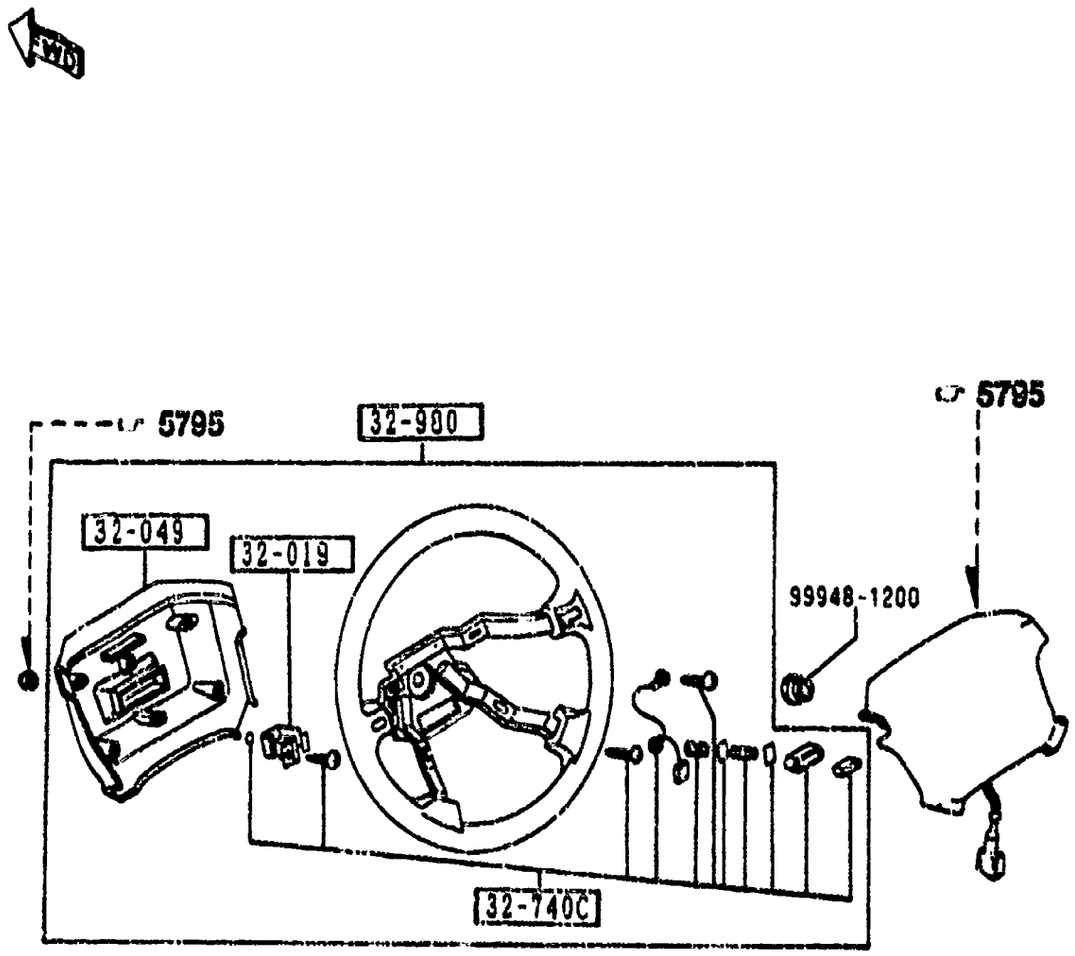

PART NO.	QTY	MODEL/RESTRICTION	MODEL/RESTRICTION	MODEL/RESTRICTION	FROM-TO
32-019		BRACKET,COUPLER			
NA01-32-019	1				
32-049		COVER,WHEEL CORE			
NA01-32-049	1				
32-740C		PARTS SET,ST. WHEEL			
NA01-32-750	1				
32-980		BOSS,STEERING WHEEL			
NA01-32-980C	1	BASE, (URETHANE WHEEL)			
NA02-32-980C	1	PKG-A, PKG-B, PKG-C, RICO-OPT-PKG, (LEATHER WHEEL)			

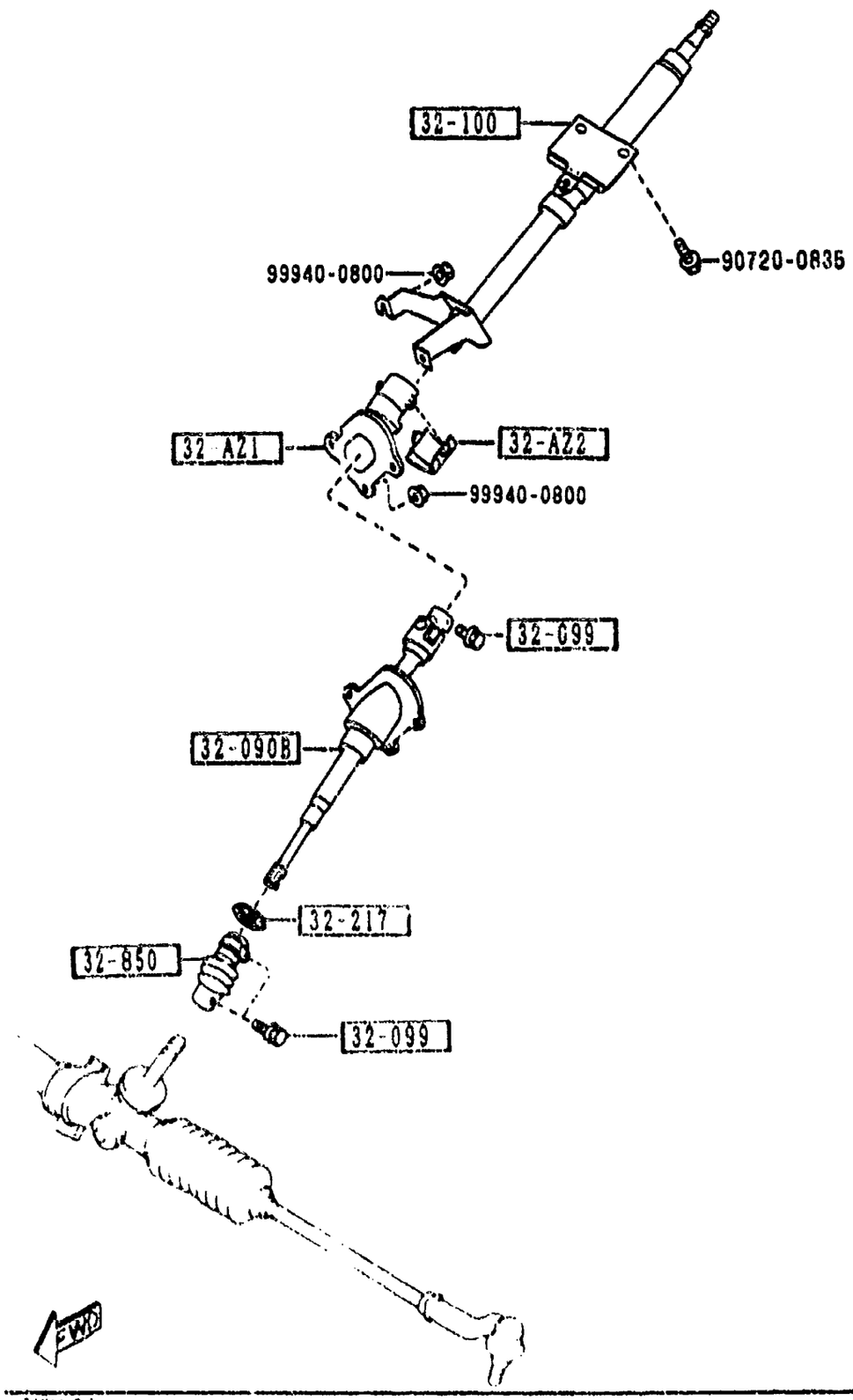

PART NO.	QTY	MODEL/RESTRICTION	MODEL/RESTRICTION	MODEL/RESTRICTION	FROM-TO
32-AZ1		COVER,JOINT-UPPER			
NA75-32-AZ1	1				
32-AZ2		COVER,JOINT-LOWER			
NA01-32-AZ2A	1				
32-090B		SHAFT,INTERMED.			
NA01-32-090C	1	BASE, (W/O POWER STEERING)			
NA02-32-090C	1	PKG-A, PKG-B, PKG-C, RICO-OPT-PKG, (W/POWER STEERING)			
32-099		BOLT,SHAFT			
B455-32-099	3				
32-100		SHAFT,ENGY.ABSORBER			
NA75-32-100 A (NA75-32-100A)	1				-3C01
NA75-32-100A	1				3C01-
32-217		GROMMET			
NA01-32-217	1				
32-850		JOINT,STEERING			
NA01-32-850A	1				

3C01 NA3###-507607

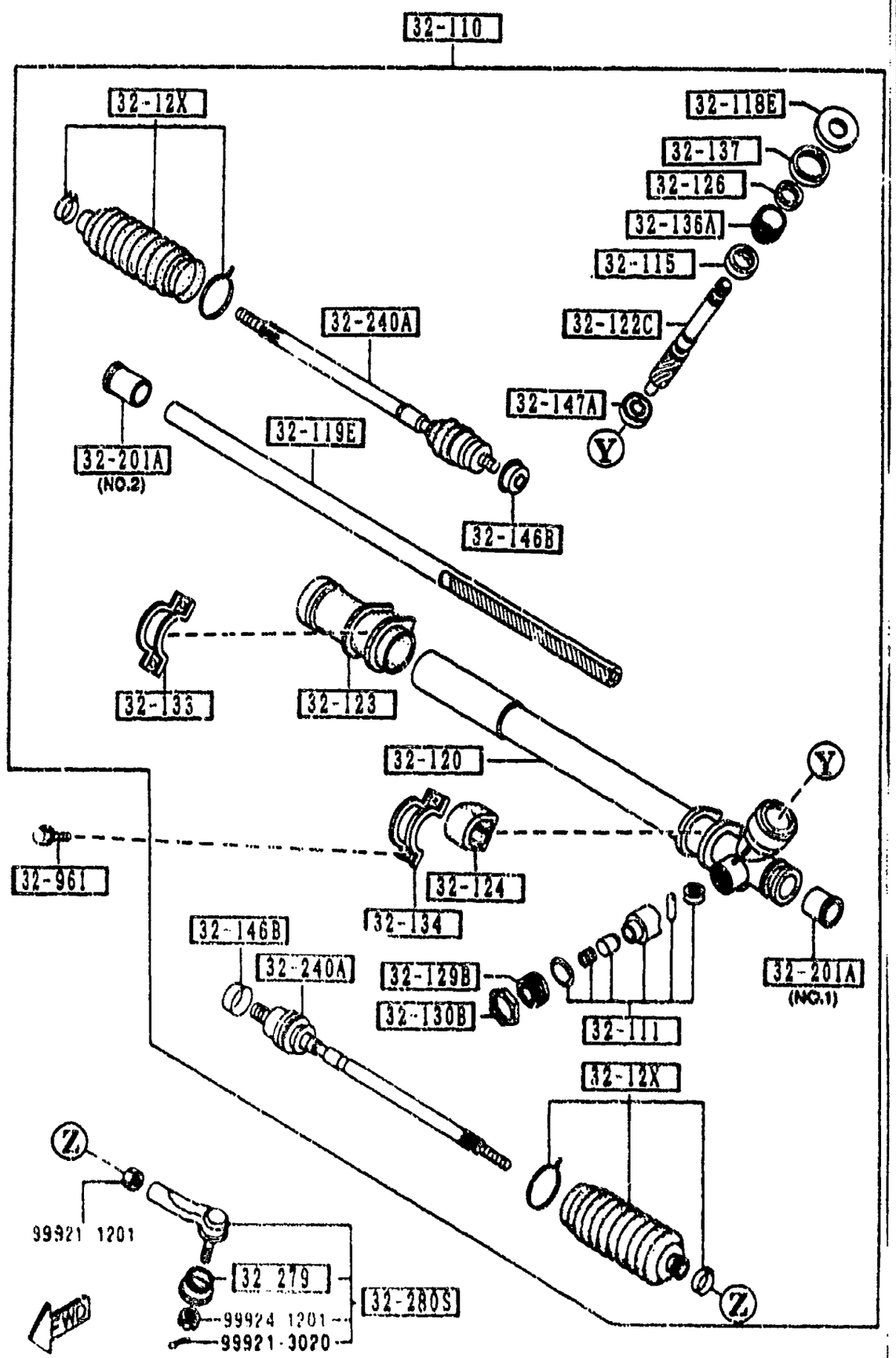

AUNA04

PART NO.	QTY	MODEL/RESTRICTION	MODEL/RESTRICTION	MODEL/RESTRICTION	FROM-TO
32-110 NA01-32-110	1	GEAR,STEERING			
32-111 GJ21-32-111	1	YOKE,SUPPORT			
32-115 G030-32-115	1	BEARING,ST. GEAR			
32-118E NA01-32-118	1	COVER,DUST-ST. GEAR			
32-119E NA01-32-119	1	RACK,STEERING GEAR			
32-12X NA01-32-12X	2	BOOT SET,ST. GEAR			
32-120 NA01-32-120	1	HOUSING,GEAR			
32-122C NA01-32-122	1	PINION,STEERING GEAR			
32-123 NA01-32-123	1	RUBBER,MOUNTING			
32-124 NA01-32-124	1	RUBBER,MOUNTING			
32-126 G030-32-126	1	SEAL,SHAFT			
32-129B HE01-32-129	1	PLUG,PINION			
32-130B S083-32-137	1	NUT,LOCK			
32-133 BC51-32-133	1	PLATE,CLAMP			

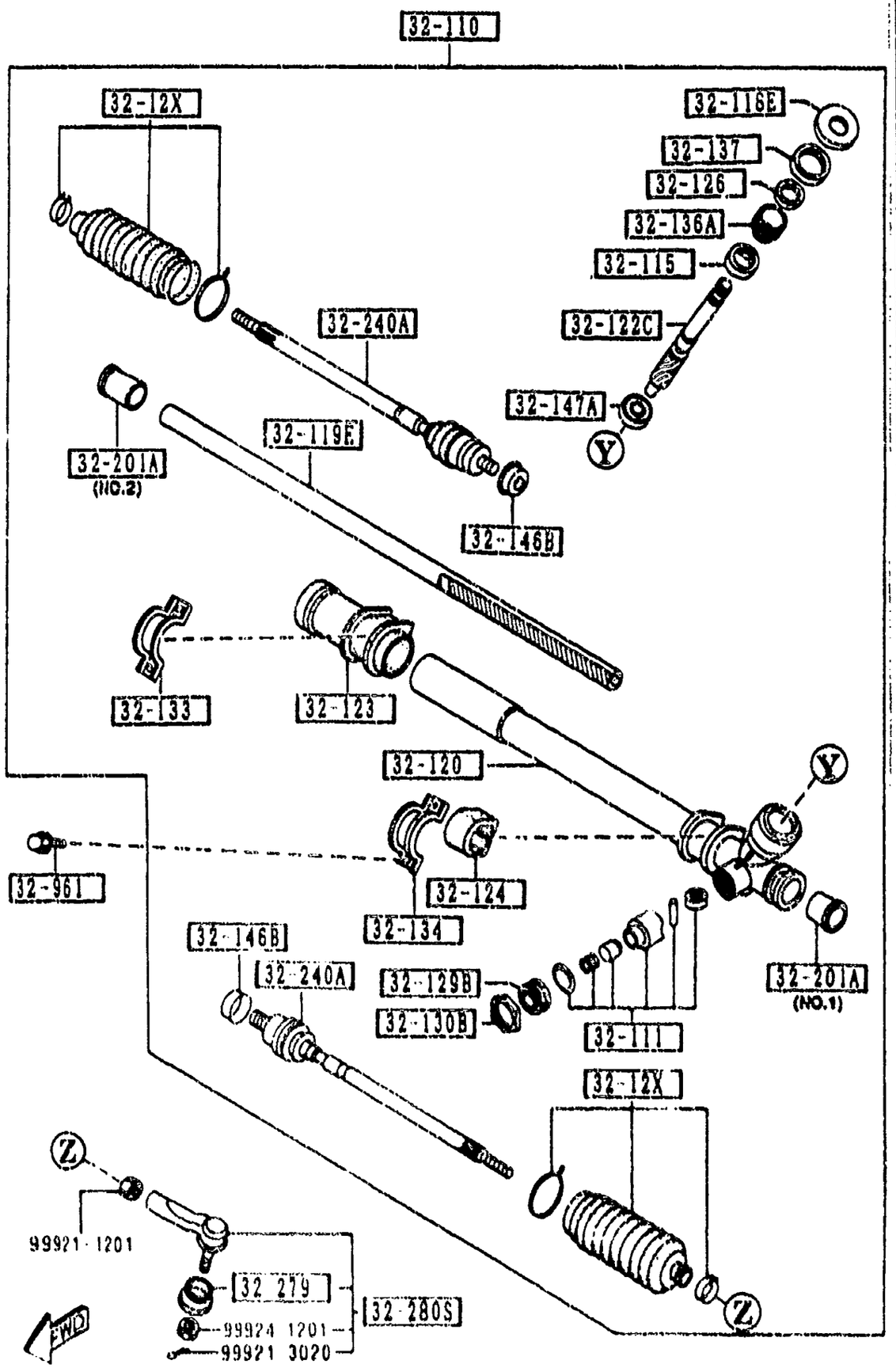

PART NO.	QTY	MODEL/RESTRICTION	MODEL/RESTRICTION	MODEL/RESTRICTION	FROM-TO
32-134		PLATE,CLAMP			
NA01-32-134	1				
32-136A		COVER,REAR			
G030-32-136	1				
32-137		NUT,LOCK			
S030-32-137	1				
32-146B		WASHER			
HA14-32-146	2				
32-147A		BEARING,PINION			
G030-32-147	1				
32-201A		BUSHING,RACK-ST. GEAR			
HE01-32-201	1	(ILLUST. NO.1)			
HE09-32-201	1	(ILLUST. NO.2)			
32-240A		JOINT,BALL			
NA01-32-240	2				
32-279		SEAL,DUST-BALL JOINT			
B455-32-279	2				
32-280S		JOINT SET,BALL			
BAN1-32-280	2	(EXC.BILSTEIN DAMP.)			
BAN2-32-280	2	(BILSTEIN DAMP.)			
32 961		BOLT			
G030-32-961	4				

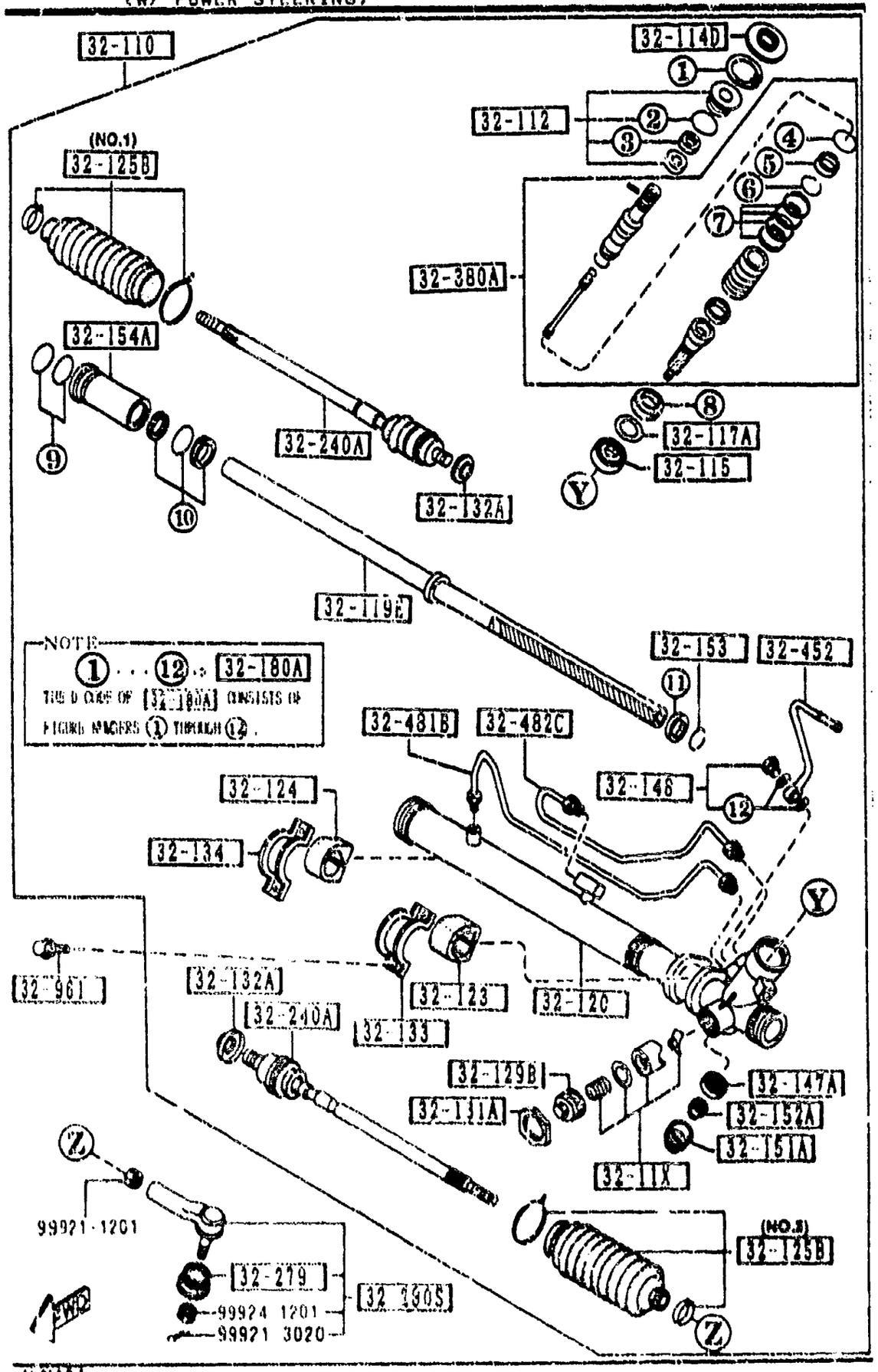

ALNA04

3220 A-1 STEERING GEAR
(W/ POWER STEERING)

PART NO.	QTY	MODEL/RESTRICTION	MODEL/RESTRICTION	MODEL/RESTRICTION	FROM-TO
32-11X		YOKE SET,SUPPORT-ST. GEAR			
NA02-32-11X	1				
32-110		GEAR,STEERING			
NA02-32-110	1				
32-112		COVER,DUST			
NA02-32-112	1				
32-114D		COVER,DUST-ST. GEAR			
NA02-32-114	1				
32-115		BEARING,ST. GEAR			
NA02-32-115	1				
32-117A		SPACER,STEERING GEAR			
NA02-32-121	1				
32-119E		RACK,STEERING GEAR			
NA02-32-119	1				
32-120		HOUSING,GEAR			
NA02-32-120	1				
32-123		RUBBER,MOUNTING			
NA02-32-123	1				
32-124		RUBBER,MOUNTING			
NA02-32-124	1				
32-125B		BOOT,RACK			
NA02-32-125	1	(ILLUST. NO.1)			
NA02-32-135	1	(ILLUST. NO.2)			
32-129B		PLUG,PINION			
NA02-32-129	1				
32-131A		NUT,LOCK-RACK			
NA02-32-131	1				

3220 A-2 STEERING GEAR
(W/ POWER STEERING)

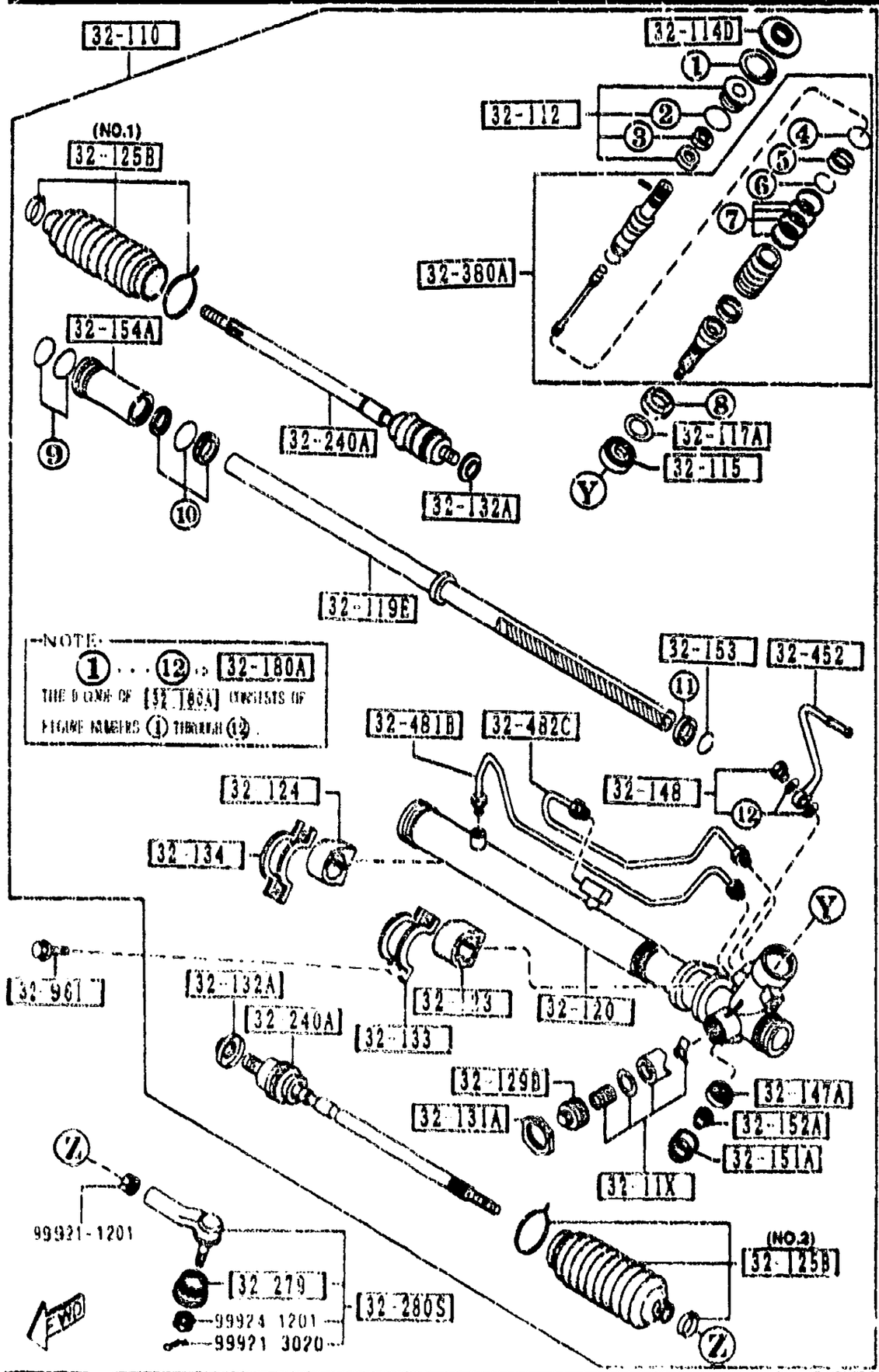

PART NO.	QTY	MODEL/RESTRICTION	MODEL/RESTRICTION	MODEL/RESTRICTION	FROM-TO
32-132A NA02-32-126	2	WASHER			
32-133 NA02-32-133	1	PLATE,CLAMP			
32-134 NA02-32-134	1	PLATE,CLAMP			
32-147A NA02-32-147	1	BEARING,PINION			
32-148 D002-32-148	1	EYE BOLT KIT,ST. GEAR			
32-151A NA02-32-151	1	PLUG,PINION-ST.GEAR			
32-152A NA02-32-152	1	NUT,ADJUST			
32-153 NA02-32-153	1	RING,BACK UP			
32-154A NA02-32-154	1	HOLDER,STEERING GEAR			
32-180A NA02-32-180	1	SEAL KIT,ST. GEAR			
32-240A NA02-32-240	2	JOINT,BALL			
32-279 B455-32-279	2	SEAL,DUST-BALL JOINT			
32-280S 8AN1-32-280	2	JOINT SET,BALL (EXC.BILSTEIN DAMP.)			
8AN2-32-280	2	(BILSTEIN DAMP.)			

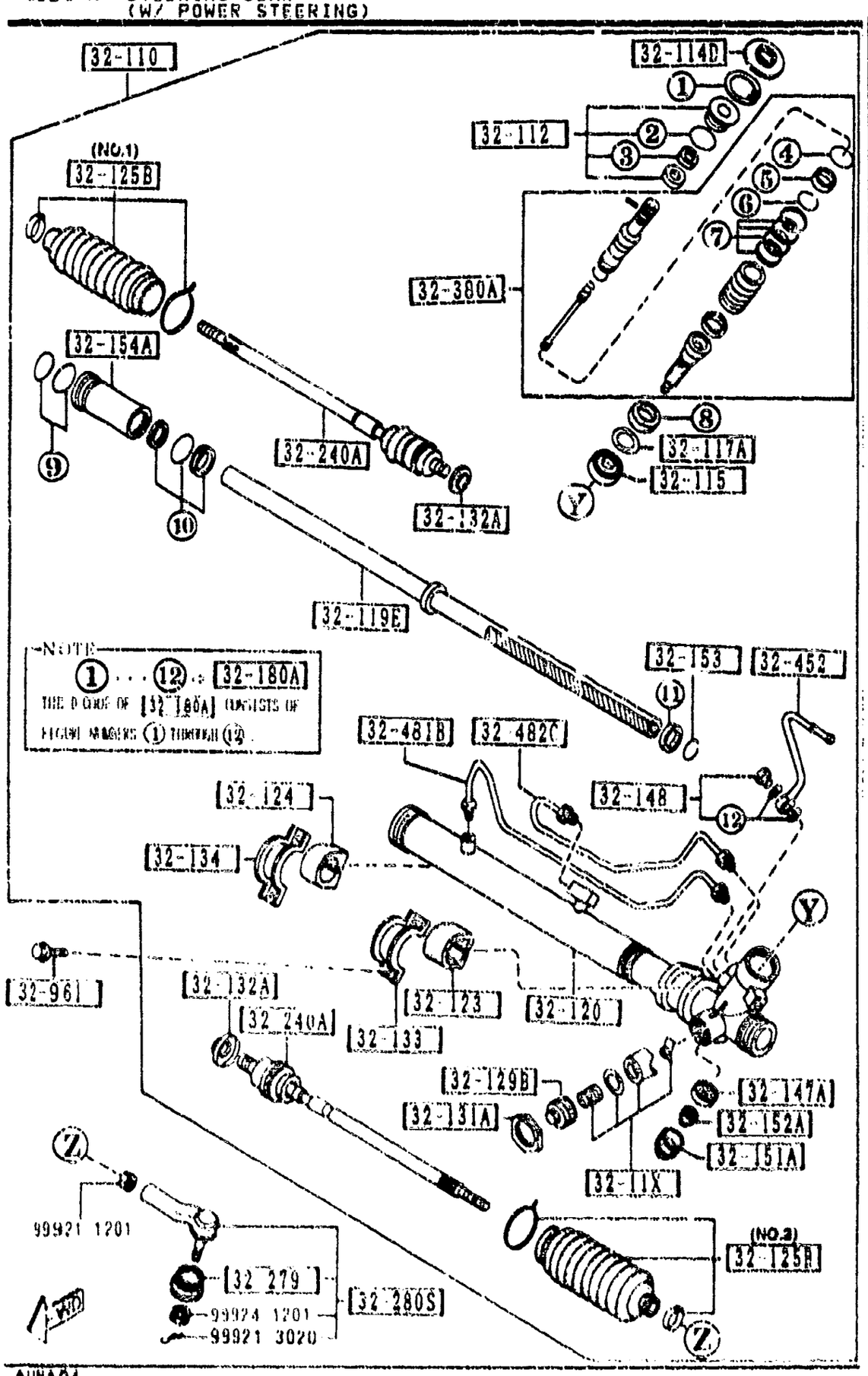

PART NO.	QTY	MODEL/RESTRICTION	MODEL/RESTRICTION	MODEL/RESTRICTION	FROM-TO
32-380A		VALVE,ST. GEAR			
NA02-32-380	1				
32-452		PIPE'B',ST. GEAR			
NA02-32-452	1				
32-481B		PIPE'A',CYLINDER			
NA02-32-481	1				
32-482C		PIPE'B',CYLINDER			
NA02-32-482	1				
32-961		BOLT			
G030-32-961	4				

3240 POWER STEERING SYSTEM

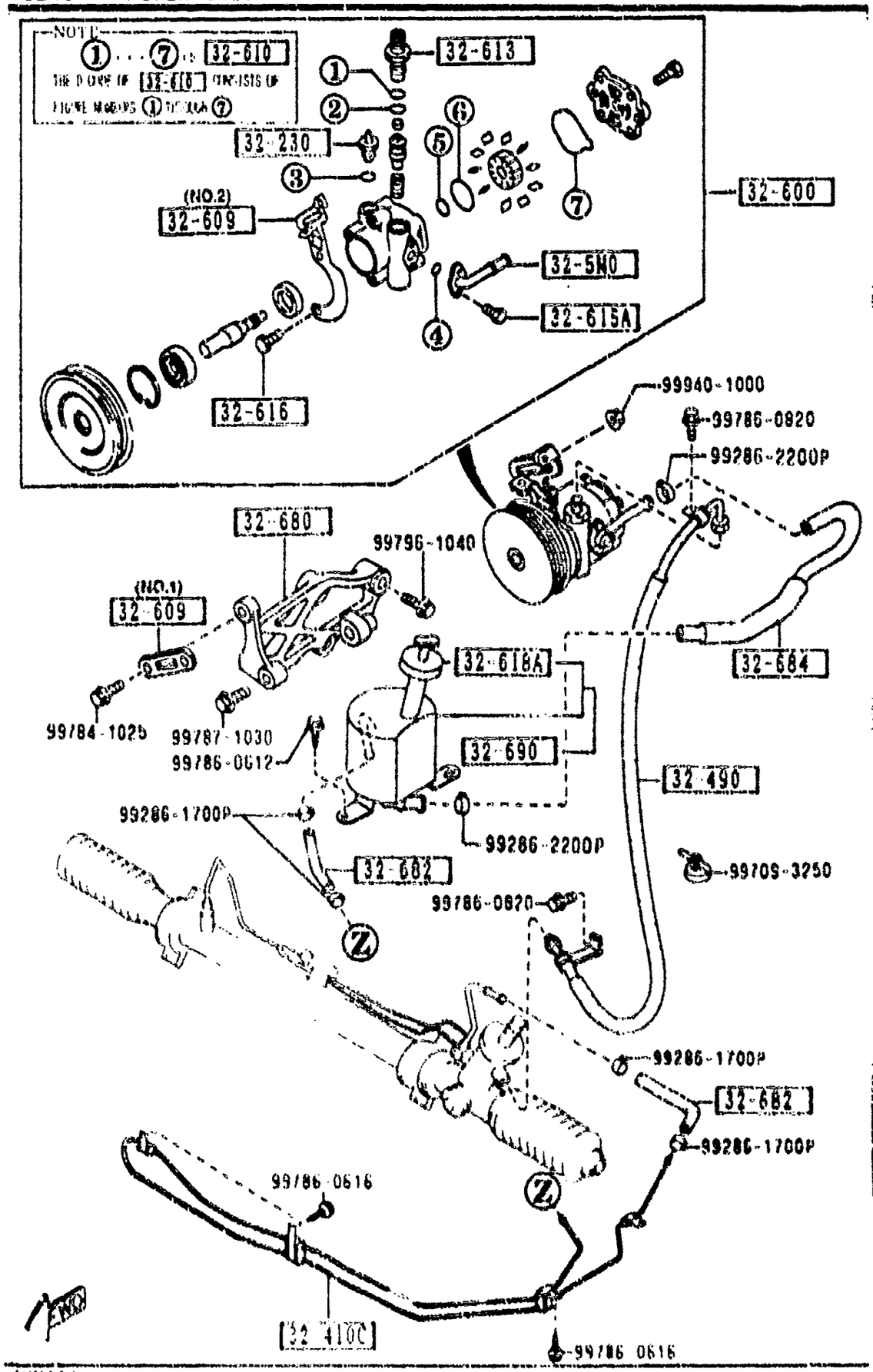

PART NO	QTY	MODEL/RESTRICTION	MODEL/RESTRICTION	MODEL/RESTRICTION	FROM-TO
32-230		SENSOR,STEERING PRESSURE			
B456-32-230	1				
32-410C		PIPE,RETURN			
HA02-32-410A	1				
32-490		HOSE,PRESSURE			
HA02-32-490C	1				
32-5N0		PIPE,SUCTION			
N002-32-5N0	1				
32-600		PUMP,VANE			
N002-32-600B	1				
32-609		BRACKET,VANE PUMP			
HA02-32-609	1	KUROISHI TEKKO (ILLUST. NO.1)			
N002-32-609	1	NIHON POWER STEERING (ILLUST. NO.2)			
32-610		SEAL KIT,VANE PUMP			
N002-32-610	1				
32-613		NIPPLE,VANE PUMP			
N002-32-613	1				
32-615A		BOLT			
B456-32-615	2				
32-616		BOLT,VANE PUMP			
B456-32-616	2				
32-618A		CAP,VANE PUMP TANK			
HA02-32-691	1				
32-680		BRACKET,VANE PUMP			
HA02-32-680	1				
32-682		HOSE,RETURN			
HA02-32-682	1				

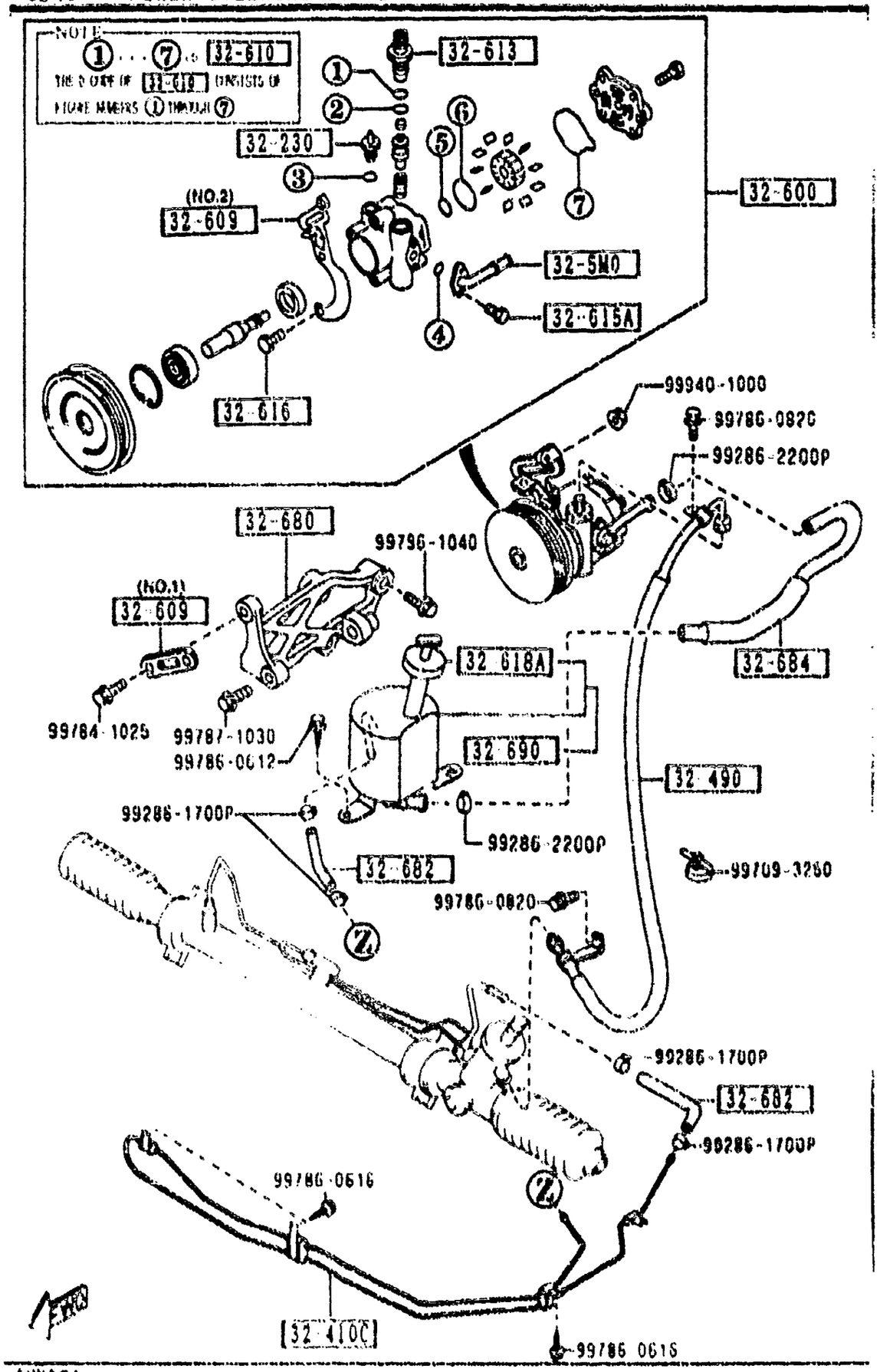

PART NO	QTY	MODEL/RESTRICTION	MODEL/RESTRICTION	MODEL/RESTRICTION	FROM TO
32-684		HOSE,RETURN			
NA02-32-684B	1				
32-690		TANK,VANE PUMP			
NA02-32-690A	1				

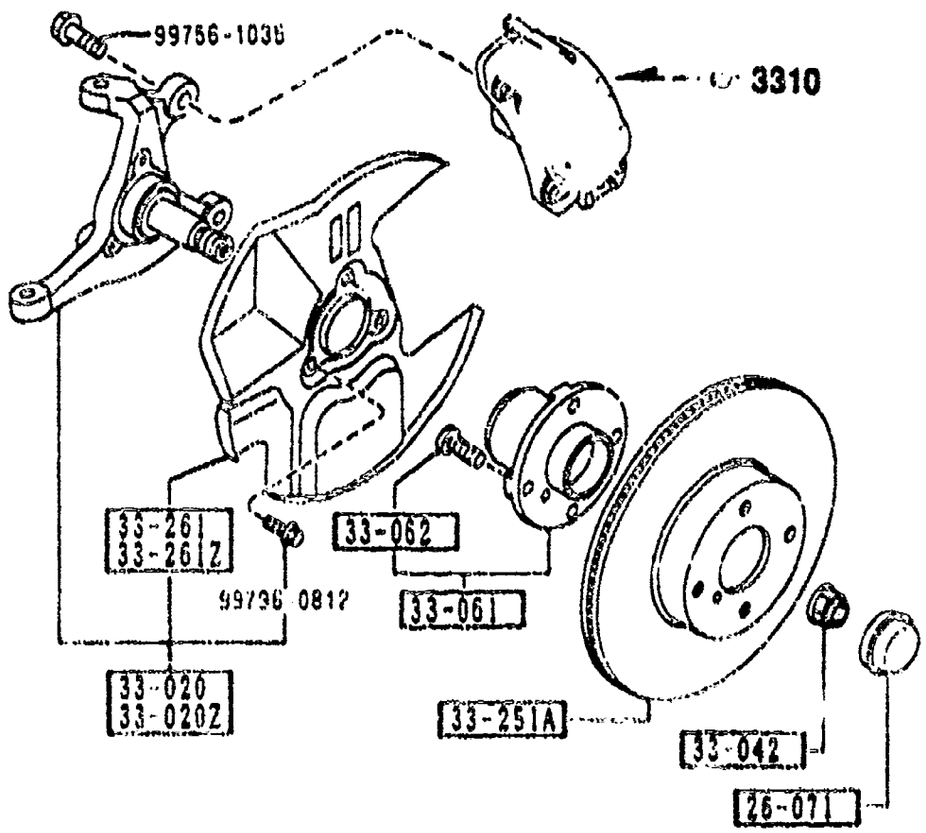

3300 -1 * FRONT AXLE (W/O ANTI LOCK BRAKE SYSTEM)

PART NO.	QTY	MODEL/RESTRICTION	MODEL/RESTRICTION	MODEL/RESTRICTION	FROM-TO
26-071		CAP,HUB			
B455-26-071	2				
33-020		KNUCKLE(R),STEERING			
NA01-33-020A	1				
33-020Z		KNUCKLE(L),STEERING			
NA01-33-030A	1				
33-042		NUT			
NA01-33-042B		W/WASHER			
AN(D06Y-33-042)	2				-4126
D06Y-33-042	2	W/WASHER			4126-
33-061		HUB,WHEEL			
NA01-33-04X	2				
33-062		BOLT,HUB			
B455-33-062	8				
33-251A		PLATE,DISC			
NA75-33-25X	2				
33-261		COVER(R),DUST			
NA75-33-261	1				
33-261Z		COVER(L),DUST			
NA75-33-271	1				

4126 NA3◆◆◆-511068

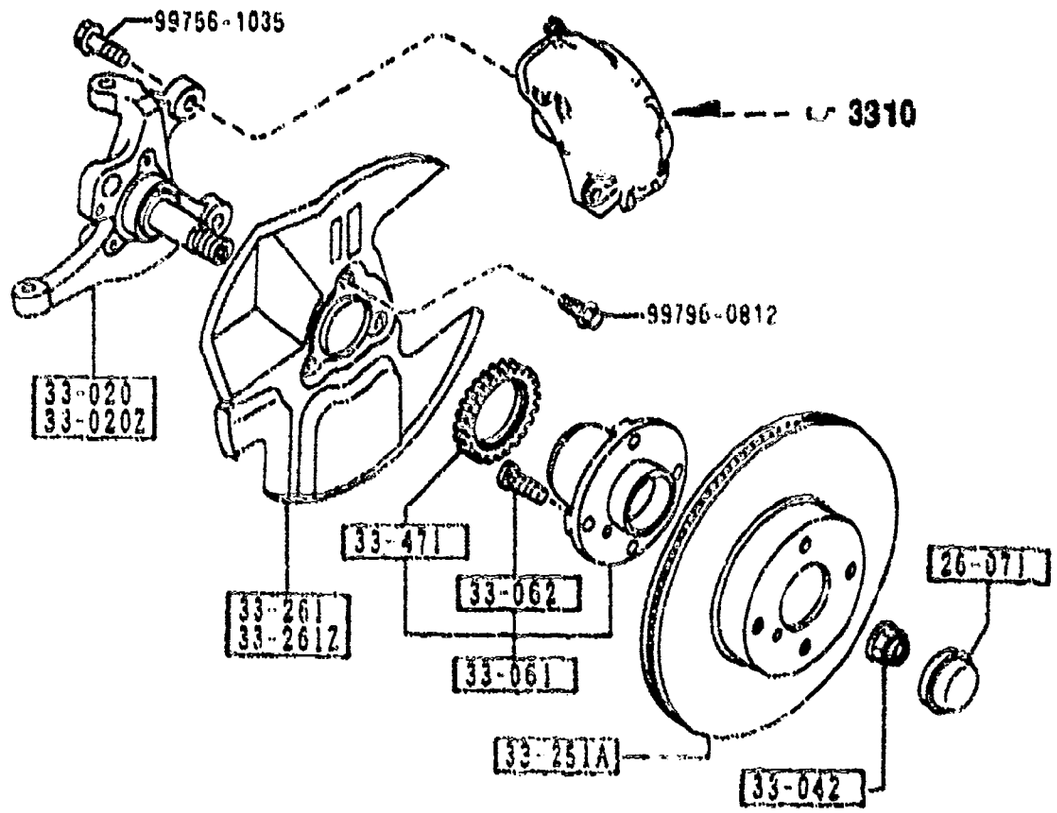

PART NO.	QTY	MODEL/RESTRICTION	MODEL/RESTRICTION	MODEL/RESTRICTION	FROM-TO
26-071		CAP,HUB			
B455-26-071	2				
33-020		KNUCKLE(R),STEERING			
NA23-33-021A	1				
33-020Z		KNUCKLE(L),STEERING			
NA23-33-031A	1				
33-042		NUT			
NA01-33-042B		W/WASHER			
AN(D06Y-33-042)	2				-4126
D06Y-33-042	2	W/WASHER			4126-
33-061		HUB,WHEEL			
NA23-33-04XA	2				
33-062		BOLT,HUB			
B455-33-062	8				
33-251A		PLATE,DISC			
NA75-33-25X	2				
33-261		COVER(R),DUST			
NA75-33-261	1				
33-261Z		COVER(L),DUST			
NA75-33-271	1				
33-471		ROTOR,SENSOR-FRT A.B.S.			
NA23-33-471B	2				

4126 NAS###-511068

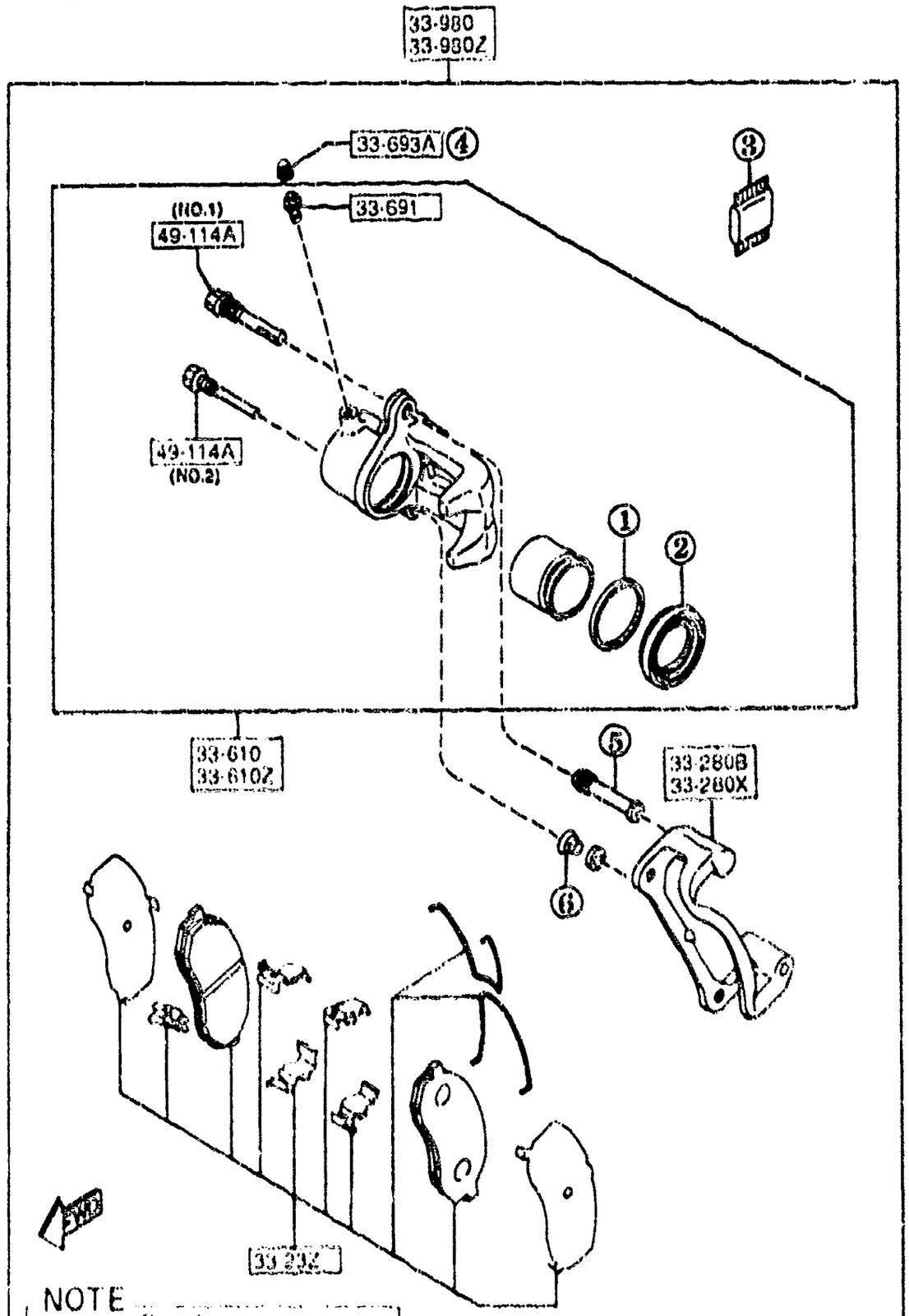

NOTE

①-⑥ ⇒ 33-26Z

THE D-CODE OF 33-26Z CONSISTS OF FIGURE NUMBERS ① THROUGH ⑥.

THOUGH ILLUSTRATIONS OF D-CODE 33-23Z AND 33-26Z ARE FOR LEFT SIDE ONLY, QUANTITIES OF THESE D-CODES IN THE TEXT ARE FOR ONE VEHICLE.

PART NO.	QTY	MODEL/RESTRICTION	MODEL/RESTRICTION	MODEL/RESTRICTION	FROM-TO
33-23Z NAY5-33-23Z	1	PAD SET,FRT CALIPER			
33-26Z NAY5-33-26Z	1	SEAL & BOOT SET,CAL.-FRT			
33-280B NA75-33-281	1	SUPPORT(R),MOUNTING			
33-280X NA75-33-291	1	SUPPORT(L),MOUNTING			
33-610 NA75-33-61X	1	BODY & PISTON(R),CALIPER			
33-610Z NA75-33-71X	1	BODY & PISTON(L),CALIPER			
33-691 B001-33-691	2	SCREW,BLEEDER			
33-693A 0259-33-693	2	CAP,BLEEDER SCREW			
33-980 NA75-33-980	1	CALIPER(R),FRT BRAKE			
33-980Z NA75-33-990	1	CALIPER(L),FRT BRAKE			
49-114A 8173-49-114	2	PIN,SLIDER (ILLUST. NO.1)			
8239-49-114	2	(ILLUST. NO.2)			

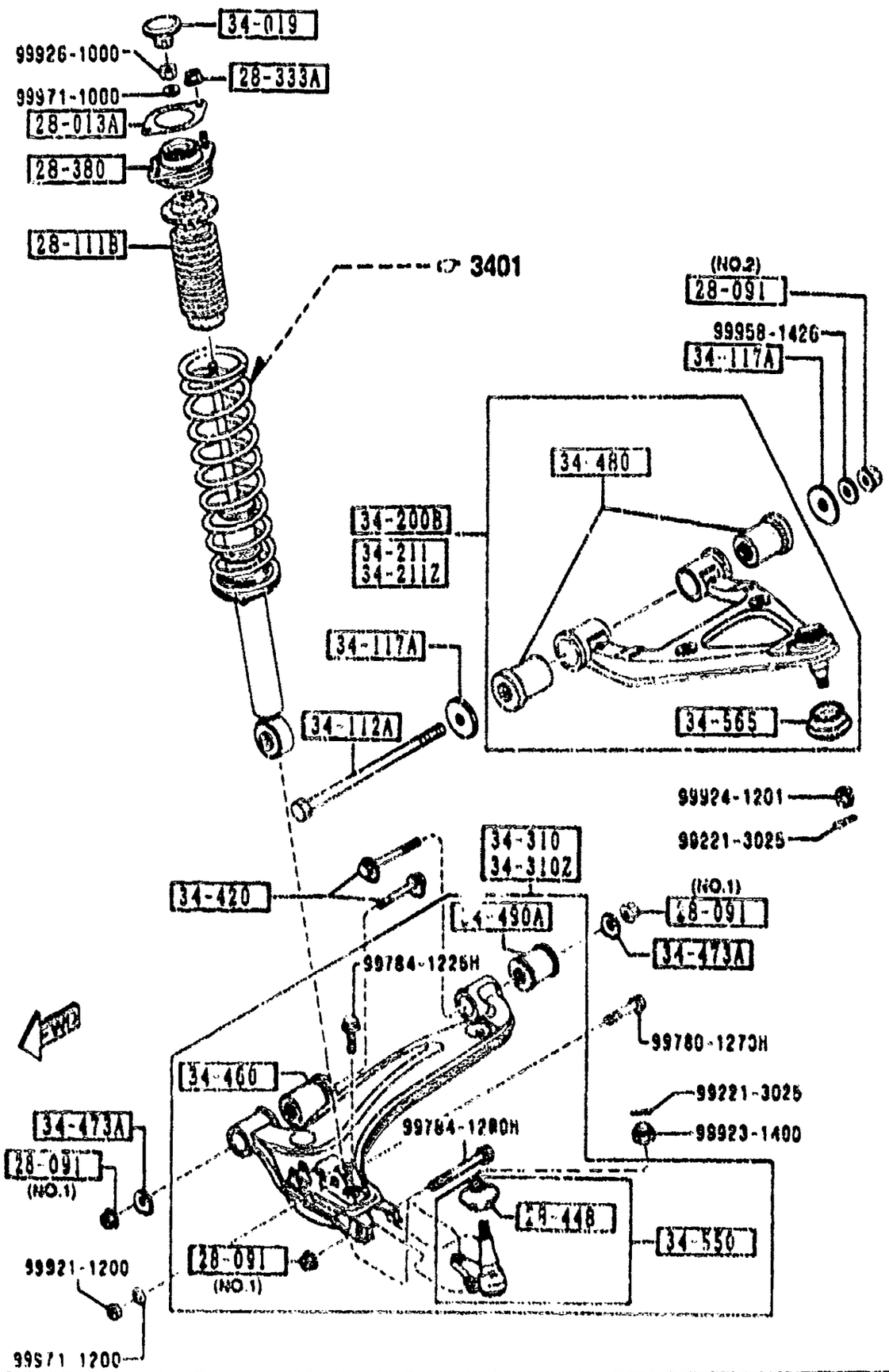

AUNA04

3400 -1 FRONT SUSPENSION MECHANISMS

PART NO.	QTY	MODEL/RESTRICTION	MODEL/RESTRICTION	MODEL/RESTRICTION	FROM-TO
28-013A		SHEET,RUBBER			
G030-28-013A	2				
28-091		NUT			
B037-28-091	6	(ILLUST. NO.1)			
FB01-28-091A	2	(ILLUST. NO.2)			
28-111B		STOPPER,BUMP			
N021-34-111	2				
28-333A		NUT,FLANGE			
H001-28-333	4				
28-380		RUBBER,MOUNTING			
NA01-28-380B	2				
28-448		SEAL,DUST-BALL JOINT			
H206-28-448	2				
34-019		CAP,DAMPER			
NA01-34-019	2				
34-112A		BOLT			
NA01-34-112	2				
34-117A		WASHER			
NA01-34-117A	4				
34-200B		ARM,UPPER-FR)			
HA01-34-200A	2	(W/O A.LOCK BRAKE)			
34-211		ARM(R),UPPER			
HA23-34-200	1	(A.LOCK BRAKE)			
34-212		ARM(L),UPPER			
HA23-34-250	1	(A LOCK BRAKE)			
34-310		ARM(R),LOWER			
NA75-34-300A	1				

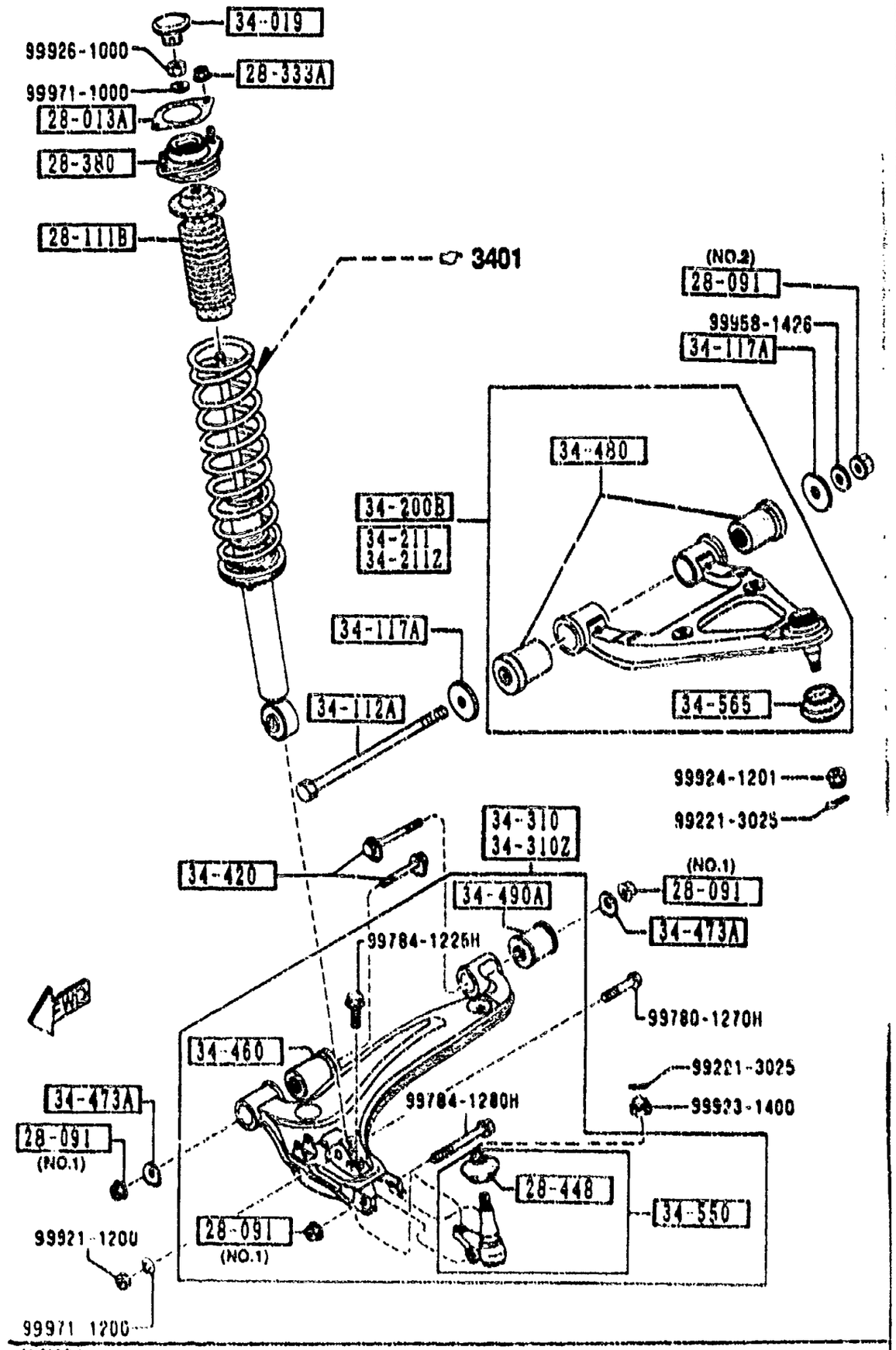

PART NO.	QTY	MODEL/RESTRICTION	MODEL/RESTRICTION	MODEL/RESTRICTION	FROM-TO
34-310Z NA75-34-350A	1	ARM(L),LOWER			
34-420 NA75-34-4A0	4	BOLT,ADJUST			
34-460 NA01-34-460A	2	BUSH,RUBBER-LWR ARM			
34-473A NA75-34-473	4	PLATE,CAM			
34-480 NA01-34-480A	4	BUSHING,RUBBER-LOWER ARM			
34-490A NA01-34-490	2	BUSHING,RUBBER			
34-550 NA01-34-550	2	BALL JOINT,LOWER			
34-565 NA01-34-548	2	SEAL,DUST			

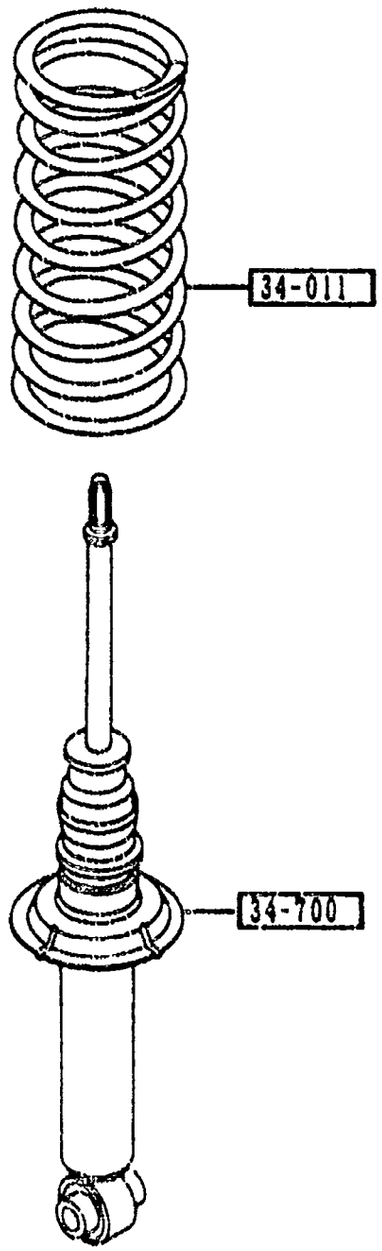

3401 -1 * FRONT SPRING & DAMPER

PART NO.	QTY	MODEL/RESTRICTION	MODEL/RESTRICTION	MODEL/RESTRICTION	FROM-TO
+---------+ | 34-011 | +---------+		SPRING,COIL-FRONT			
NA03-34-011	2	(MT)			
NA81-34-011	2	(AT)			
+---------+ | 34-700 | +---------+		DAMPER,FRONT			
N023-34-700C	2	((W/O A.LOCK BRAKE)> (BILSTEIN DAMP.))			
NA53-34-700A AN(NA53-34-700B)	2				-3914
N018-34-700A AN(N018-34-700B)	2				-3914
NA53-34-700B	2	(A.LOCK BRAKE)			3914-
N018-34-700B	2	((W/O A.LOCK BRAKE)> (EXC.BILSTEIN DAMP.))			3914-

3914 NA3###-503555

3410 CROSSMEMBER & STABILIZER

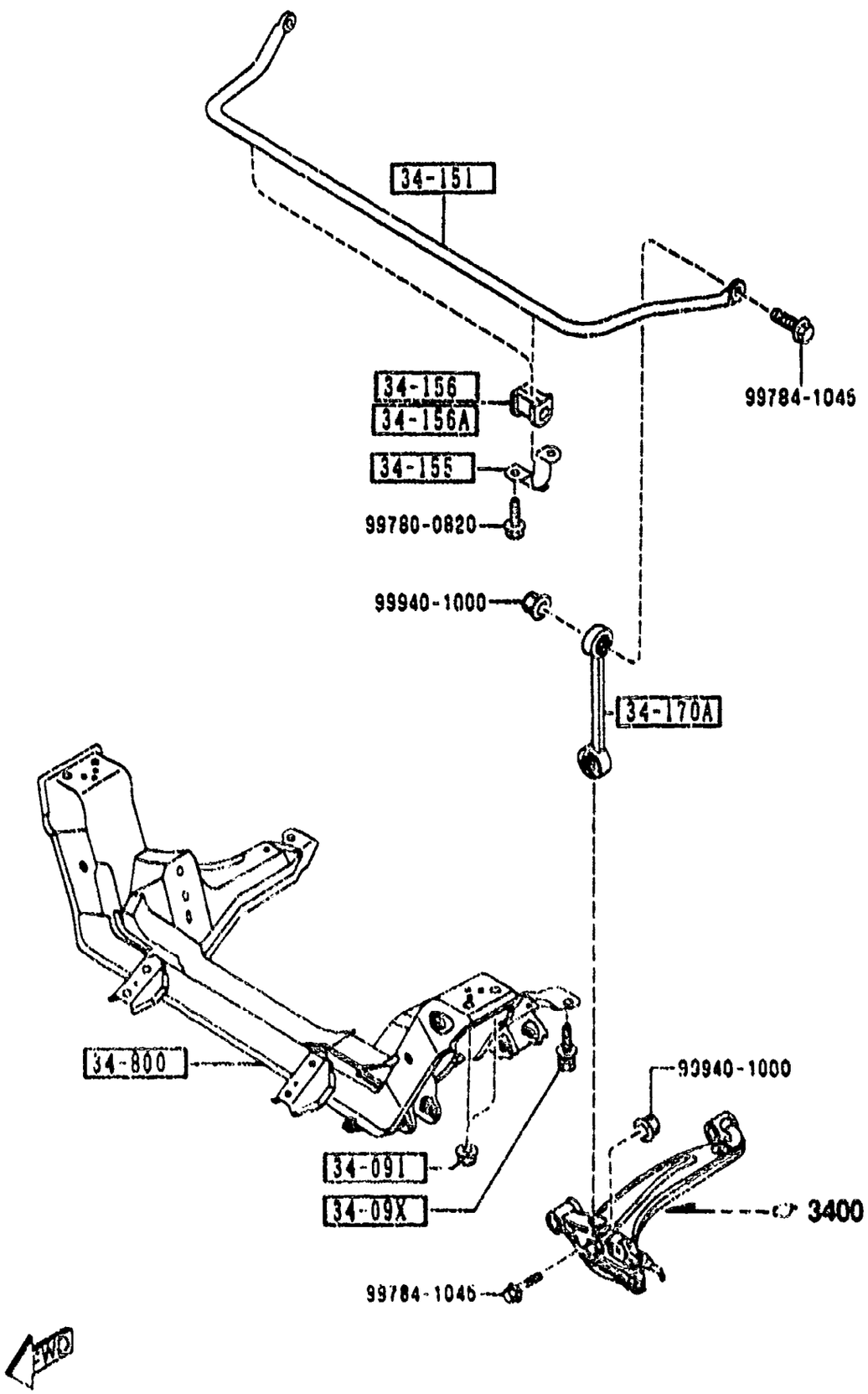

PART NO.	QTY	MODEL/RESTRICTION	MODEL/RESTRICTION	MODEL/RESTRICTION	FROM-TO
34-09X		BOLT			
NA01-34-09XA	4				
34-091		NUT			
FB01-34-091	4				
34-151		STABILIZER,FRONT			
NA75-34-151	1	(BILSTEIN DAMP.)			
NA80-34-151	1	(EXC.BILSTEIN DAMP.)			
34-155		PLATE,STABILIZER			
FB01-34-155	2				
34-156		BUSH,STABILIZER-FRT			
NA75-34-156	2	(BILSTEIN DAMP.)			
34-156A		RUBBER,STAB -FRT			
NA01-34-156A	2	(EXC.BILSTEIN DAMP.)			
34-170A		LINK,CONTROL-STAB			
NA01-34-170	2				
34-800		MEMBER,CROSS			
NA01-34-800C	1				

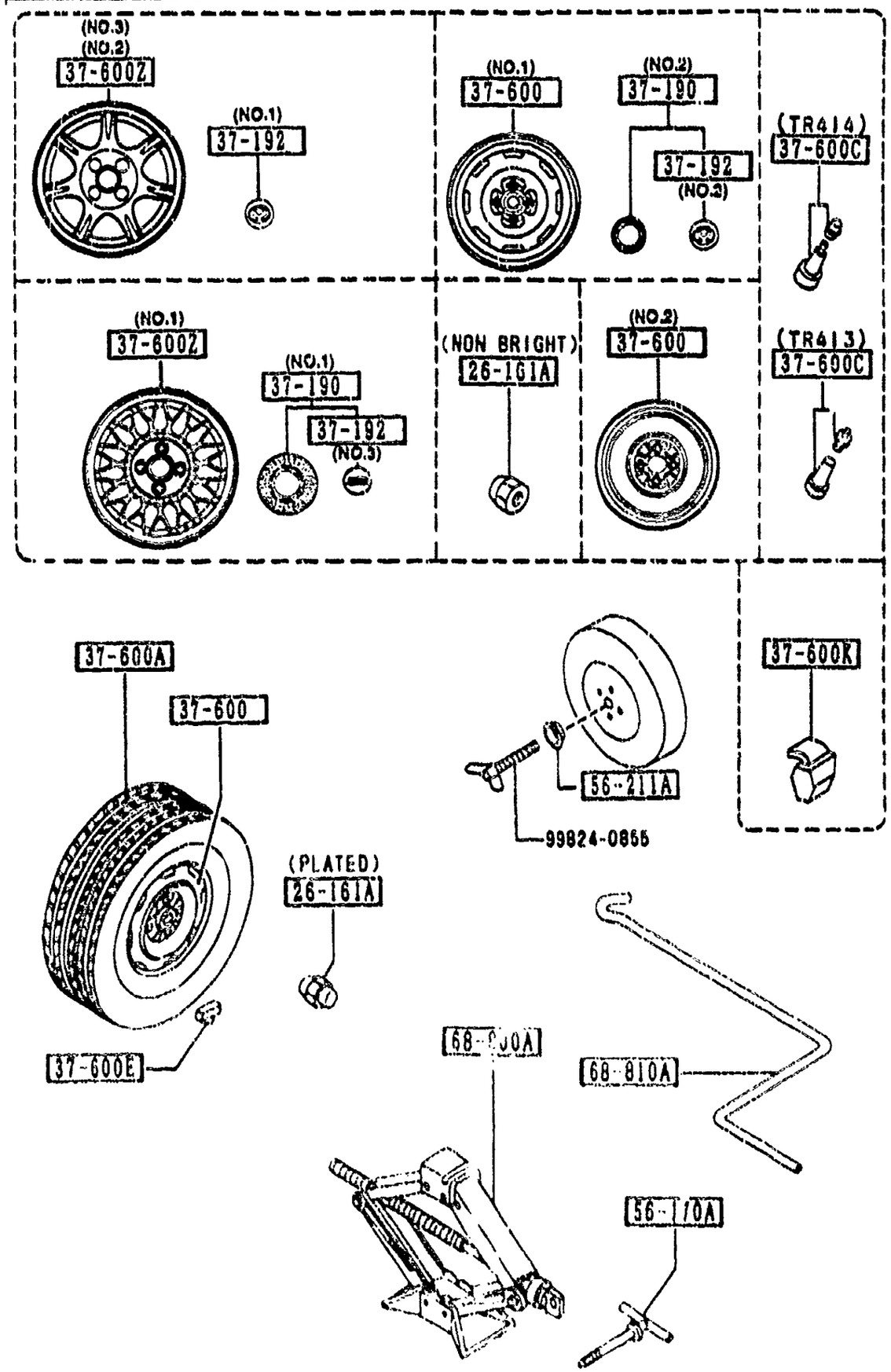

PART NO.	QTY	MODEL/RESTRICTION	MODEL/RESTRICTION	MODEL/RESTRICTION	FROM-TO
26-161A		NUT,HUB			
0603-26-161	16	NON BRIGHT			
B002-37-160	16	PLATED			
37-190		CAP,CENTER			
M011-37-190	4	(ILLUST. NO.1)			
NA53-37-190	4	(ILLUST. NO.2)			
37-192		EMBLEM,CAP-WHEEL			
EA02-37-192	4	(ILLUST. NO.1)			
GA7C-37-192	4	(ILLUST. NO.2)			
M011-37-192	4	(ILLUST. NO.3)			
37-600		WHEEL,DISC-STEEL			
99658-95540	4	5.5JJX14 P=100/O=45 (ILLUST. NO.1)			
99651-84040	1	4TX14 P=100/O=45 (ILLUST. NO.2)			
37-600A		TIRE			
90620-47614	1	T155/70D14			
90623-06684	4	P185/60R14 DUNLOP			
90624-26684	4	P185/60R14 BS			
90625-56684	4	P185/60R14 YOKOHAMA			
37-600C		VALVE,AIR			
99636-04130	1	TR413			
99636-04140	4	TR414			
37-600E		WEIGHT,DISC WHEEL-STEEL			
99655-30005	4	50			
99655-30010	4	100			
99655-30015	4	150			

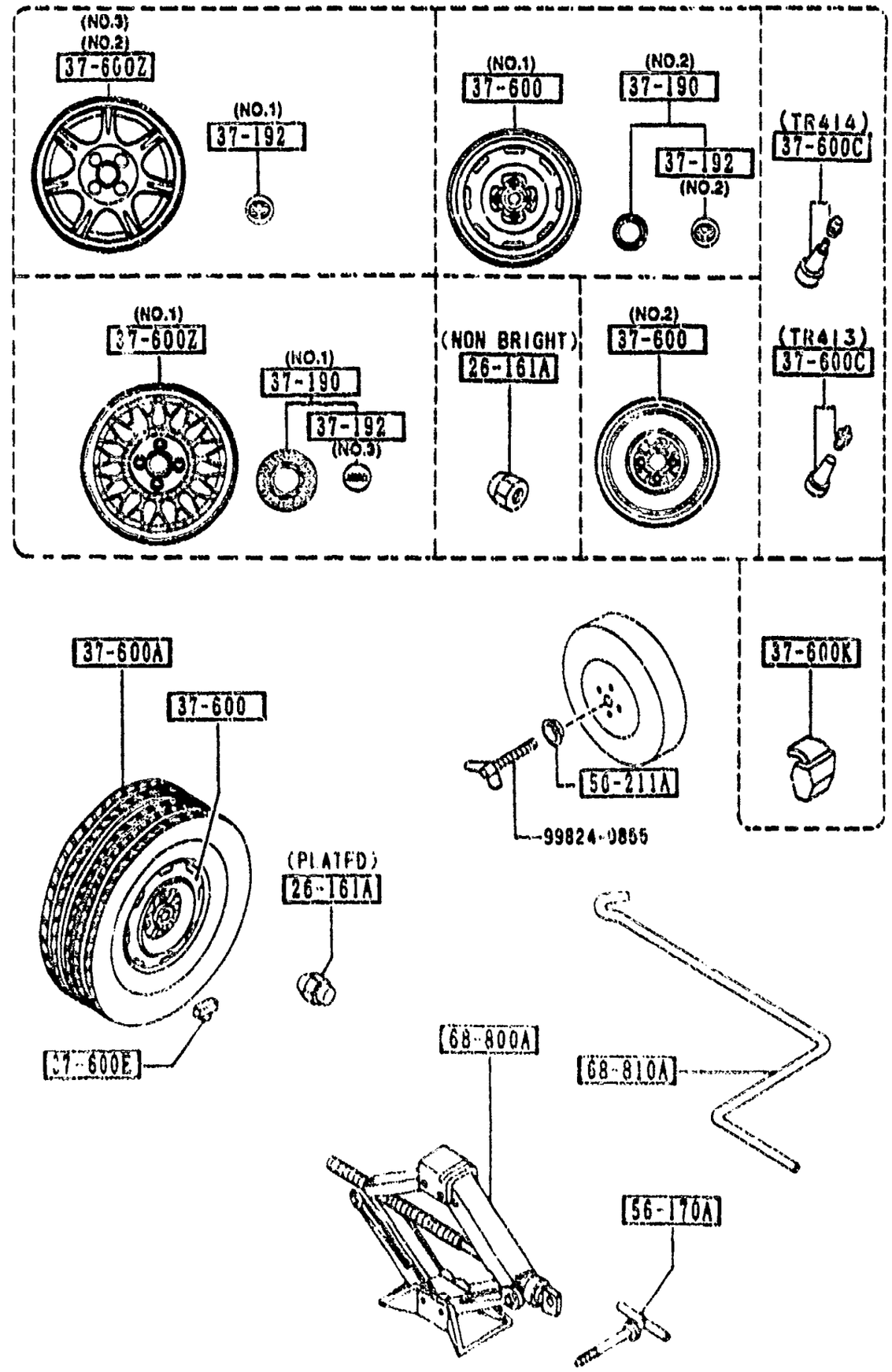

PART NO.	QTY	MODEL/RESTRICTION	MODEL/RESTRICTION	MODEL/RESTRICTION	FROM-TO
CONT'D					
99655-30020	4	20G			
99655-30025	4	25G			
99655-30030	4	30G			
99655-30035	4	35G			
99655-30040	4	40G			
99655-30045	4	45G			
99655-30050	4	50G			
99655-30055	4	55G			
99655-30060	4	60G			
37-600K		WEIGHT,DISC WHEEL-ALUMI			
99655-90005	4	5G FOR 1-PIECE WHL			
99655-90010	4	10G FOR 1-PIECE WHL			
99655-90015	4	15G FOR 1-PIECE WHL			
99655-90020	4	20G FOR 1-PIECE WHL			
99655-90025	4	25G FOR 1-PIECE WHL			
99655-90030	4	30G FOR 1-PIECE WHL			
99655-90035	4	35G FOR 1-PIECE WHL			
99655-90040	4	40G FOR 1-PIECE WHL			
99655-90045	4	45G FOR 1-PIECE WHL			
99655-90050	4	50G FOR 1-PIECE WHL			
99655-90055	4	55G FOR 1 PIECE WHL			
99655-90060	4	60G FOR 1-PIECE WHL			

3700 TIRES & JACK

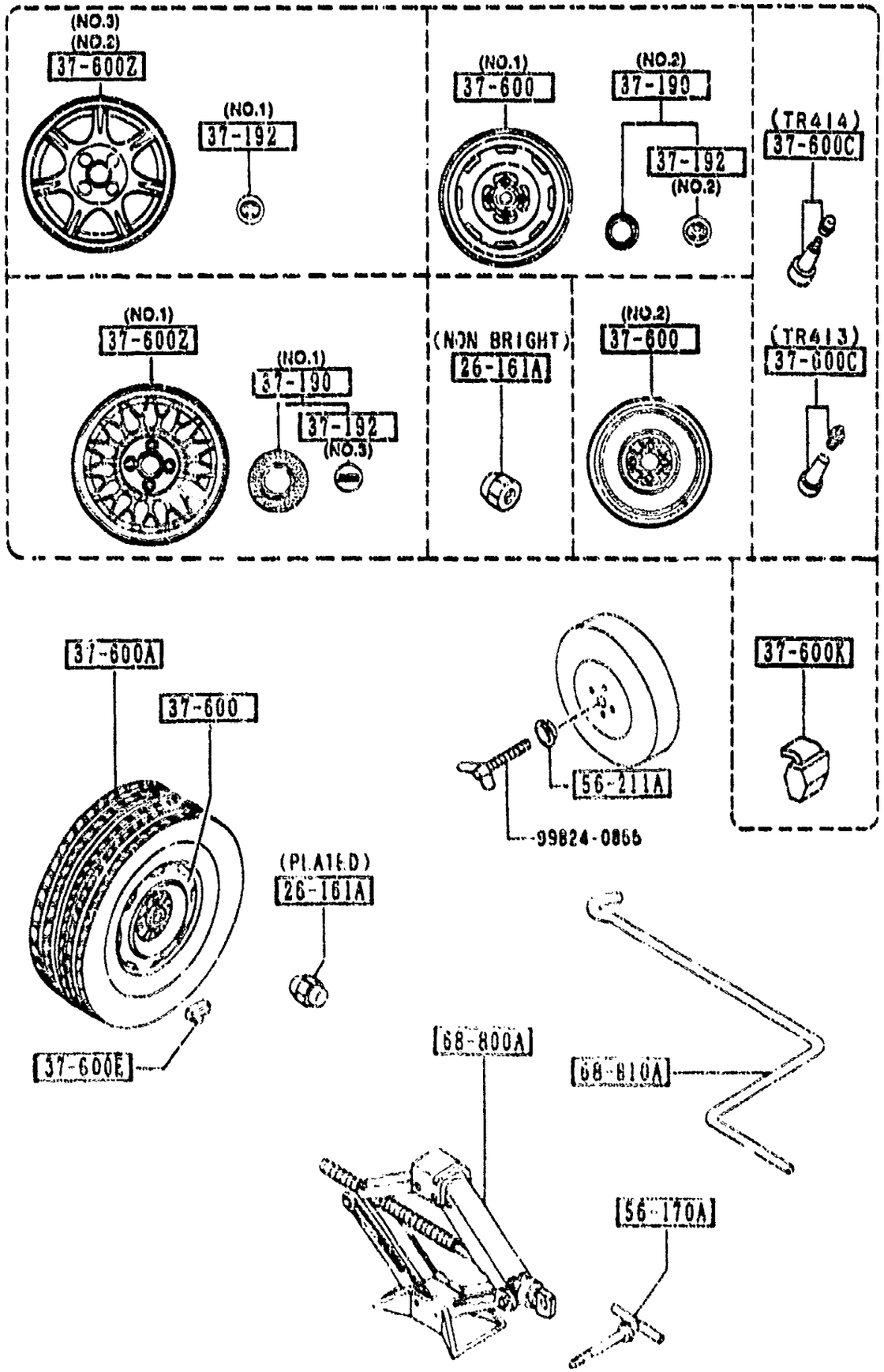

PART NO	QTY	MODEL/RESTRICTION	MODEL/RESTRICTION	MODEL/RESTRICTION	FROM TO
37-600Z		WHEEL,DISC-ALUMI.			
99650-96040	4	6JJX14 P=100/O=45BBS (ILLUST. NO.1)			
99651-36040	4	6JJX14 SILVER (ILLUST. NO.2)			
99651-96040	4	6JJX14 BRIGHT (ILLUST. NO.3)			
56-170A		BOLT,JACK SET			
B001-56-170C	1				
56-211A		PLATE,CLAMP-JACK			
1219-56-211	1				
68-800A		JACK			
B455-37-790A	1				
68-810A		HANDLE,JACK			
GJ21-37-810	1				

3900 ENGINE & T/MISSION MOUNTINGS

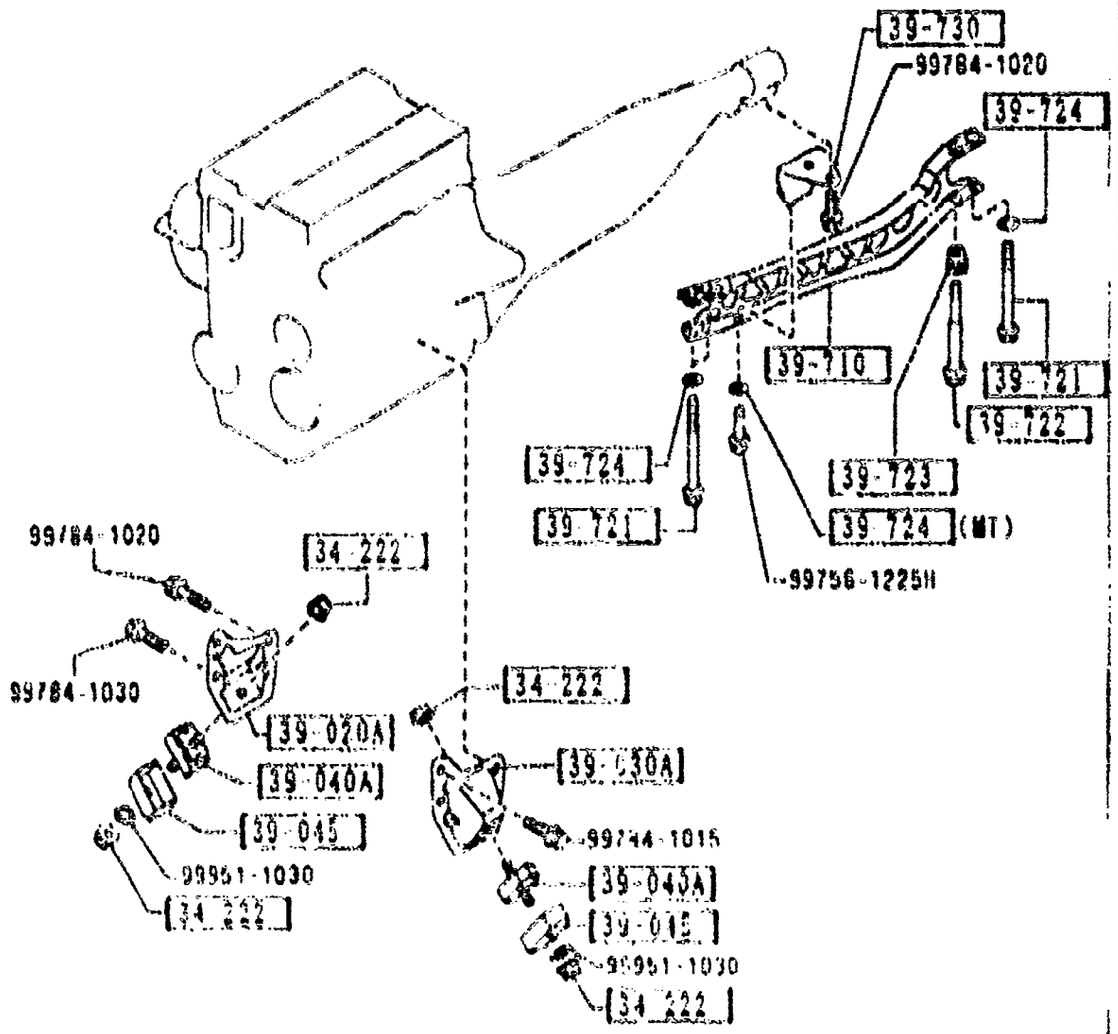

PART NO.	QTY	MODEL/RESTRICTION	MODEL/RESTRICTION	MODEL/RESTRICTION	3900-TO
34-222		NUT			
8071-34-222	4				
39-020A		BRACKET(R),ENGINE			
NA75-39-021	1				
39-030A		BRACKET(L),ENGINE			
NA75-39-030	1				
39-040A		RUBBER,ENGINE MT.			
NA01-39-040A	2				
39-045		CASING,STOPPER			
NA01-39-041	2	(MT)			-3802
A (NA01-39-041A)					
5231-39-041	2	(AT)			-3802
A (5231-39-041A)					
NA01-39-041A	2	(MT)			3802-
5231-39-041A	2	(AT)			3802-
39-710		FRAME,POWER PLANT			
NA75-39-710A	1	(MT)			
NA01-39-710A	1	(AT)			
39-721		BOLT,PLANT FRAME			
NA01-39-721	3				
39-722		BOLT,PLANT FRAME			
NA01-39-722	1				
39-723		SPACER,PLANT FRAME			
NA01-39-723	1				
39-724		WASHER,PLAIN-FRAME			
NA01-39-724	3	(AT)			
NA01-39-724	4	(MT)			
39-730		BRACKET,PLANT FRAME			
NA01-39-730A	1	(MT)			

3802 NA3### 505896

4000 -1 M EXHAUST SYSTEM

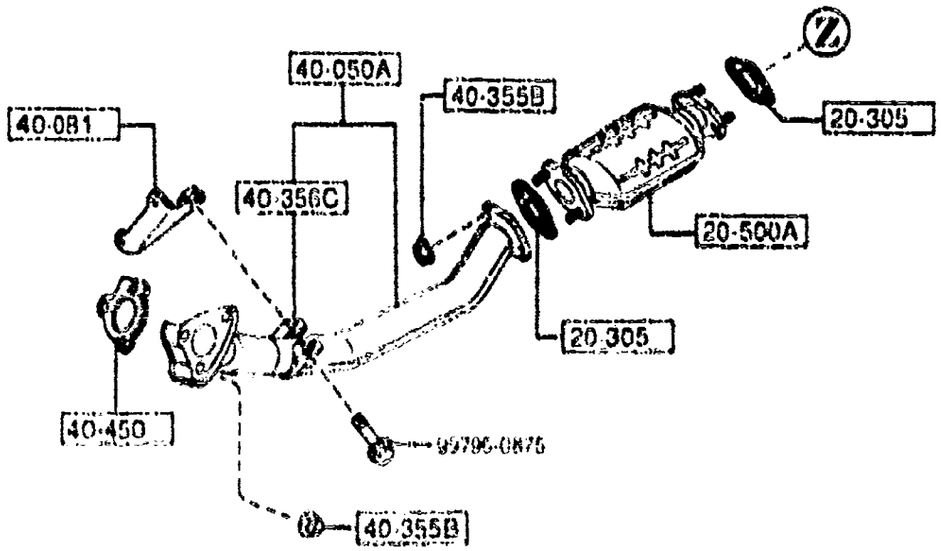

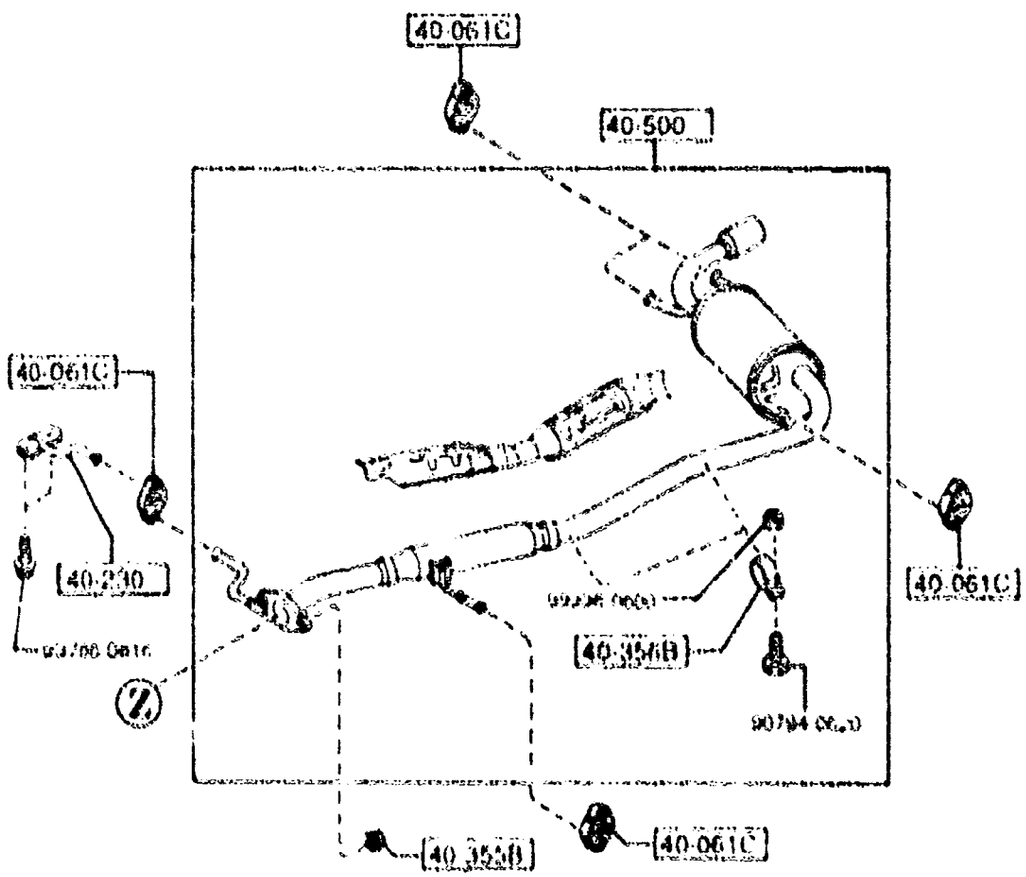

PART NO.	QTY	MODEL/RESTRICTION	MODEL/RESTRICTION	MODEL/RESTRICTION	USAGE-TO
20-305		GASKET,EXH.PIPE-CONVERTER			
B690-40-305	2	NON ASBESTOS			
20-500A		CATALYST,THREE WAY			
BPE8-20-600	1				
40-050A		PIPE,EXHAUST-FRONT			
BP56-40-500	1				
40-061C		HANGER,SILENCER			
BF03-40-061	5				
40-081		BRACKET,HANGER			
B690-40-080A	1				
40-230		BRACKET,HANGER			
B690-40-690	1				
40-355B		NUT			
JE10-40-355	7				
40-356B		BAND			
B6A5-40-356	2				
40-356C		BAND			
B690-40-356	1				
40-450		GASKET,CONVERTER			
B690-40-450	1	NON ASBESTOS			
40-500		SILENCER,MAIN			
BP55-40-100C	1	(MT)			
BP55-40-100C	1	(AT)			

4140 CLUTCH RELEASE & MASTER CYLINDERS (MANUAL TRANSMISSION)

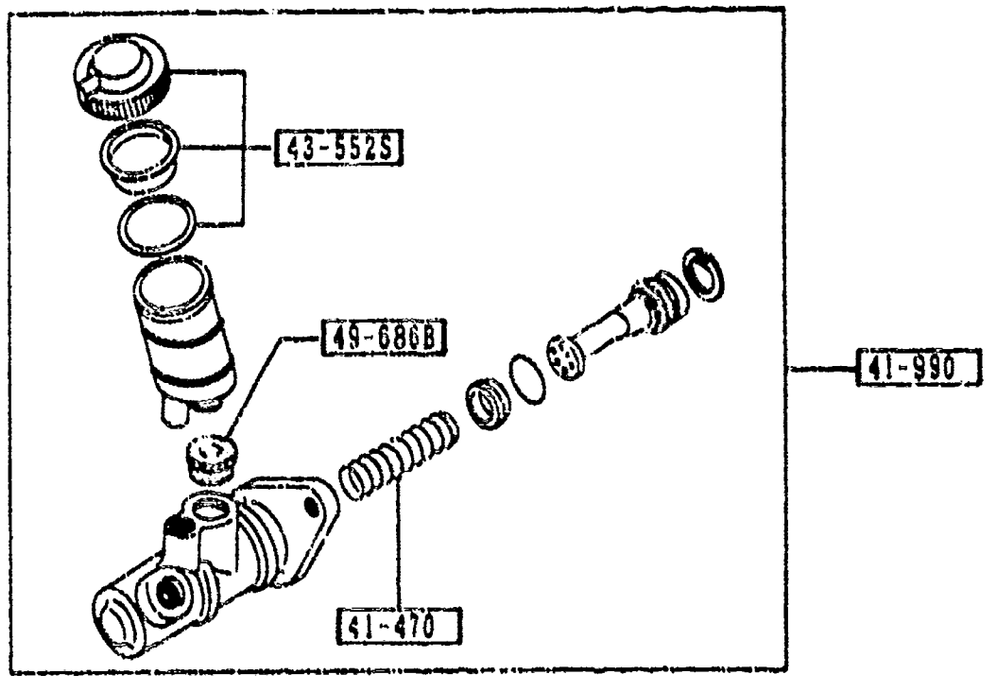

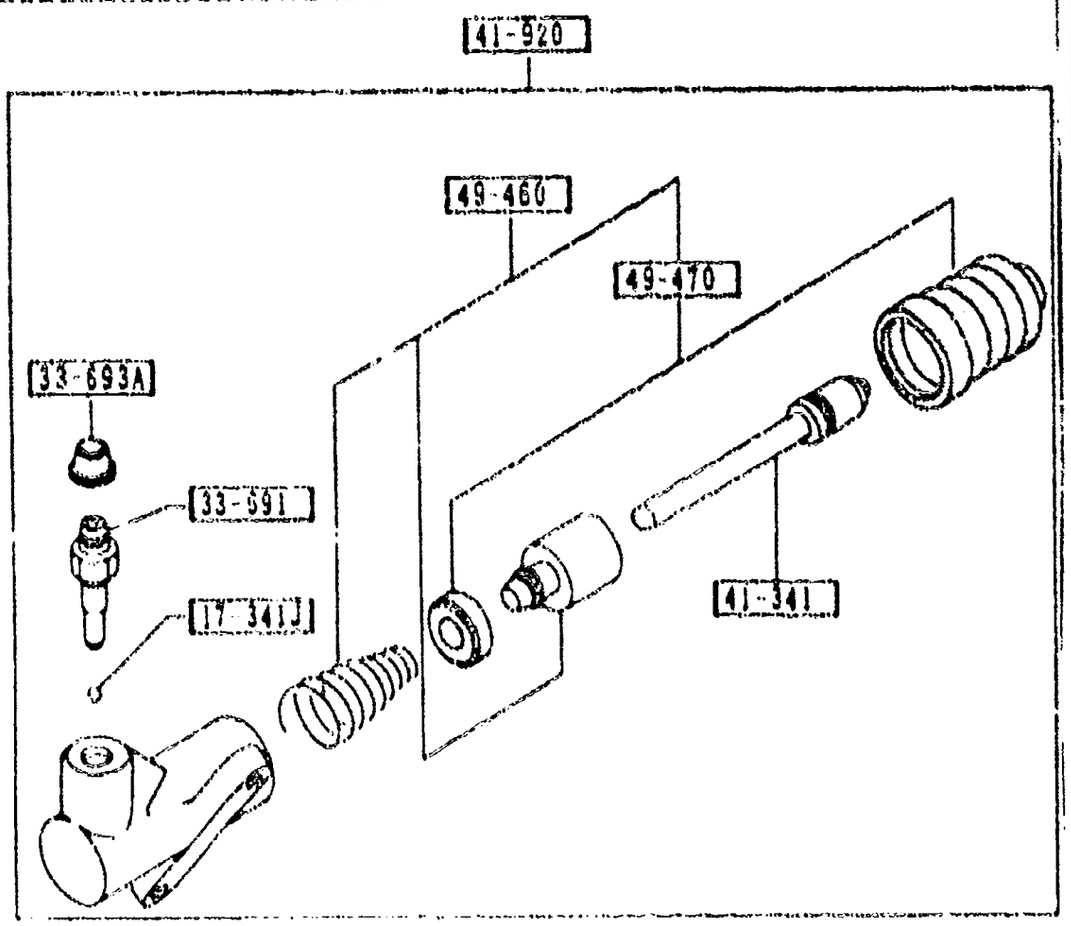

PART NO.	QTY	MODEL/RESTRICTION	MODEL/RESTRICTION	MODEL/RESTRICTION	PROVIDE
17-341J 99611-1500	1	BALL,STEEL			
33-691 0259-33-691	1	SCREW,BLEEDER			
33-693A 0259-33-693	1	CAP,BLEEDER SCREW			
41-341 H266-41-341	1	ROD,PUSH			
41-470 B312-41-470	1	SPRING			
41-920 HA01-41-920	1	CYL.,CLUTCH RELEASE			
41-990 HA01-41-400A	1	CYL.,CLUTCH MASTER			
43-552S B095-49-580	1	CAP SET,RESERVE TANK			
49-460 H005-49-460	1	PARTS KIT,INNER			
49-470 H005-49-470	1	SEAL KIT			
49-686B 0305-49-686B	1	BUSH,ELBOW JOINT			

4145 CLUTCH PIPINGS (MANUAL TRANSMISSION)

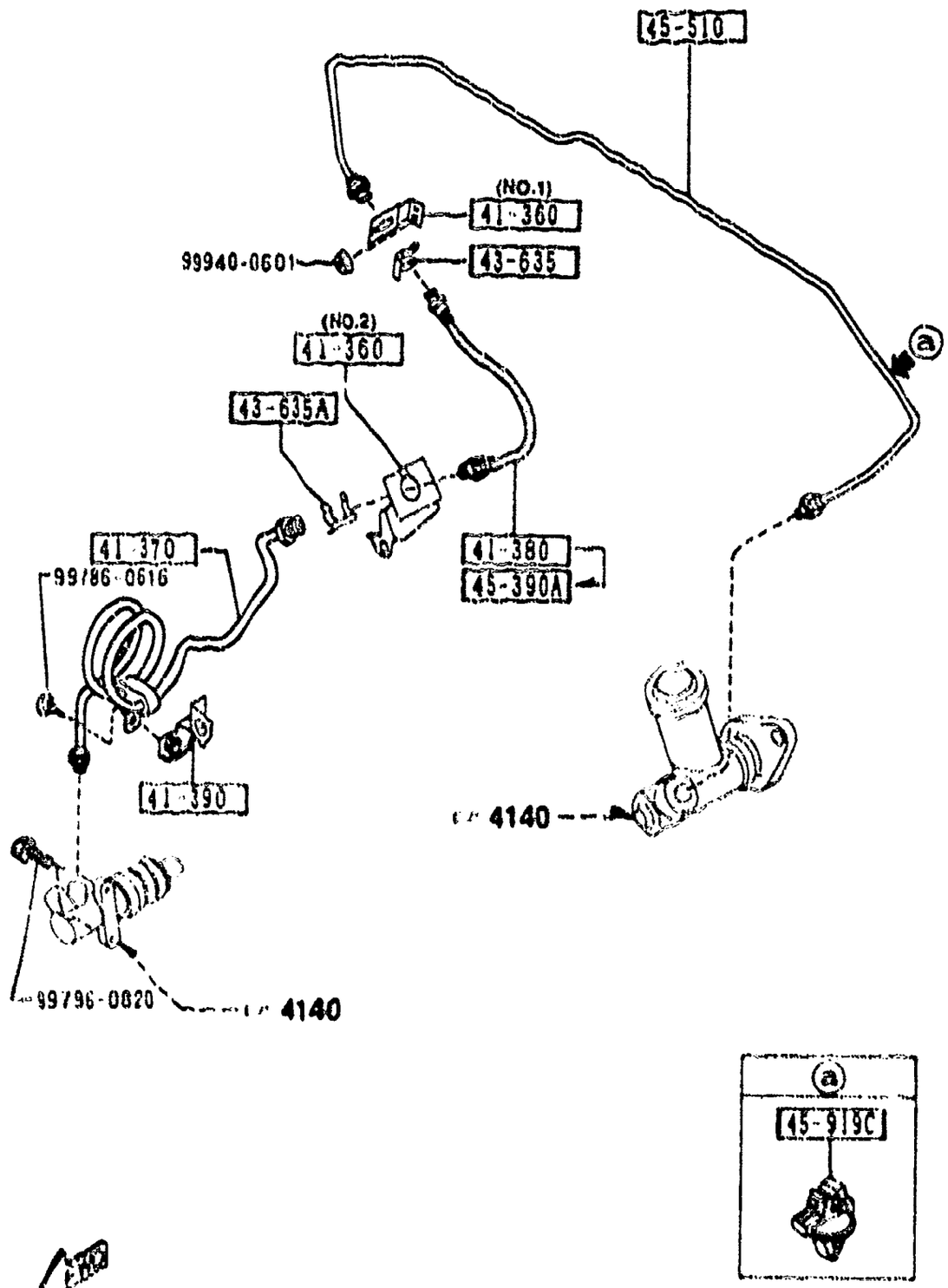

PART NO.	QTY	MODEL/RESTRICTION	MODEL/RESTRICTION	* DEL/RESTRICTION	FROM-TO
41-360		HOLDER,CLUTCH			
NA02-41-370	1	MIDORI (ILLUST. NO.1)			
NA75-41-370	1	(ILLUST. NO.2)			
41-370		PIPE,CLUTCH			
NA75-41-360	1				
41-380		HOSE,FLEXIBLE			
GK67-41-380A	1				-3A08
41-390		HOLDER,PIPE			
NA01-41-390	1				
43-635		CLIP,FLEXIBLE HOSE			
W023-43-635	1				
43-635A		CLIP,FLEXIBLE HOSE			
0136-43-635	1				
45-390A		HOSE,CLUTCH FLEXIBLE			
HE01-45-540	1				3A08-
45-510		PIPE,CLUTCH			
NA01-45-510C	1	(W/O A.LOCK BRAKE)			
NA20-45-510D	1	(A.LOCK BRAKE)			
45-919C		CLIP,PIPE			
G030-45-919 A (G030-45-919A)	1				-4404
G030-45-919A	1				4404-

3A08 NA3###-505325
4404 NA3###-517831

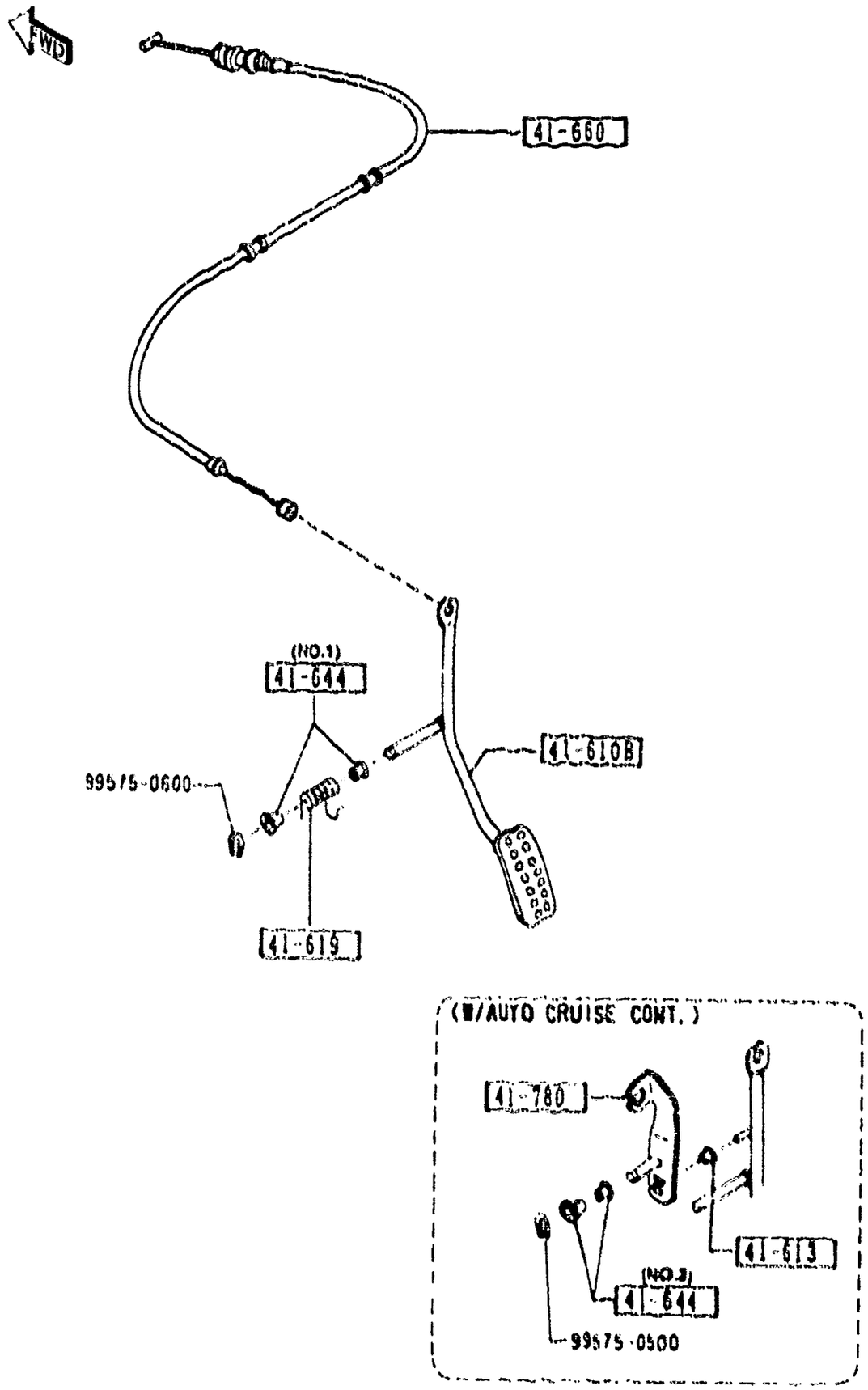

PART NO.	QTY	MODEL/RESTRICTION	MODEL/RESTRICTION	MODEL/RESTRICTION	FROM-TO
41-610B		PEDAL & ARM			
NA01-41-610A	1	BASE, PKG-A, PKG-R, (W/O AUTO CRUISE.CONT.)			
NA02-41-610A	1	PKG-B, PKG-C, (W/AUTO CRUISE.CONT.)			
41-613		ROLLER			
B104-41-114	1	PKG-B, PKG-C, (W/AUTO CRUISE.CONT.)			
41-619		SPRING,RETURN			
NA01-41-619	1				
41-644		BUSH			
B092-41-644	2	OIRES KOGYO (ILLUST. NO.1)			
0259-41-644	2	ONDO KOSAKUSHO PKG-B, PKG-C, (ILLUST. NO.2) (W/AUTO CRUISE.CONT.)			
41-660		CABLE,ACCEL.			
NA75-41-660B	1				
41-780		LEVER,ACCELERATOR			
NA01-41-230A	1	PKG-B, PKG-C, (W/AUTO CRUISE.CONT.)			

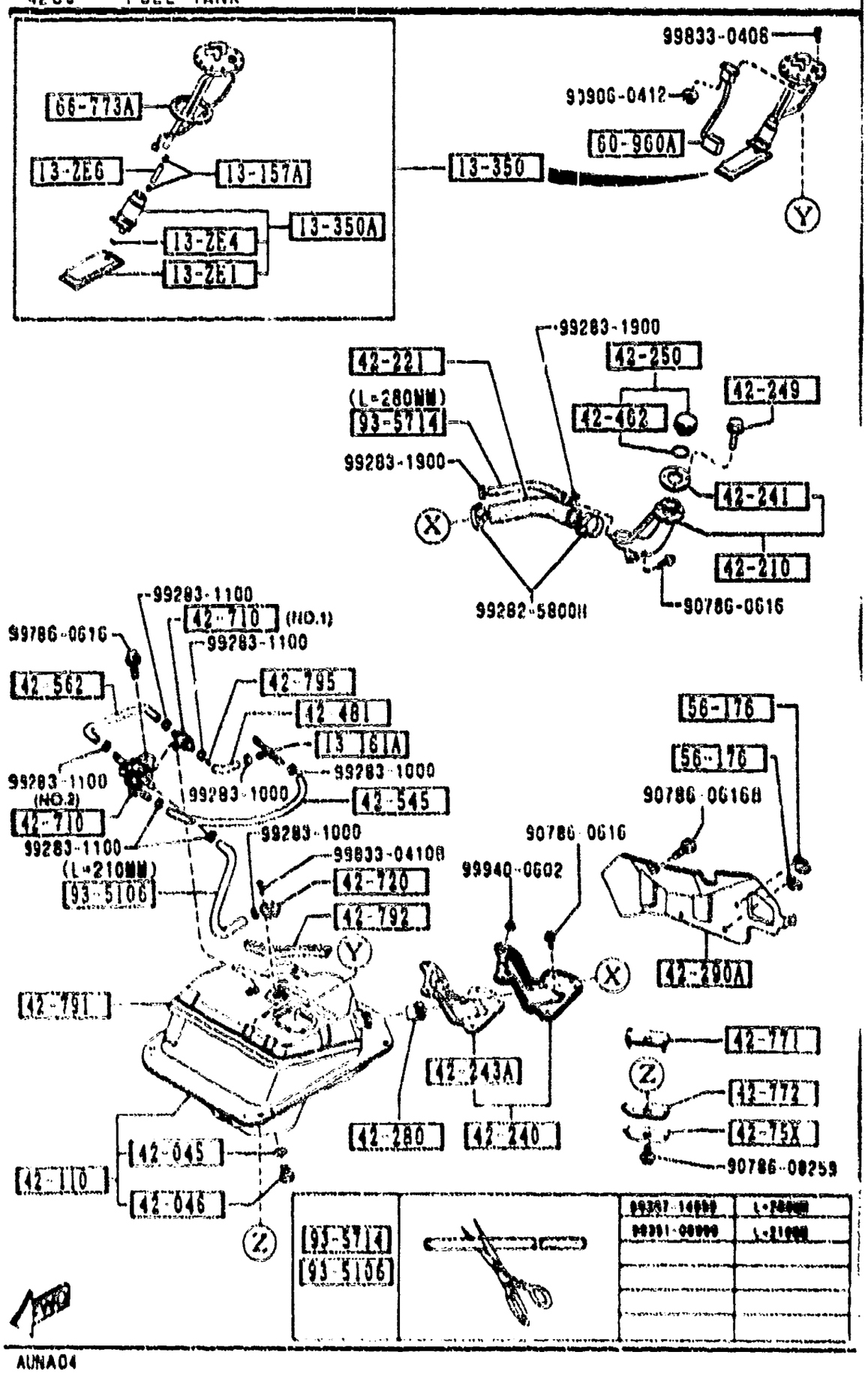

PART NO.	QTY	MODEL/RESTRICTION	MODEL/RESTRICTION	MODEL/RESTRICTION	FROM-TO
13-2E1		FILTER,FUEL PUMP			
B61P-13-2E1	1				
13-2E4		WASHER,LOCK-PUMP FIL TER NIPPONDENSO (JAPAN)			
FEH2-13-2E4	1				
13-2E6		HOSE,FUEL PUMP-IN TA NK			
KL19-13-2E6	1				
13-157A		CLIP			
AZ28-13-157	2				
13-161A		JOINT'T'			
E580-13-161	1				
13-350		PUMP,FUEL			
BPE8-13-35Z	1				
13-350A		PUMP,FUEL-SUB			
BPE8-13-350	1				
42-045		GASKET,DRAIN PLUG			
0866-42-046	1				
42-046		PLUG,DRAIN			
B596-42-045	1				
42-110		TANK,FUEL			
HA75-42-110	1				
42-210		PIPE,FILLER			
HA01-42-210A	1				
42-221		HOSE,FILLER			
HA01-42-241C	1				
42-240		COVER,DUST			
HA75-42-240	1				
42-241		GASKET,FILLER PIPE			

4200 FUEL TANK

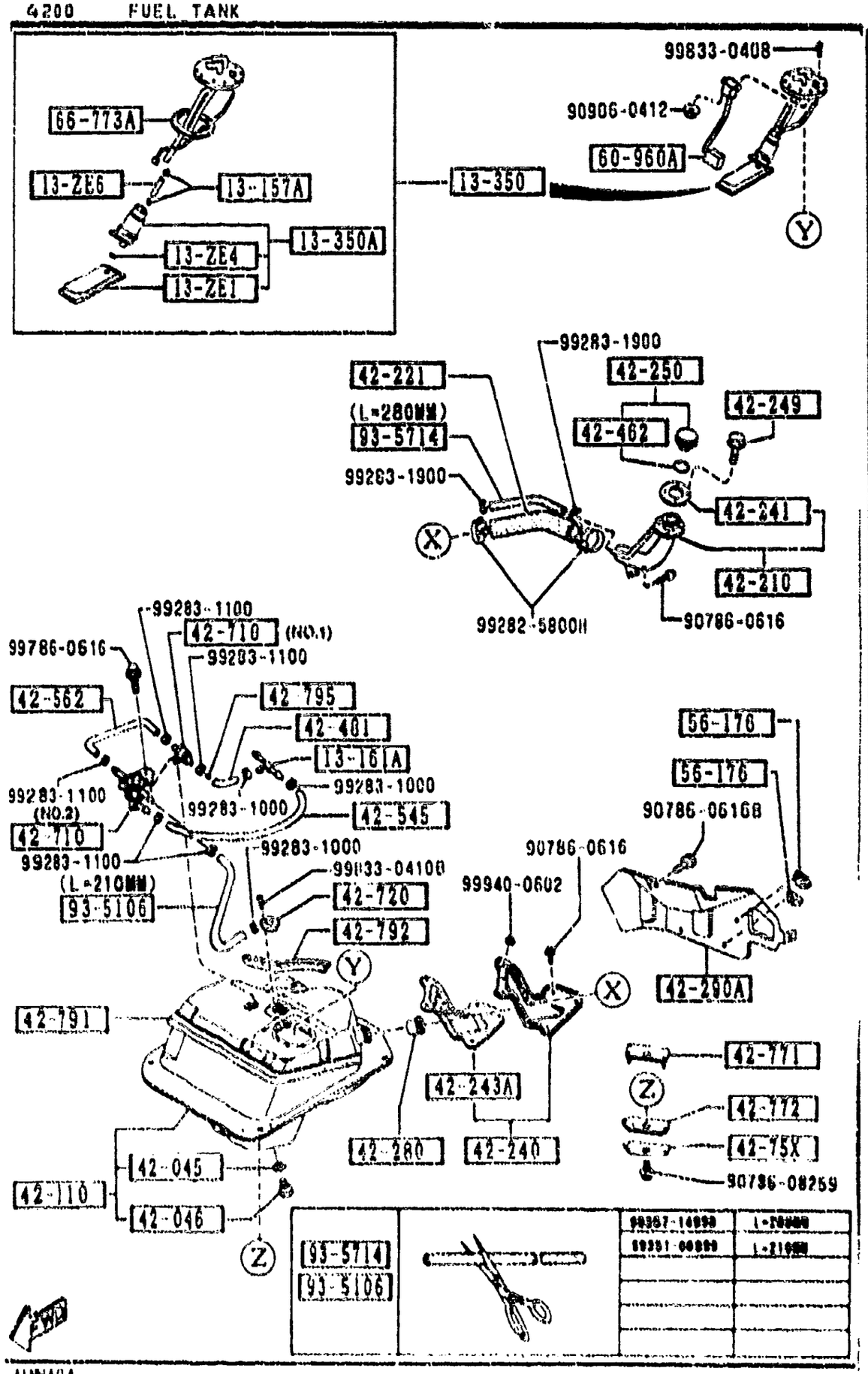

PART NO.	QTY	MODEL/RESTRICTION	MODEL/RESTRICTION	MODEL/RESTRICTION	FROM-TO
CONT'D					
0866-42-366B	1				
42-243A		GASKET'A',DUST COVER			
NA01-42-233	1				
42-249		BOLT,FILLER PIPE			
NA01-42-249B	4				
42-250		CAP,FILLER			
NA02-42-250	1				
42-280		VALVE,NON RETURN			
H260-42-270	1				
42-290A		PROTECTOR'A',FILLER PIPE			
NA01-42-291B	1				
42-462		GASKET,CAP			
BF67-42-252	1				-4701
42-481		HOSE,FUEL			
NA75-42-561	1				
42-545		HOSE,FUEL			
NA75-42-564	1				
42-562		HOSE NO.2,BREATHER			
NA03-42-562	1				
42-710		VALVE,CHECK			
GA5R-42-910	1	(ILLUST. NO.1)			
NA75-42-910	1	(ILLUST. NO.2)			
42-720		VALVE,FUEL VAPOR			
BC1M-42-980	1				
42-75X		REINF.,FUEL TANK			
NA01-42-77X	4				
42-771		RUBBER(UP),MOUNT-TANK			
NA01-42-771	4				

4701 NA3##0-521312

4200 FUEL TANK

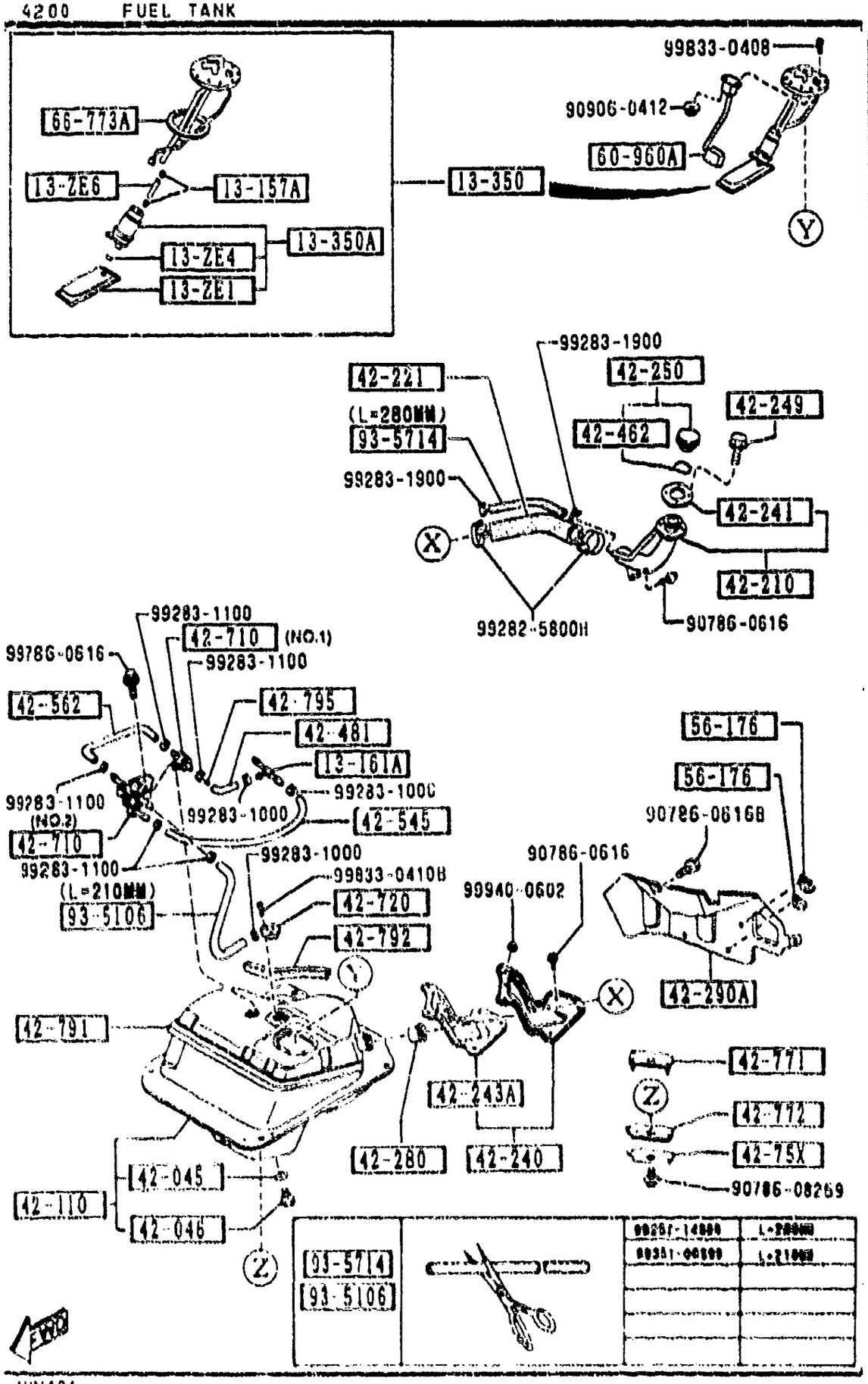

PART NO.	QTY	MODEL/RESTRICTION	MODEL/RESTRICTION	MODEL/RESTRICTION	FROM-TO
42-772 NA01-42-772	4	RUBBER(LWR),MOUNT-TANK			
42-791 NA01-42-761	1	PAD,FUEL TANK			
42-792 NA01-42-762	1	PAD,FUEL TANK			
42-795 GN51-42-795	1	INSERT			
56-176 G030-56-176	3	HOLDER,JACK HANDLE			
60-960A NA75-60-960A	1	GAUGE,FUEL TANK			
66-773A J004-60-962	1	GASKET			
93-5106 99351-06999	1	HOSE			
93-5714 99357-14999	1	HOSE			

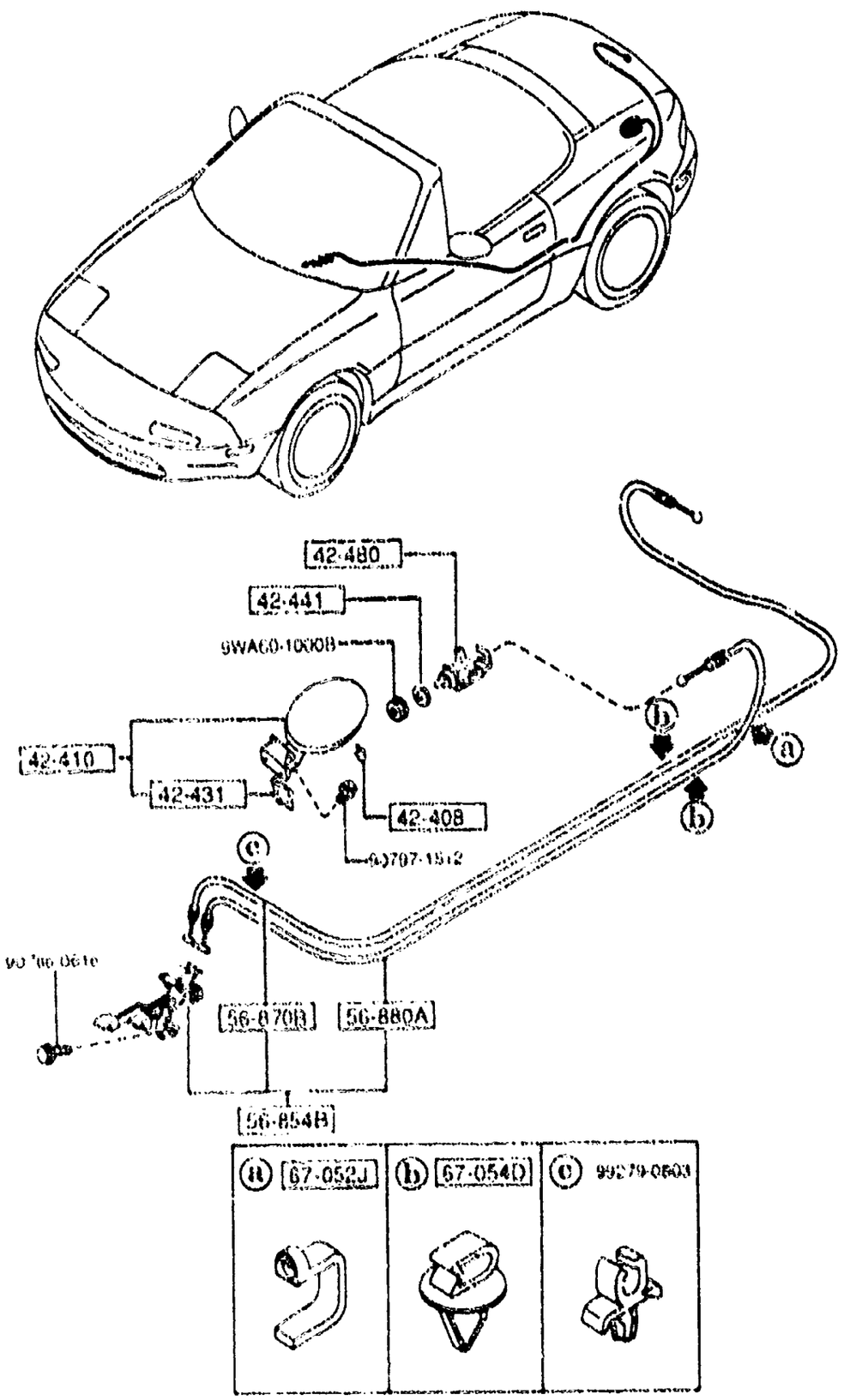

PART NO.	QTY	MODEL/RESTRICTION	MODEL/RESTRICTION	MODEL/RESTRICTION	FROM-TO
42-408		STOPPER,FILLER LID			
0187-70-491	2				
42-410		LID,FUEL FILLER			
NA01-42-410A	1				-4701
AN(NA01-42-410B)					
*NA01-42-410B	1				4701-
42-431		SPRING LIFT,LID			
H043-42-431D	1				
42-441		WASHER,LID OPENER			
NA01-56-896	1				
42-480		OPENER,FILLER LID			
B095-56-890A	1				
56-854B		OPENER,T/LID & F/LID			
N007-56-850A	1				
56-870B		CABLE,T/LID OPENER			
N007-56-880A	1				
56-880A		CABLE,F/LID OPENER			
NA01-56-890A	1				
67-052J		CLIP			
P001-67-051	1				
67-054D		CLIP			
H260-67-054	2				

4701 NAS***-521512

4300 -1 CLUTCH & BRAKE PEDALS (MANUAL TRANSMISSION)

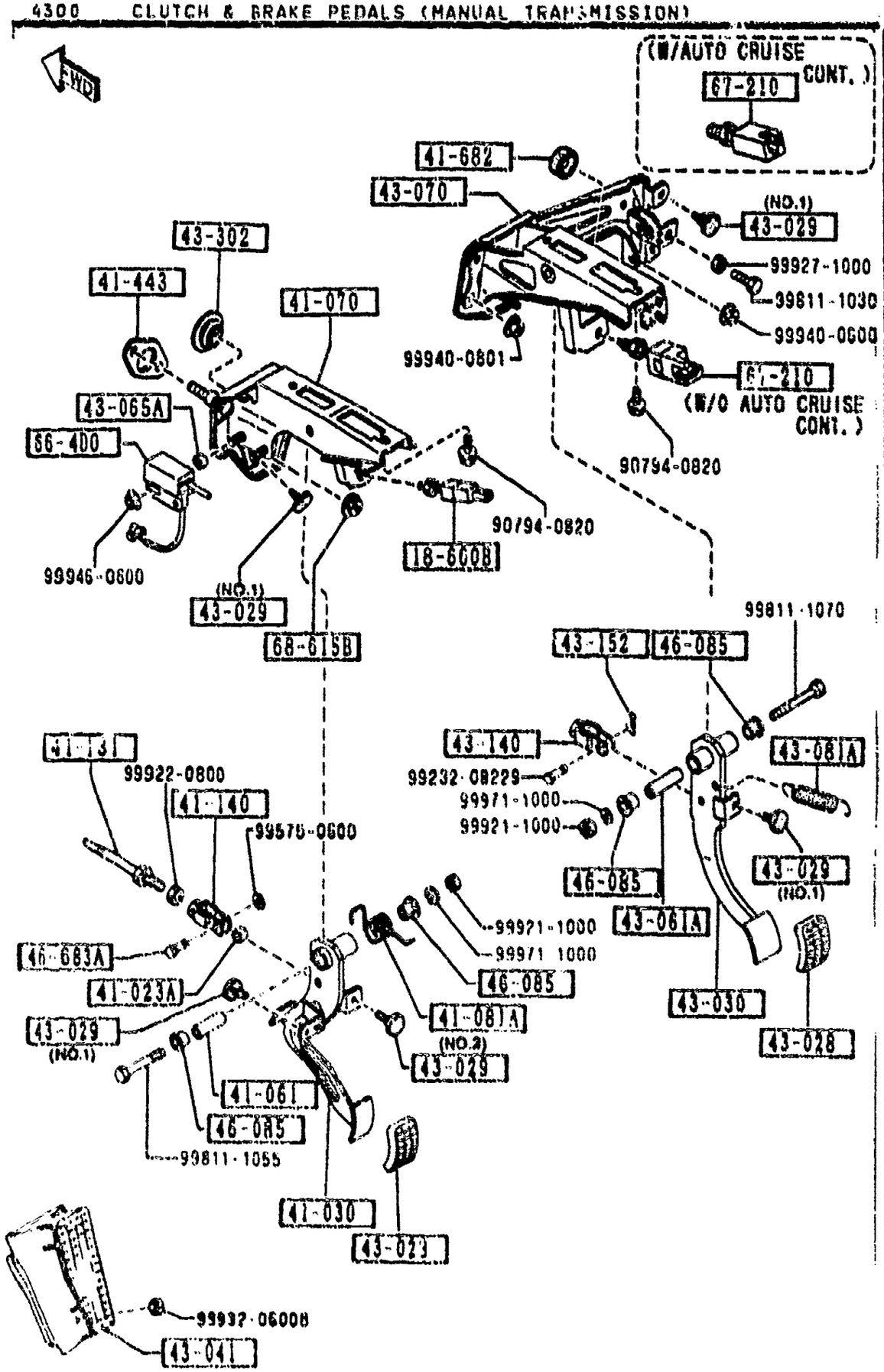

PART NO.	QTY	MODEL/RESTRICTION	MODEL/RESTRICTION	MODEL/RESTRICTION	FROM-TO
18-660B LA01-66-490A	1	SWITCH,CLUTCH			
41-023A 0727-41-023	1	BUSH			
41-030 NA01-41-030C	1	PEDAL,CLUTCH			
41-061 0727-41-061	1	SPACER			
41-070 NA01-41-070B	1	BRACKET,MASTER CYL.			
41-081A BR70-41-081	1	SPRING,RETURN			
41-131 0824-41-131	1	ROD,PUSH			
41-140 NA01-41-140B	1	FORK,CLUTCH			
41-443 NA01-41-443	1	GASKET			
41-682 1456-41-682	1	RUBBER,STOP FKO-B, FKO-C, (W/AUTO CRUISE CONT.)			
43-028 8092-43-028	2	PAD,PEDAL			
43-029 8001-43-029	4	RUBBER,STOPPER KUROISHI TEKKO (ILLUST. NO.1)			
0030-43-029	1	OIRES KOGYO (ILLUST. NO.2)			
43-030		PEDAL,BRAKE			

4300 CLUTCH & BRAKE PEDALS (MANUAL TRANSMISSION)

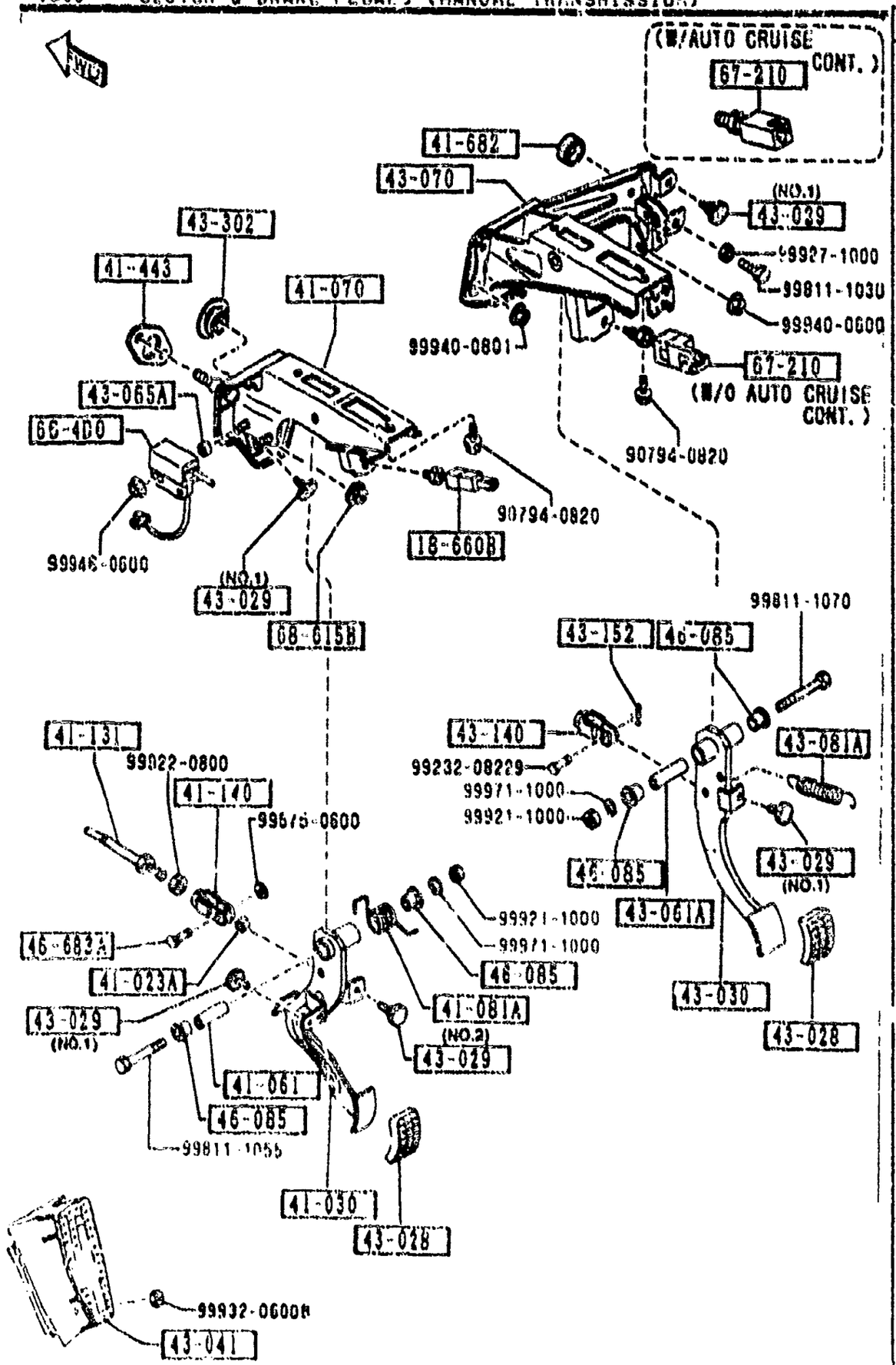

PART NO.	QTY	MODEL/RESTRICTION	MODEL/RESTRICTION	MODEL/RESTRICTION	FROM-TO
CONT'D					
NA01-43-030	1				
43-041		REST,FOOT			
NA01-43-041	1				
43-061A		PIPE,PEDAL			
0866-43-062	1				
43-065A		SPACER			
BR70-43-065	1				
43-070		BRACKET MASTER CYL.			
NA01-43-070A	1	BASE, PKG-A, PKG-B, (W/O AUTO CRUISE.CONT.)			
NA02-43-070A	1	PKG-D, PKG-C, (W/AUTO CRUISE.CONT.)			
43-081A		SPRING,RETURN-BRAKE			
B092-41-081	1				
43-140		FORK,BRAKE			
1524-43-141	1				
43-152		PIN,SNAP			
D001-43-152	1				
43-302		GROMMET,BRAKE PEDAL			
6180-43-302	1				
46-085		BUSH			
1015-46-085	4				
46-683A		PIN			
0223-46-683	1				
66-400		SWITCH,CLUTCH CUT			
FB01-66-400	1				
67-210		SWITCH,STOP-LAMP			
BN70-66-490A	1	PKG-B, PKG-C, (W/AUTO CRUISE CONT.			

4300 CLUTCH & BRAKE PEDALS (MANUAL TRANSMISSION)

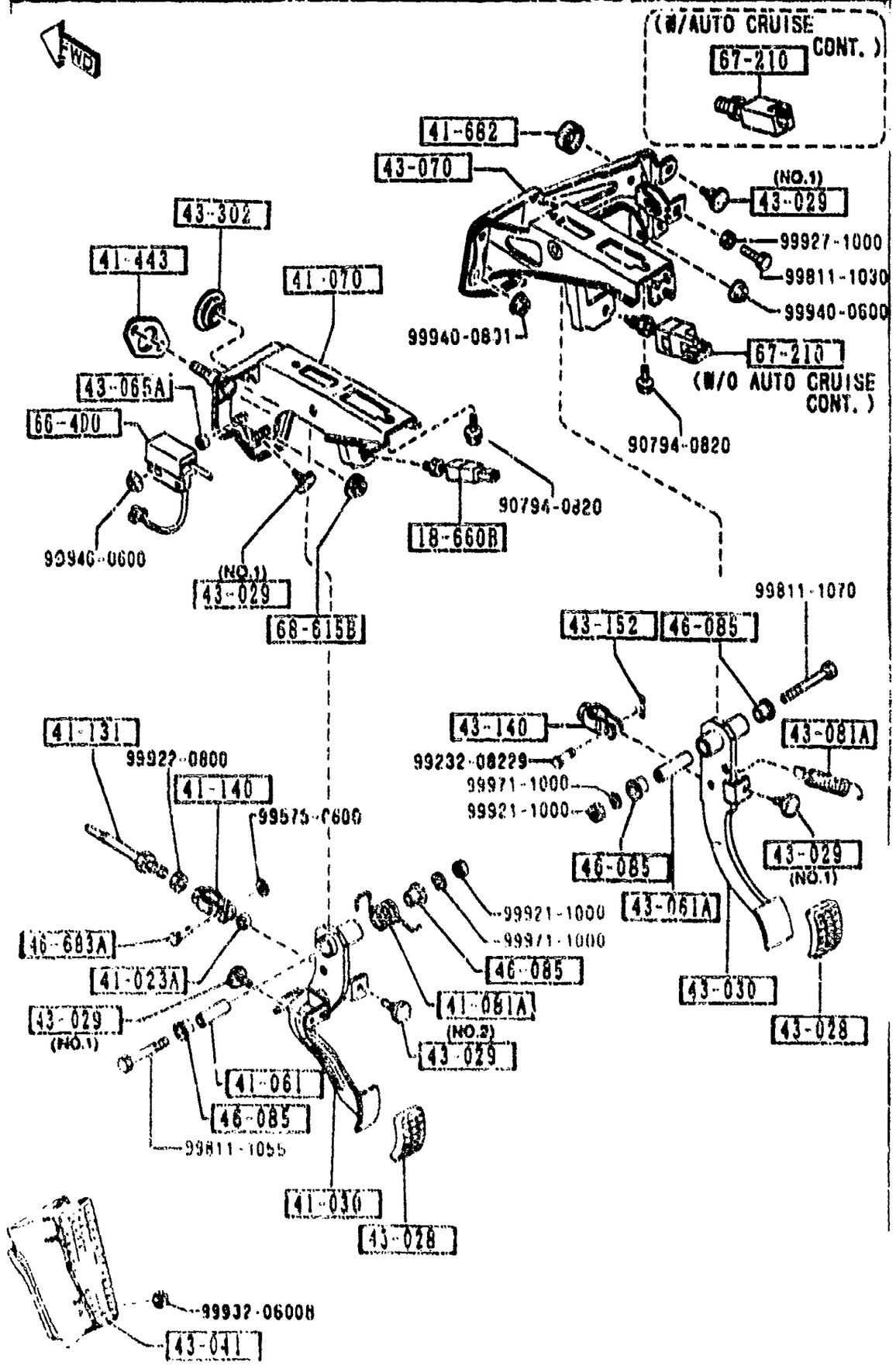

PART NO.	QTY	MODEL/RESTRICTION	MODEL/RESTRICTION	MODEL/RESTRICTION	FROM-TO
CONT'D		)			
8001-66-490A	1	BASE, PKG-A, PKG-R, (W/O AUTO CRUISE.CONT.)			
68-615B		NUT,FLANGE-CAP			
B160-60-615	)				

4300A -1 BRAKE PEDALS (AUTOMATIC TRANSMISSION)

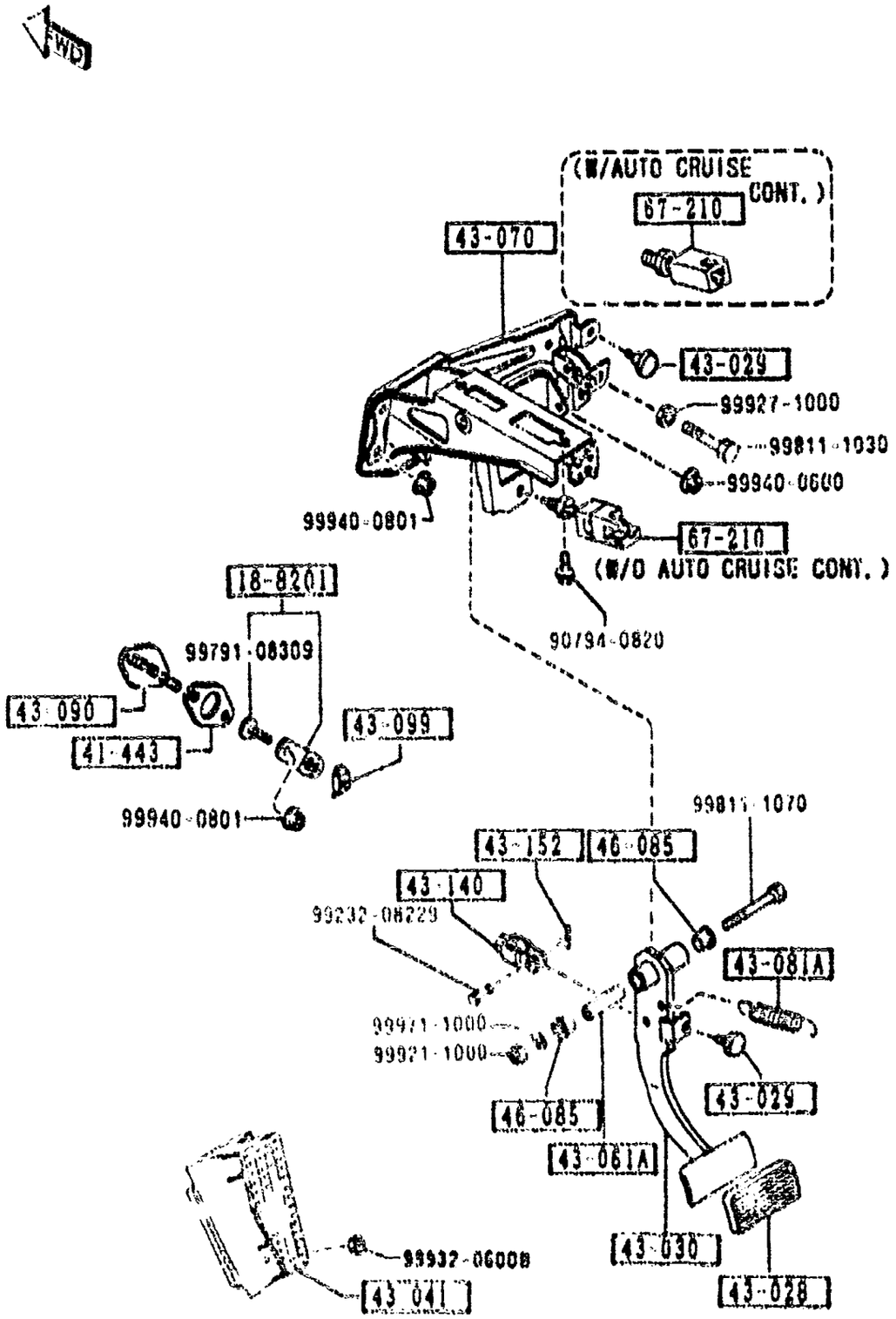

PART NO.	QTY	MODEL/RESTRICTION	MODEL/RESTRICTION	MODEL/RESTRICTION	FROM-TO
18-8201 NA75-18-945B	1	BRACKET,CONTROL UNIT			
41-443 NA01-41-443	1	GASKET			
43-028 0268-43-028	1	PAD,PEDAL			
43-029 B001-43-029	2	RUBBER,STOPPER KUROISHI TEKKO			
43-030 NA03-43-030	1	PEDAL,BRAKE			
43-041 NA01-43-041	1	REST,FOOT			
43-061A 0866-43-062	1	PIPE,PEDAL			
43-070 NA01-43-070A	1	BRACKET,MASTER CYL. BASE, PKG-A, PKG-B, (W/O AUTO CRUISE.CONT.)			
NA02-43-070A	1	PKG-D, PKG-C, (W/AUTO CRUISE.CONT.)			
43-081A 8092-41-081	1	SPRING,RETURN-BRAKE			
43-090 NA03-43-090	1	PLATE			
43-099 NF23-43-099	1	HOLDER,PLATE			
43-140 1524-43-141	1	FORK,BRAKE			

4300A -2 * BRAKE PEDALS (AUTOMATIC TRANSMISSION)

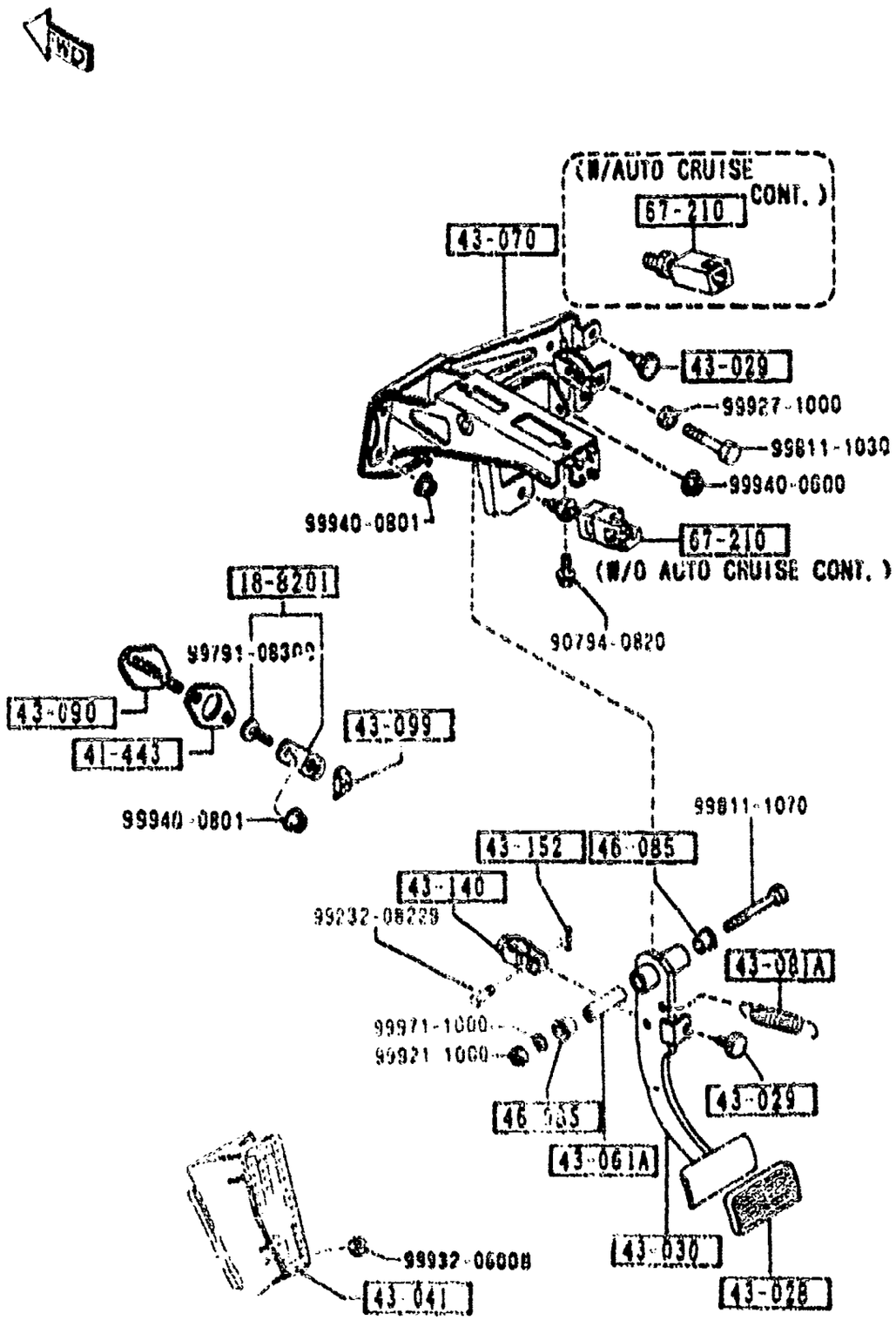

PART NO.	QTY	MODEL/RESTRICTION	MODEL/RESTRICTION	MODEL/RESTRICTION	FROM-TO
43-152		PIN,SNAP			
D001-43-152	1				
46-085		BUSH			
1015-46-085	2				
67-210		SWITCH,STOP LAMP			
BR70-66-490A	1	PKG-B, PKG-C, (W/AUTO CRUISE.CONT.)			
B001-66-490A	1	BASE, PKG-A, PKG-R, (W/O AUTO CRUISE.CONT.)			

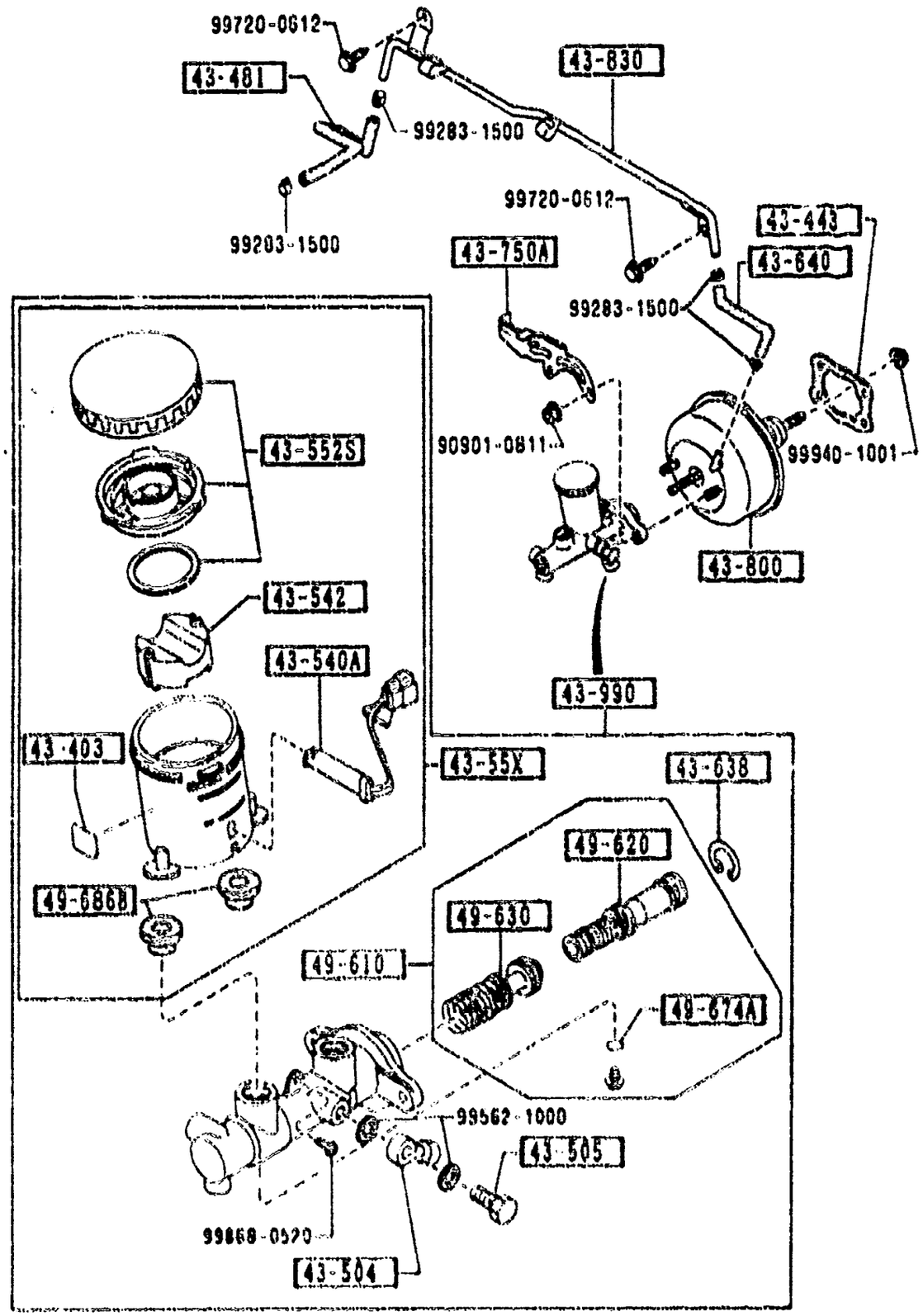

PART NO	QTY	MODEL/RESTRICTION	MODEL/RESTRICTION	MODEL/RESTRICTION	FROM-TO
43-403 TA04-43-403A	1	LABEL,ISO			
43-443 H001-43-443	1	GASKET,VAC POWER ASSIST NON ASBESTOS			
43-481 HA75-43-481	1	HOSE,VACUUM			
43-504 W023-43-504	1	JOINT,PIPE			
43-505 W023-43-505	1	BOLT,CONNECTOR			
43-540A GA97-43-540	1	SENSOR,RESERVE TANK			
43-542 3597-43-542	1	FLOAT			
43-55X B2Y6-43-55X	1	SET,TANK			
43-552S D001-49-650A	1	CAP SET,RESERVE TANK			
43-638 GA02-49-638	1	RING,RETAINING			
43-640 HA01-43-640	1	HOSE,VACUUM			
43-750A HA02-43-750A	1	HOLDER,P.B.VALVE			
43-800 HA75-43-800	1	VACUUM POWER ASSIST			
43-830		PIPE,VACUUM			

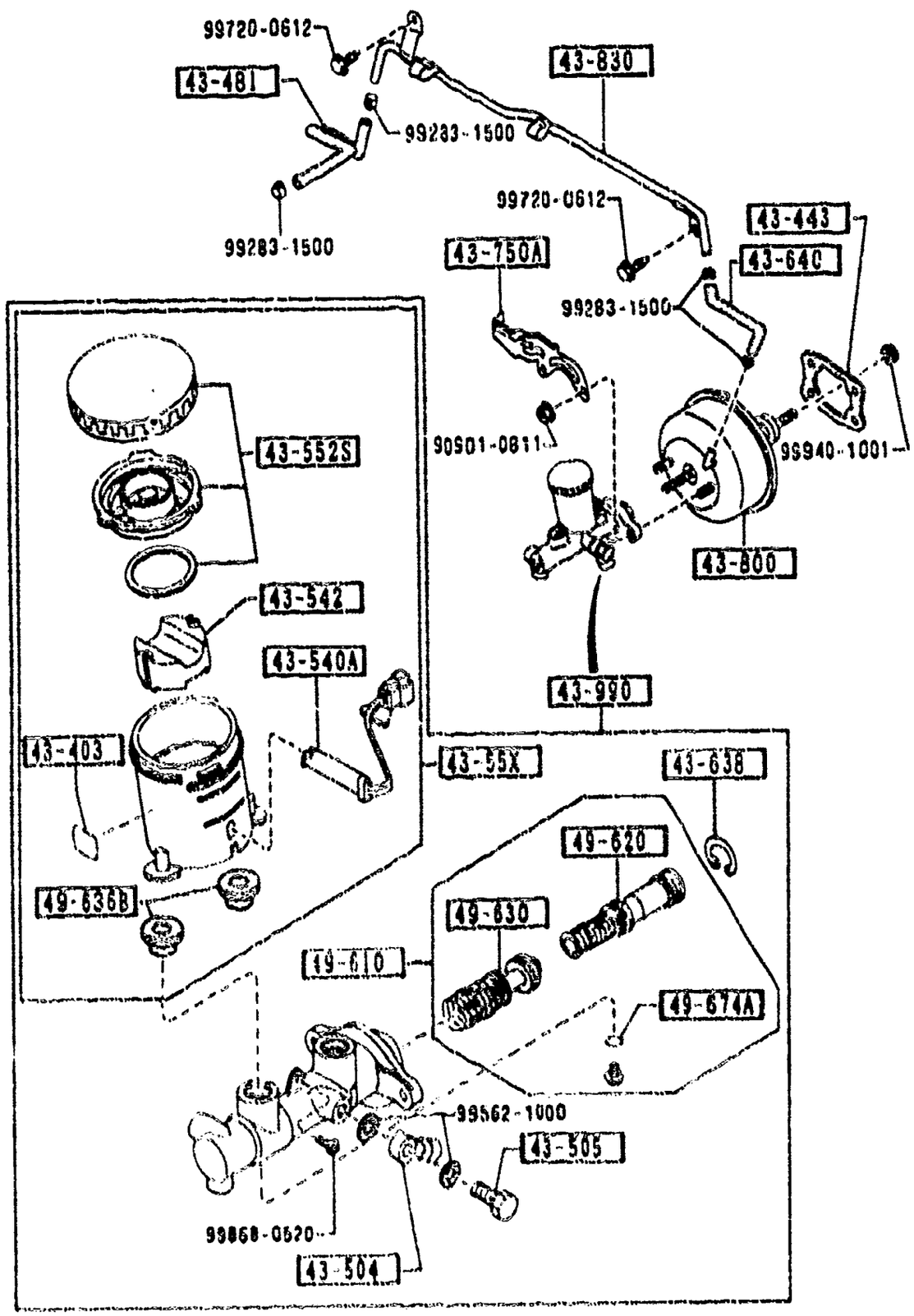

PART NO.	QTY	MODEL/RESTRICTION	MODEL/RESTRICTION	MODEL/RESTRICTION	FROM-TO
CONT'D					
NA01-43-830A	1				
43-990		CYL.,TANDEM MASTER			
NAY1-43-40Z	1				-3B01
A (NA01-43-40Z)					
NA01-43-40Z	1				3B01-
49-610		PARTS KIT,INN.-BRAKE			
BW0A-43-61Z	1				
49-620		PISTON,PRIMARY			
BW0A-43-62Z	1				
49-630		PISTON,FLOATING			
BW0A-43-63Z	1				
49-674A		RING,'O'-MASTER CYL.			
99541-00403	1				
49-686B		BUSH,ELBOW JOINT			
F100-49-686	2				

3B01 NA3***-505B07

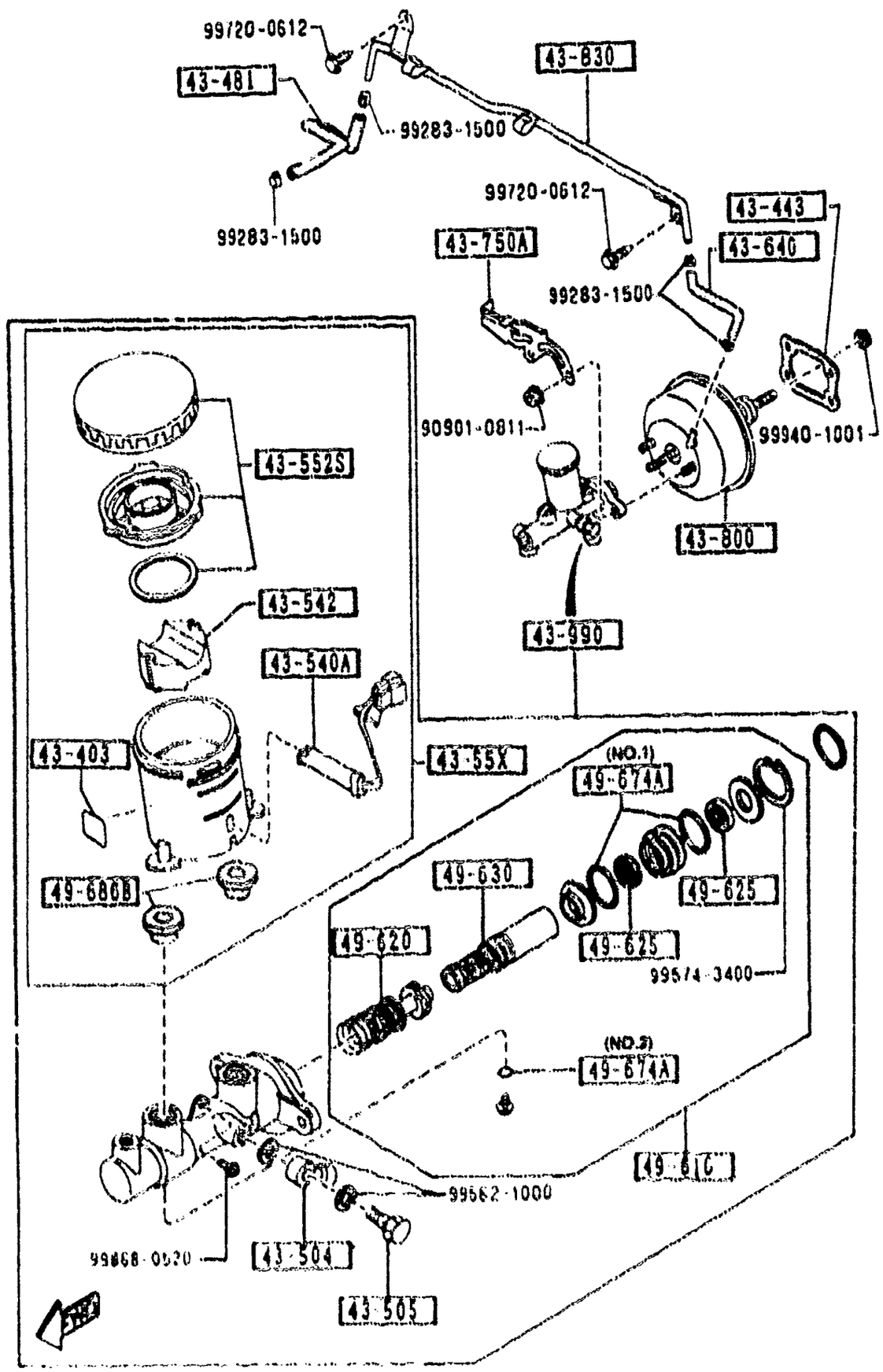

PART NO.	QTY	MODEL/RESTRICTION	MODEL/RESTRICTION	MODEL/RESTRICTION	FROM-TO
43-403 TA04-43-403A	1	LABEL,ISO			
43-443 H001-43-443	1	GASKET,VAC POWER ASSIST NON ASBESTOS			
43-481 NA75-43-481	1	HOSE,VACUUM			
43-504 W023-43-504	1	JOINT,PIPE			
43-505 W023-43-505	1	BOLT,CONNECTOR			
43-540A GA97-43-540	1	SENSOR,RESERVE TANK			
43-542 3597-43-542	1	FLOAT			
43-55X NAY3-43-55X	1	SET,TANK			
43-552S D001-49-650A	1	CAP SET,RESERVE TANK			
43-640 NA01-43-640	1	HOSE,VACUUM			
43-750A NA02-43-750A	1	HOLDER,P.B.VALVE			
43-800 HA80-43-800	1	VACUUM POWER ASSIST			
43-830 NA23-43-830B	1	PIPE,VACUUM			
43-990		CYL.,TANDEM MASTER			

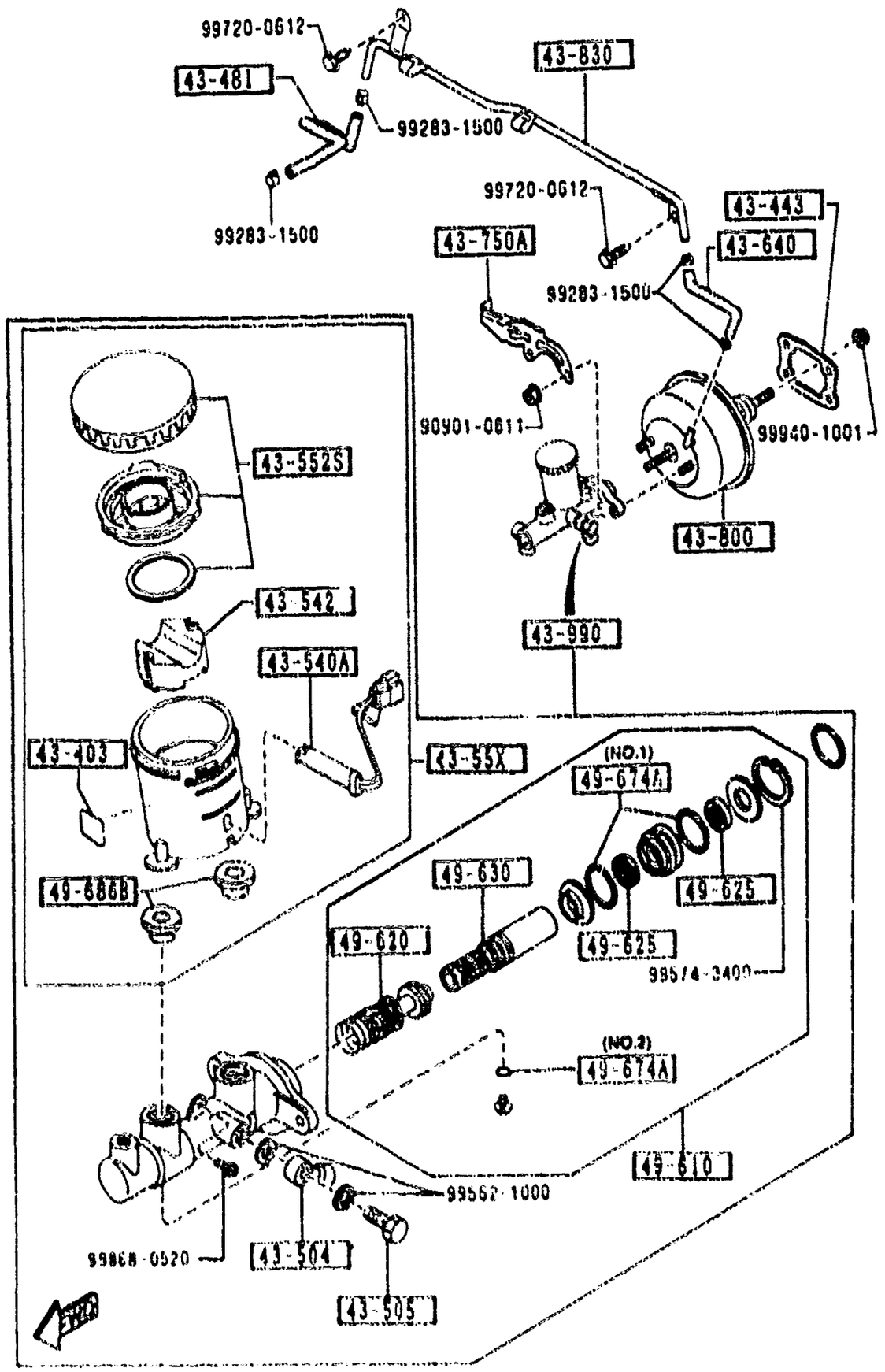

PART NO.	QTY	MODEL/RESTRICTION	MODEL/RESTRICTION	MODEL/RESTRICTION	FROM-TO
CONT'D					
NAY3-43-40ZA	1				-3B01
A (NA23-43-40Z)					
NA23-43-40Z	1				3B01-
49-610		PARTS KIT,INN.-BRAKE			
NAY3-43-41Z	1				
49-620		PISTON,PRIMARY			
B252-49-620A	1				
49-625		CUP,SECONDARY			
NA23-43-625	2				
49-630		PISTON,FLOATING			
NA23-43-63Z	1				
49-674A		RING,'O'-MASTER CYL.			
NA23-43-515	2	SHINEI KOGYO (ILLUST. NO.1)			
99541-00603	1	NOK (ILLUST. NO.2)			
49-686B		BUSH,ELBOW JOINT			
F100-49-686	2				

3B01 NA3N##-505807

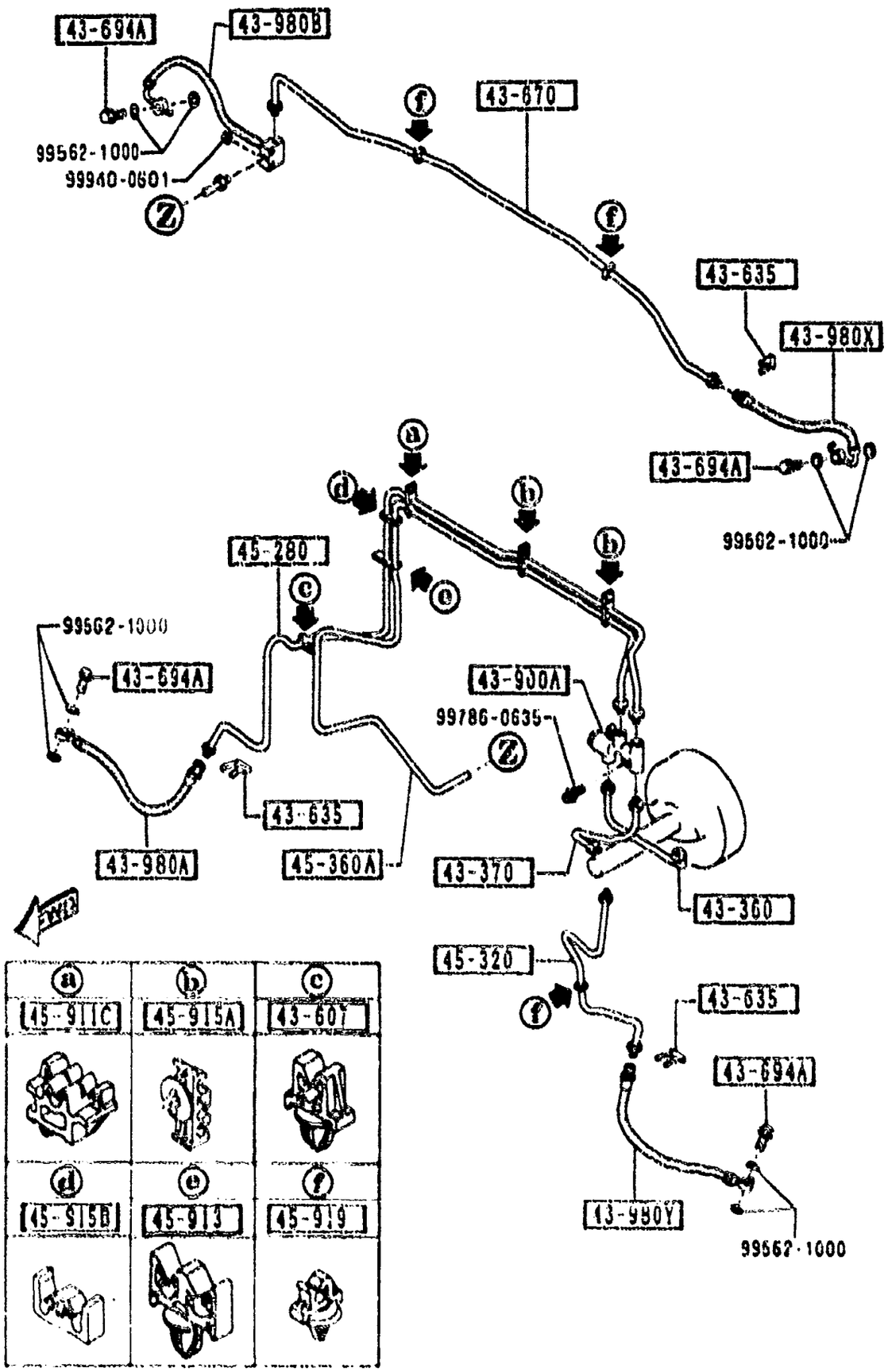

PART NO.	QTY	MODEL/RESTRICTION	MODEL/RESTRICTION	MODEL/RESTRICTION	FROM-TO
43-360		PIPE,BRAKE			
NA01-43-360A	1				
43-370		PIPE,BRAKE			
NA01-43-370	1				
43-607		CLIP,RR BRAKE PIPE			
G309-43-607	1				
43-635		CLIP,FLEXIBLE HOSE			
W023-43-635	3				
43-670		PIPE,BRAKE-REAR			
NA01-43-670A	1				
43-694A		BOLT,CONNECTOR			
B001-43-694A	4				
43-900A		VALVE,P.B.			
H380-43-900	1				
43-980A		HOSE(R),FLEXIBLE-FRT			
NA75-43-810	1				
43-980B		HOSE(R),FLEXIBLE-RR			
NA75-43-980	1				
43-980X		HOSE(L),FLEXIBLE-RR			
NA75-43-990	1				
43-980Y		HOSE(L),FLEXIBLE-FRT			
NA75-43-820	1				
45-280		PIPE(R),BRAKE-FRONT			
NA75-45-280	1				
45-320		PIPE(L),BRAKE-FRONT			
NA01-45-320C	1				
45-360A		PIPE,BRAKE-REAR			
NA75-45-360A	1				

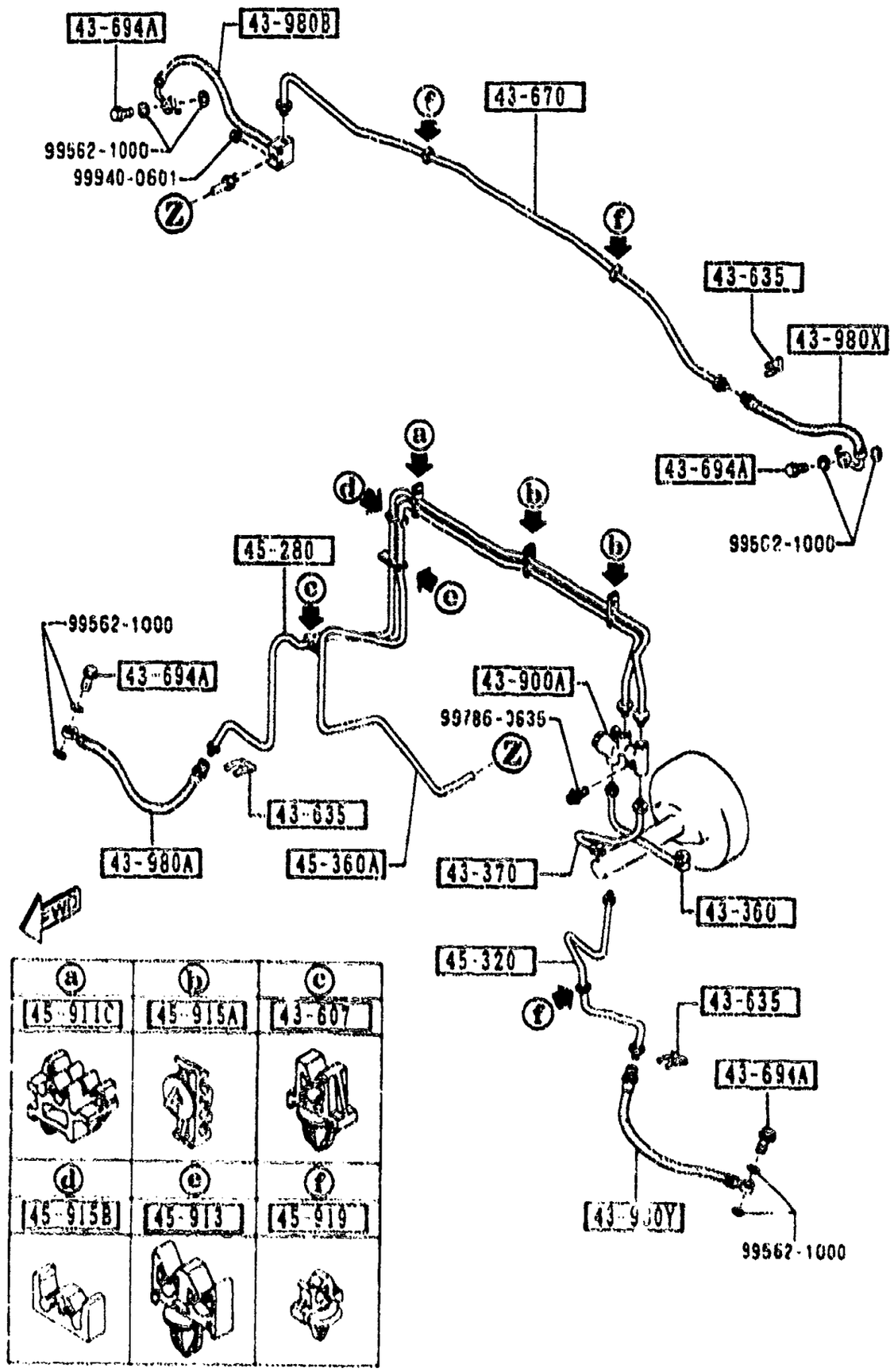

PART NO.	QTY	MODEL/RESTRICTION	MODEL/RESTRICTION	MODEL/RESTRICTION	FROM-TO
45-911C		CLIP,PIPE			
NA01-45-911	1				
45-913		HOLDER,PIPE			
NA75-45-913	1				
45-915A		HOLDER,PIPE			
B001-45-915	2				
45-915B		HOLDER,PIPE			
NA01-45-915A	1				
45-919		CLIP,PIPE			
B001-45-919B	3				

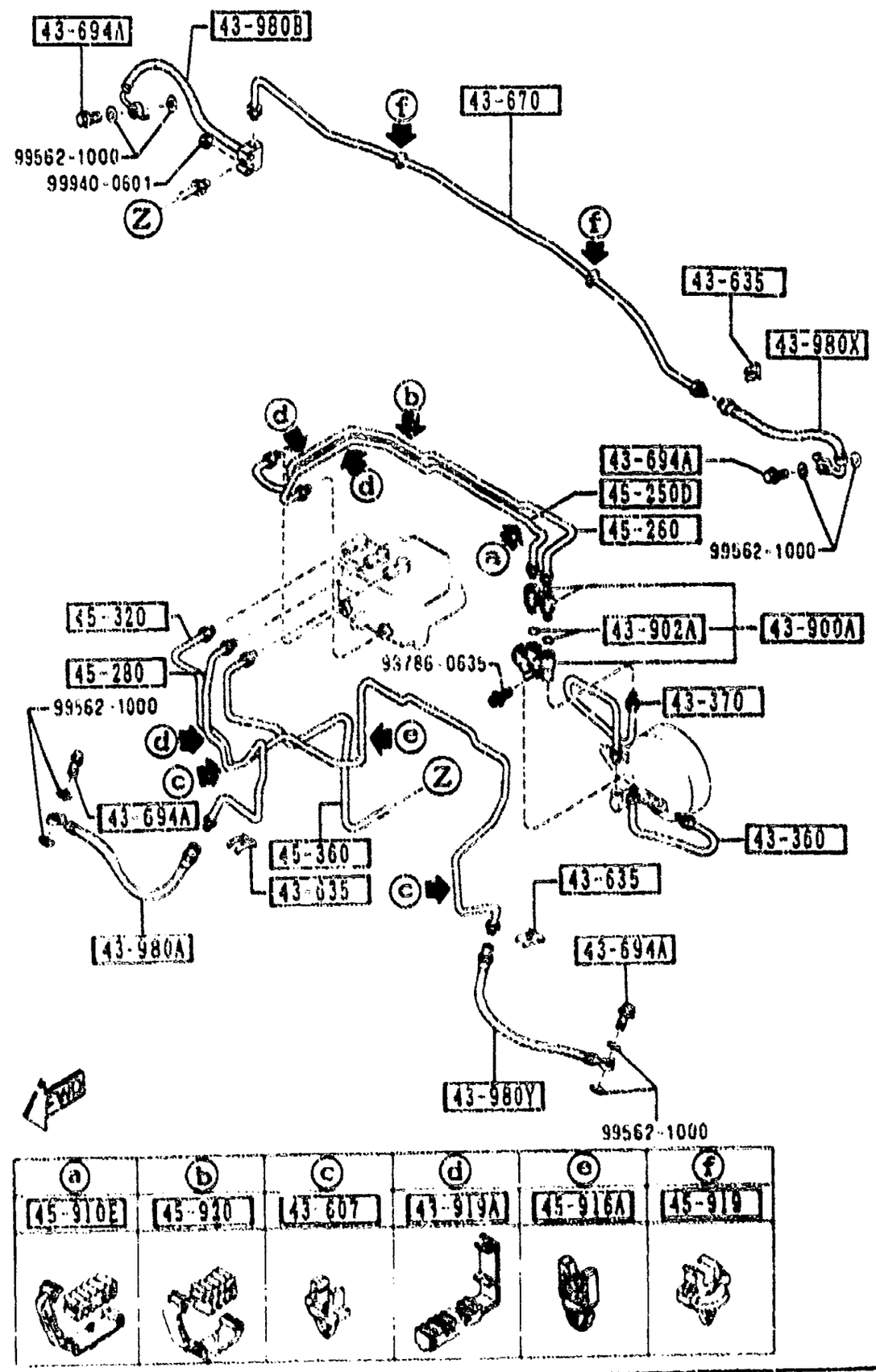

PART NO.	QTY	MODEL/RESTRICTION	MODEL/RESTRICTION	MODEL/RESTRICTION	FROM-TO
43-360 NA23-43-360A	1	PIPE,BRAKE			
43-370 NA23-43-370A	1	PIPE,BRAKE			
43-607 G309-43-607	2	CLIP,RR BRAKE PIPE			
43-635 W023-43-635	3	CLIP,FLEXIBLE HOSE			
43-670 NA01-43-670A	1	PIPE,BRAKE-REAR			
43-694A B001-43-694A	4	BOLT,CONNECTOR			
43-900A FD04-43-920	1	VALVE,P.B.			
43-902A NA17-43-902	2	RING'O'			
43-919A NA20-45-915	5	HOLDER,BRAKE PIPE			
43-980A NA75-43-810	1	HOSE(R),FLEXIBLE-FRT			
43-980B NA75-43-980	1	HOSE(R),FLEXIBLE-RR			
43-980X NA75-43-990	1	HOSE(L),FLEXIBLE-RR			
43-980V NA75-43-820	1	HOSE(L),FLEXIBLE-FRT			
45-250D NA20-45-230C	1	PIPE NO.1,BRAKE-FRT			

4360 A BRAKE PIPINGS (ANTI LOCK BRAKE SYSTEM)

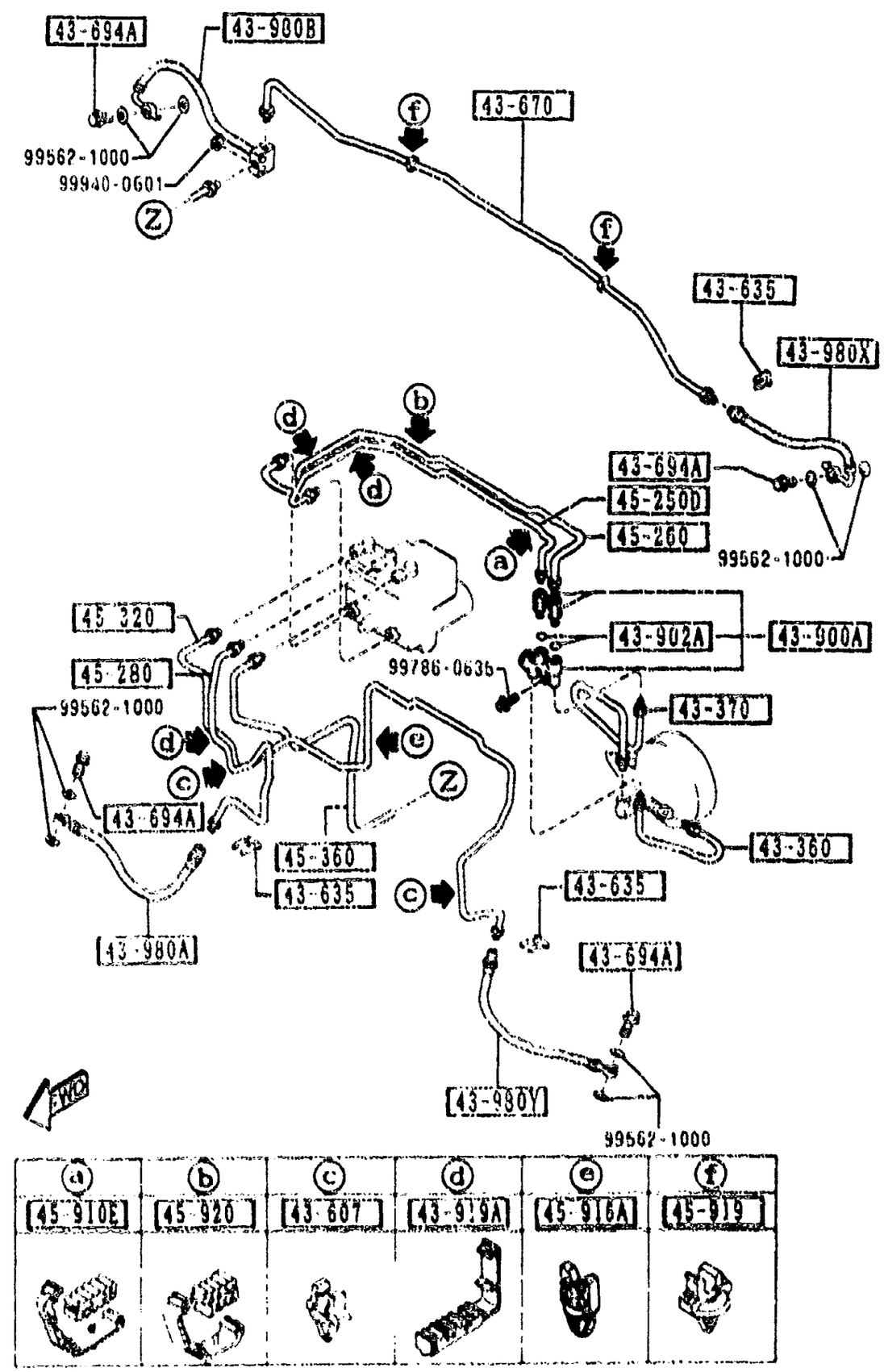

4360 A-2 * BRAKE PIPINGS (ANTI LOCK BRAKE SYSTEM)

PART NO.	QTY	MODEL/RESTRICTION	MODEL/RESTRICTION	MODEL/RESTRICTION	FROM-TO
45-260 NA20-45-240C	1	PIPE NO.2,BRAKE-FRT.			
45-280 NA20-45-280B	1	PIPE(R),BRAKE-FRONT			
45-320 NA80-45-320	1	PIPE(L),BRAKE-FRONT			
45-360 NA20-45-360E	1	PIPE NO.2,BRAKE-REAR			
45-910E NA20-45-910A	1	HOLDER,PIPE			
45-916A HG31-45-915	1	HOLDER,PIPE			
45-919 B001-45-919B	2	CLIP,PIPE			
45-920 NA20-45-920B	1	BRACKET			

4370 -1 ANTILOCK BRAKE SYSTEM

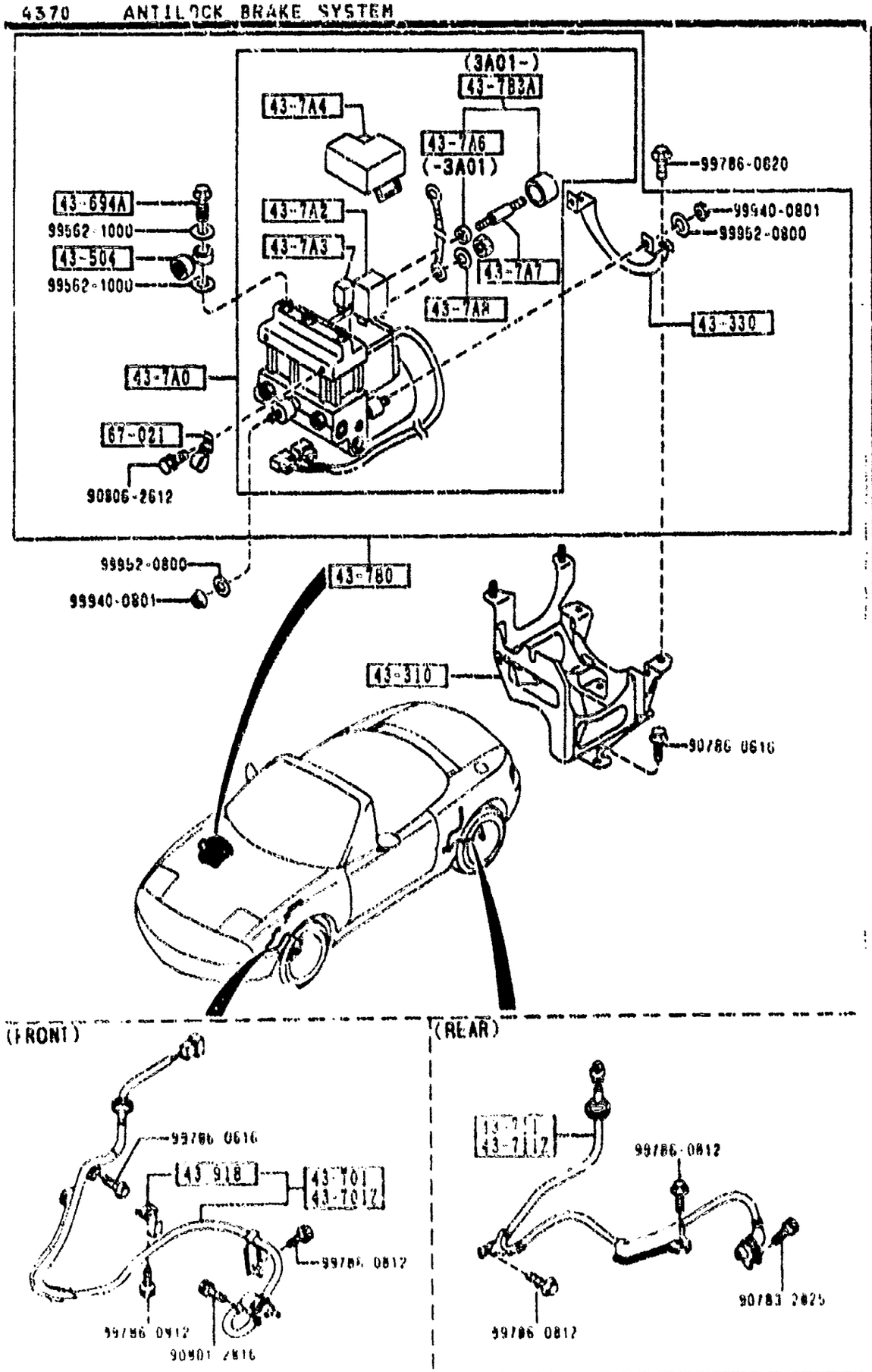

PART NO.	QTY	MODEL/RESTRICTION	MODEL/RESTRICTION	MODEL/RESTRICTION	FROM-TO
43-310 NA23-43-310B	1	BRACKET NO 1,A.B.S.			
43-330 NA23-43-330B	1	BRACKET NO.5,A.B.S.			
43-504 W023-43-504	3	JOINT,PIPE			
43-694A B001-43-694A	3	BOLT,CONNECTOR			
43-7A0 NA23-43-7A0D	1	HYDRAULIC UNIT,A B S			
43-7A2 NA23-43-7A2	1	RELAY,MOTOR-HYD. UNIT			
43-7A3 NA23-43-7A3	1	RELAY,VALVE-HYD. UNIT			
43-7A4 NA23-43-7A4	1	COVER'L',HYDRAULIC UNIT			
43-7A6 NA23-43-7A6	1	RUBBER,MOUNT-HYD. UNIT			-3A01
43-7A7 NA23-43-7A7	3	STUD HEX-HYD. UNIT			
43-7A8 NA23-43-7A8	1	WASHER,HYD. UNIT			
43-783A NA23-43-783	3	CASING,HYDRAULIC UNIT			3A01-
43-701 NA23-43-70XE	1	SENSOR(R),FRT-A.B.S.			
43-701Z NA23-43-73XE	1	SENSOR(L),FRT-A.B.S.			

3A01 NA3###-505179

4370 ANTILOCK BRAKE SYSTEM

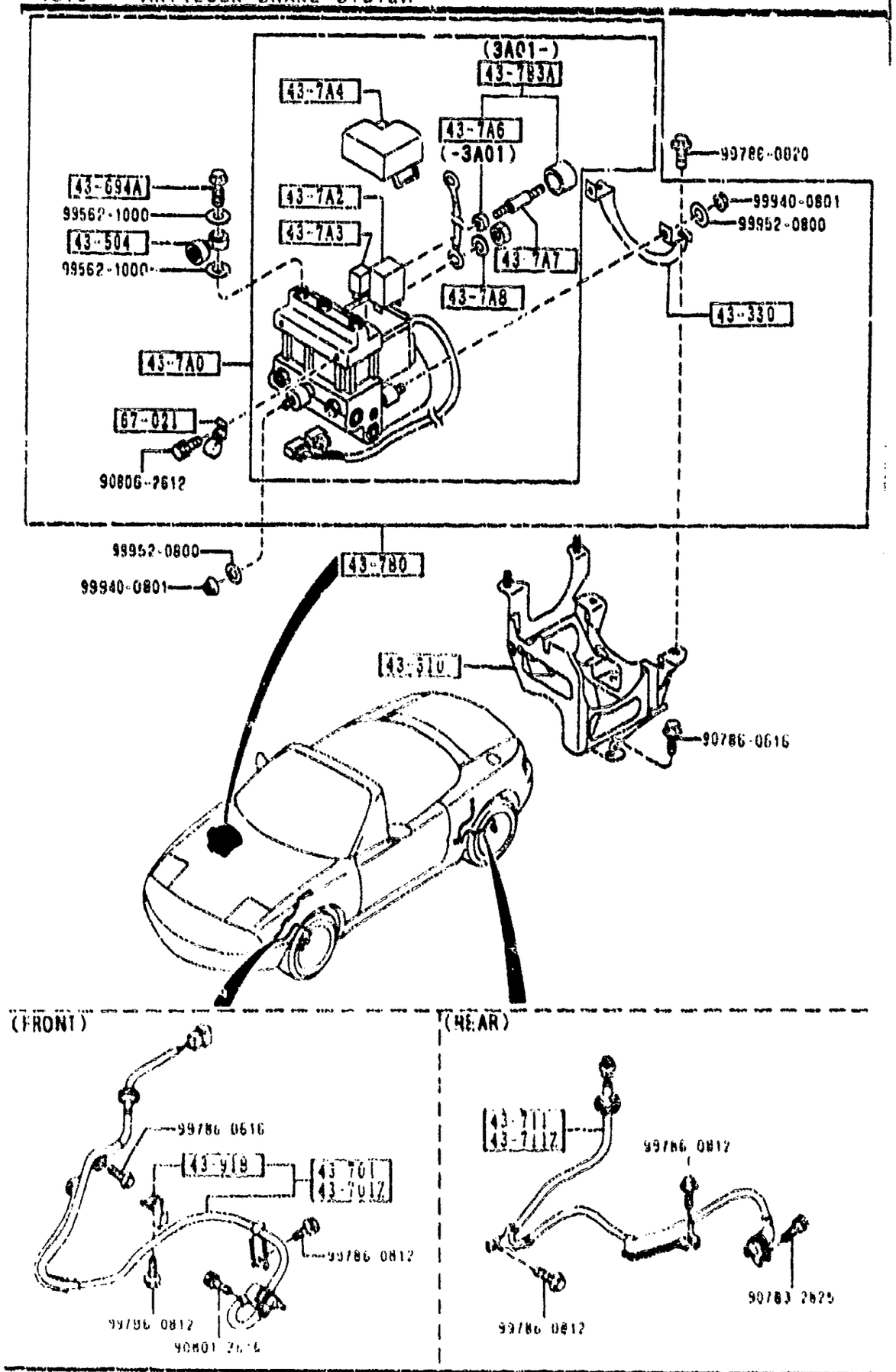

AUNA04

PART NO.	QTY	MODEL/RESTRICTION	MODEL/RESTRICTION	MODEL/RESTRICTION	PROV-TO
43-711 NA23-43-71YB	1	SENSOR(R),RR A.B.S.			
43-711Z NA23-43-72YB	1	SENSOR(L),RR-A.B.S.			
43-780 NA23-43-780G	1	ANTILOCK BRAKE			
43-918 NA23-43-705	2	CLIP,SENSOR HARNESS			
67-021 BE32-67-021	2	CLIP			

4400 PARKING BRAKE SYSTEM

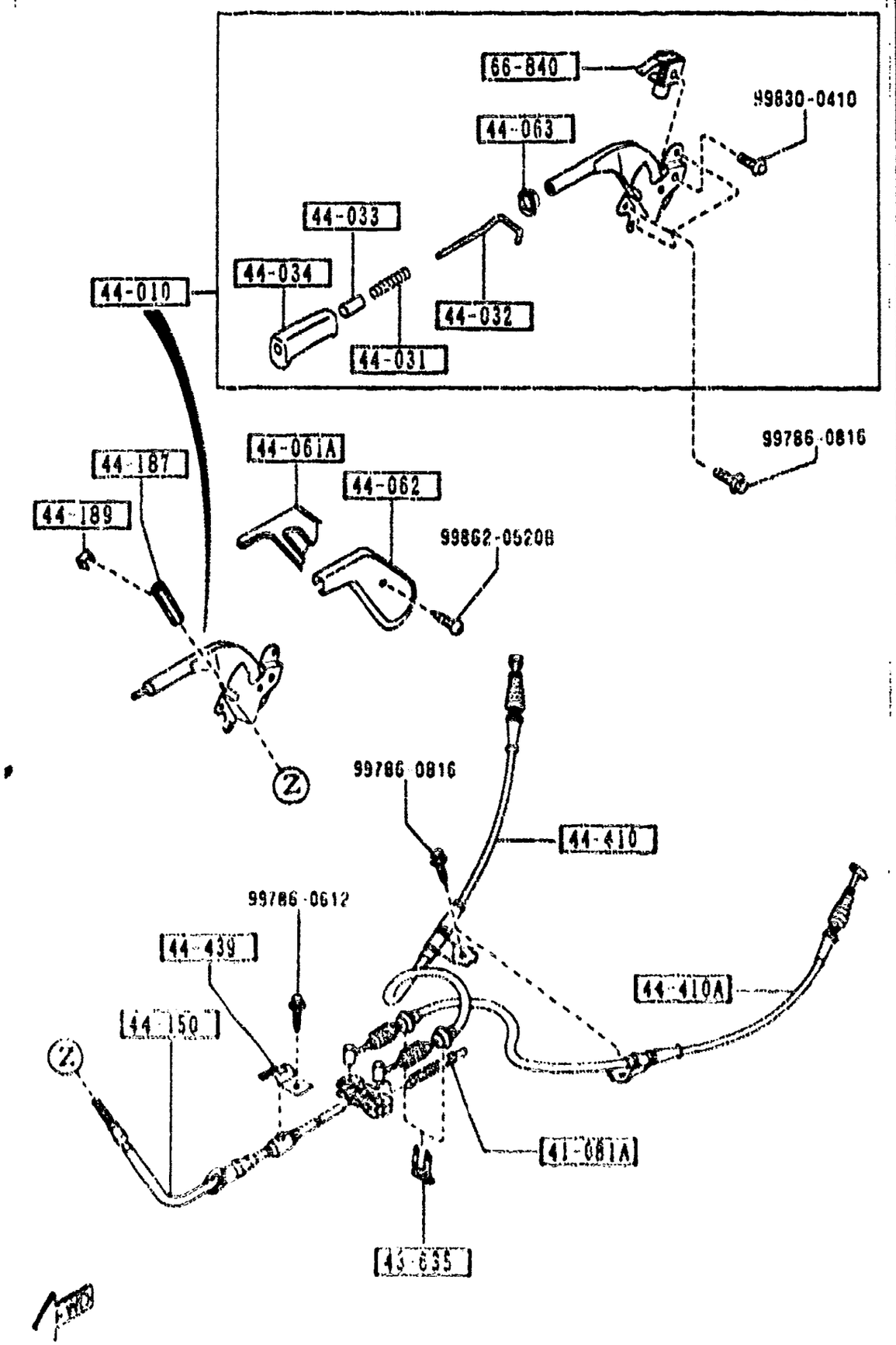

PART NO.	QTY	MODEL/RESTRICTION	MODEL/RESTRICTION	MODEL/RESTRICTION	PAGE-XX
41-081A		SPRING,RETURN			
0750-41-308	1				
43-635		CLIP,FLEXIBLE HOSE			
W023-43-635	2				
44-010		LEVER,PARKING BRAKE			
NA01-44-010	1	BASE, (URETHANE)			
N001-44-010A	1	(WOOD)			
44-031		SPRING,PARKING REVER			
G030-44-031	1				
44-032		ROD,RELEASE			
NA01-44-032	1				
44-033		BUTTON,RELEASE			
FB01-44-033	1				
44-034		CAP,PARK BRAKE LEVER			
FB01-44-034	1	BASE, (URETHANE)			
N001-44-034B	1	(WOOD)			
44-061A		COVER			
FN01-44-061B	1				
44-062		COVER			
FB01-44-062A	1				
44-063		SPACER			
FC01-44-063A	1	BASE (URETHANE)			
N001-44-063	1	(WOOD)			
44-150		CABLE,PARKING-FRT			
NA01-44-150B	1				-3819
AN(NA01-44-150C)					
NA01-44-150C	1				3819-

3819 NA3***-507138

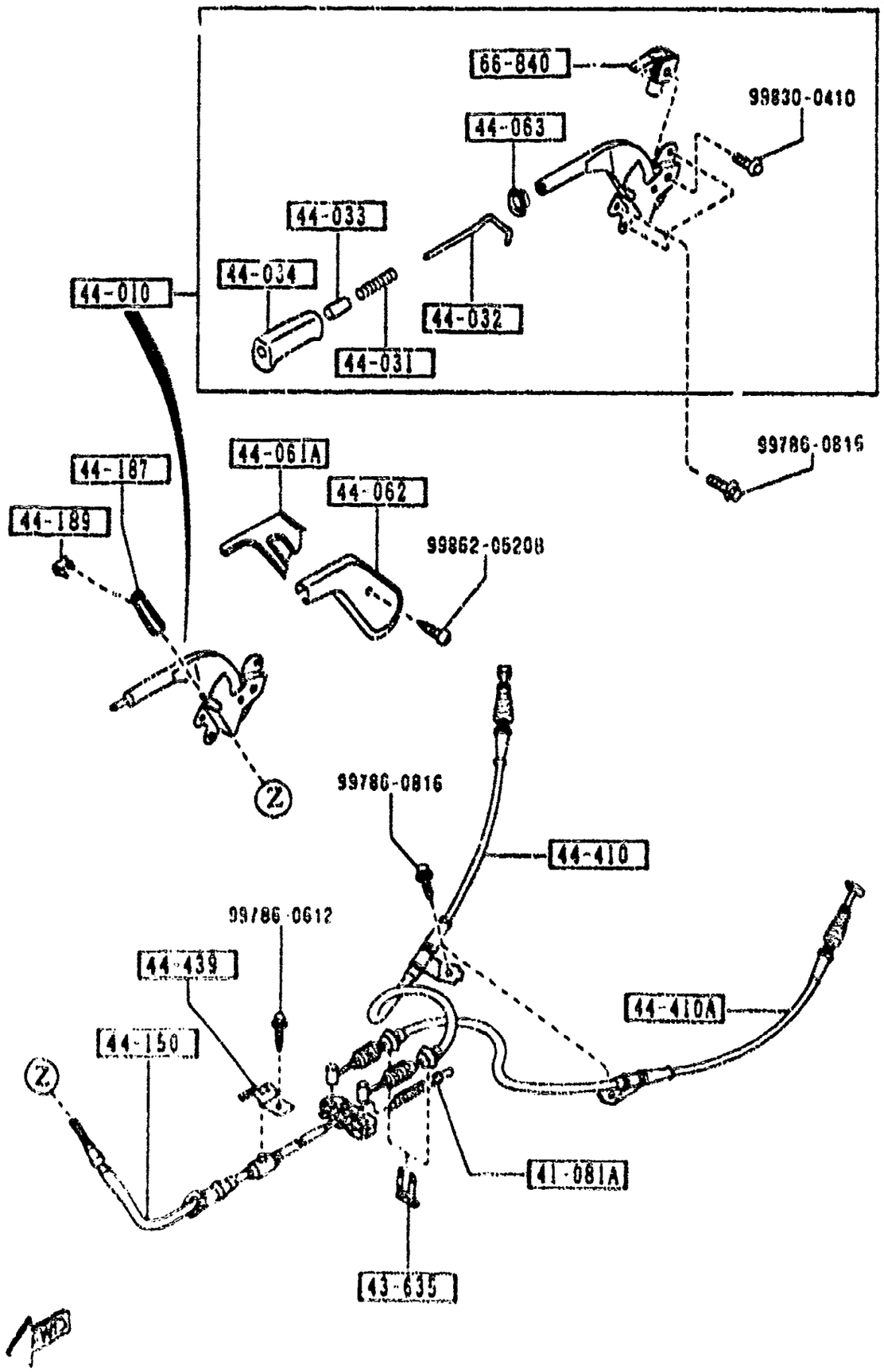

AUNA04

PART NO.	QTY	MODEL/RESTRICTION	MODEL/RESTRICTION	MODEL/RESTRICTION	REMARKS
44-187		SCREW,ADJUST			
0866-44-187A	1				
44-189		CLIP			
0866-44-189	1				
44-410		CABLE(R).R.-PARK.			
NA75-44-410	1				
44-410A		CABLE(L),R.-PARK.			
NA75-44-420	1				
44-439		CLIP,CABLE			
1011-44-439	1				
66-840		SWITCH,PARKING LAMP			
GJ21-66-450A	1				

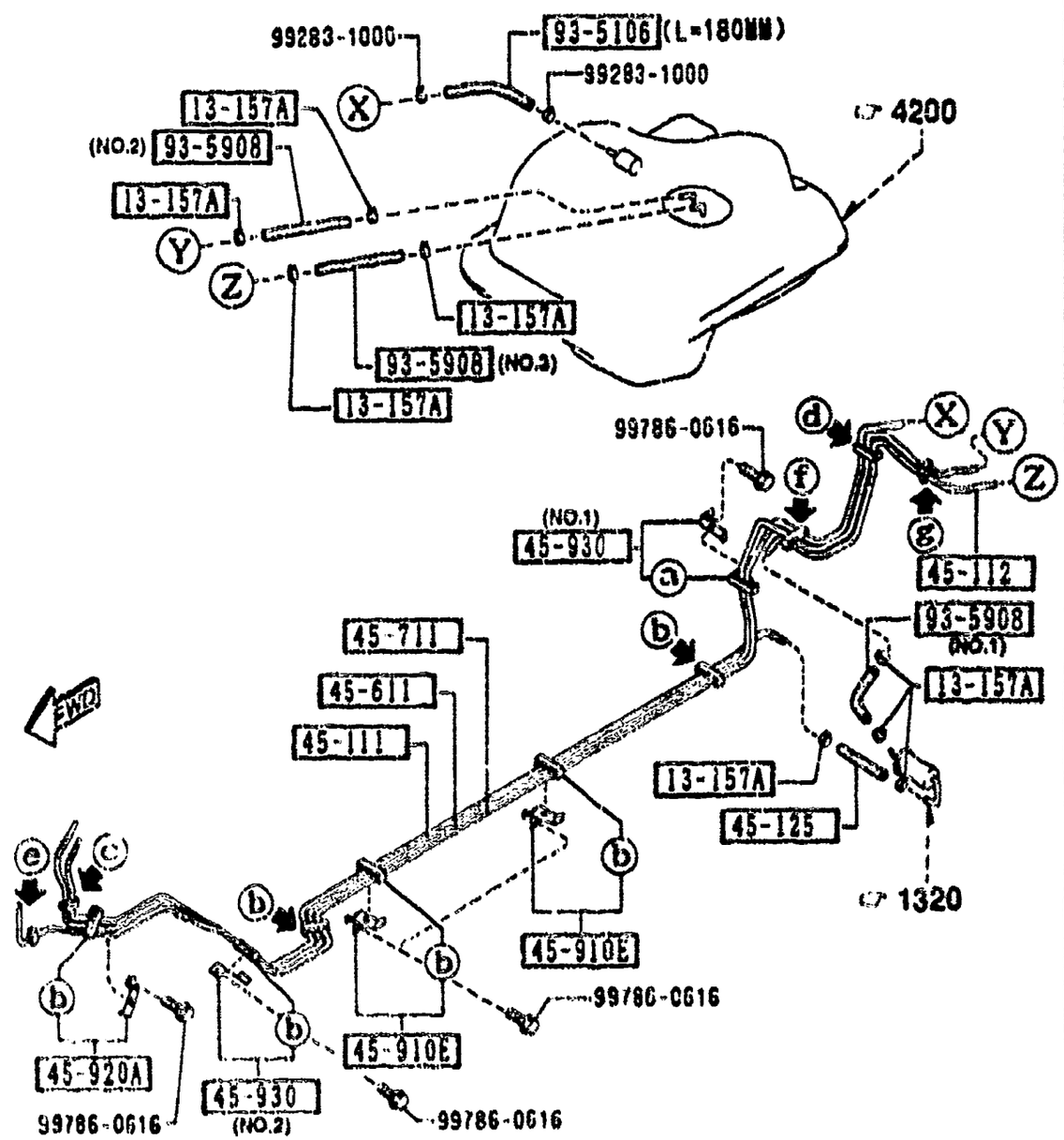

(a)	(b)	(c)	(d)	(e)	(f)	(g)
45-912D (NO.1)	45-912D (NO.2)	45-913	45-913A	45-914	45-915	45-921

93-5106		99351-06089	L=180MM

PART NO.	QTY	MODEL/RESTRICTION	MODEL/RESTRICTION	MODEL/RESTRICTION	FROM-TO
13-157A		CLIP			
8574-13-157	6				
45-111		PIPE,FUEL-MAIN			
NA01-45-111	1				
45-112		PIPE,FUEL-MAIN			
NA75-45-112A	1				
45-125		HOSE,FUEL			
99359-0815	1				
45-611		PIPE,FUEL-RETURN			
NA75-45-611A	1				
45-711		PIPE,EVAPORATION			
NA75-45-711A	1				
45-910E		HOLDER,PIPE			
H266-45-910A	2				
45-912D		HOLDER'A'			
H260-45-912	1	(ILLUST. NO.1)			
H266-45-912	6	(ILLUST. NO.2)			
45-913		HOLDER,PIPE			
NA01-45-912	1				
45-913A		CLIP,PIPE			
NA01-45-913	1				
45-914		HOLDER,PIPE			
FB01-45-914	1	HIFUKO			
45-915		CLIP,PIPE			
NA01-45-914	1				
45-920A		HOLDER'B',PIPE			
H266-45-920A	1				

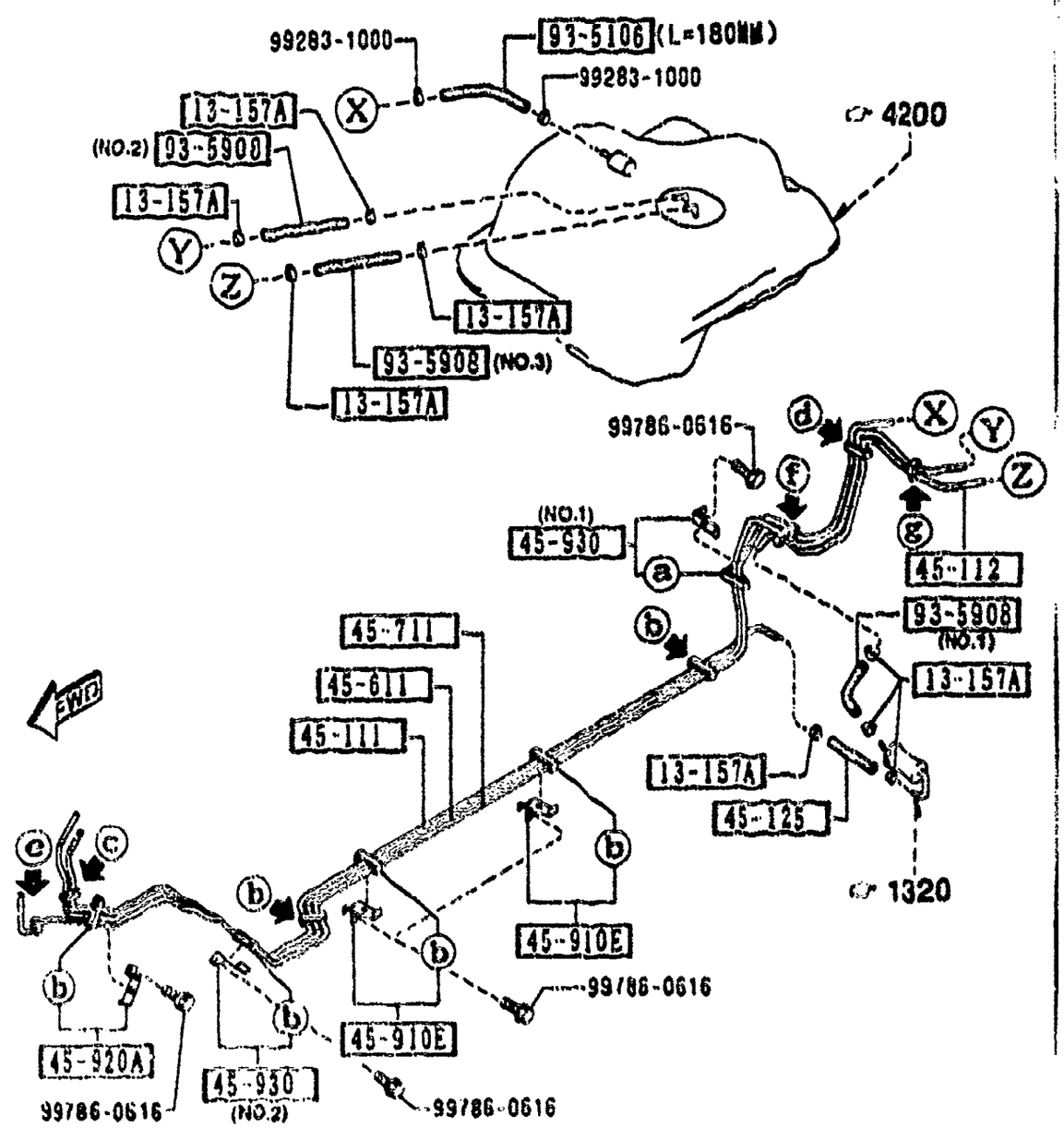

ⓐ	ⓑ	ⓒ	ⓓ	ⓔ	ⓕ	ⓖ
45-912D (NO.1)	45-912D (NO.2)	45-913	45-913A	45-914	45-915	45-921

93-5106	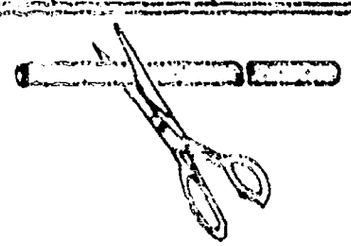	99351-06999	L=180MM

PART NO.	QTY	MODEL/RESTRICTION	MODEL/RESTRICTION	MODEL/RESTRICTION	FROM-TO
45-921		CLIP,PIPE			
H210-45-917	1				
45-930		HOLDER'C',PIPE			
H260-45-930	1	(ILLUST. NO.1)			
H266-45-930A	1	(ILLUST. NO.2)			
93-5106		HOSE			
99351-06999	1				
93-5908		HOSE			
99359-0816	1	(ILLUST. NO.1)			
99359-0817	1	(ILLUST. NO.2)			
99359-0818	1	(ILLUST. NO.3)			

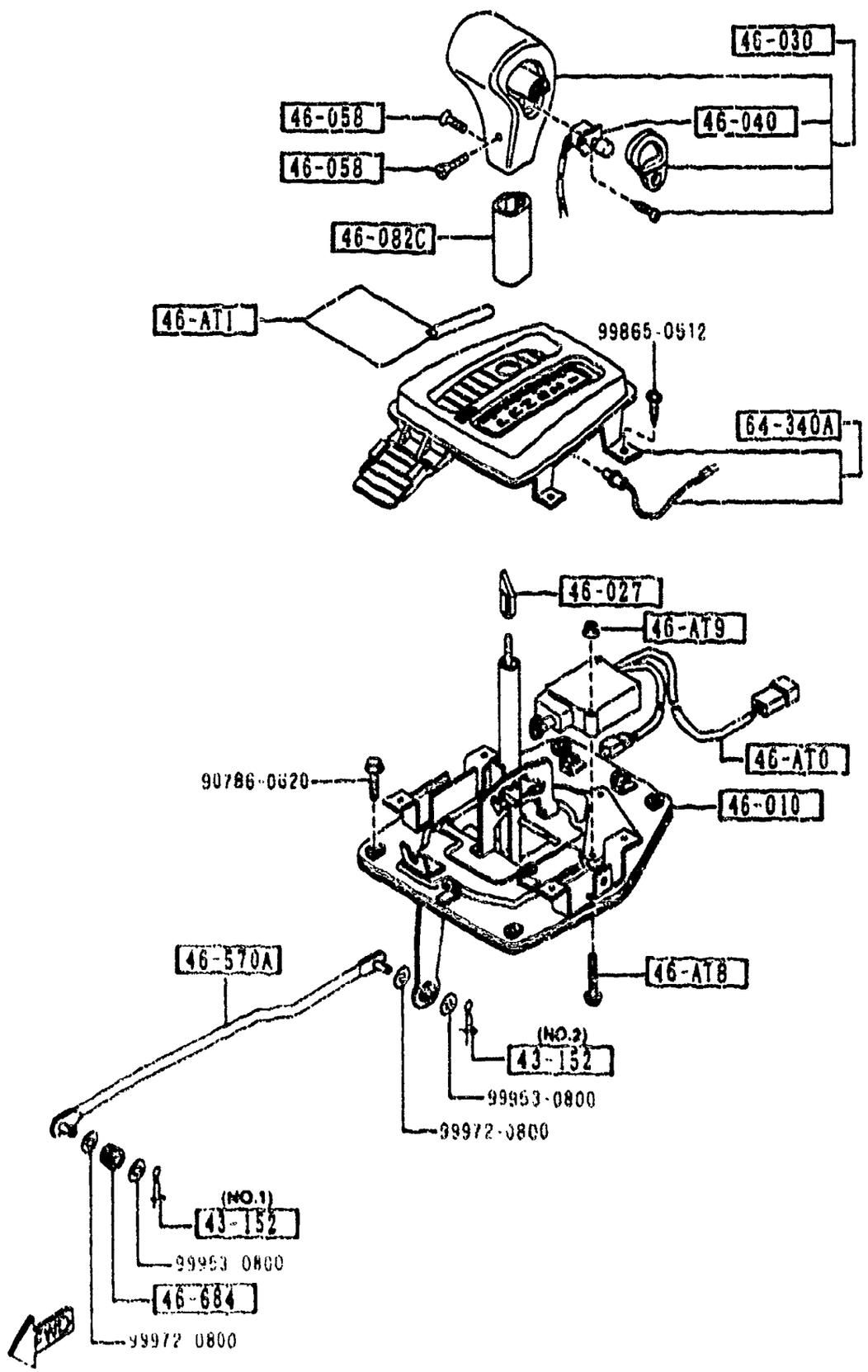

PART NO.	QTY	MODEL/RESTRICTION	MODEL/RESTRICTION	MODEL/RESTRICTION	FROM-TO
43-152		PIN,SNAP			
D001-43-152	1	(ILLUST. NO.1)			
FB02-43-152A	1	(ILLUST. NO.2)			
46-AT0		ACTUATOR,SHIFT LOCK			
NA81-46-AT0A	1				
46-AT1		TAG,CAUTION-CHANGE			
FD02-46-AT1	1				
46-AT8		SCREW			
H338-46-AT8	2				
46-AT9		NUT			
H338-46-AT9	2				
46-010		LEVER,SELECT			
NA81-46-100	1				
46-027		CAM,CHANGE LEVER			
H338-46-027	1				
46-030		KNOB,CHANGE LEVER			
NA81-46-030A	1				
46-040		SWITCH,OVER DRIVE CONTROL			
NA81-46-040	1				
46-058		SCREW,CHANGE LEVER KNOB			
FB02-46-058C	2				
46-082C		COVER,SELECT LEVER			
NA03-46-088	1				
46-570A		ROD,SELECTOR-REAR			
NA03-46-570	1				
46-684		BUSH			
1015-46-684A	1				

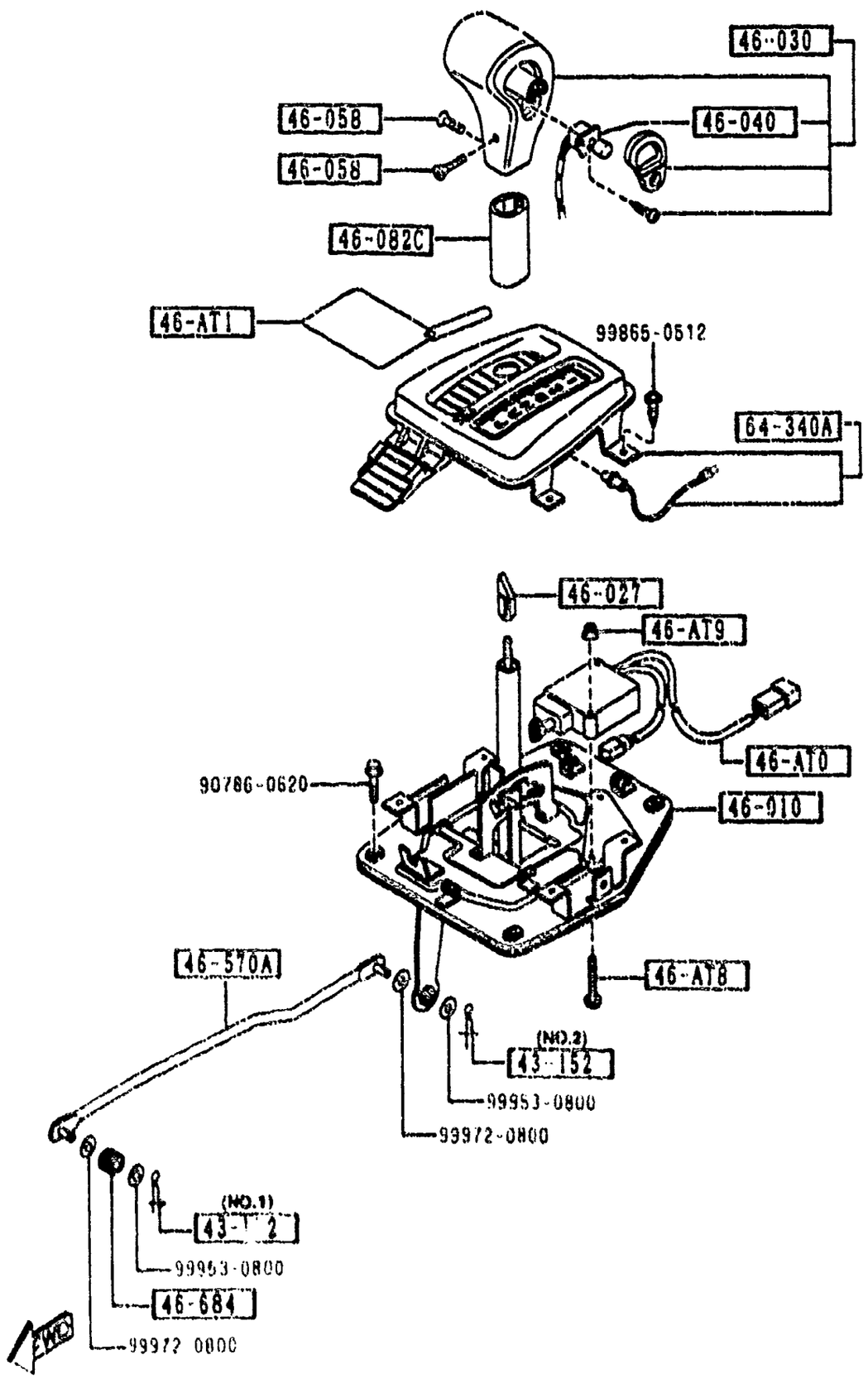

PART NO.	QTY	MODEL/RESTRICTION	MODEL/RESTRICTION	MODEL/RESTRICTION	FROM-TO
64-340A		INDICATOR			
NA81-64-350 AN(NA81-64-350A)	1				-4201
NA81-64-350A	1				4201-

4201 NA3###-511601