Parts Catalog

Mazda MX-5 MIATA U.S.A. ('94)

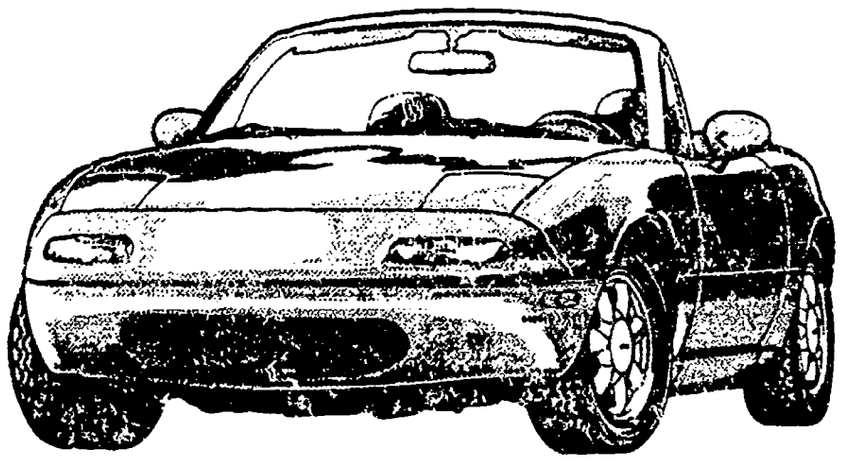

NA3•••-500001~600000

Apr.'95 (FINAL)

Catalog No. AU-NA04-03

mazda

© 1995 Mazda Motor Corporation

LAYOUT OF CONTENTS / DISPOSITION TYPOGRAPHIQUE DE CONTENU / DISPOSICION DEL CONTENIDO / ANORDNUNG DES INHALTS

- The following is a typical example of the layout of contents on Mazda microfiche parts catalog
- Voici un exemple typique de la disposition typographique de contenu dans les microfiches de catalogue des pièces de Mazda.
- El siguiente es un ejemplo típico de la disposición del contenido en una microficha del catálogo de repuestos de Mazda.
- Folgendes ist ein typisches Beispiel der Inhaltsanordnung des Mazda-Mikrofiche-Teilekatalogs.

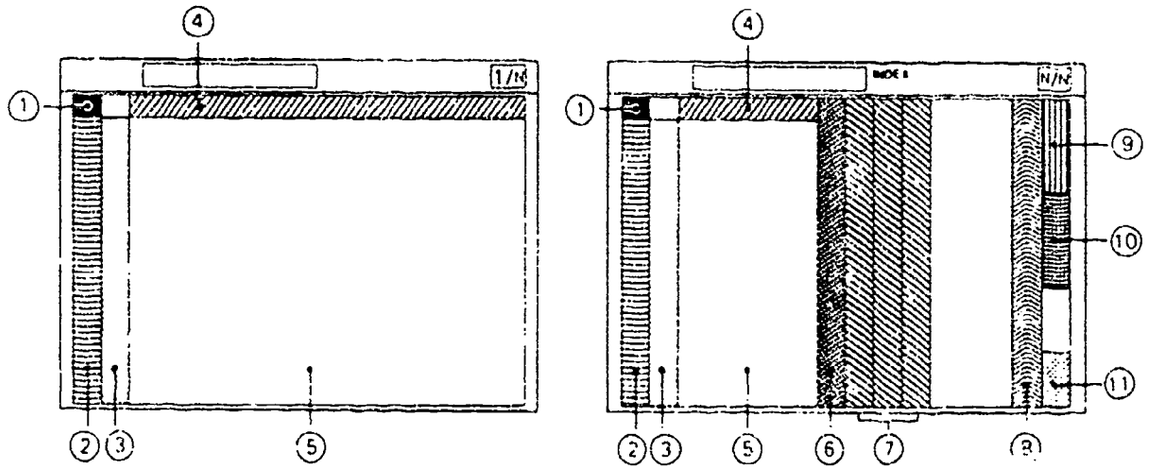

Remark : The items listed under ④ have been deleted from each fiche since Dec. '93

① • Layout of contents
• Disposition Typographique de Contenu
• Disposición del contenido
• Anordnung des Inhalts

② • Pictorial Index
• Index par Schémas
• Indice Gráfico
• Illustrierter Index

③ • Master Section No. Index
• Index des Numéros des Sections Totale
• Indice del Número de la Sección Maéstra
• Hauptabschnitssnummer-Index

~~④ • Section No. Index for the Column~~
~~• Index des Numéros des Sections pour les Colonnes~~
~~• N° de la Sección para el Indice~~
~~• Abschnitssnummer-Index für die Spalte~~

⑤ • Illustration & Text
• Illustrations et Textes
• Ilustración y Texto
• Abbildung und Text

⑥ • Part No. Index
• Index des Numéros des Pièces
• Indice del N° de Pieza
• Teile Nr.-Index

⑦ • Alphabetical Index
• Index Alphabétique
• Indice Alfabético
• Alphabetischer Index

⑧ • Model Identification
• Identification des Modèles
• Identificación del Modelo
• Modell-Kennzeichnung

⑨ • Vehicle Identification System
• Système d'Identification de Véhicule
• Sistema de Identification de Vehiculo
• Fahrzeug-Identifikations system

PICTORIAL INDEX

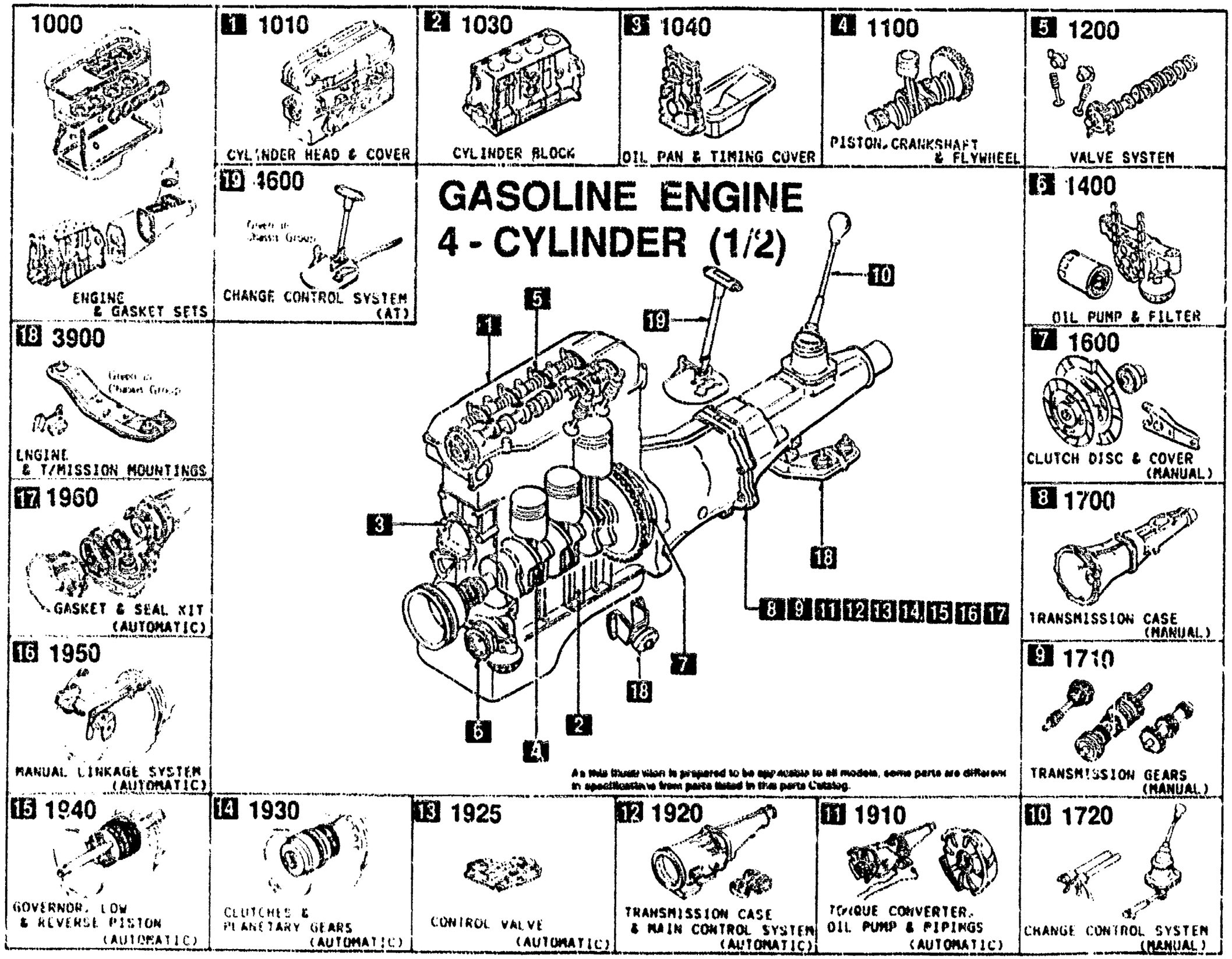

PICTORIAL INDEX

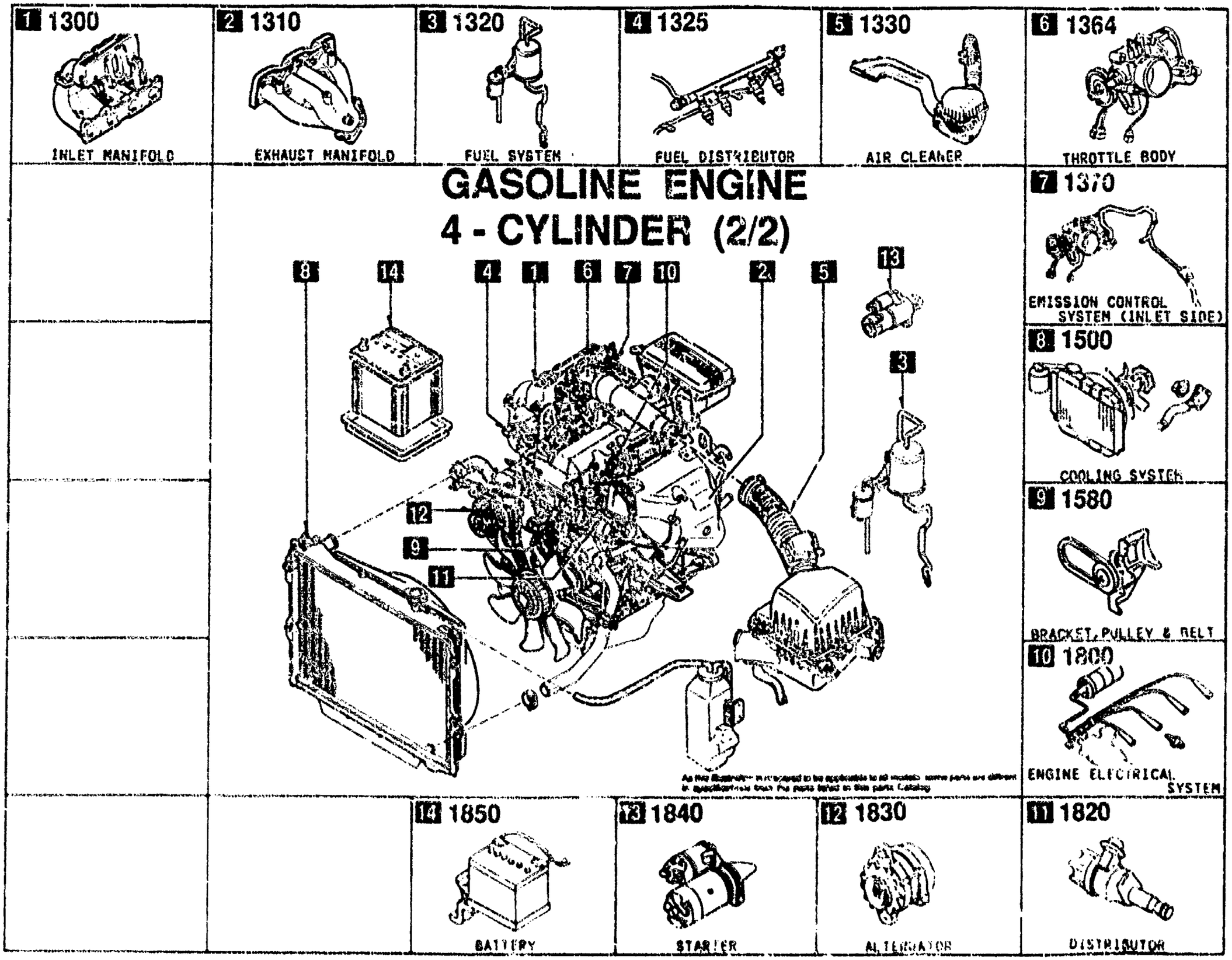

PICTORIAL INDEX

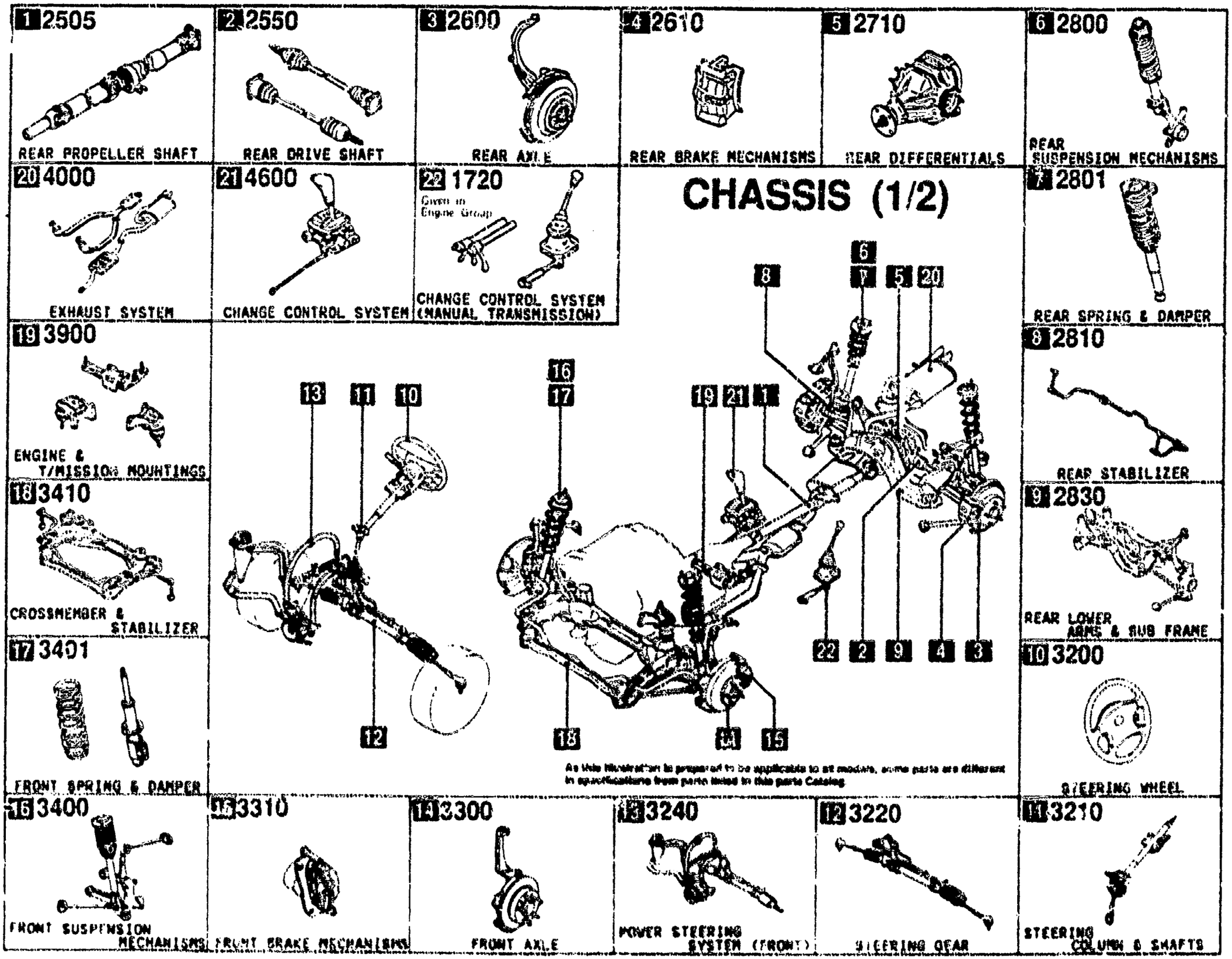

PICTORIAL INDEX

1 3700

TIRES & JACK

2 4140

CLUTCH RELEASE & MASTER CYLINDERS

3 4145

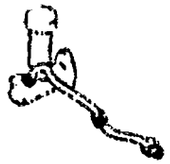

CLUTCH PIPINGS

4 4160

ACCELERATOR CONTROL SYSTEM

5 4200

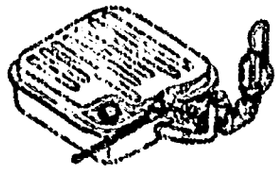

FUEL TANK

6 4210

FUEL LID OPENER

CHASSIS (2/2)

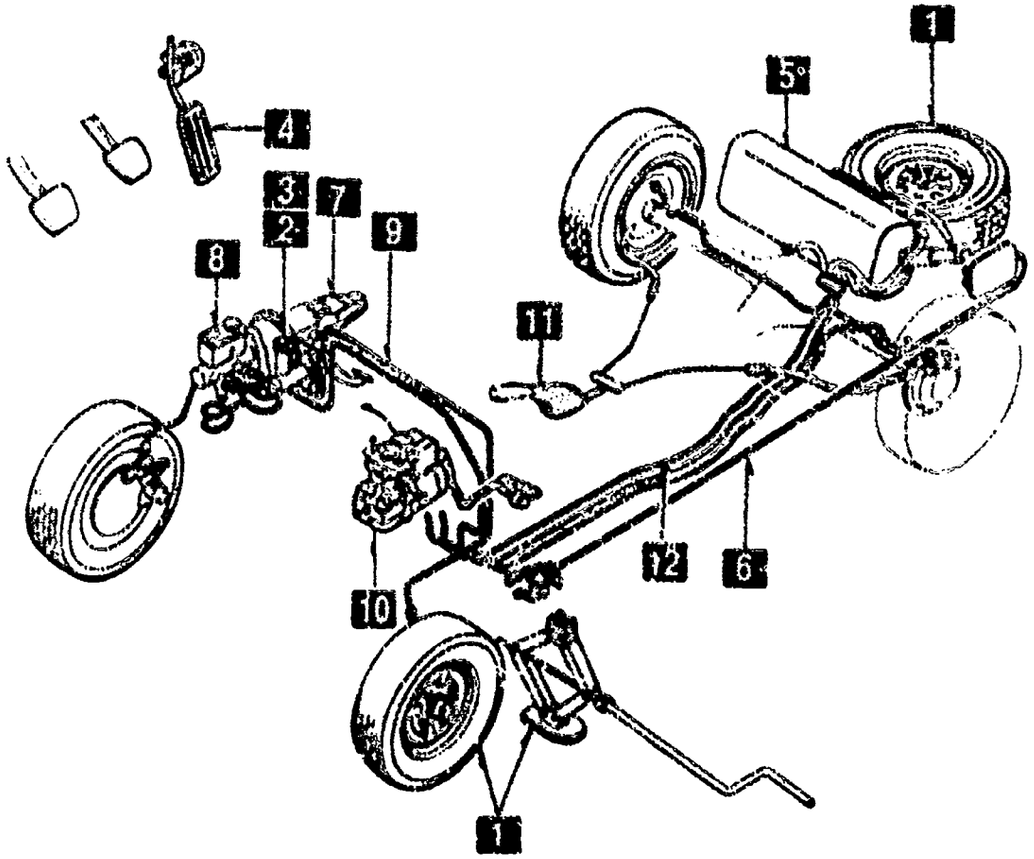

As this illustration is prepared to be applicable to all models, some parts are different in specifications from parts listed in this parts Catalog

7 4300

CLUTCH & BRAKE PEDALS

8 4340

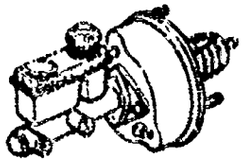

BRAKE MASTER CYLINDER & POWER BRAKE

9 4360

BRAKE PIPINGS

10 4370

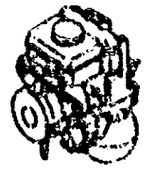

ANTILOCK BRAKE SYSTEM

12 4500

FUEL PIPINGS

11 4400

PARKING BRAKE SYSTEM

PICTORIAL INDEX

1 0900 KEY SETS	2	3 5100 HEAD LAMPS	4 5103 HEAD LAMP RETRACTORS	5 5105 FRONT COMBINATION LAMPS	6 5110 REAR COMBINATION LAMPS
19 6704 WIRING HARNESS CLAMPS	20 6720 WINDSHIELD WASHER	21 6730 6740 WINDSHIELD WIPERS			7 5120 LICENSE LAMPS
18 6703 WIRING HARNESSES (DOOR, FLOOR/CEILING)					8
17 6702 WIRING HARNESSES (DASHBOARD)					9
16 6700 WIRING HARNESSES (FRONT & REAR)					10 6600 SWITCHES & RELAYS (ENGINE)
15 6701 WIRING HARNESSES (ENGINE & T/MISSION)	14 6640 AUTO CRUISE CONTROL SYSTEM	13 6635 DOOR SWITCH & HORNS	12 6630 RELAYS & UNIT (BODY)	11	

BODY (1/4)

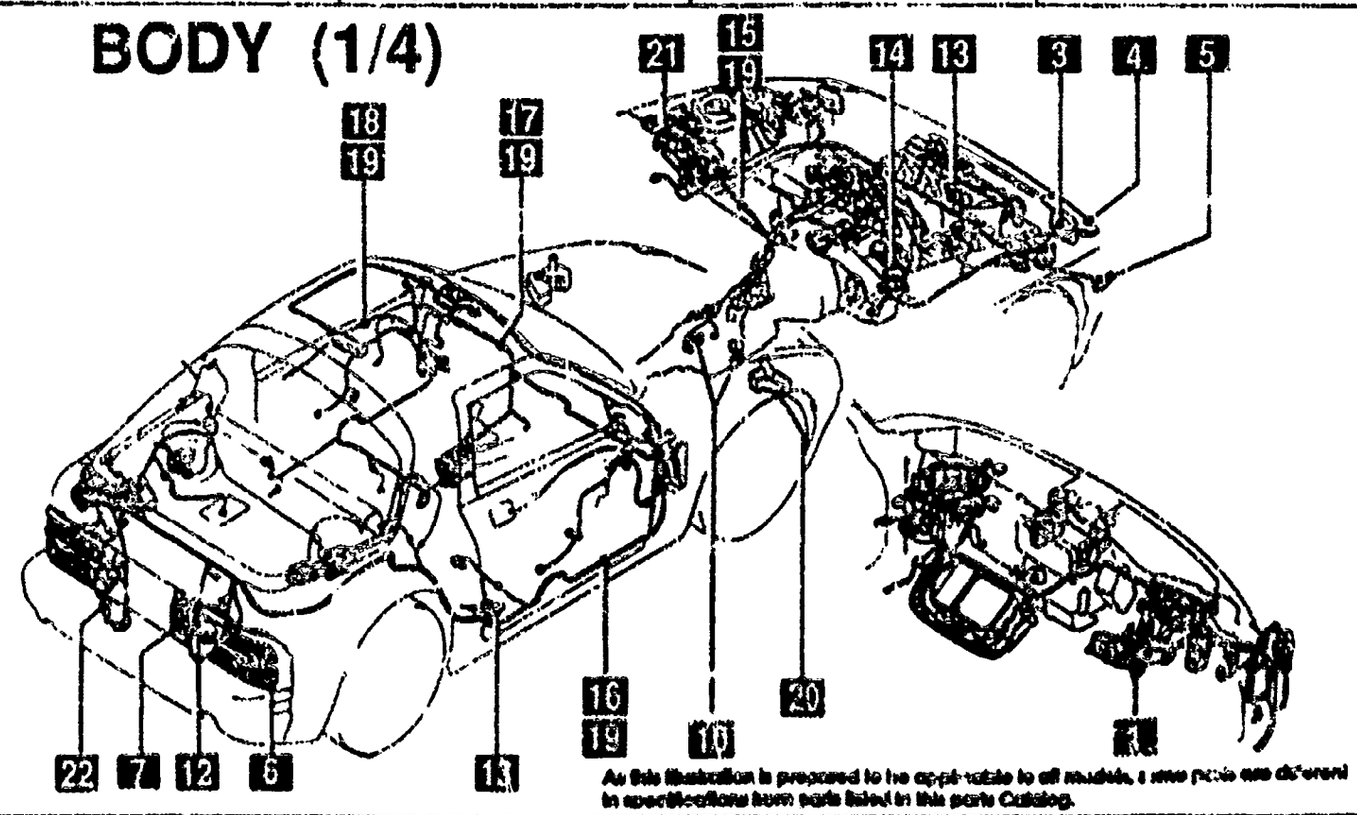

As this illustration is prepared to be applicable to all models, some parts are different in specifications from parts listed in this parts Catalog.

PICTORIAL INDEX

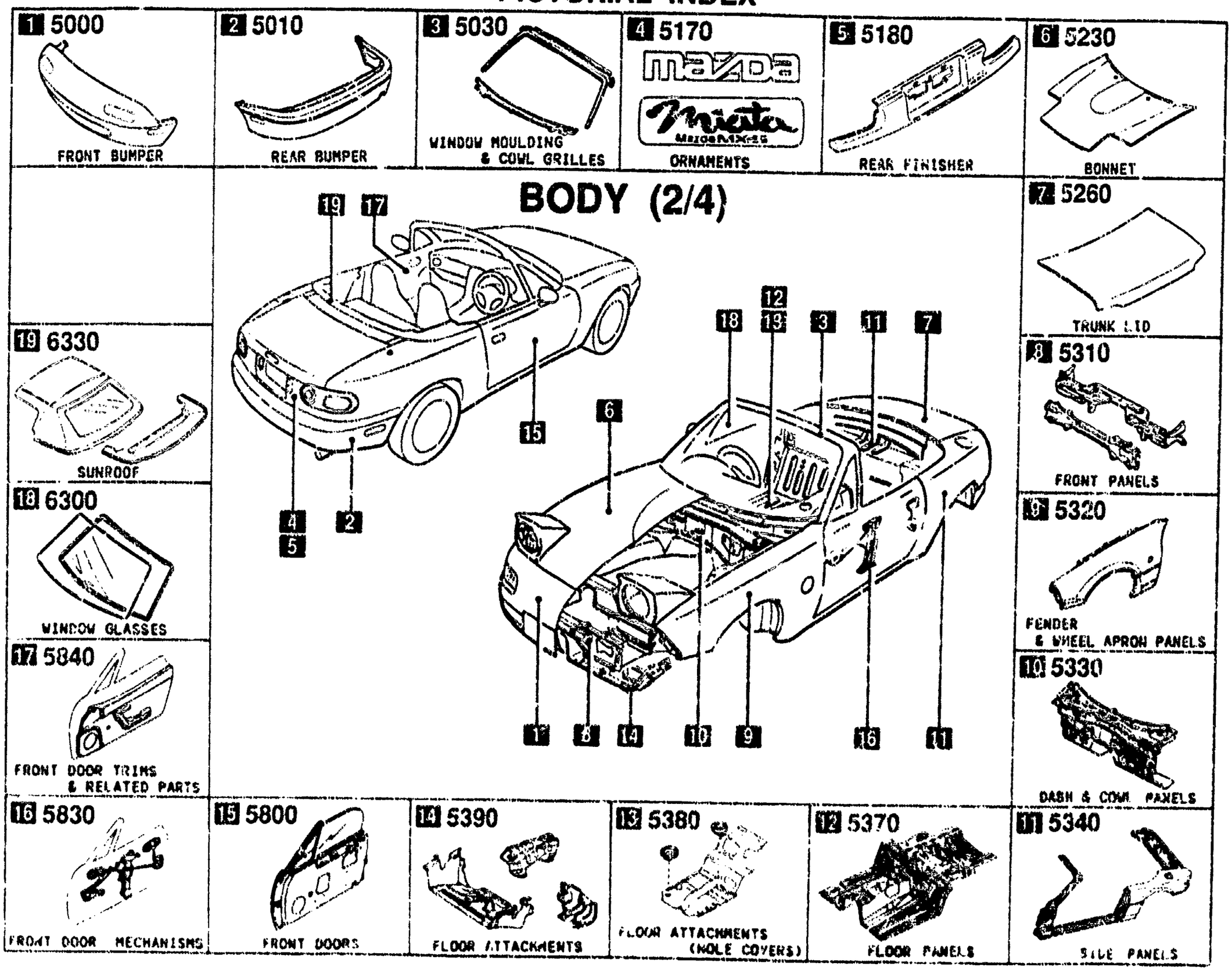

PICTORIAL INDEX

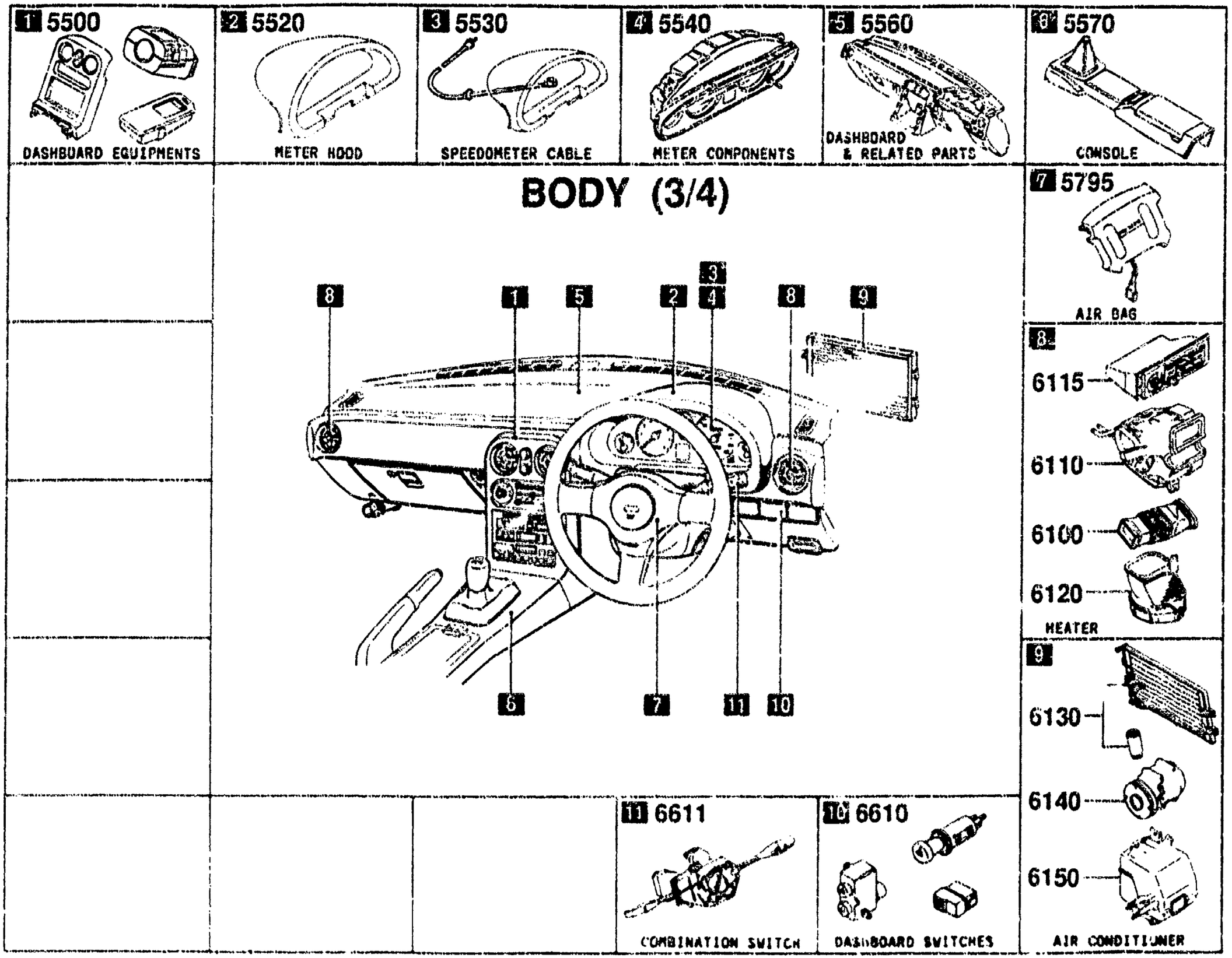

PICTORIAL INDEX

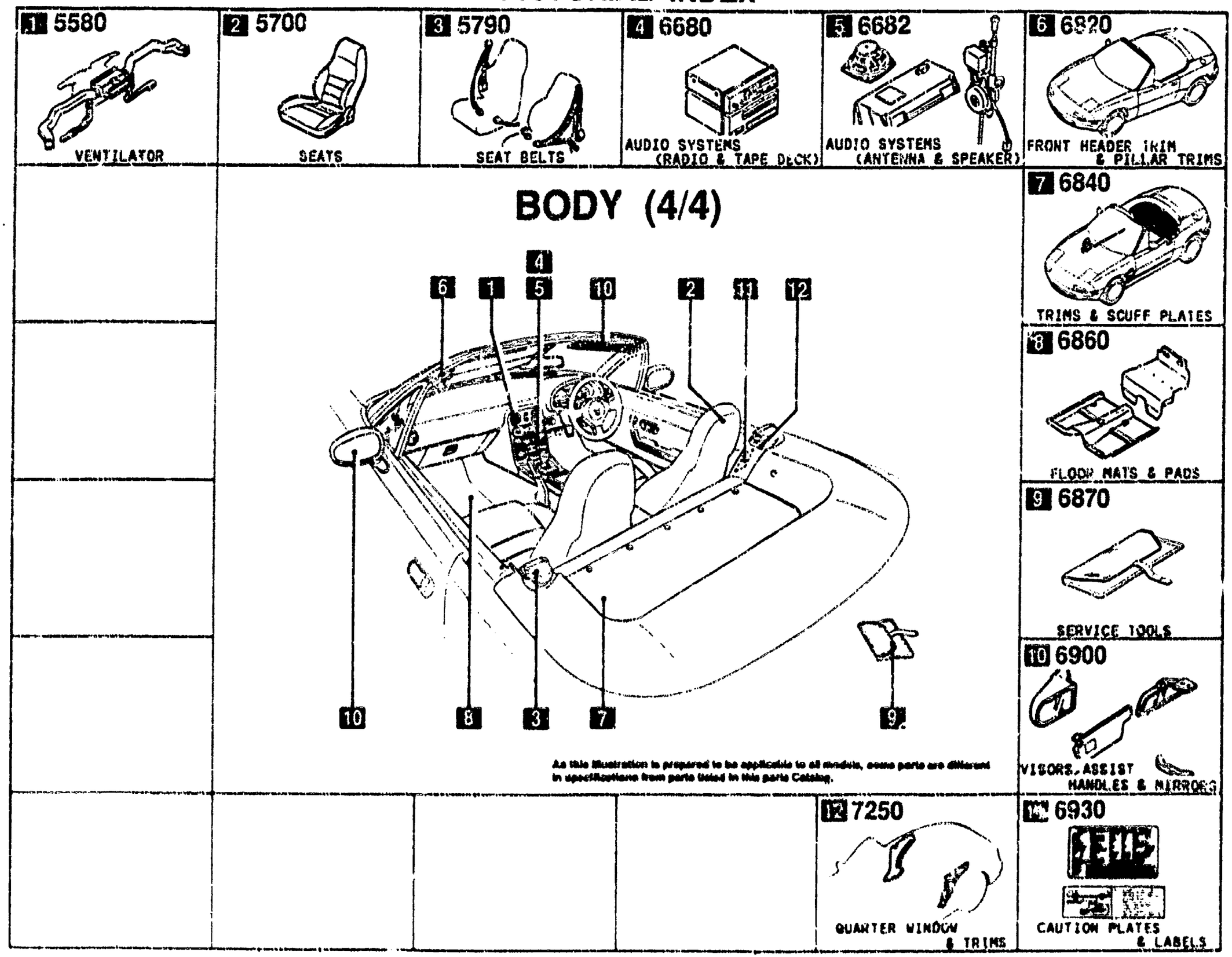

SECTION NAME INDEX (ENGINE)

LO.NO	SEC.NO	SECTION NAME	LO.NO	SEC.NO	SECTION NAME	LO.NO	SEC.NO	SECTION NAME
1-C03	1000	ENGINE & GASKET SETS	1-M09	1960	GASKET & SEAL KIT (AUTOMATIC)			
1-E03	1010	CYLINDER HEAD & COVER						
1-H03	1030	CYLINDER BLOCK						
1-I03	1040	OIL PAN & TIMING COVER						
1-K03	1100	PISTON,CRANKSHAFT & FLYWHEEL						
1-N03	1200	VALVE SYSTEM						
1-D04	1300	INLET MANIFOLD						
1-E04	1310	EXHAUST MANIFOLD						
1-F04	1320	FUEL SYSTEM						
1-H04	1325	FUEL DISTRIBUTOR						
1-I04	1330	AIR CLEANER						
1-K04	1364	THROTTLE BODY						
1-L04	1370	EMISSION CONTROL SYSTEM (INLET SIDE)						
1-N04	1400	OIL PUMP & FILTER						
1-D05	1500	COOLING SYSTEM						
1-G05	1580	BRACKET,PULLEY & BELT						
1-C06	1600	CLUTCH DISC & COVER (MANUAL)						
1-D06	1700	TRANSMISSION CASE (MANUAL)						
1-E06	171[illegible]	TRANSMISSION GEARS(MANUAL)						
1-J06	1720	CHANGE CONTROL SYSTEM (MANUAL)						
1-M06	1800	ENGINE ELECTRICAL SYSTEM						
1-C07	1830	ALTERNATOR						
1-E07	1840	STARTER (MT)						
1-G07	1840 A	STARTER (AT)						
1-I07	1850	BATTERY						
1-J07	1910	TORQUE CONVERTER,OIL PUMP & PIPINGS (AUTOMATIC)						
1-M07	1920	TRANSMISSION CASE & MAIN CONTROL SYSTEM (AUTOMATIC)						
1-F08	1925	CONTROL VALVE (AUTOMATIC)						
1-M08	1930	CLUTCHES & PLANETARY GEARS (AUTOMATIC)						
1-H09	1940	GOVERNOR, LOW & REVERSE PISTON (AUTOMATIC)						
1-K09	1950	MANUAL LINKAGE SYSTEM (AUTOMATIC)						

SECTION NAME INDEX (CHASSIS)

LO.NO	SEC.NO	SECTION NAME	LO.NO	SEC.NO	SECTION NAME	LO.NO	SEC.NO	SECTION NAME
1-C11	2505	REAR PROPELLER SHAFT	1-C15	4300A	BRAKE PEDALS (AUTOMATIC TRANSMISSION)			
1-D11	2550	REAR DRIVE SHAFT	1-E15	4340	BRAKE MASTER CYLINDER & POWER BRAKE (W/O ANTI LOCK BRAKE SYSTEM)			
1-E11	2600	REAR AXLE	1-G15	4340 A	BRAKE MASTER CYLINDER & POWER BRAKE (ANTI LOCK BRAKE SYSTEM)			
1-F11	2610	REAR BRAKE MECHANISMS	1-I15	4360	BRAKE PIPINGS (W/O ANTI LOCK BRAKE SYSTEM)			
1-H11	2710	REAR DIFFERENTIALS (NORMAL DIFF.)	1-K15	4360 A	BRAKE PIPINGS (ANTI LOCK BRAKE SYSTEM)			
1-L11	2710 A	REAR DIFFERENTIALS (LIMITED SLIP DIFF.)	1-N15	4370	ANTILOCK BRAKE SYSTEM			
1-C12	2800	REAR SUSPENSION MECHANISMS	1-C16	4400	PARKING BRAKE SYSTEM			
1-D12	2801	REAR SPRING & DAMPER	1-E16	4500	FUEL PIPINGS			
1-E12	2810	REAR STABILIZER	1-G16	4600	CHANGE CONTROL SYSTEM (AT)			
1-F12	2830	REAR LOWER ARMS & SUB FRAME						
1-H12	3200	STEERING WHEEL						
1-I12	3210	STEERING COLUMN & SHAFTS						
1-J12	3220	STEERING GEAR (W/O POWER STEERING)						
1-L12	3220 A	STEERING GEAR (W/ POWER STEERING)						
1-C13	3240	POWER STEERING SYSTEM						
1-E13	3300	FRONT AXLE (W/O ANTI LOCK BRAKE SYSTEM)						
1-F13	3300 A	FRONT AXLE (ANTI LOCK BRAKE SYSTEM)						
1-G13	3310	FRONT BRAKE MECHANISMS						
1-H13	3400	FRONT SUSPENSION MECHANISMS						
1-J13	3401	FRONT SPRING & DAMPER						
1-K13	3410	CROSSMEMBER & STABILIZER						
1-L13	3700	TIRES & JACK						
1-C14	3900	ENGINE & T/MISSION MOUNTINGS						
1-D14	4000	EXHAUST SYSTEM						
1-E14	4140	CLUTCH RELEASE & MASTER CYLINDERS (MANUAL TRANSMISSION)						
1-F14	4145	CLUTCH PIPINGS (MANUAL TRANSMISSION)						
1-G14	4160	ACCELERATOR CONTROL SYSTEM						
1-H14	4200	FUEL TANK						
1-K14	4210	FUEL LID OPENER						
1-L14	4300	CLUTCH & BRAKE PEDALS (MANUAL TRANSMISSION)						

SECTION NAME INDEX (BODY)

LO.NO	SEC.NO	SECTION NAME	LO.NO	SEC.NO	SECTION NAME	LO.NO	SEC.NO	SECTION NAME
2-C03	0900	KEY SETS	2-D11	6110	HEATER UNIT COMPONENTS	2-G16	6930	CAUTION PLATES & LABELS
2-E03	5000	FRONT BUMPER	2-E11	6115	HEATER CONTROLS COMPONENTS	2-I16	7250	QUARTER WINDOW & TRIMS
2-H03	5010	REAR BUMPER	2-F11	6120	HEATER BLOWER COMPONENTS			
2-J03	5030	WINDOW MOULDING & COWL GRILLES	2-G11	6130	AIR CONDITIONER			
2-K03	5100	HEAD LAMPS	2-K11	6140	COMPRESSOR COMPONENTS (AIR CONDITIONER)			
2-L03	5103	HEAD LAMP RETRACTORS	2-M11	6150	COOLING UNIT (AIR CONDITIONER)			
2-C04	5105	FRONT COMBINATION LAMPS	2-N11	6300	WINDOW GLASSES			
2-E04	5110	REAR COMBINATION LAMPS	2-C12	6330	SUNROOF			
2-H04	5120	LICENSE LAMPS	2-N12	6600	SWITCHES & RELAYS (ENGINE)			
2-I04	5170	ORNAMENTS	2-E13	6610	DASHBOARD SWITCHES			
2-J04	5180	REAR FINISHER	2-F13	6611	COMBINATION SWITCH			
2-K04	5230	BONNET	2-G13	6630	RELAYS & UNIT (BODY)			
2-M04	5260	TRUNK LID	2-I13	6635	DOOR SWITCH & HORNS			
2-N04	5310	FRONT PANELS	2-J13	6640	AUTO CRUISE CONTROL SYSTEM			
2-C05	5320	FENDER & WHEEL APRON PANELS	2-K13	6680	AUDIO SYSTEMS (RADIO & TAPE DECK)			
2-E05	5330	DASH & COWL PANELS	2-D14	6682	AUDIO SYSTEMS (ANTENNA & SPEAKER)			
2-F05	5340	SIDE PANELS	2-G14	6700	WIRING HARNESSES(FRONT & REAR)			
2-K05	5370	FLOOR PANELS	2-I14	6701	WIRING HARNESSES(ENGINE & T/MISSION)			
2-N05	5380	FLOOR ATTACHMENTS (HOLE COVERS)	2-J14	6702	WIRING HARNESSES(DASHBOARD)			
2-C06	5390	FLOOR ATTACHMENTS	2-K14	6703	WIRING HARNESSES(DOOR,FLOOR/CEILING)			
2-C07	5500	DASHBOARD EQUIPMENTS	2-L14	6704	WIRING HARNESS CLAMPS			
2-E07	5520	METER HOOD	2-C15	6720	WINDSHIELD WASHER (W/O ANTI LOCK BRAKE SYSTEM)			
2-F07	5530	SPEEDOMETER CABLE	2-E15	6720 A	WINDSHIELD WASHER (ANTI LOCK BRAKE SYSTEM)			
2-G07	5540	METER COMPONENTS	2-H15	6730	WINDSHIELD WIPERS			
2-I07	5560	DASHBOARD & RELATED PARTS	2-J15	6740	WIPER MOTOR COMPONENTS(FRONT)			
2-L07	5570	CONSOLE	2-K15	6820	FRONT HEADER TRIM & PILLAR TRIMS			
2-C08	5600	VENTILATOR	2-L15	6840	TRIMS & SCUFF PLATES			
2-E08	5700	SEATS	2-N15	6860	FLOOR MATS & PADS			
2-E09	5790	SEAT BELTS	2-D16	6870	SERVICE TOOLS			
2-G09	5795	AIR BAG	2-E16	6900	VISORS,ASSIST HANDLES & MIRRORS			
2-J09	5800	FRONT DOORS						
2-M09	5830	FRONT DOOR MECHANISMS						
2-E10	5840	FRONT DOOR TRIMS & RELATED PARTS						
2-C11	6100	HEATER						

0900 KEY SETS

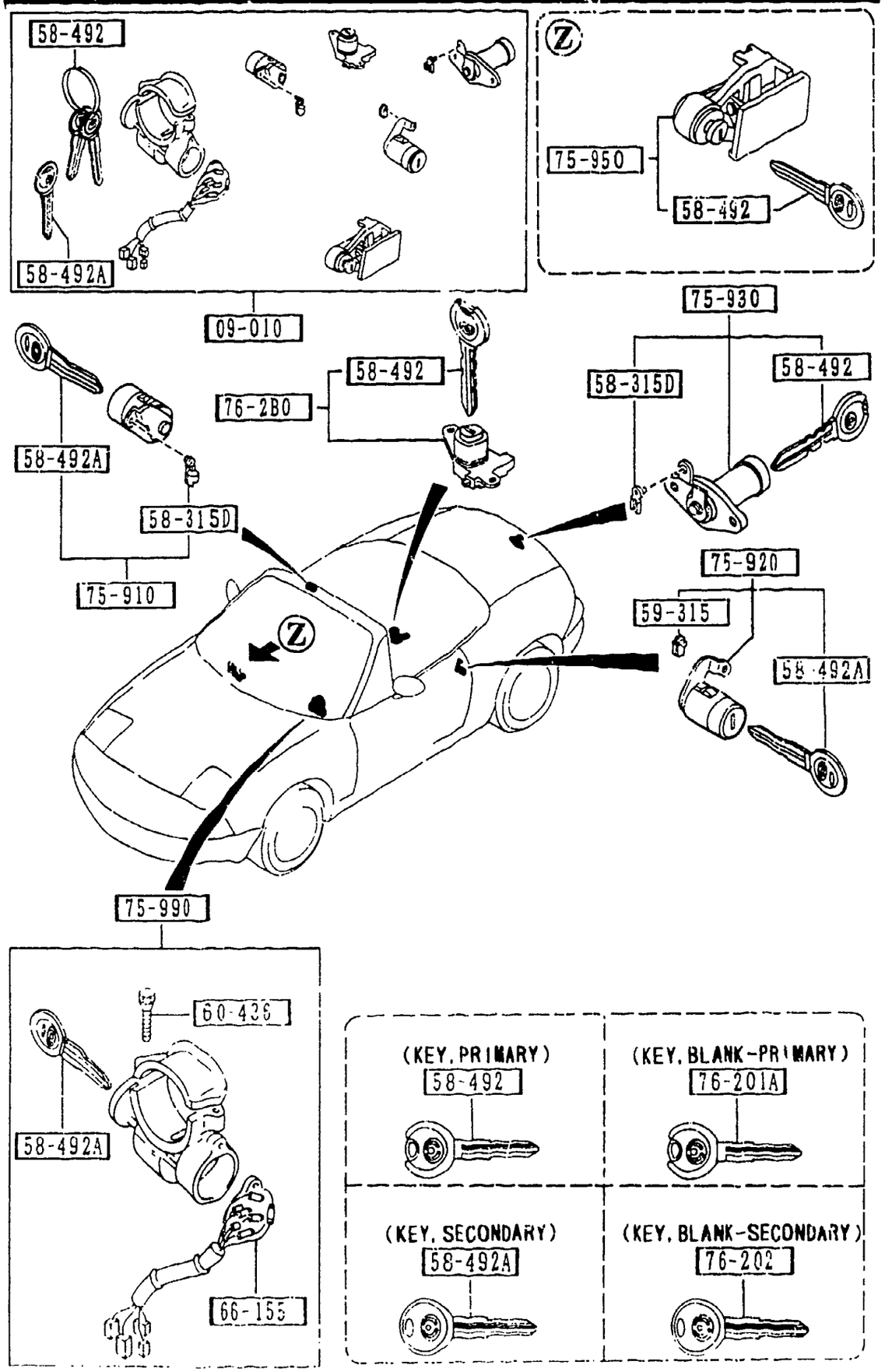

PART NO.	QTY	MODEL/RESTRICTION	MODEL/RESTRICTION	MODEL/RESTRICTION	FROM-TO
+---------+					
| 09-010 |		KEY SET			
+---------+					
NA75-09-010C	1	(MT)			-4201
00	INT-	NA3 NA4 NA5 BLACK			
88	INT-	NA4 NA5 TAN			
NA82-09-010A	1	(AT)			-4201
00	INT-	NA3 NA4 NA5 BLACK			
88	INT-	NA4 NA5 TAN			
NA75-09-010D	1	(MT)			4201-
00	INT-	NA3 NA4 NA5 BLACK			
NA82-09-010B	1	(AT)			4201-
00	INT-	NA3 NA4 NA5 BLACK			
+---------+					
| 58-315D |		CLIP (R)			
+---------+					
G030-58-315	2				
+---------+					
| 58-492 |		KEY,PRIMARY			
+---------+					
FD01-58-492	2	KEY NO IS REQUIRED			
+---------+					
| 58-492A |		KEY,SECONDARY			
+---------+					
FD01-58-493	1	KEY NO.IS REQUIRED			
+---------+					
| 59-315 |		CLIP			
+---------+					
G030-59-315	1				
+---------+					
| 60-436 |		BOLT,SET			
+---------+					
H043-66-154	1				
+---------+					
| 66-155 |		SWITCH,IGNITION			
+---------+					
D001-66-151	1				
+---------+					
| 75-910 |		KEY SUB SET(R),DOOR			
+---------+					
NA14-76-210F	1				
+---------+					
| 75-920 |		KEY SUB SET(L),DOOR			
+---------+					
NA14-76-220F	1				
+---------+					
| 75-930 |		KEY SUB SET,TRUNK			
+---------+					
NA01-76-230C	1				

4201 NA3***-511601

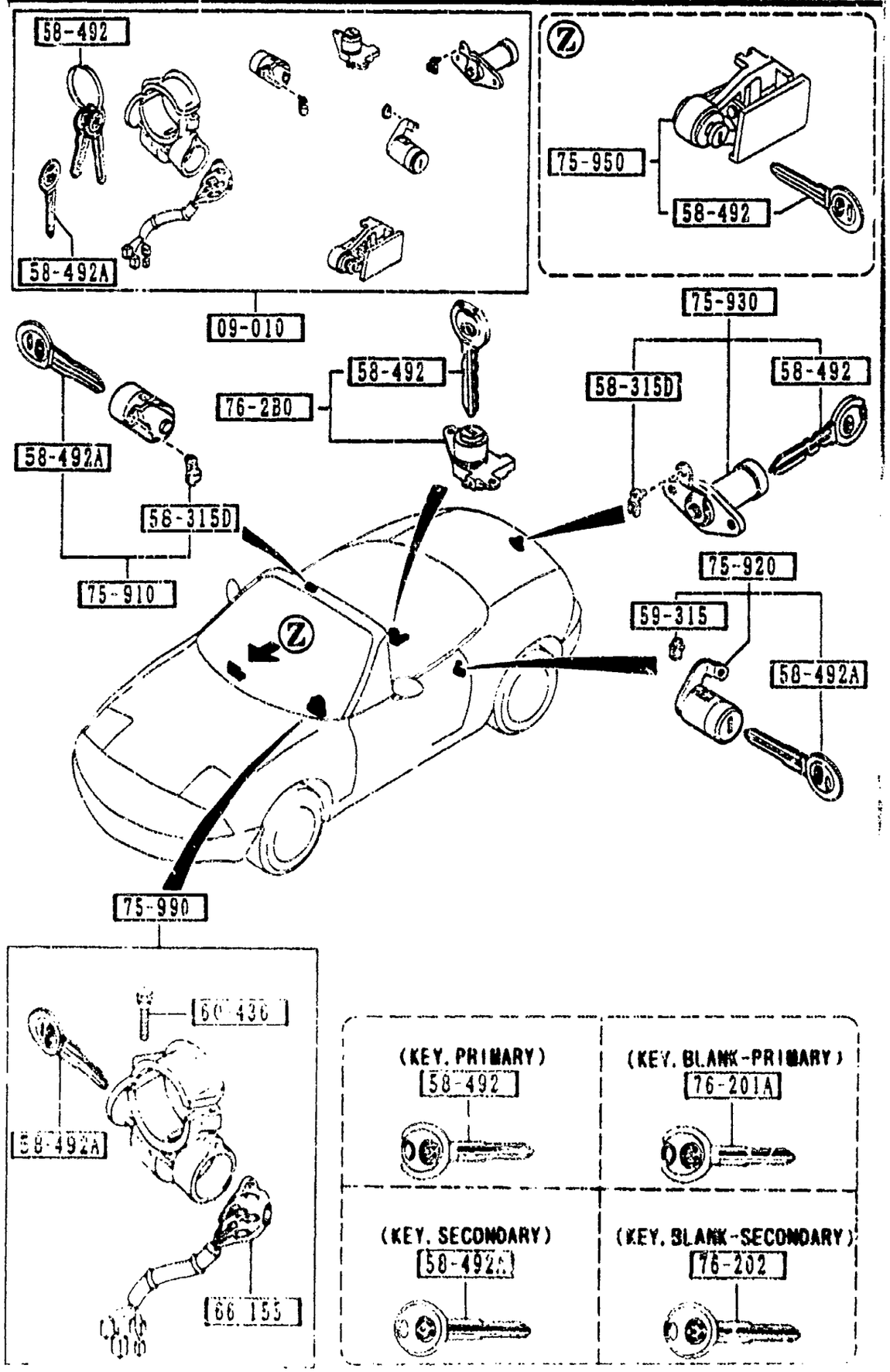

PART NO.	QTY	MODEL/RESTRICTION	MODEL/RESTRICTION	MODEL/RESTRICTION	FROM-TO
75-950		KEY SUB SET,GLOVE			
NA75-76-250	1				
75-990		KEY SUB SET,ST.LOCK			
NA75-76-290	1	(MT)			
NAB1-76-290	1	(AT)			
76-2B0		KEY SUB SET,CONSOLE			
NA01-76-2B0C	1				
76-201A		KEY,BLANK-PRIMARY			
FD01-76-201	1				
76-202		KEY,BLANK-SECONDARY			
FD01-76-202	1				

5000 FRONT BUMPER

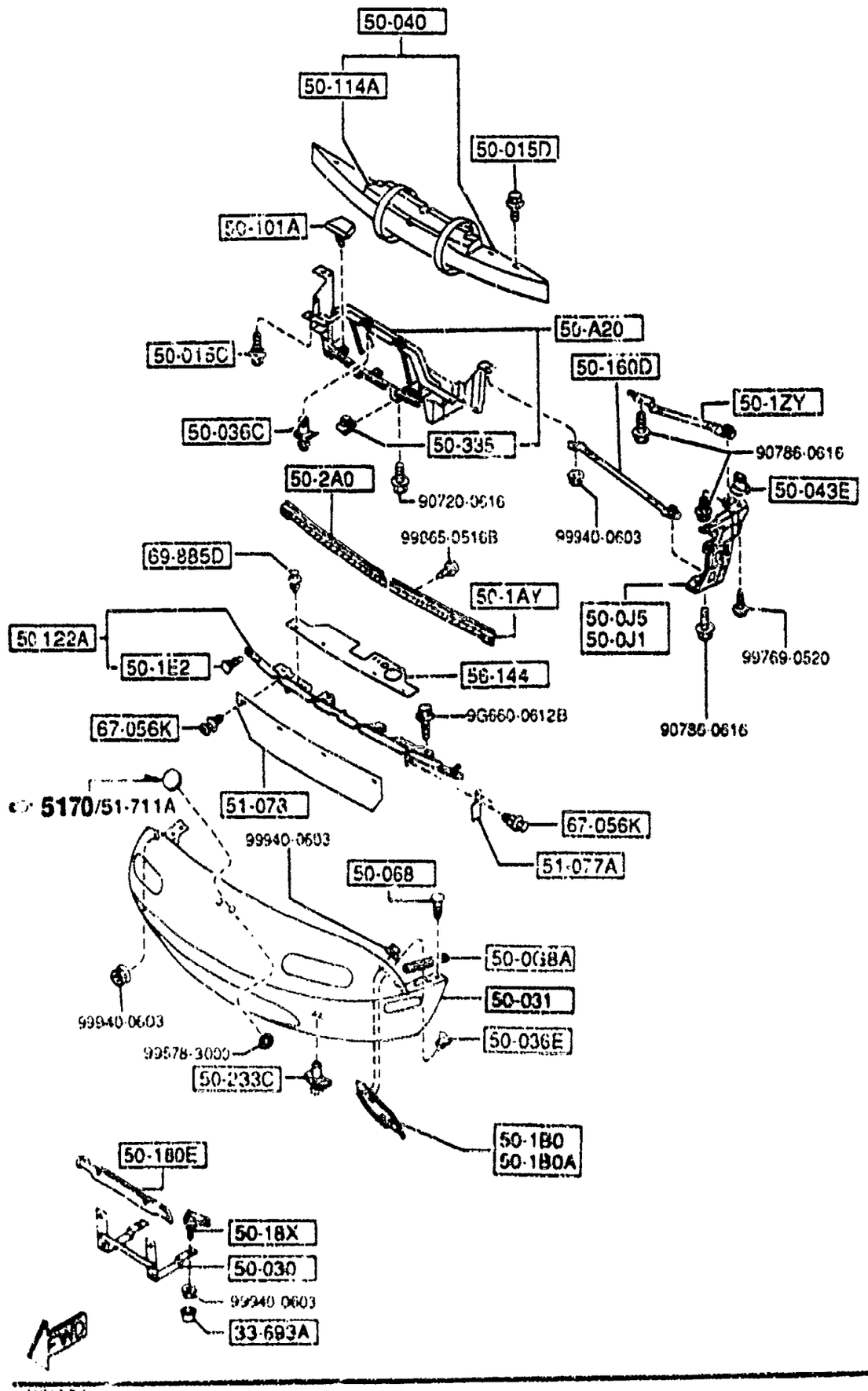

PART NO.	QTY	MODEL/RESTRICTION	MODEL/RESTRICTION	MODEL/RESTRICTION	FROM-TO
33-693A		CAP,BLEEDER SCREW			
0259-33-693	2				
50-A20		GUIDE,AIR			
NA01-50-A20A	1	(W/O A.LOCK BRAKE)			
NA23-50-A20	1	(A.LOCK BRAKE)			
50-0G8A		SEAL,RUBBER-FRONT BUMPER			
NA01-50-0G9	2				
50-0J1		RETAINER(R),FRONT BUMPER			
NA01-50-0J1	1				
50-0J5		RETAINER(L),FRONT BUMPER			
NA01-50-0J5	1				
50-015C		BOLT			
FB01-50-132	2				
50-015D		BOLT			
NA01-50-0Z2	8				
50-030		HOLDER,NO. PLATE			
NA01-50-180A	1				
50-031		BUMPER,FRONT			
NAV1-50-030	1	PAINT TO MATCH			
50-036C		FASTENER			
BF67-50-033	2				
50-036E		CLIP			
KA01-50-1G2	6				
50-040		REINFORCEMENT,BUMPER			
NA01-50-070	1	(W/O DAY RUNNING LAMP)			
50-043E		SLIDE'A',BUMPER			
B092-50-052	2				

5000 FRONT BUMPER

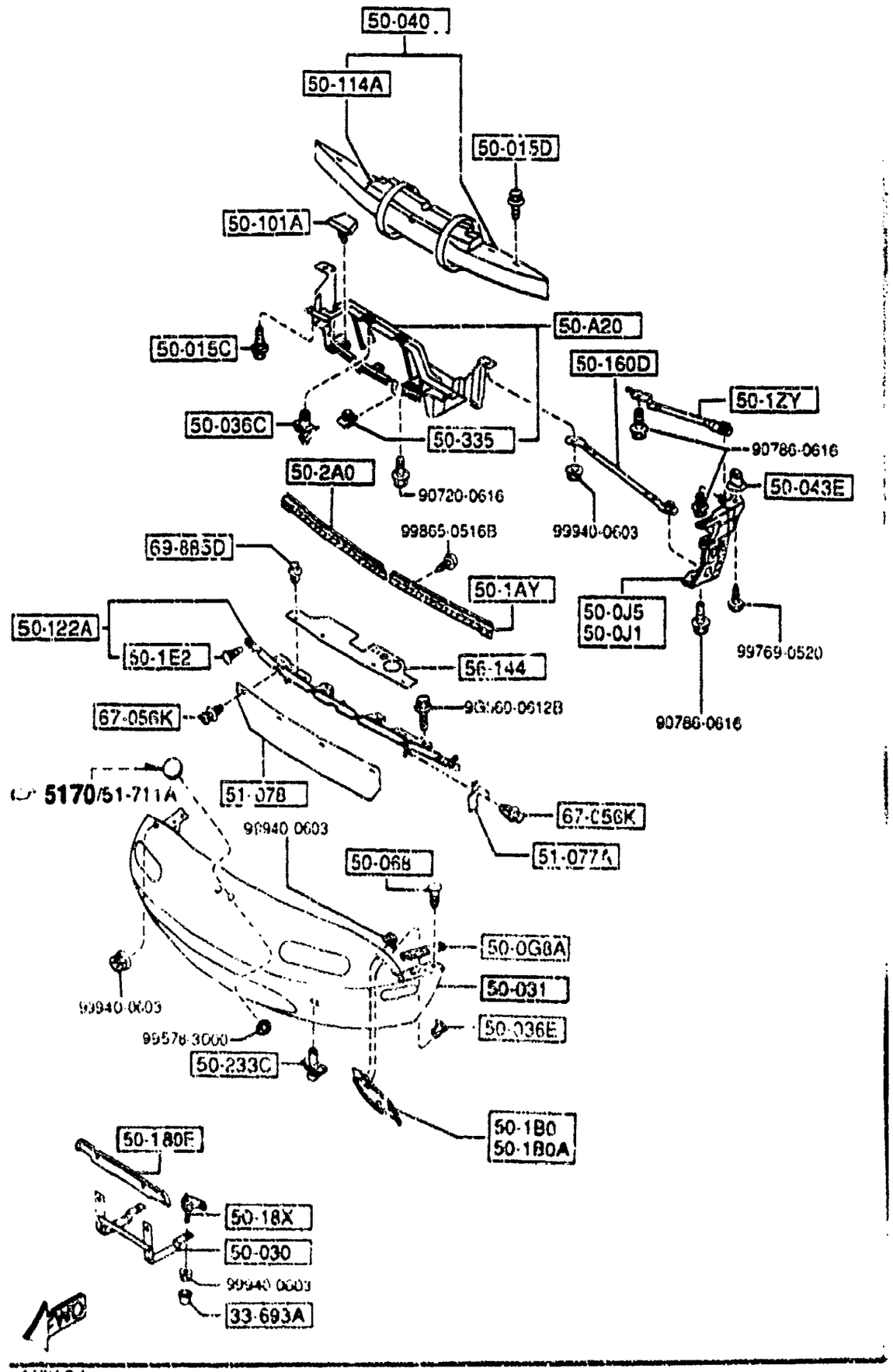

PART NO.	QTY	MODEL/RESTRICTION	MODEL/RESTRICTION	MODEL/RESTRICTION	FROM-TO
50-068		CLIP			
NA01-50-068	6				
50-1AY		PLATE,SET NO.1			
NA01-50-1AYC	1				
50-1B0		PLATE NO.2(R),SET-F. BUMPER			
NA01-50-1B0	1				
50-1B0A		PLATE NO.2(L),SET-F. BUMPER			
NA01-50-1C0	1				
50-1E2		BOLT			
NA01-50-1E2	2				
50-1ZY		BRACKET,FENDER			
NA01-50-1ZY	2				-4601
AN(NA01-50-1ZYB)					
*NA01-50-1ZYB	2				4601-
50-101A		COVER,GRILLE			
NA01-50-101A	3				
50-114A		SPACER,E.A.FOAM			
NA01-50-114	1				
50-122A		RETAINER,FRT.BUMPER			
NA75-50-0K0	1				
50-160D		BRACKET(L),F. BUMPER SIDE			
NA01-50-160	1	(A.LOCK BRAKE)			
NA01-50-160	2	(W/O A.LOCK BRAKE)			
50-18X		BRACKET,LICENCE PLATE			
NA01-50-18X	2				
50-180E		PROTECTOR,NO. PLATE			
FB01-50-144	1				
50-2A0		SET PLATE NO.1(R),RR BUMPER			
NA01-50-2A0	1				

4601 NA3###-519089

5000 -3 * FRONT BUMPER

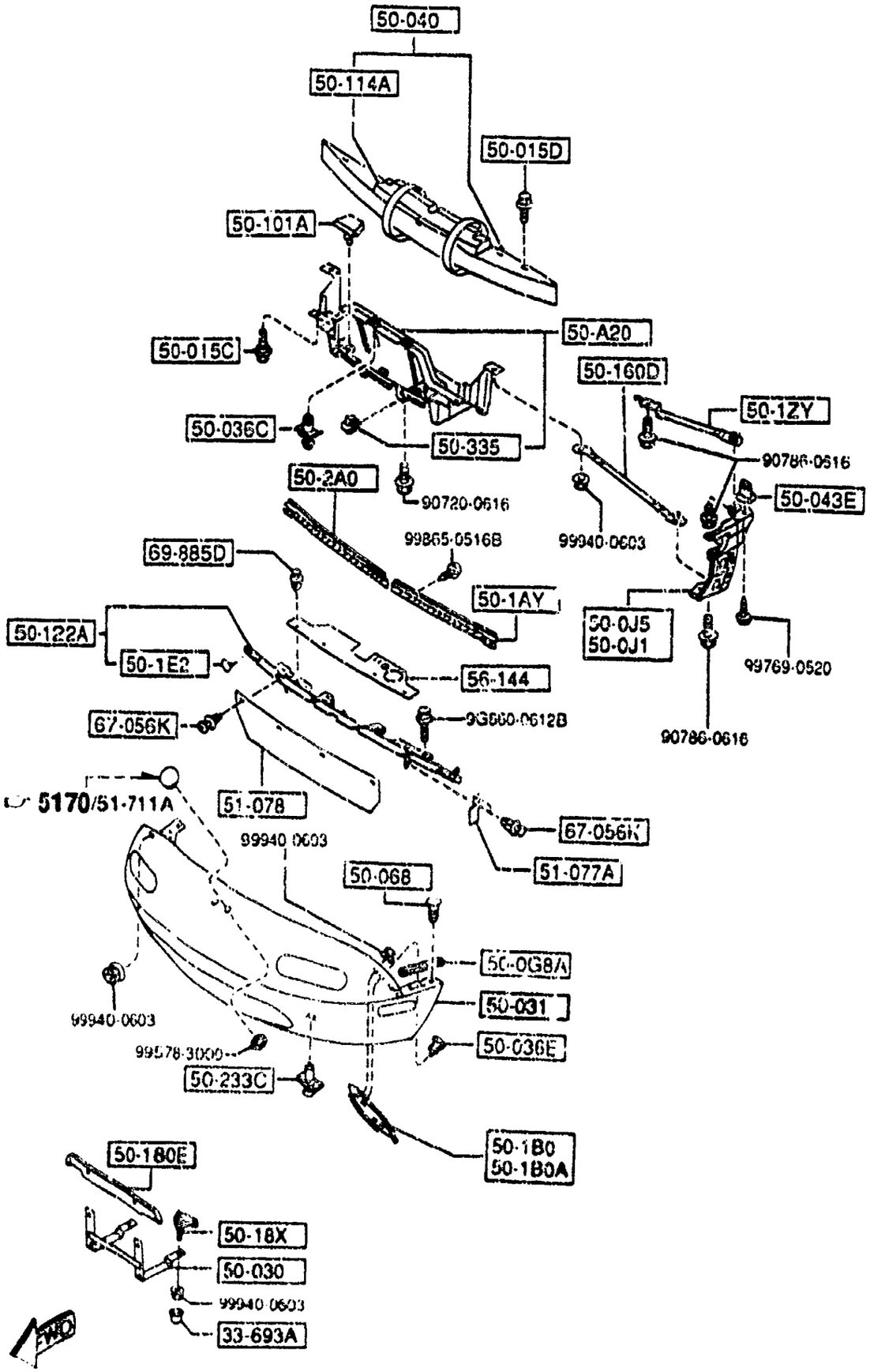

PART NO.	QTY	MODEL/RESTRICTION	MODEL/RESTRICTION	MODEL/RESTRICTION	FROM-TO
50-233C BF82-50-233	2	FASTENER,REAR BUMPER			
50-335 FB01-50-133C	4	NUT,CLIP			
51-077A NA75-50-0K8	2	SEAL,SIDE			
51-078 NA75-50-0K6A	1	SEAL,LOWER			
56-144 NA75-50-0K7A	1	SEAL,BUMPER			
67-056K UB39-50-795	8	RIVET			
69-885D NA01-56-145	4	FASTENER			

5010 REAR BUMPER

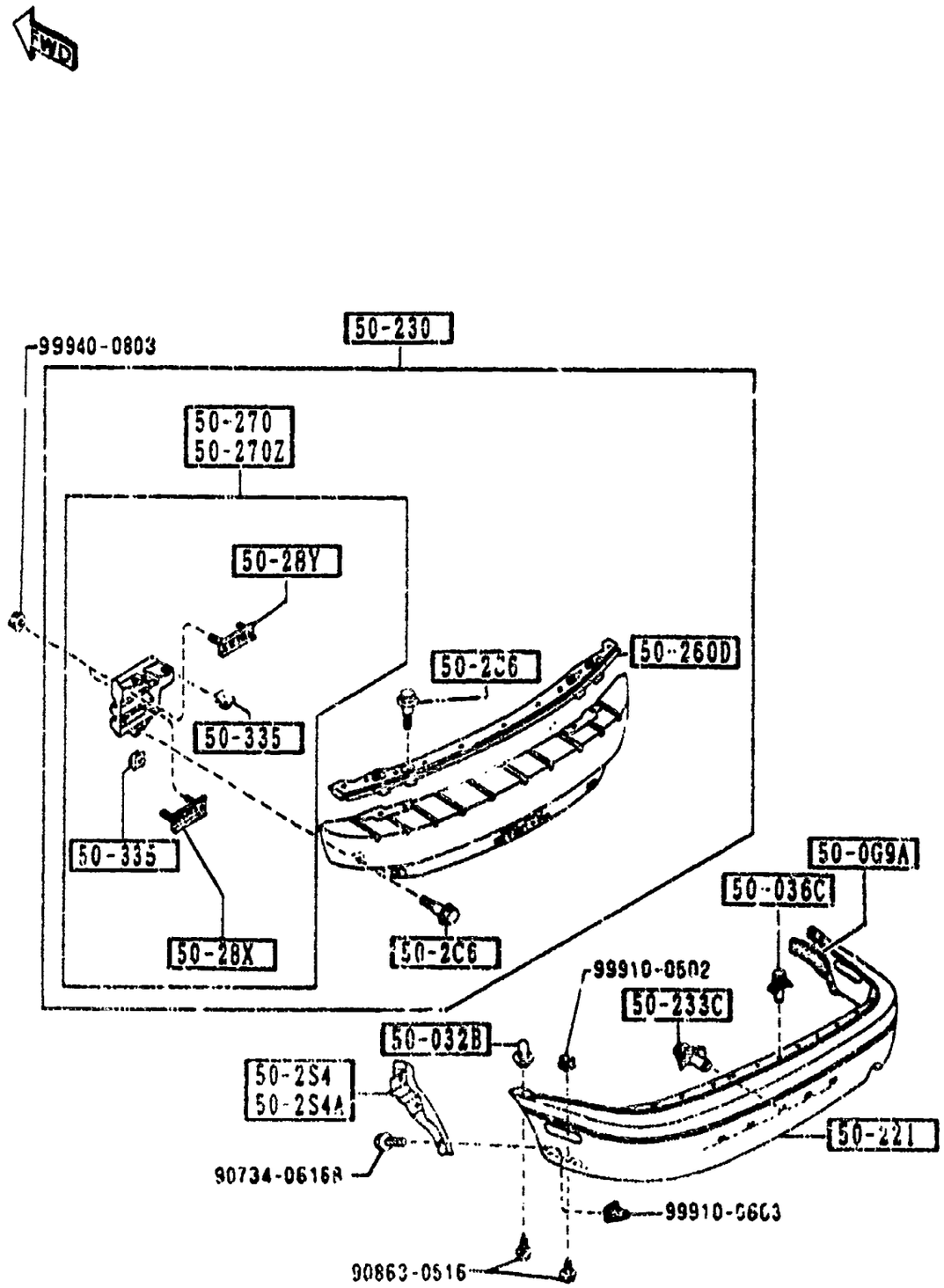

PART NO.	QTY	MODEL/RESTRICTION	MODEL/RESTRICTION	MODEL/RESTRICTION	FROM-TO
50-0G9A NA01-50-0G8	2	SEAL,RUBBER-REAR BUMPER			
50-032B GJ21-50-032	2	SLIDE'UP.',BUMPER			
50-036C BF67-50-033	11	FASTENER			
50-2C6 NA01-50-2C6	6	BOLT			
50-2S4 NA01-50-2S4	1	SHIELD(R),SPLASH-R.BUMPER			
50-2S4A NA01-50-2S5	1	SHIELD(L),SPLASH-R.BUMPER			
50-221 NA01-50-220A	1	BUMPER,REAR PAINT TO MATCH			
50-230 NA01-50-260	1	REINFORCEMENT,BUMPER (W/O DAY RUNNING LAMP)			
50-233C BF82-50-233	5	FASTENER,REAR BUMPER			
50-260D NA01-50-2J0	1	RETAINER,R.BUMPER			
50-270 NA01-50-280A	1	STAY(R),RR. BUMPER			
50-270Z NA01-50-290A	1	STAY(L),RR. BUMPER			
50-28X NA01-50-28X0	2	PLATE SET			

5010 REAR BUMPER

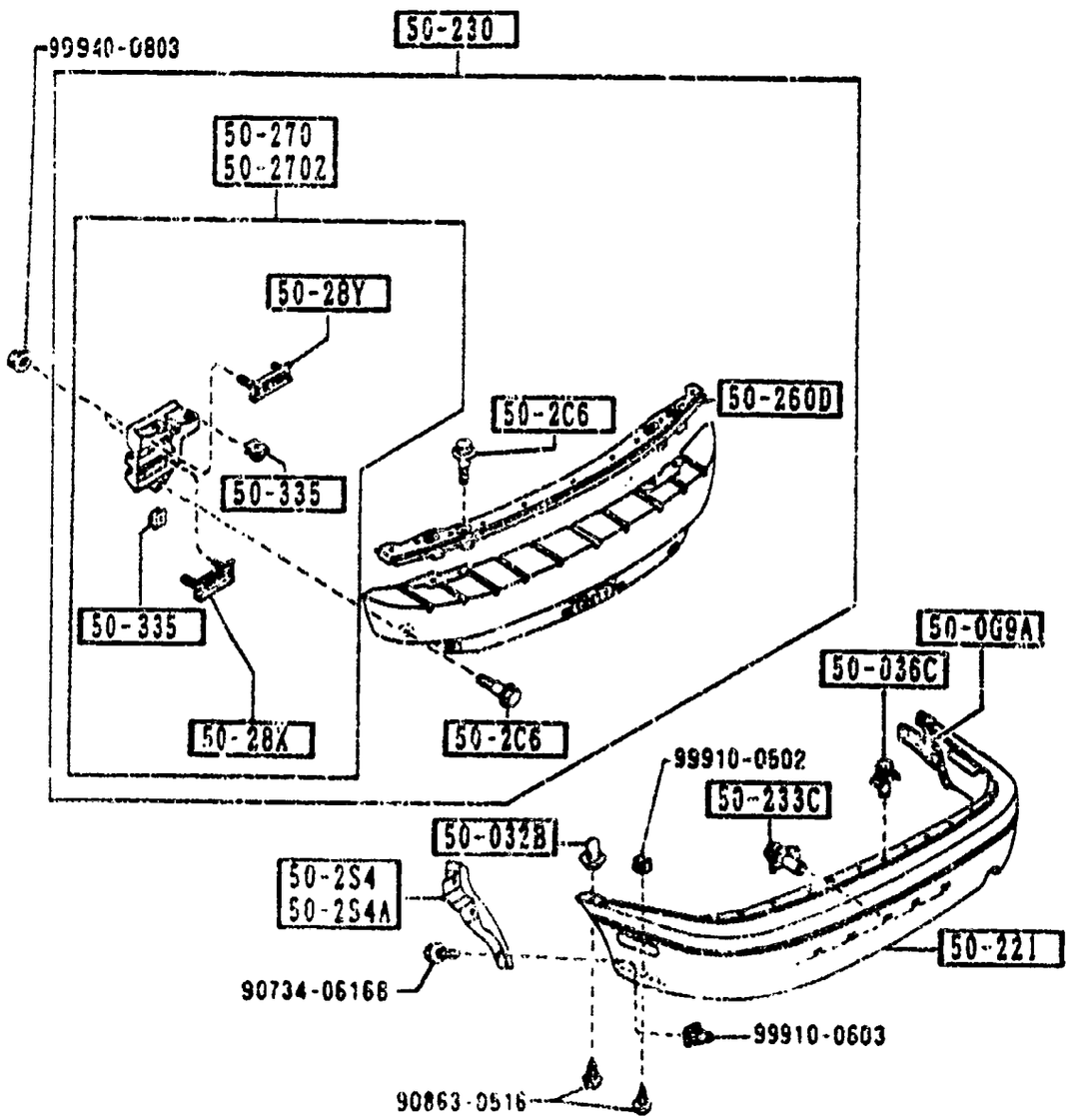

PART NO.	QTY	MODEL/RESTRICTION	MODEL/RESTRICTION	MODEL/RESTRICTION	FROM-TO
50-28Y		PLATE SET			
NA01-50-28YC	2				
50-335		NUT,CLIP			
NA01-50-133	6				

5030 WINDOW MOULDING & COWL GRILLES

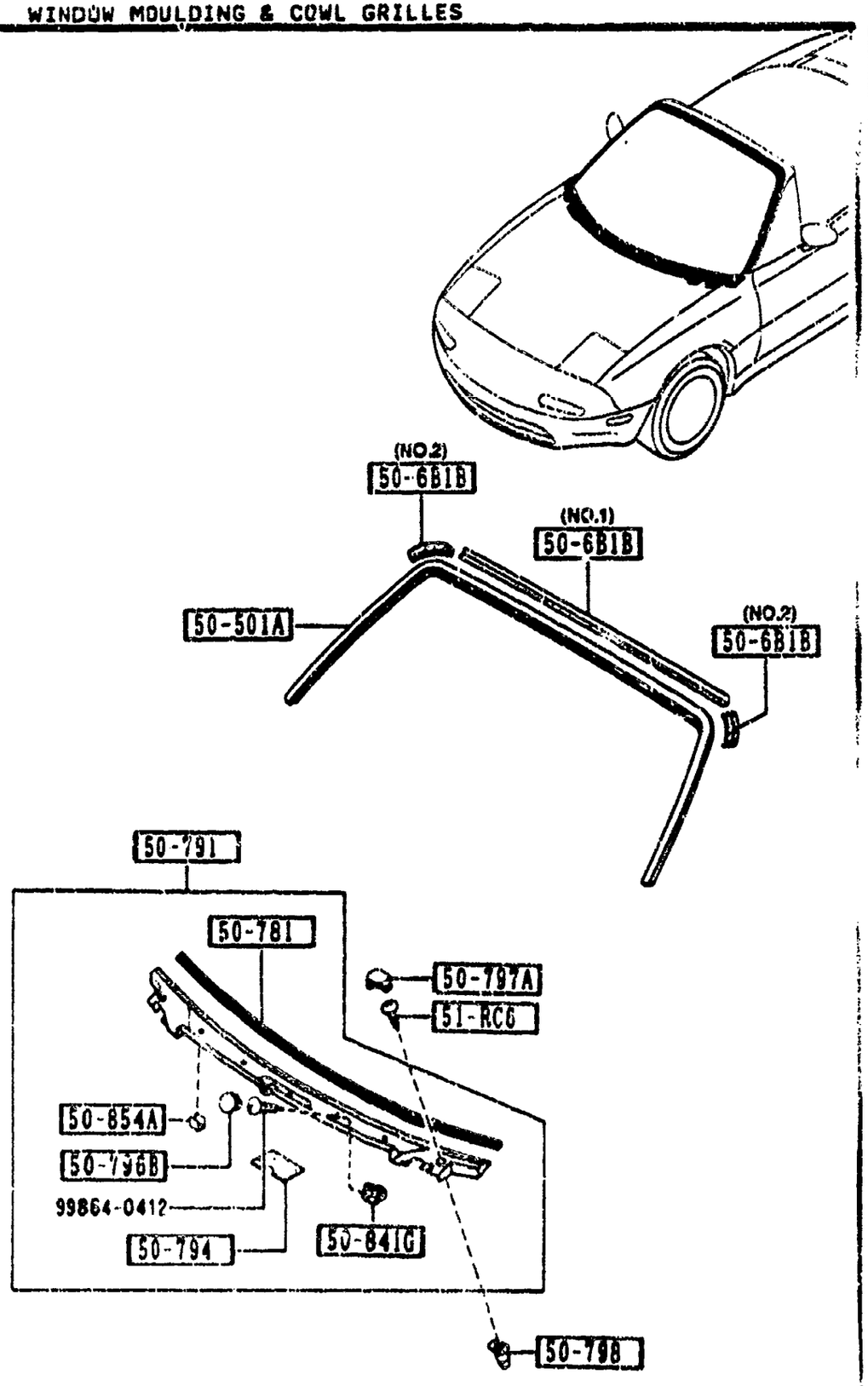

PART NO.	QTY	MODEL/RESTRICTION	MODEL/RESTRICTION	MODEL/RESTRICTION	FROM-TO
50-501A		MOULD(UP),FRT.WINDOW			
NAV1-50-601	1				
50-6B1B		PROTR,MOULD-FRT WINDOW			
NA01-50-6B1	1	(ILLUST. NO.1)			
NA01-59-6B2	2	(ILLUST. NO.2)			
50-781		PROTECTOR,COWL GRILLE			
NA01-50-792A	1				
50-791		GRILLE,COWL			
NA01-50-790E	1				
50-794		PROTECTOR			
NA01-50-788	1				-3C01
50-796B		CAP			
B455-50-796A	5				
50-797A		CAP			
NA01-51-797A	2				
50-798		SCREW,GROMMET			
NA01-50-798	2				
50-841G		GROMMET,SCREW			
NA01-51-789	5				
50-854A		PROTECTOR			
NA01-50-794	4				
51-RC6		SCREW,SIDE GARNNISH			
H272-51-RC6	2				

3C01 NA3###-507607

5100 HEAD LAMPS

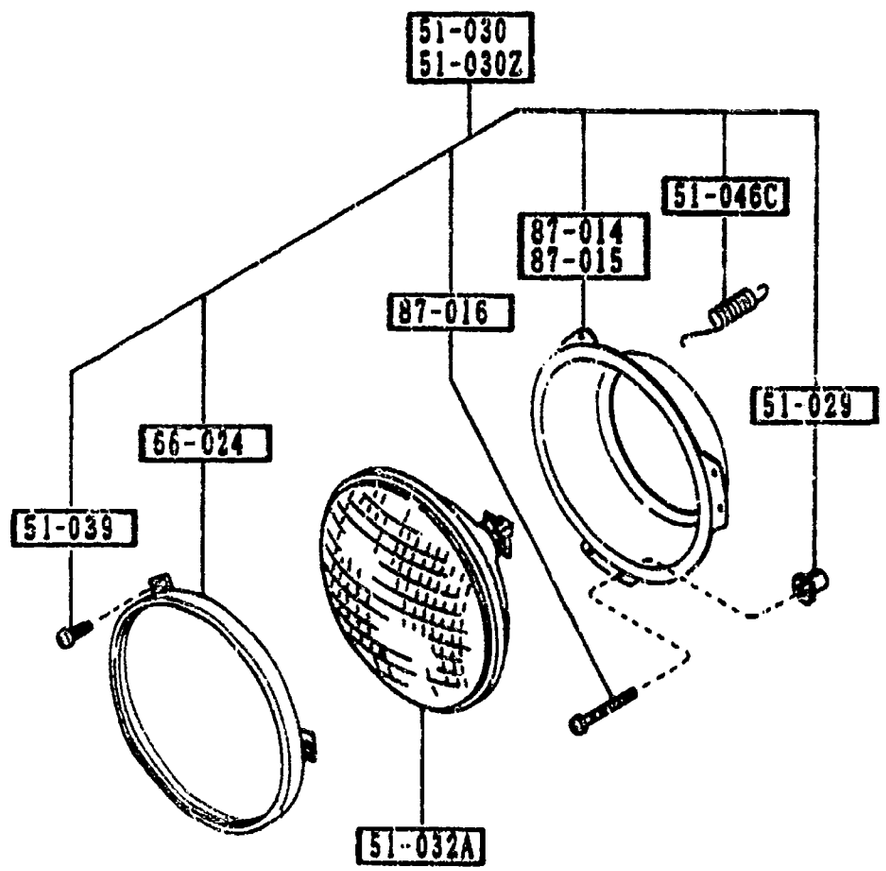

PART NO.	QTY	MODEL/RESTRICTION	MODEL/RESTRICTION	MODEL/RESTRICTION	FROM-TO
51-029		GROMMET,SCREW			
0483-66-061A	4				
51-030		LAMP SET(R),HEAD			
8BN1-51-030	1				
51-030Z		LAMP SET(L),HEAD			
8BN1-51-040	1				
51-032A		UNIT,HEAD LAMP			
NA02-51-031	2				
51-039		SCREW			
8481-51-0E3	6				
51-046C		SPRING			
NA01-51-046	2				
66-024		RING,RETAINING			
NA01-51-033	2				-4110
AN(NA01-51-033A)					
NA01-51-033A	2				4110-
87-014		RING(R)MOUNTING			
NA01-51-032	1				
87-015		RING(L)MOUNTING			
NA01-51-034	1				
87-016		SCREW,ADJUST			
NA01-51-037	4				

4110 NA3###-509641

5103 HEAD LAMP RETRACTORS

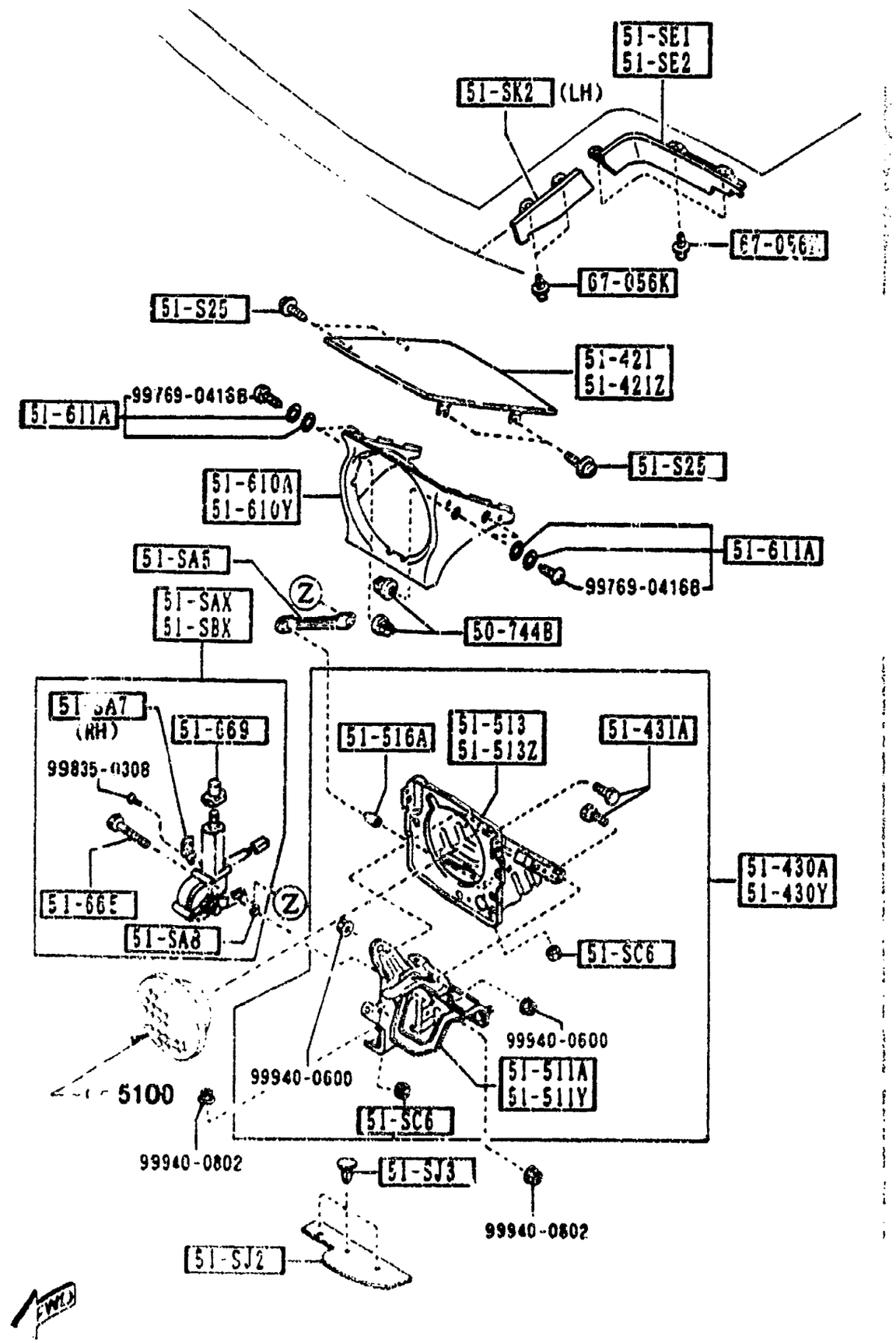

PART NO.	QTY	MODEL/RESTRICTION	MODEL/RESTRICTION	MODEL/RESTRICTION	FROM-TO
50-744B B481-50-744	8	GROMMET,SCREW			
51-SAX NA01-51-SAX	1	MOTOR(R),RETRACTABLE HEAD			
51-SA5 NA01-51-SA5	2	ROD,RETRACTABLE			
51-SA7 NA01-51-SA7	1	BRACKET,CLIP			
51-SA8 NA01-51-SA8	6	WASHER			
51-SBX NA01-51-SBX	1	MOTOR(L),RETRACTABLE HEAD			
51-SC6 KA01-51-SC6	4	NUT,STOPPER-LAMP HINGE			
51-SE1 NA01-51-SE1	1	PROTECTOR(R),RETRA H/L			
51-SE2 NA01-51-SE2	1	PROTECTOR(L),RETRA. H/L			
51-SJ2 NA01-51-SJ2	2	PROTECTOR(L),RETRA. FRONT (IN SPITE OF (L),THIS PART IS APPLICABLE TO BOTH RH&LH SIDE)			
51-SJ3 NAC1-51-SJ3	6	CLIP			
51-SK2 NA01-51-SK2	1	PROTECTOR(L),RETRA. SIDE			
51-S25 BS34-51-S25A	8	BOLT,LAMP LID			

5103 HEAD LAMP RETRACTORS

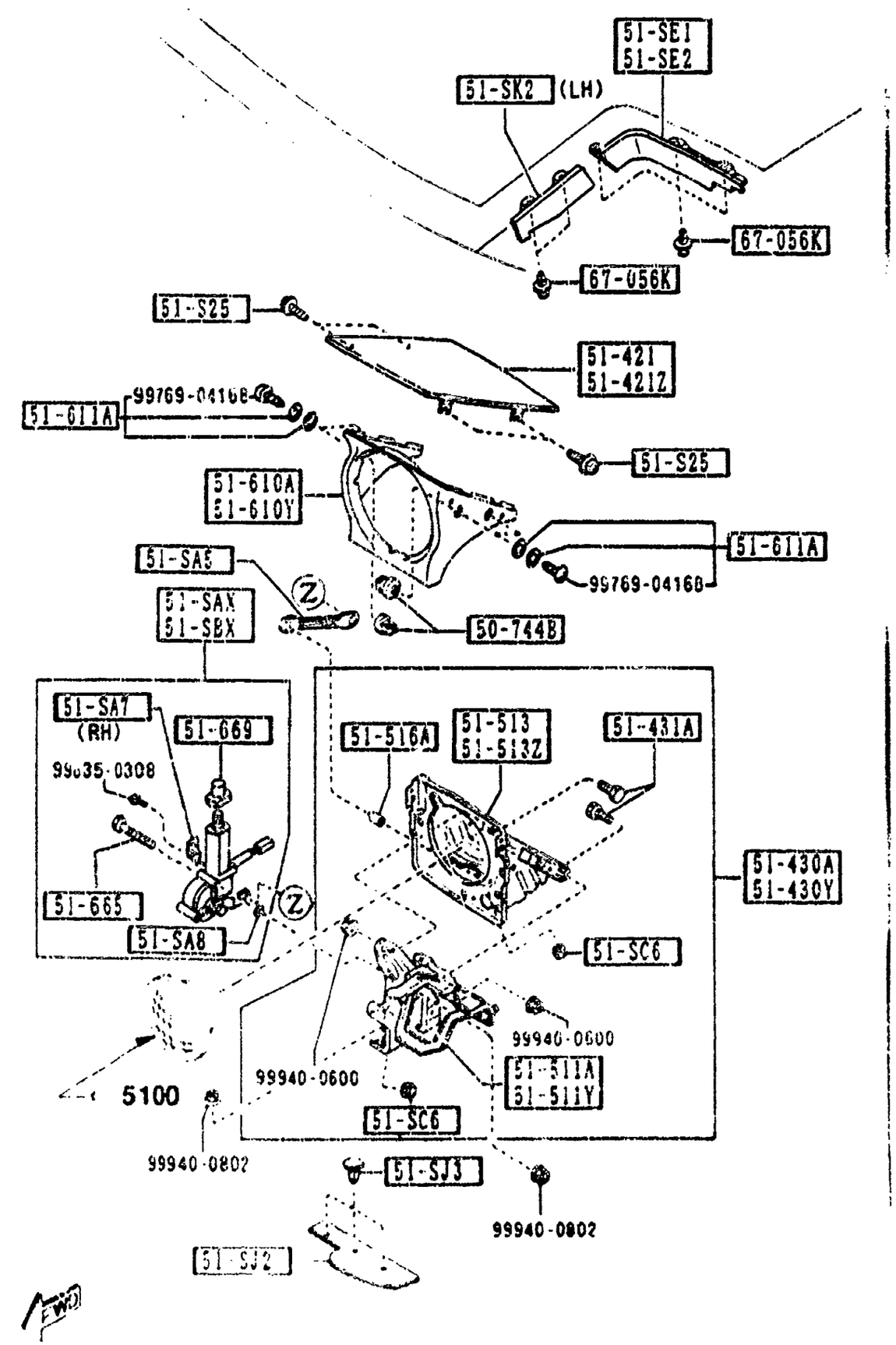

PART NO.	QTY	MODEL/RESTRICTION	MODEL/RESTRICTION	MODEL/RESTRICTION	FROM-TO
51-421 NA01-51-SH1B	1	LID(R),LAMP			
51-421Z NA01-51-SH2B	1	LID(L),LAMP			
51-430A NA01-51-SC0B	1	HINGE(R),LID-LAMP			
51-430Y NA01-51-SD0B	1	HINGE(L),LID-LAMP			
51-431A KA01-51-SD7	4	BOLT,HINGE			
51-511A NA01-51-SC1A	1	BRACKET(R),HINGE-LAMP LID			
51-511Y NA01-51-SD1A	1	BRACKET(L),HINGE-LAMP LID			
51-513 NA01-51-SC5B	1	HOUSING(R),LAMP-LID HINGE			
51-513Z NA01-51-SD5B	1	HOUSING(L),LAMP-LID HINGE			
51-516A KA01-51 SD6	2	CAP,HINGE-H.L RETRACTABLE			
51-610A NA01-50-741	1	BEZEL(R),HEAD LAMP			
51-610Y NA01-50-751	1	BEZEL(L),HEAD LAMP			
51-611A B481-50-75X	8	SCREW,HEAD LAMP BEZEL			
51-665 FB01-51-665	6	BOLT,MOTOR-RETRACT H/LAMP			

5103 HEAD LAMP RETRACTORS

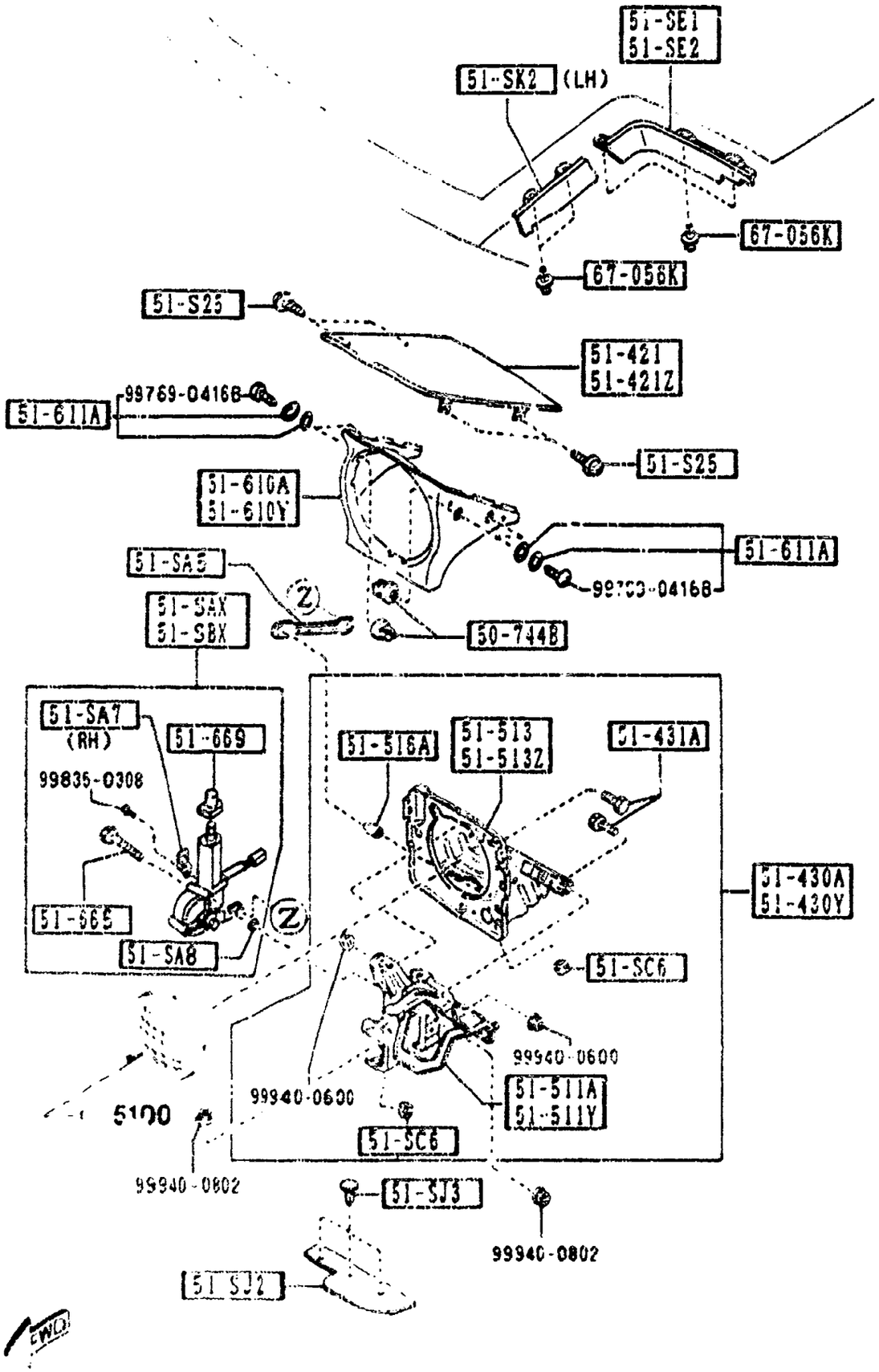

PART NO	QTY	MODEL/RESTRICTION	MODEL/RESTRICTION	MODEL/RESTRICTION	FROM-TO
51-669		BOOT,MOTOR-RETRACT H /L			
NA01-51-669	2				
67-056K		RIVET			
UB39-50-795	8				

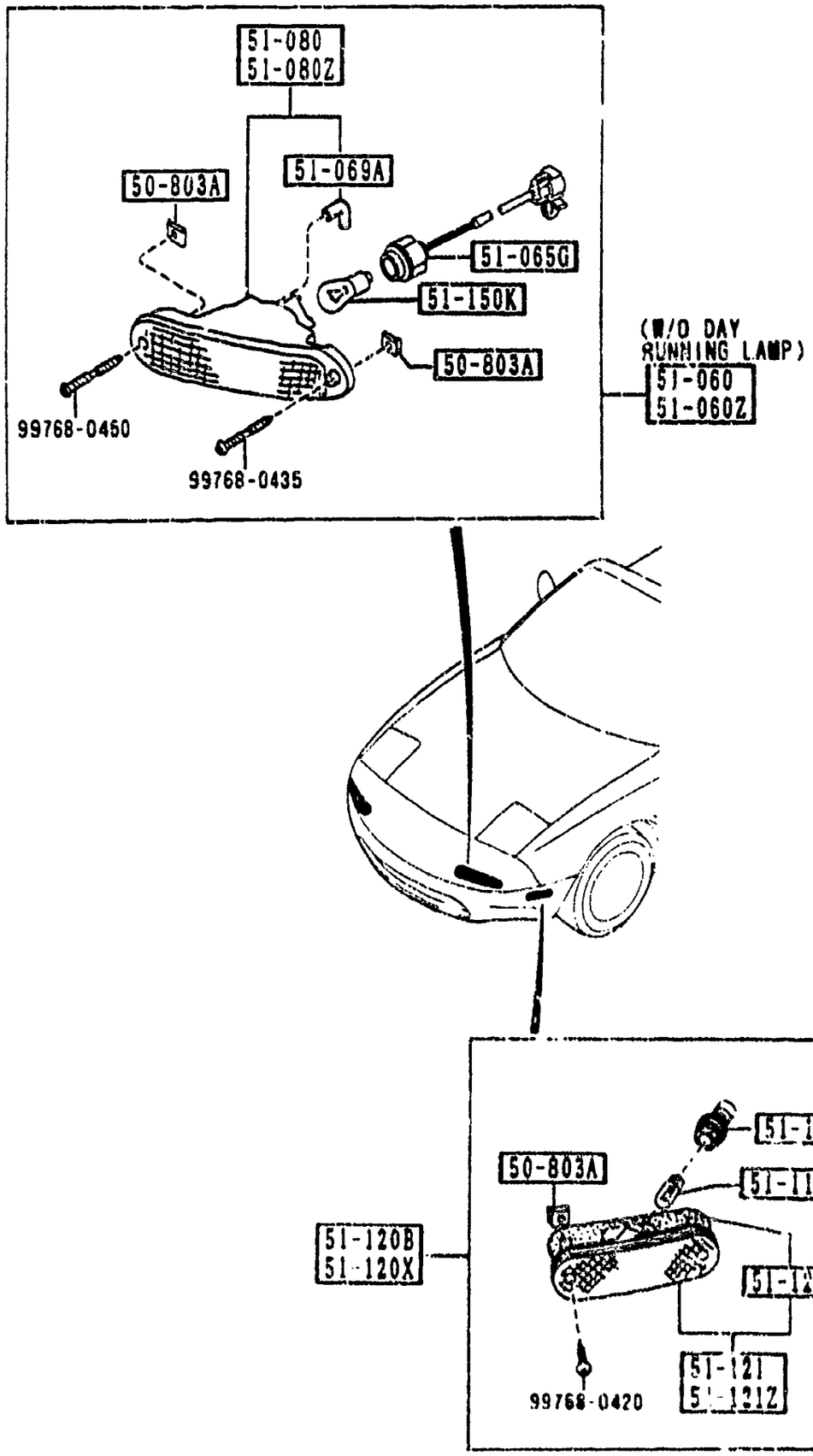

PART NO.	QTY	MODEL/RESTRICTION	MODEL/RESTRICTION	MODEL/RESTRICTION	FROM-TO
50-803A G158-50-803	8	NUT,SIDE PROTECTOR			
51-060 8BN1-51-060	1	LAMP SET(R),FRT COMB (W/O DAY RUNNING LAMP)			
51-060Z 8BN1-51-070	1	LAMP SET(L),FRT COMB (W/O DAY RUNNING LAMP)			
51-065G NA01-51-064	2	SOCKET,F. COMB. LAMP (W/O DAY RUNNING LAMP)			
51-069A NA01-51-069	2	TUBE,HEAD LAMP			
51-080 NA01-51-06XA	1	LENS & HOUSING(R)			
51-080Z NA01-51-07XA	1	LENS & HOUSING(L)			
51-110J 99701-6038	2	BULB 12V 3.8W			
51-120B 8BN1-51-120	1	LAMP SET(R),SIDE TURN			
51-120X 8BN1-51-130	1	LAMP SET(L),SIDE TURN			
51-121 NA01-51-5EXA	1	LENS & BODY(R)			
51-121Z NA01-51-5FXA	1	LENS & BODY(L)			
51-123 NA01-51-5D3A	2	GASKET,SIDE TURN			

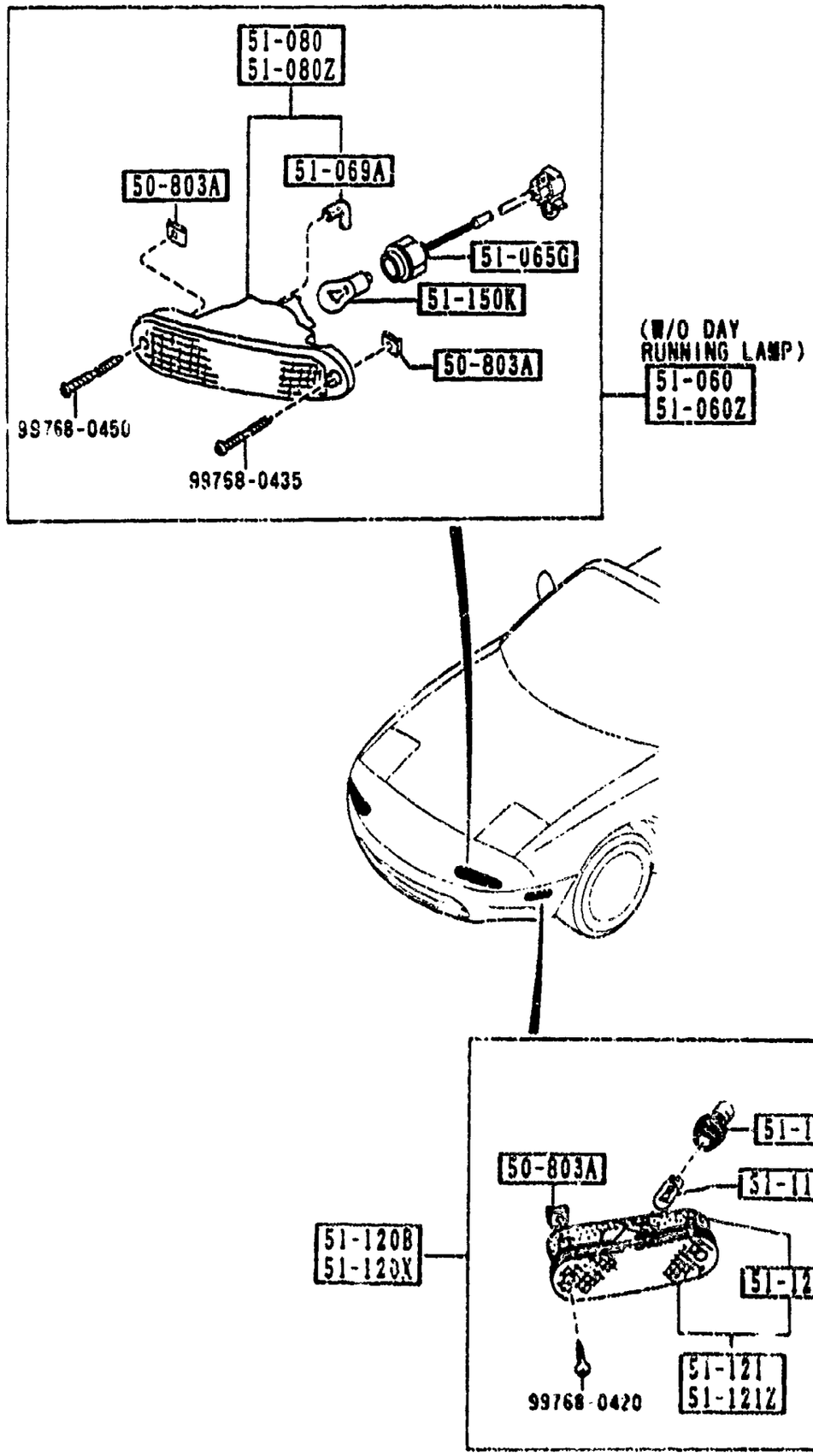

PART NO	QTY	MODEL/RESTRICTION	MODEL/RESTRICTION	MODEL/RESTRICTION	FROM-TO
51-124A		SOCKET,SIDE TURN			
NA01-51-5E2	2				
51-150K		BULB			
99701-4278Y	2	A12V 27/8W			

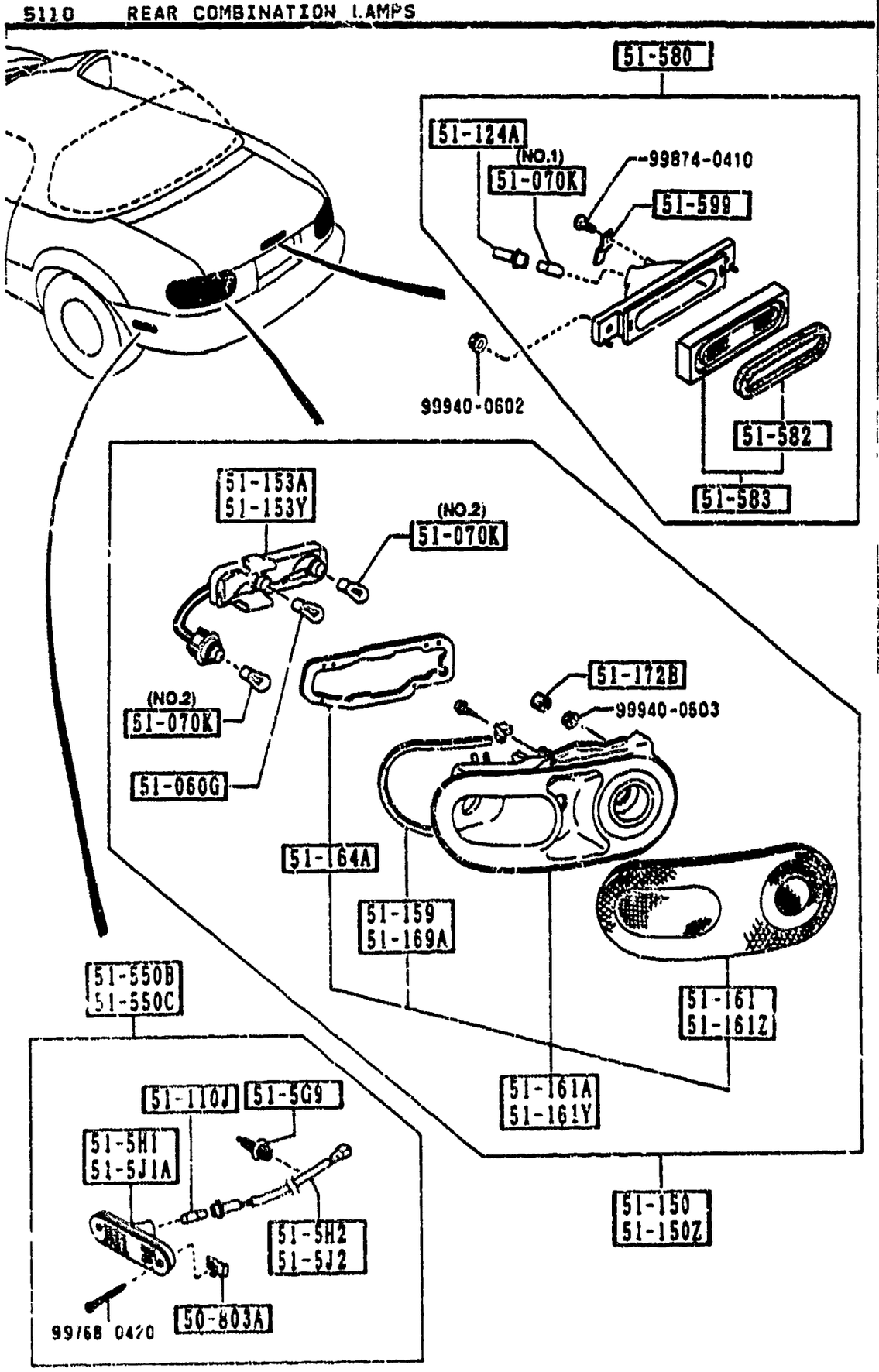

PART NO.	QTY	MODEL/RESTRICTION	MODEL/RESTRICTION	MODEL/RESTRICTION	FROM-TO
50-803A G156-50-803	4	NUT,SIDE PROTECTOR			
51-060G 99701-4278	2	BULB 12V 27W/8W			
51-070K 99700-7180	2	BULB A12V 18.4W (ILLUST. NO.1)			
99701-3270	4	12V 27W (ILLUST. NO.2)			
51-110J 99701-6038	2	BULB 12V 3.8W			
51-124A BJ38-51-584	1	SOCKET,SIDE TURN			
51-150 8BN1-51-150	1	LAMP SET(R),RR.COMB.			
51-150Z 8BN1-51-160	1	LAMP SET(L),RR.COMB.			
51-153A N001-51-155A	1	SOCKET(R),RR.COMB.			
51-153Y N001-51-165A	1	SOCKET(L),RR.COMB.			
51-159 NA01-51-159	1	PROTECTOR(R),'A'			
51-161 NA01-51-15XB A (NA01-51-15XC)	1	LENS(R),RR.COMB.			-3901
NA01-51-15XC	1				3901-
51-161A NA01-51-170B	1	LENS & BODY(R),RR COMB.			

3901 NA3###-502360

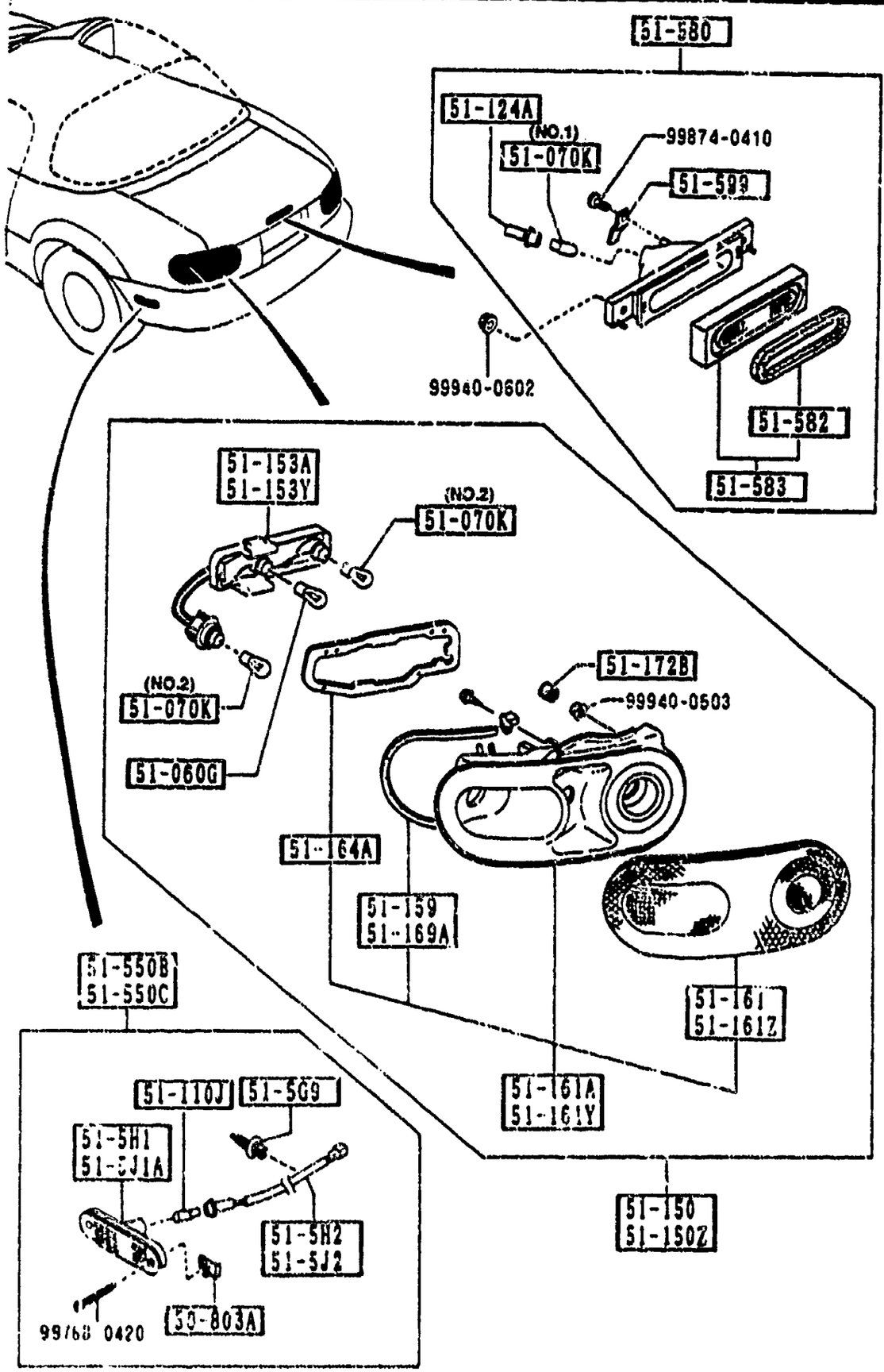

PART NO.	QTY	MODEL/RESTRICTION	MODEL/RESTRICTION	MODEL/RESTRICTION	FROM-TO
51-161Y NA01-51-180B	1	LENS & BODY(L),RR COMB.			
51-161Z NA01-51-16XB A (NA01-51-16XC)	1	LENS(L),RR.COMB.			-3901
NA01-51-16XC	1				3901-
51-164A NA01-51-158	2	GASKET,RR.COMB.			
51-169A NA01-51-169	1	PROTECTOR(L),'A'			
51-172B G030-51-172	1	CAP			
51-5G9 NA01-51-5G9	8	CLIP			
51-5H1 NA01-51-5H1C	1	LENS & BODY(R),RR SIDE TURN			
51-5H2 NA01-51-5H2A	1	SOCKET(R),RR SIDE TURN			
51-5J1A NA01-51-5J1C	1	LENS & BODY(L),RR SIDE TURN			
51-5J2 NA01-51-5J2A	1	SOCKET(L),RR SIDE TURN			
51-550B 8BN1-51-550	1	LAMP SET(R),SIDE TURN-RR			
51-550C 8BN1-51-560	1	LAMP SET(L),SIDE TURN-RR			
51-580 NA01-51-580B	1	LAMP,STOP-HI.MOUNT.			

3901 NA3##7-502360

5110 REAR COMBINATION LAMPS

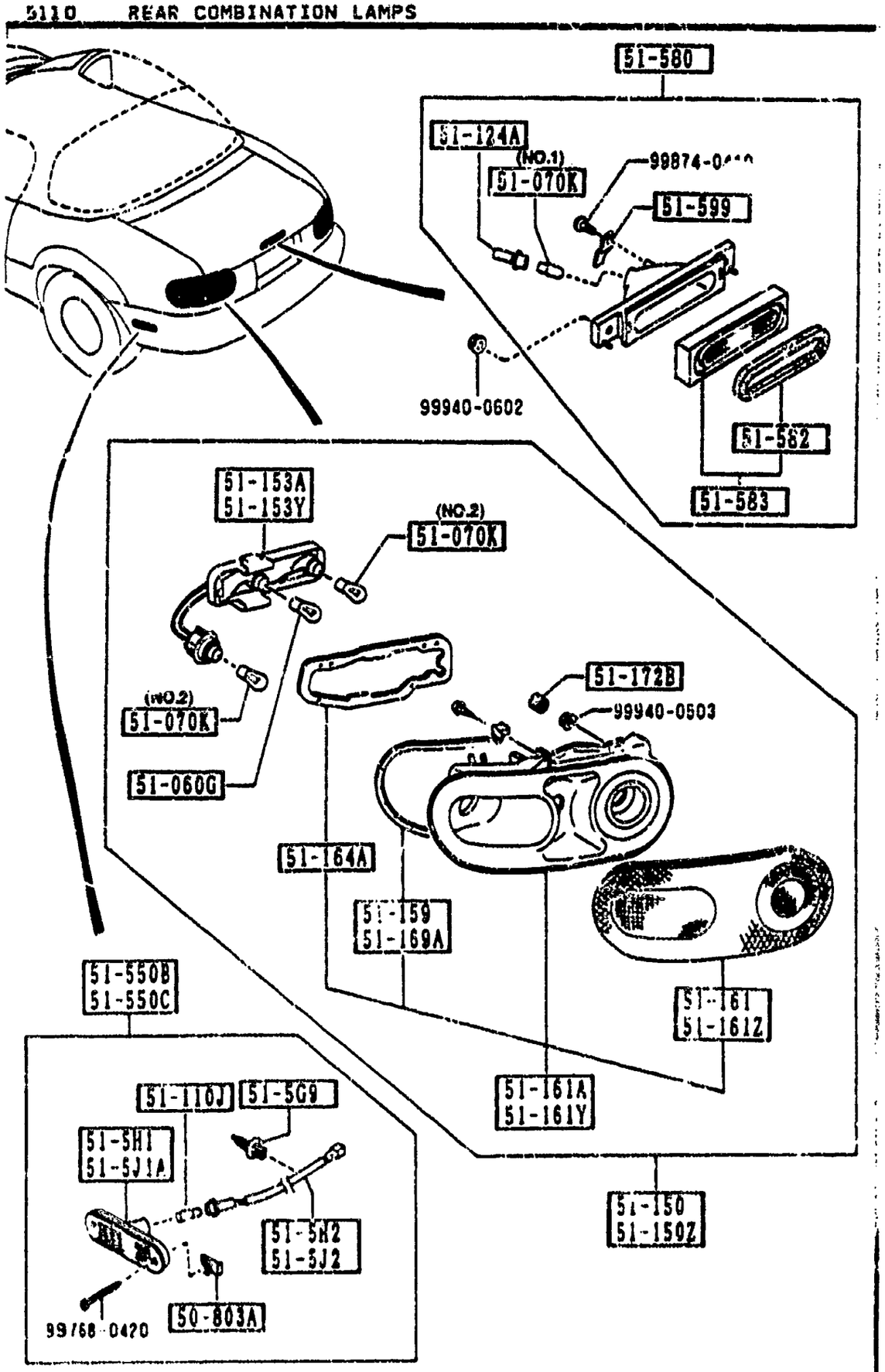

PART NO.	QTY	MODEL/RESTRICTION	MODEL/RESTRICTION	MODEL/RESTRICTION	FROM-TO
51-582 NA01-51-592B	1	GASKET,STOP LAMP-HI. MOUNT			
51-583 NA01-51-58XA	1	LENS,STOP LAMP-HI.MOUNT			
51-599 NA01-51-599	1	FASTENER,STOP LAMP-HI.			

5120 LICENSE LAMPS

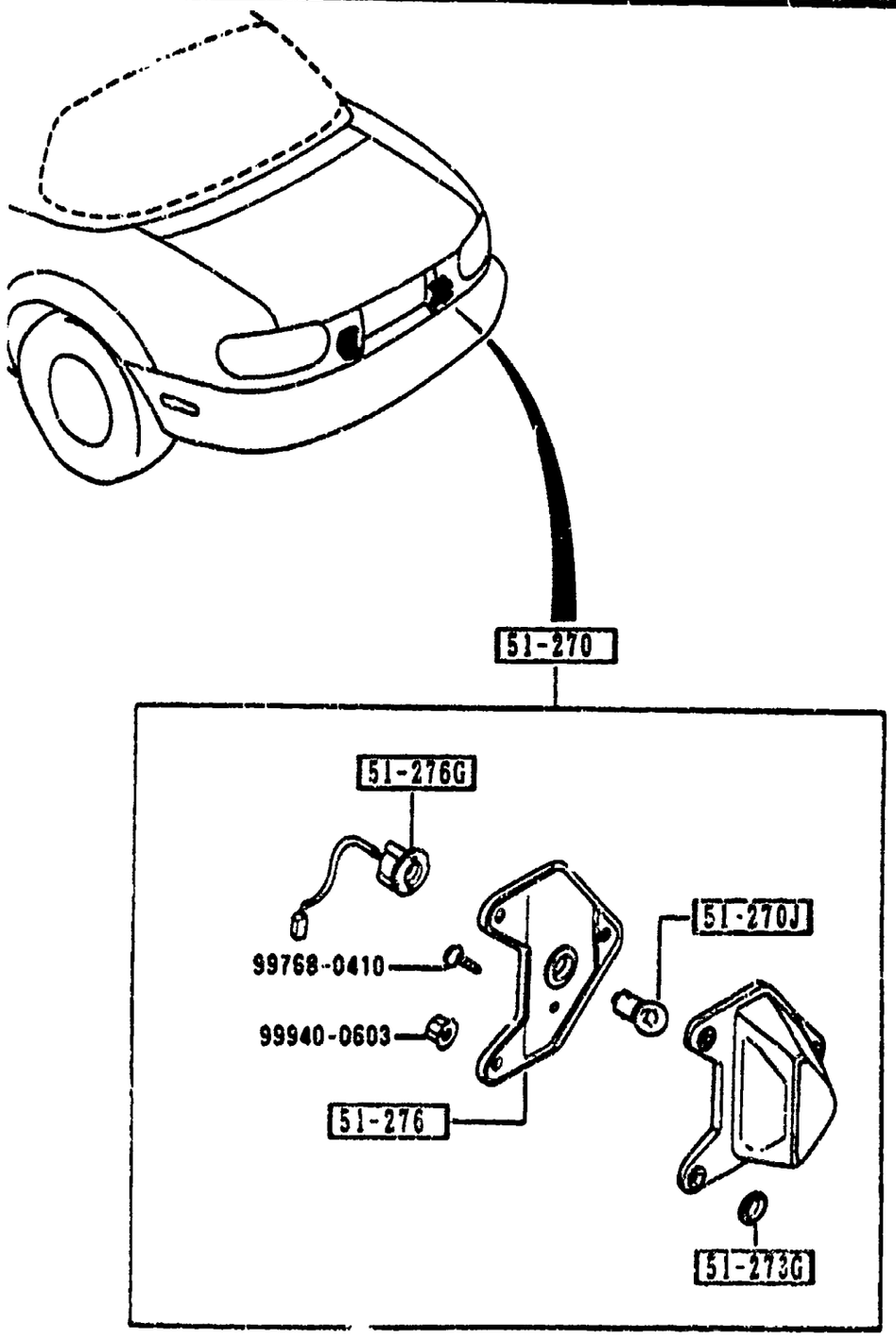

PART NO.	QTY	MODEL/RESTRICTION	MODEL/RESTRICTION	MODEL/RESTRICTION	FROM-TO
51-270		LAMP,LICENSE			
88F1-51-270	2				
51-270J		BULB			
99701-2070	2	12V 7.5W			
51-273G		GASKET,LICENSE LAMP			
FB67-51-273	2				
51-276		SHADE,LAMP-LICENSE			
FB67-51-276	2				
51-276G		SOCKET,LICENSE LAMP			
FB67-51-272	2				

5170 ORNAMENTS

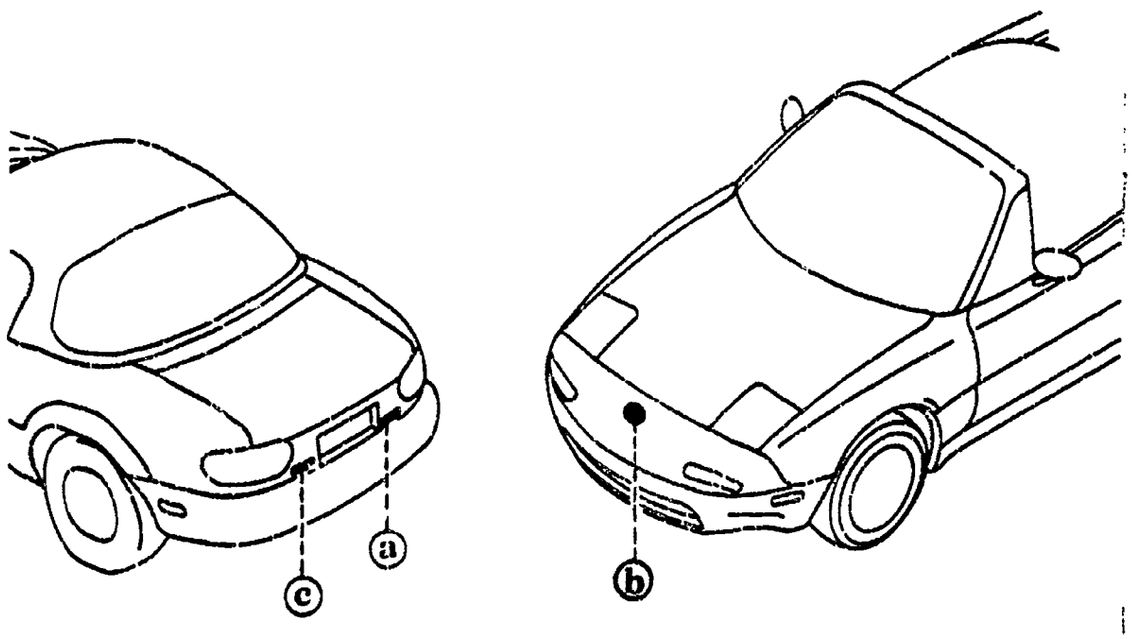

PART NO.	QTY	MODEL/RESTRICTION	MODEL/RESTRICTION	MODEL/RESTRICTION	FROM-TO
51-711A BB1H-51-731	1	ORNAMENT,FRONT			
51-711B NA01-51-711	1	ORNAMENT,MAKER NAME-REAR			
51-781 NA01-51-721A	1	ORNAMENT,REAR			

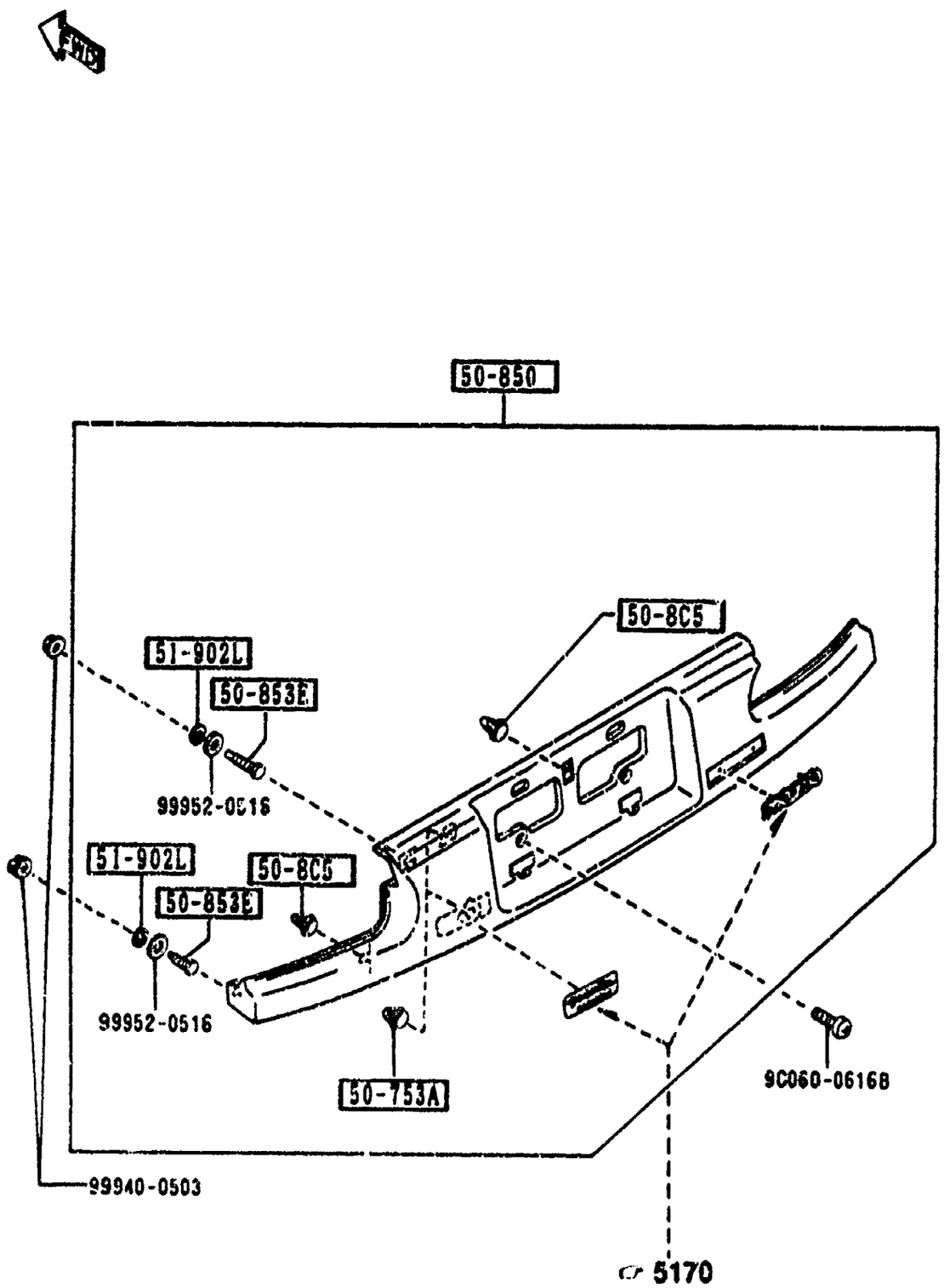

5180 -1 * REAR FINISHER

PART NO.	QTY	MODEL/RESTRICTION	MODEL/RESTRICTION	MODEL/RESTRICTION	FROM-TO
50-753A		FASTENER			
0043-50-753	4				
50-8C5		CLIP			
B467-50-8C5	3				
50-850		FINISHER,REAR			
NA01-50-850H	1				
M8	EXT-	M8 MONTEGO BLUE M			
PT	EXT-	PT CHAST WHITE			
PZ	EXT-	PZ BRILLIANT BLACK			
SU	EXT-	SU CLASSIC RED			
6W	EXT-	6W LAGUNA BLUE M.			
50-853E		BOLT,GARNISH-RR			
LA01-50-853	4				
51-902L		GASKET			
0030-51-914	4				

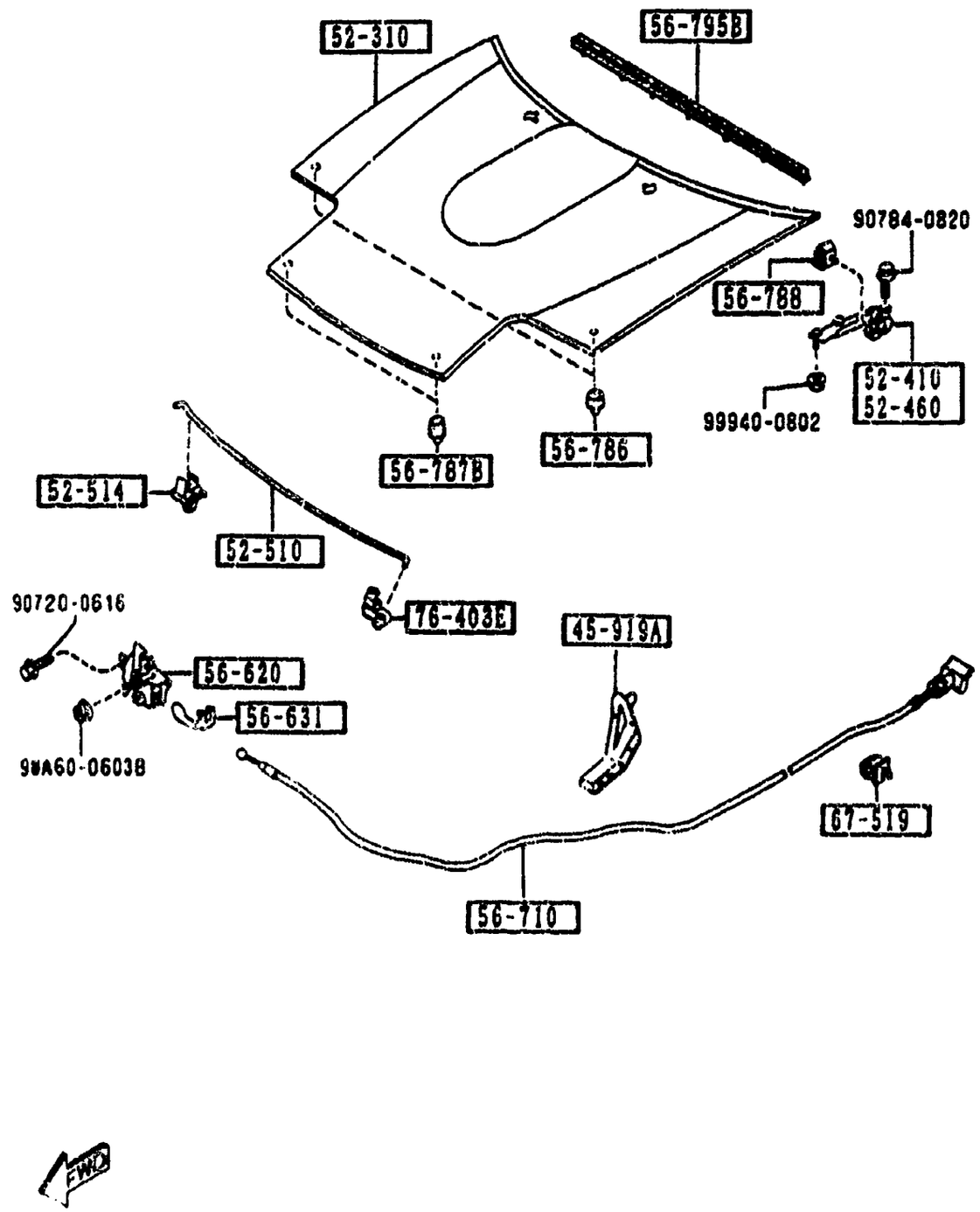

PART NO.	QTY	MODEL/RESTRICTION	MODEL/RESTRICTION	MODEL/RESTRICTION	FROM-TO
45-919A H115-45-916A	1	HOLDER,PIPE			
52-310 NAY1-52-310B	1	BONNET			
52-410 NA01-52-410A	1	HINGE(R),BONNET			
52-460 NA01-52-420A	1	HINGE(L),BONNET			
52-510 NA75-56-650A	1	STAY,BONNET			
52-514 G030-56-693A	1	HOLDER,ROD			
56-620 NA01-56-620A	1	LOCK,BONNET			
56-631 LA01-56-631	1	FASTENER,BONNET RELEASE			
56-710 NA01-56-720D	1	WIRE,RELEASE-BONNET			
56-786 NA01-56-787	2	RUBBER(C),CUSHION-BONNET			
56-787B FB01-56-787A A (FB01-56-787B)	2	RUBBER,CUSHION-BONNET FRT			-4401
FB01-56-787B	2				4401-
56-788 NA01-56-78X	2	RUBBER,CUSHION-BONNET RR			
56-795B NA01-56-760	1	WEATHERSTRIP,BONNET-REAR			

4401 NA3***-517818

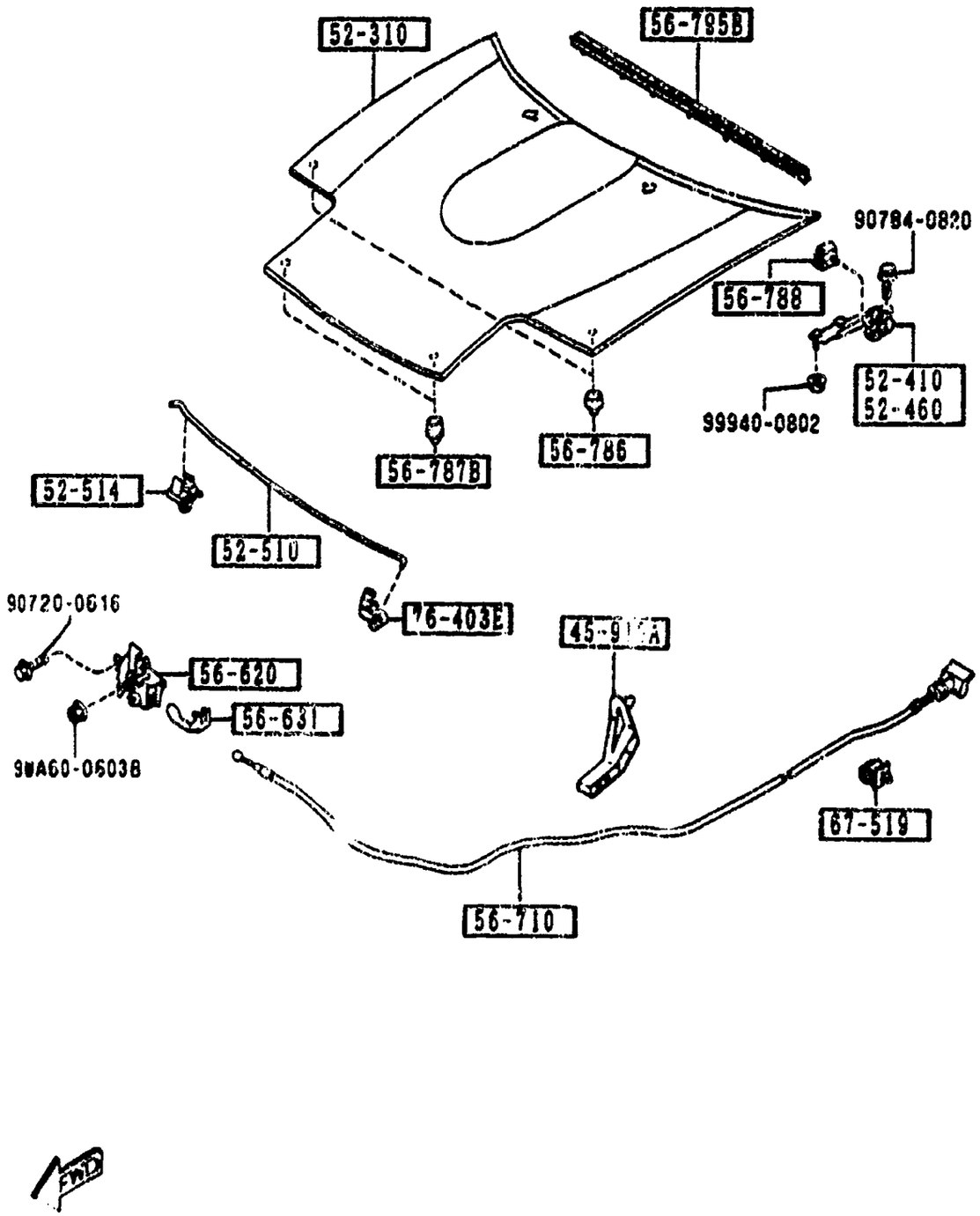

PART NO.	QTY	MODEL/RESTRICTION	MODEL/RESTRICTION	MODEL/RESTRICTION	FROM-TO
67-519		CLIP,PIPE			
G030-67-519	1				
76-403E		HOLDER,ROD			
N092-52-518	1				

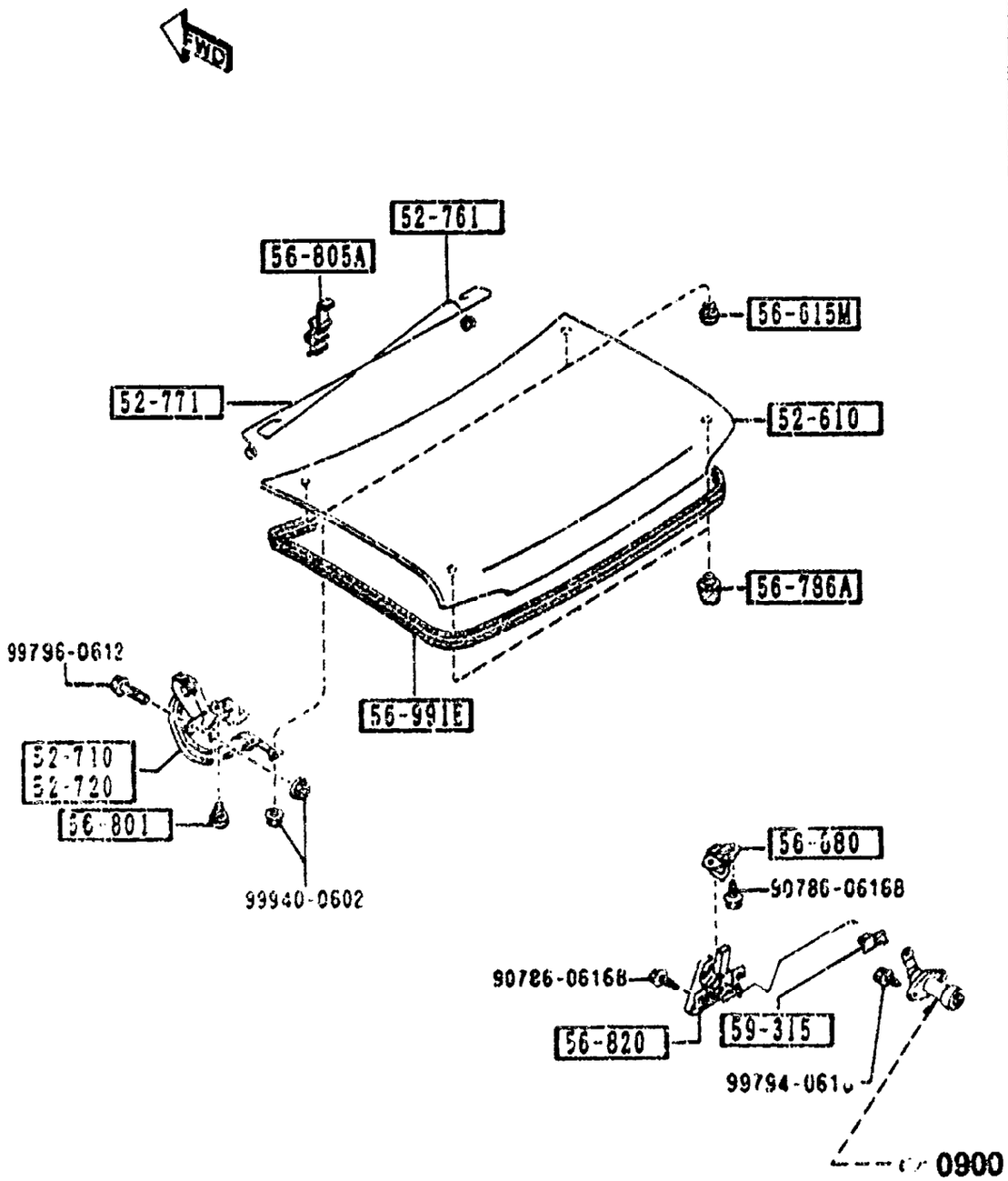

PART NO.	QTY	MODEL/RESTRICTION	MODEL/RESTRICTION	MODEL/RESTRICTION	FROM-TO
52-610 NAY1-52-610B	1	LID,TRUNK			
52-710 NA01-52-710A	1	HINGE(R),TRUNK LID			
52-720 NA01-52-720A	1	HINGE(L),TRUNK LID			
52-761 NA01-52-791A	1	SPRING(R),BALANCE			
52-771 NA01-52-792A	1	SPRING(L),BALANCE			
56-615M NA01-56-051	2	PLUG,DRAIN			
56-786A B481-56-786	2	RUBBER,CUSHION			
56-801 NA01-56-802	2	CUSHION,LID HINGE			
56-805A NA01-56-805	1	HOLDER,BALANCE SPRING			
56-820 N007-56-820	1	LOCK,LID			
56-880 NA01-56-840	1	STRIKER,LID			
56-991E NA01-56-951	1	WEATHERSTRIP,LID			
59-315 G030-59-315	1	CLIP			

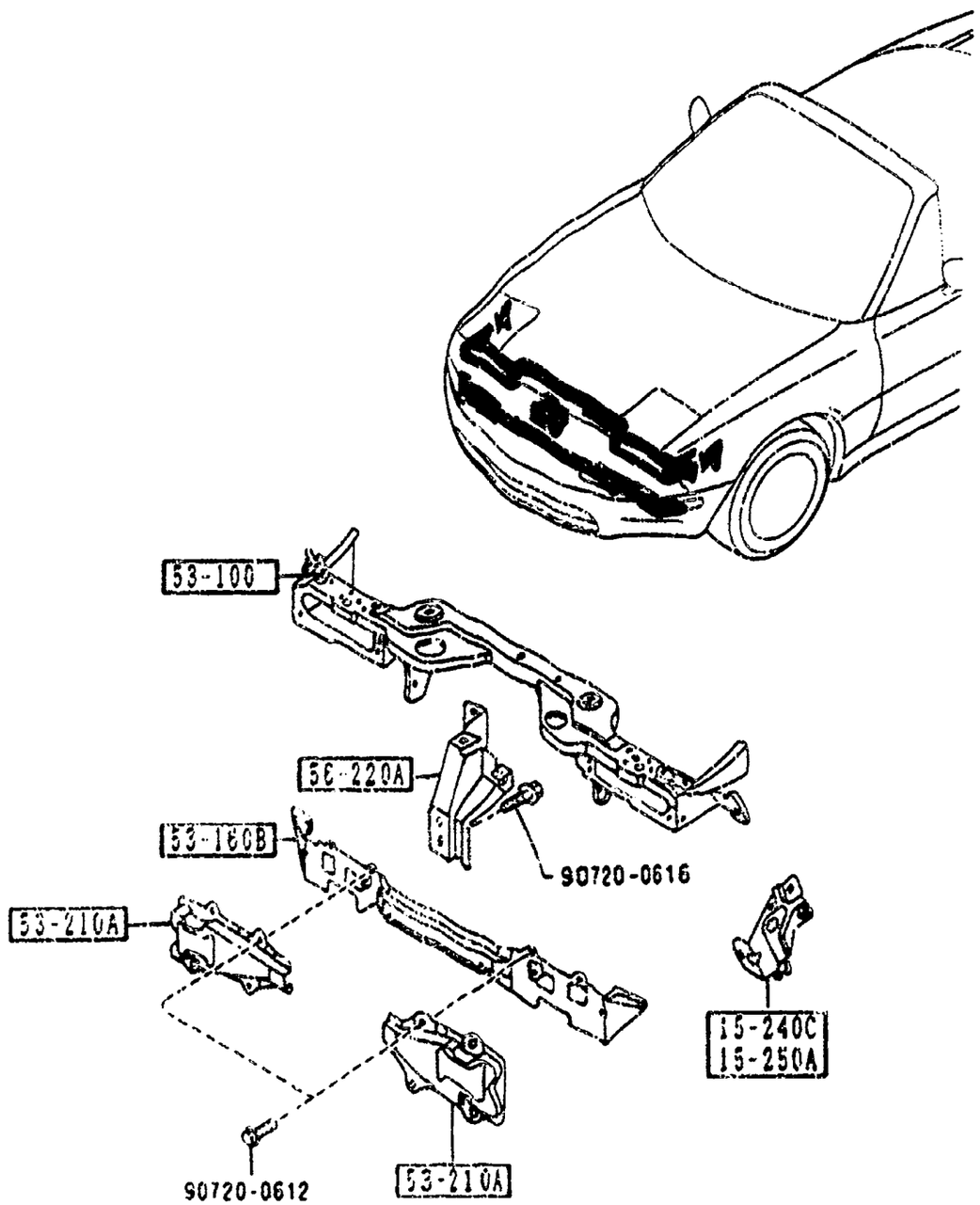

5310 -1 * FRONT PANELS

PART NO.	QTY	MODEL/RESTRICTION	MODEL/RESTRICTION	MODEL/RESTRICTION	FROM-TO
15-240C B61P-15-240A	1	BRACKET(R),RADIATOR			
15-250A B61P-15-250A	1	BRACKET(L),RADIATOR			
53-100 NA75-53-100	1	PANEL,RAD.SHROUD			
53-160B NA01-53-16XC	1	MEMBER,CROSS			
53-210A NA01-54-180	2	BRACKET,BUMPER			
56-220A NA01 56-221B	1	STAY,LOCK-BONNET			

5320 FENDER & WHEEL APRON PANELS

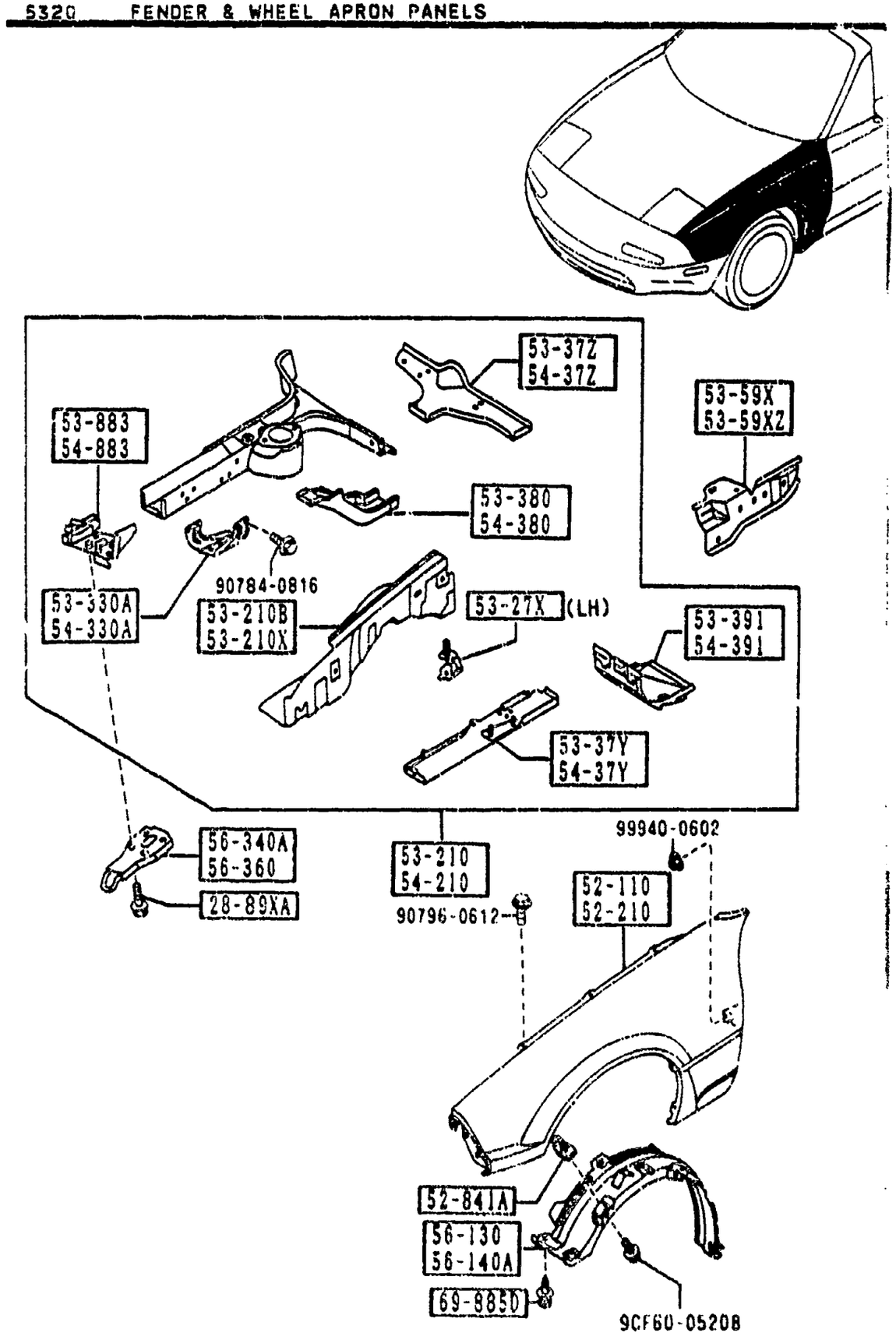

PART NO.	QTY	MODEL/RESTRICTION	MODEL/RESTRICTION	MODEL/RESTRICTION	FROM-TO
28-89XA GJ21-28-89X	6	BOLT,CROSS MEMBER			
52-110 NAY1-52-110	1	PANEL(R),FENDER-FRT.			
52-210 NAY1-52-210	1	PANEL(L),FENDER-FRT.			
52-841A LA01-56-135	10	NUT,CLIP			
53-210 NAY2-53-200	1	PANEL(R),WHEEL APRON			
53-210B NA01-53-210E	1	PANEL(R),WHEEL APRON			
53-210X NA01-54-210F	1	PANEL(L),WHEEL APRON			
53-27X NA01-54-36X	1	BRKT,AIR CLNR-WHL APRON			
53-330A NA01-53-330	1	BRACKET(R),STABILIZER			
53-37Y NA01-53-37Y	1	FRAME(UP.,R),FRONT-FRT			
53-37Z NA01-53-37ZA	1	FRAME(UP.R),FRONT-REAR			
53-380 NA01-53-380	1	REINFORCEMENT(R)			
53-391 NA01-53-391	1	BOX(R),TORQUE			
53-59X NA01-53-591	1	REINF.(R),WHEEL APRON			

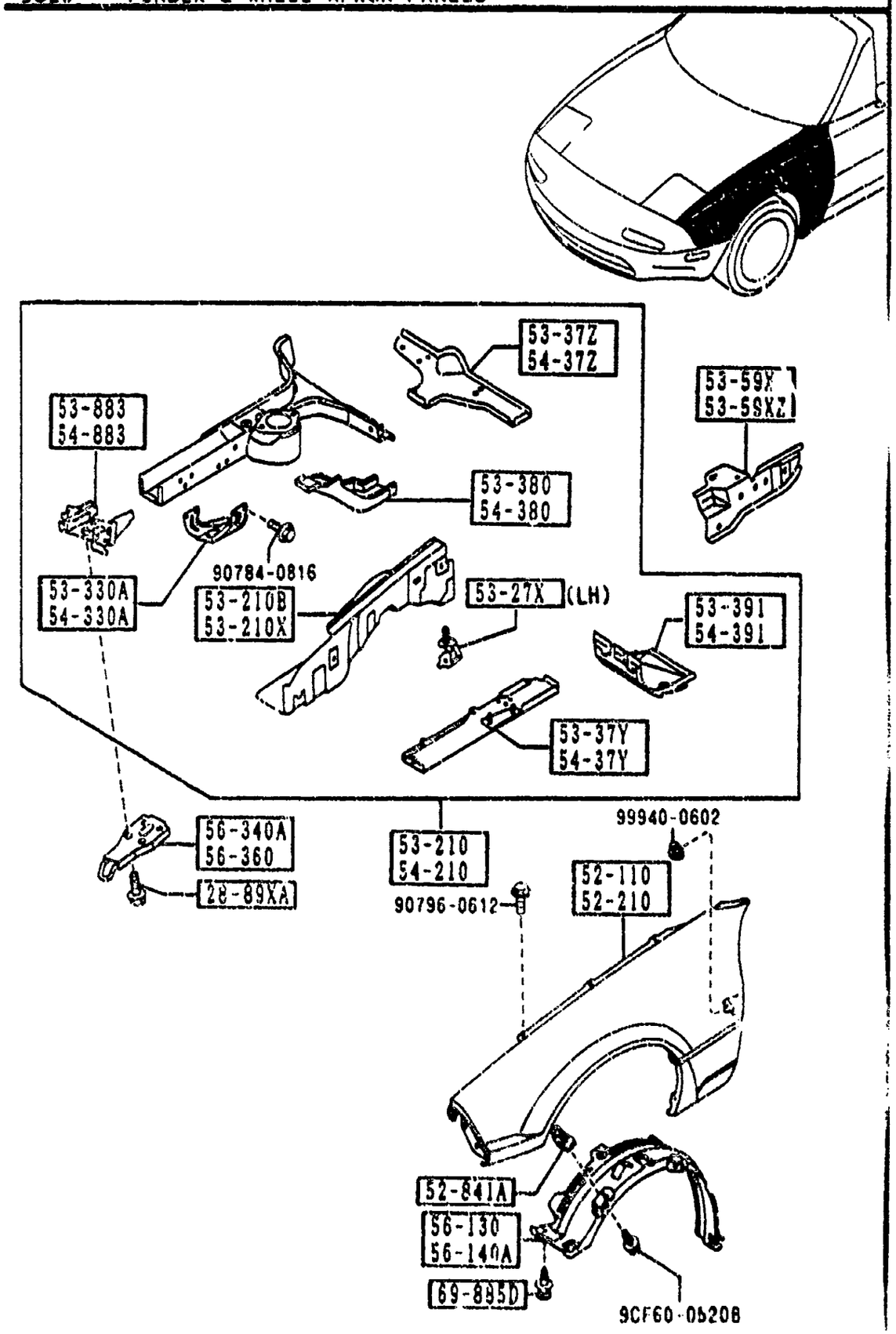

PART NO.	QTY	MODEL/RESTRICTION	MODEL/RESTRICTION	MODEL/RESTRICTION	FROM-TO
53-59XZ NA01-54-590	1	REINF.(L),WHEEL APRON			
53-883 NA01-53-32XB	1	REINF.(R),TIE DOWN HOOK			
54-210 NAY2-54-200	1	PANEL(L),WHEEL APRON			
54-330A NA01-54-330	1	BRACKET(L),STABILIZER			
54-37Y NA01-54-37Y	1	FRAME(UP.,L),FRONT-FRT			
54-37Z NA01-54-37ZA	1	FRAME(UP.L),FRONT-REAR			
54-380 NA01-54-380B	1	FRAME(L),FRONT-REAR			
54-391 NA01-54-391	1	BOX(L),TORQUE			
54-883 NA01-54-32XC	1	REINF.(L),TIE DOWN HOOK			
56-130 NA01-56-131A	1	GUARD(R),MUD			
56-140A NA01-56-141C	1	GUARD(L),MUD			
56-340A NA01-56-34XC	1	HOOK(R),TIE DOWN-FRONT			
56-360 NA01-56-34YC	1	HOOK(L),TIE DOWN-FRONT			
69-885D NA01-56-145	10	FASTENER			

5330 DASH & COWL PANELS

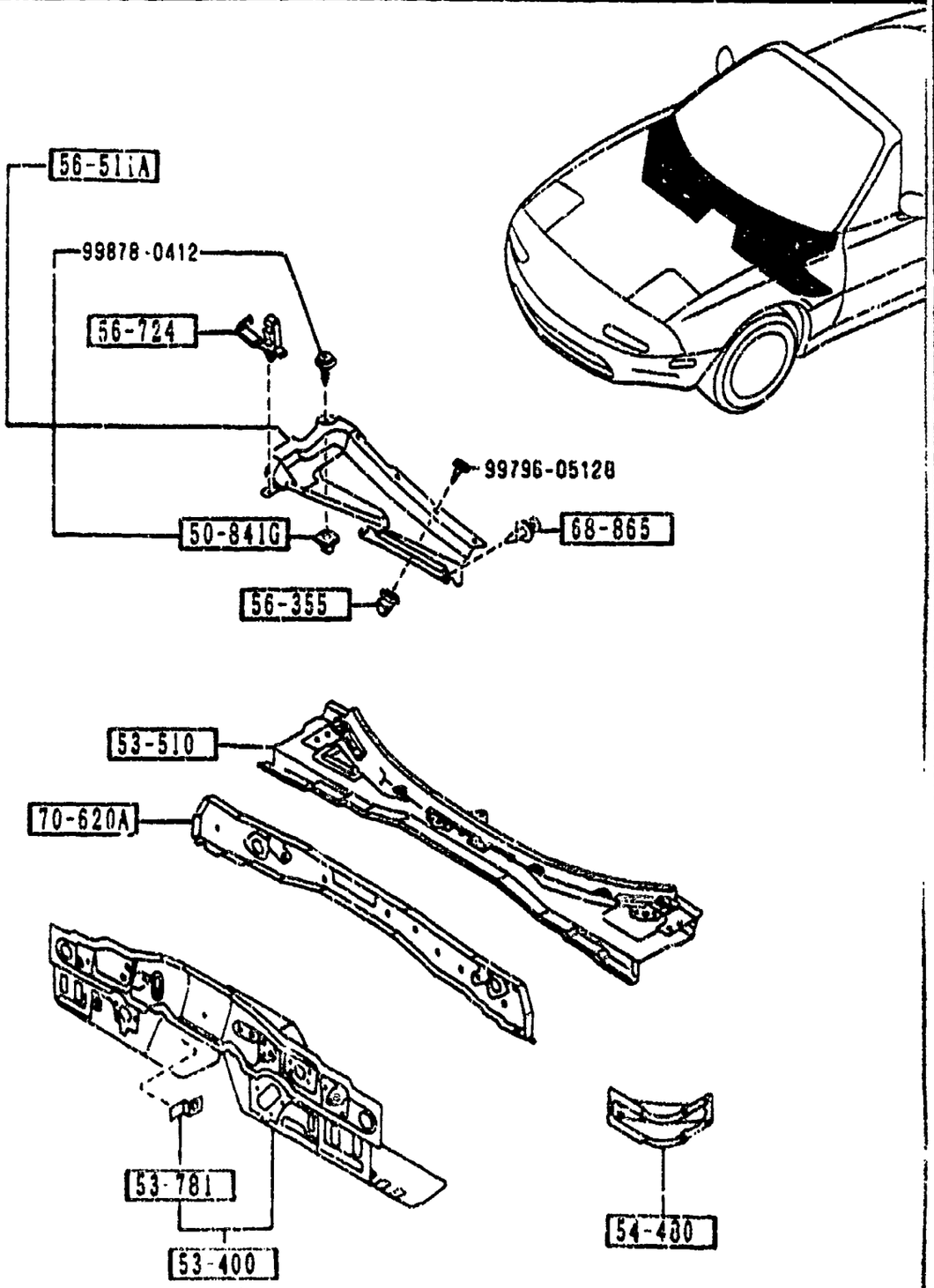

PART NO.	QTY	MODEL/RESTRICTION	MODEL/RESTRICTION	MODEL/RESTRICTION	FROM-TO
50-841G		GROMMET,SCREW			
F044-51-912	1				
53-400		PANEL,DASH-LOWER			
NA01-54-400G	1				
53-510		PANEL,DASH-UPPER			
NA75-53-510	1				-4607
AN(NA75-53-510A)					
*NA75-53-510A	1				4607-
53-781		BRACKET,GRILLE-C			
0305-53-781A	1				
54-480		JUNCTION,DASH SIDE-S .SILL			
NA01-54-480	2				
56-355		GROMMET,SCREW-BAFFLE			
G211-56-355A	4				
56-511A		COVER,BAFFLE-COWL PA NEL			
NA01-56-35X	1				
56-724		CLIP'B',WIRE-BONNET			
H260-56-724	1				
68-865		FASTENER			
B040-68-865A	2				
00	INT-	NA3 NA5 BLACK			
70-620A		PANEL,COWL-FRONT			
NA01-70-62YB	1				

4607 NA3***-519668

5340 SIDE PANELS

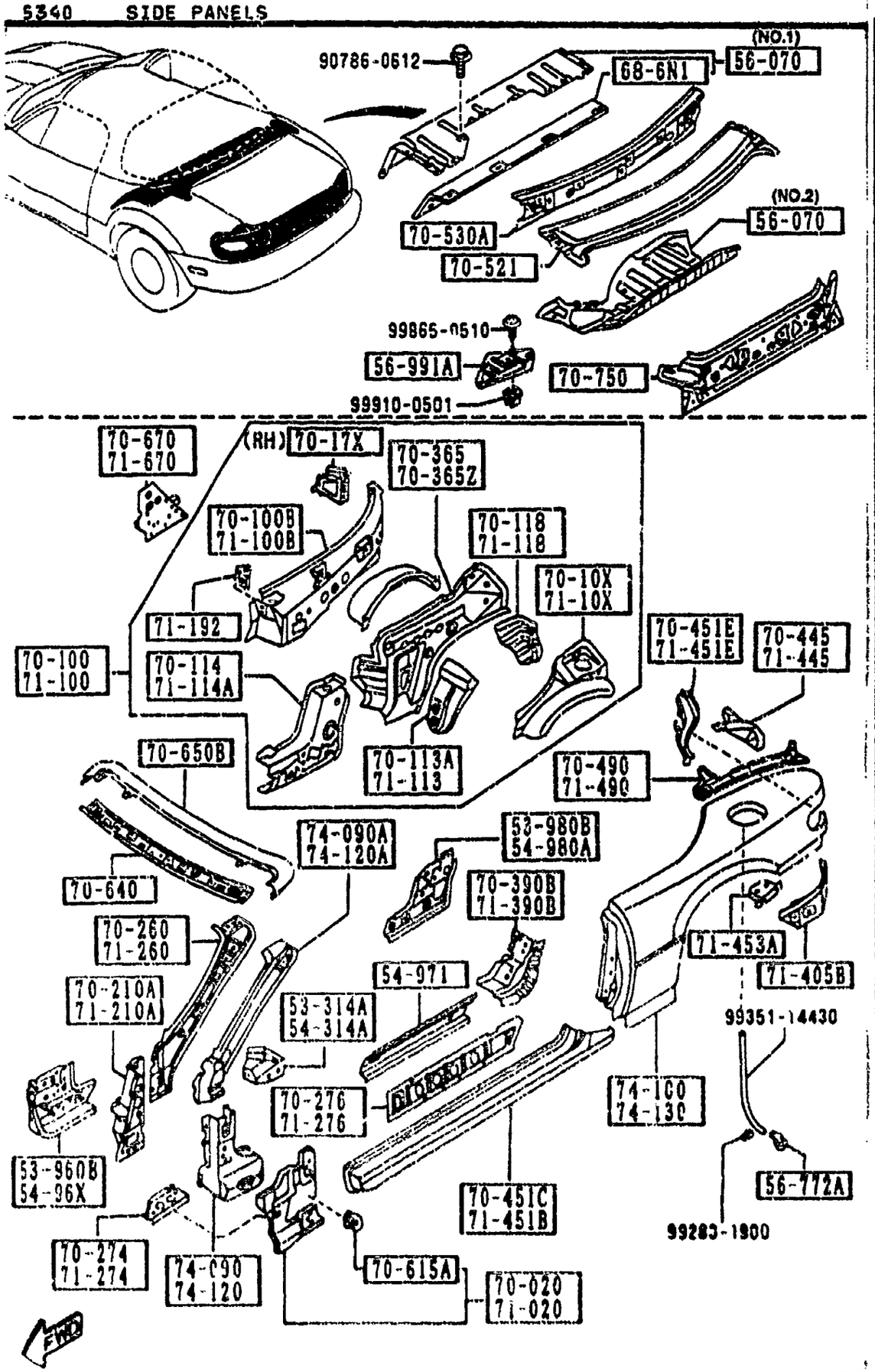

PART NO.	QTY	MODEL/RESTRICTION	MODEL/RESTRICTION	MODEL/RESTRICTION	FROM-TO
53-314A		BRACKET(R),INST.			
NA01-70-071A	1				
53-960B		SILL(FRT.R),SIDE-INNER			
NA75-53-960	1				-3A01
NA01-53-960C	1				3A01-
53-980B		SILL(RR.R),SIDE-INNER			
NA01-53-980B AN(NA01-53-980C)	1				-3A28
NA01-53-980C	1				3A28-
54-314A		BRACKET(L),INST.			
NA01-71-071A	1				
54-96X		SILL(FRT.L),SIDE-INNER			
NA01-54-96XB	1				
54-971		SILL(C),SIDE-INNER			
NA75-54-971	2				-3A01
NA01-54-971A	2				3A01-
54-980A		SILL(RR.L),SIDE-INNER			
NA01-54-980B AN(NA01-54-980C)	1				-3A28
NA01-54-980C	1				3A28-
56-070		PANEL,BULK HEAD			
NA01-56-39YA	1	(ILLUST. NO.1)			
NA01-70-51Y	1	(ILLUST. NO.2)			
56-772A		PIPE,DRAIN-RR FENDER			
NA01-56-772	1				
56-991A		COVER,SERVICE HOLE			
NA01-56-071	1				
68-6N1		INSULATOR,BALK HEAD PANEL			
NA01-68-6N1	1				

3A01 NA3***-505179
3A28 NA3***-505745

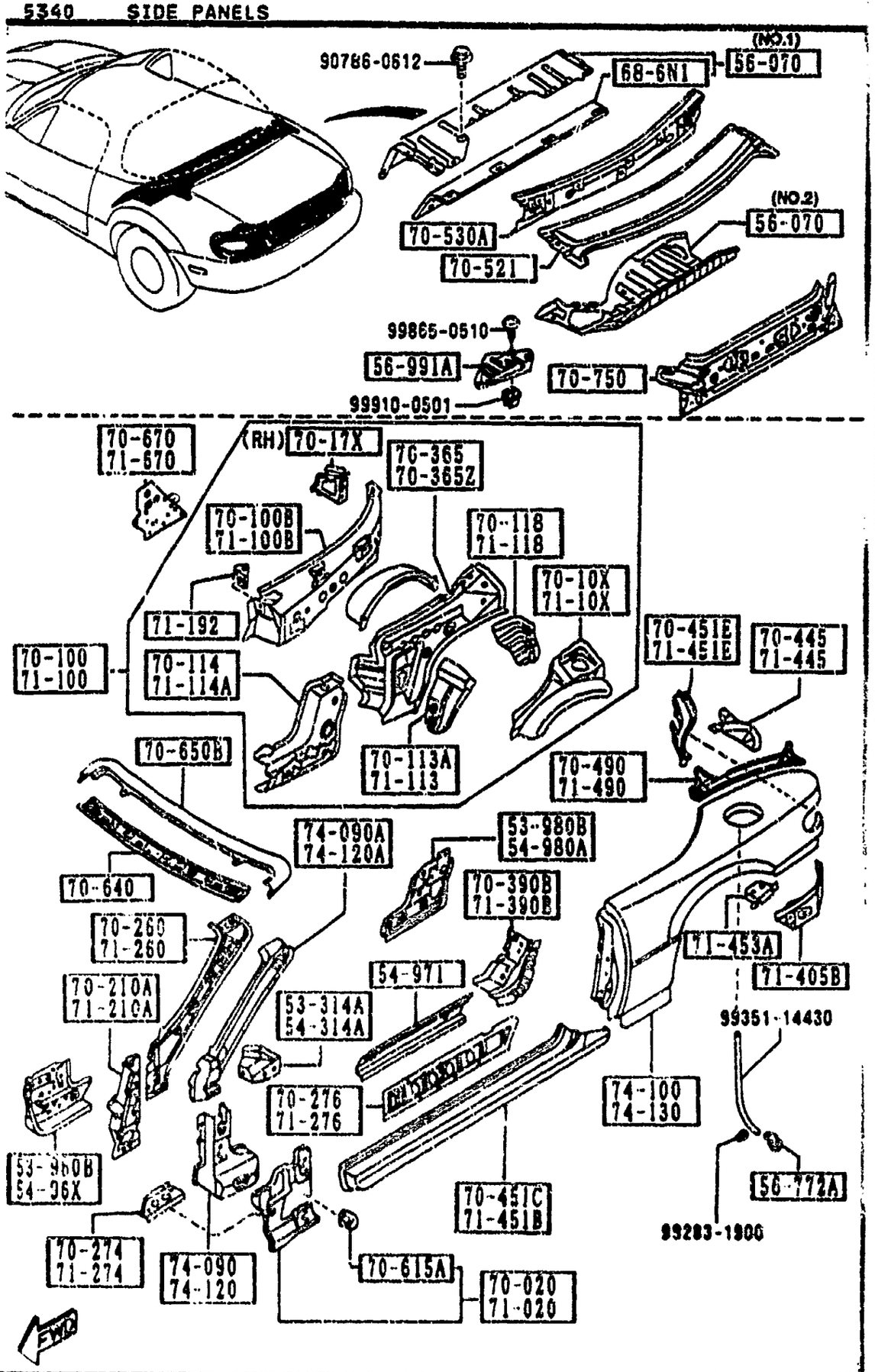

AUNA04

PART NO.	QTY	MODEL/RESTRICTION	MODEL/RESTRICTION	MODEL/RESTRICTION	FROM-TO
70-020 NA01-70-020B	1	PANEL(R),COWL SIDE			
70-10X NA01-70-111C	1	PANEL(R),QUARTER			
70-100 NA75-70-100	1	PANEL(R),QUARTER			
70-100B NA01-70-19XB	1	PANEL(R),INSIDE			
70-113A NA01-70-11Z	1	PLATE(R),SEAL			
70-114 NA01-70-12XA	1	PLATE(R),END			
70-118 NA01-70-15X	1	PROTECTOR(R),SPLASH			
70-17X NA01-70-17XA	1	BRKT,BATT.CLAMP-QTR PANEL			
70-210A NA01-70-230	1	PILLAR(R),HINGE			
70-260 NA01-70-240B	1	PILLAR(R),FRT.-INNER			
70-274 NA01-70-274	1	GUSSET(R),SIDE SILL OUTER			
70-276 NA01-70-275	1	REINF.(R),SIDE SILL			
70-365 NA01-70-116A	1	REINF.(R),BELT LINE-C.PIL			
70-365Z NA01-71-116C	1	REINF.(L),BELT LINE-C.PIL			

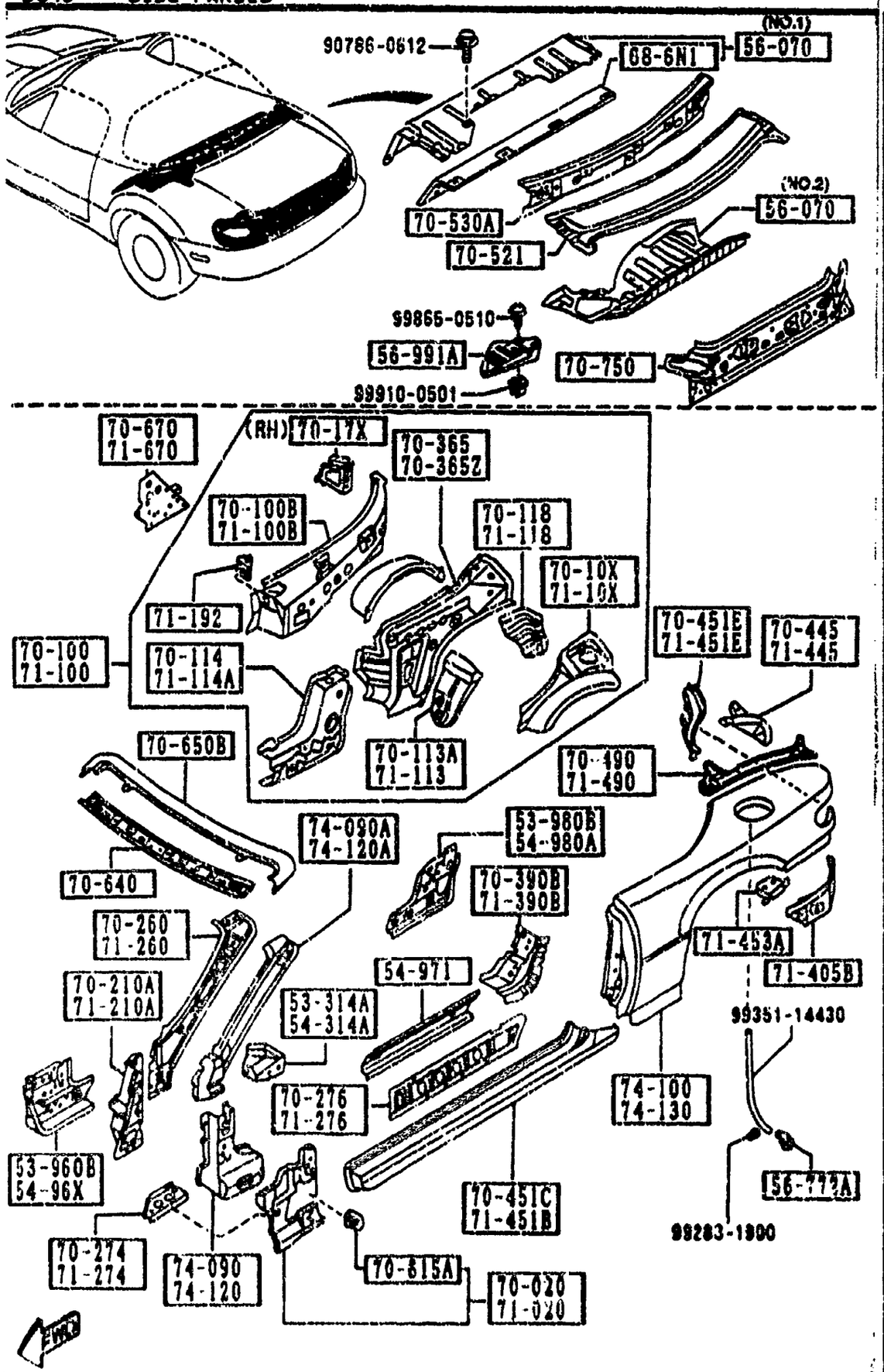

AUNA04

5340 -3 SIDE PANELS

PART NO.	QTY	MODEL/RESTRICTION	MODEL/RESTRICTION	MODEL/RESTRICTION	FROM-TO
70-390B NA01-70-460	1	REINF.(R),STRIKER			
70-445 NA01-70-445	1	GUSSET(R),REAR FENDER-RR			
70-451C NA01-70-270B	1	SILL(R),SIDE OUT.			
70-451E NA01-70-J30	1	HOUSING(R),LAMP-RR FENDER			
70-490 NA01-70-440A	1	RAIL(R),RAIN-REAR			
70-521 NA01-70-521A	1	PANEL,REAR DECK			
70-530A NA01-70-530A	1	MEMBER,REAR DECK			
70-615A B092-70-070A	2	BRACKET,FENDER			
70-640 NA01-70-640	1	HEADER,FRONT			
70-650B NA01-70-650	1	HEADER,FRONT-UPPER			
70-670 NA01-70-670	1	PLATE(R),CLOSING-QTR PANEL			
70-750 NA01-70-750G	1	PANEL,REAR END			
71-020 NA01-71-020B	1	PANEL(L),COWL SIDE			
71-10X NA01-71-11XB	1	PANEL(L),QUARTER			

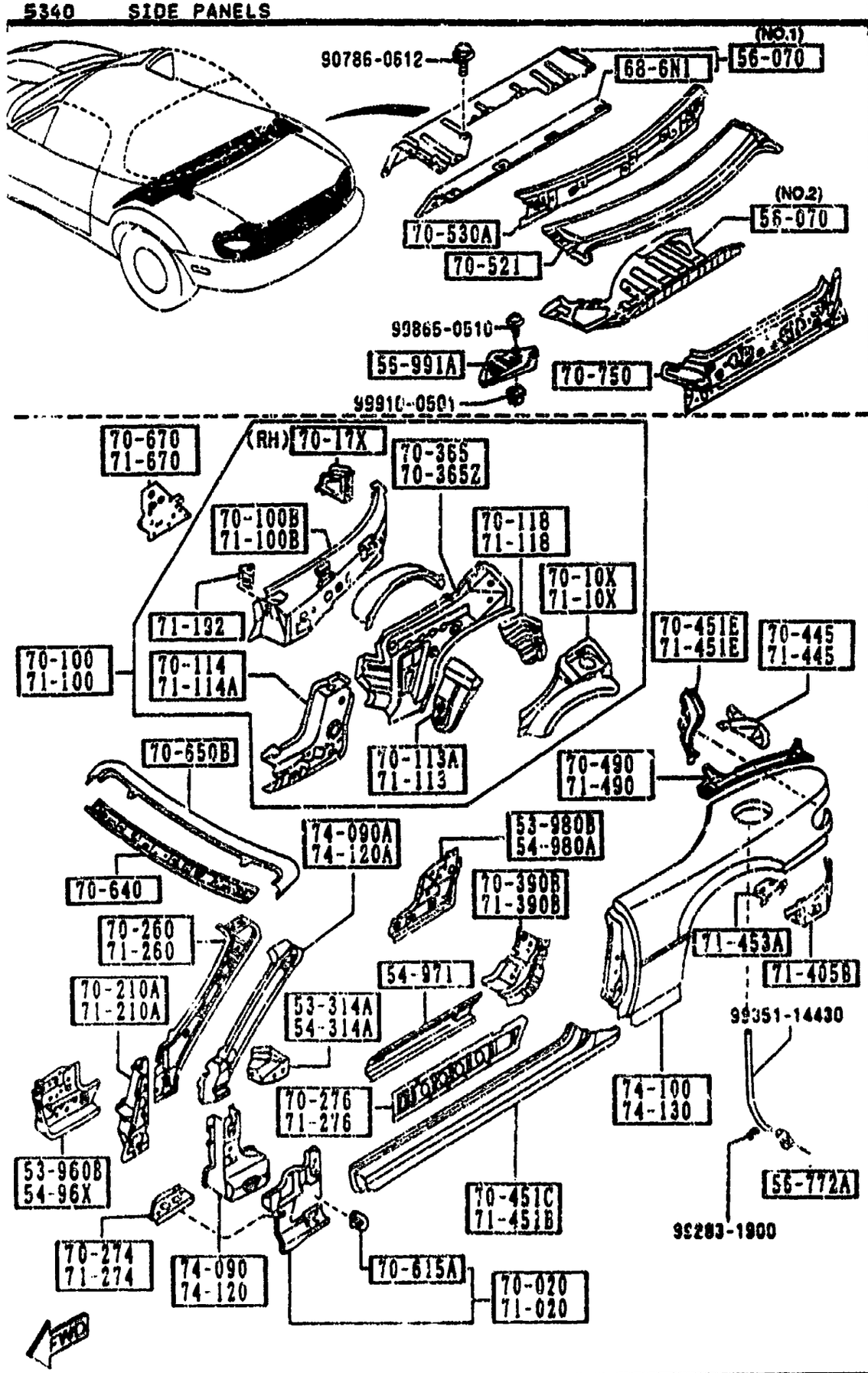

AUMA04

PART NO.	QTY	MODEL/RESTRICTION	MODEL/RESTRICTION	MODEL/RESTRICTION	FROM-TO
71-100 NA75-71-100	1	PANEL(L),QUARTER			
71-100B NA01-71-19XB	1	PANEL(L),INSIDE			
71-113 NA01-71-11Z	1	PLATE(L),SEAL			
71-114A NA01-71-12XA	1	JUNCTION(L),CORNER-Q/PANE			
71-118 NA01-71-15XA	1	PROTECTOR(L),SPLASH			
71-192 NA01-71-192	2	BRKT,CAP-QUARTER PANEL			
71-210A NA01-71-230	1	PILLAR(L),HINGE			
71-260 NA01-71-240B	1	PILLAR(L),FRT.-INNER			
71-274 NA01-71-274	1	GUSSET(L),SIDE SILL OUTER			
71-276 NA01-71-275	1	REINF.(L),SIDE SILL			
71-390B NA01-71-460	1	REINF.(L),STRIKER			
71-405B NA01-71-42.	1	PANEL(L),RR FENDER-LOWER			
71-445 NA01-71-445	1	GUSSET(L),REAR FENDER-RR			
71-451B NA01-71-270B	1	SILL(L),SIDE OUT.			

5340 SIDE PANELS

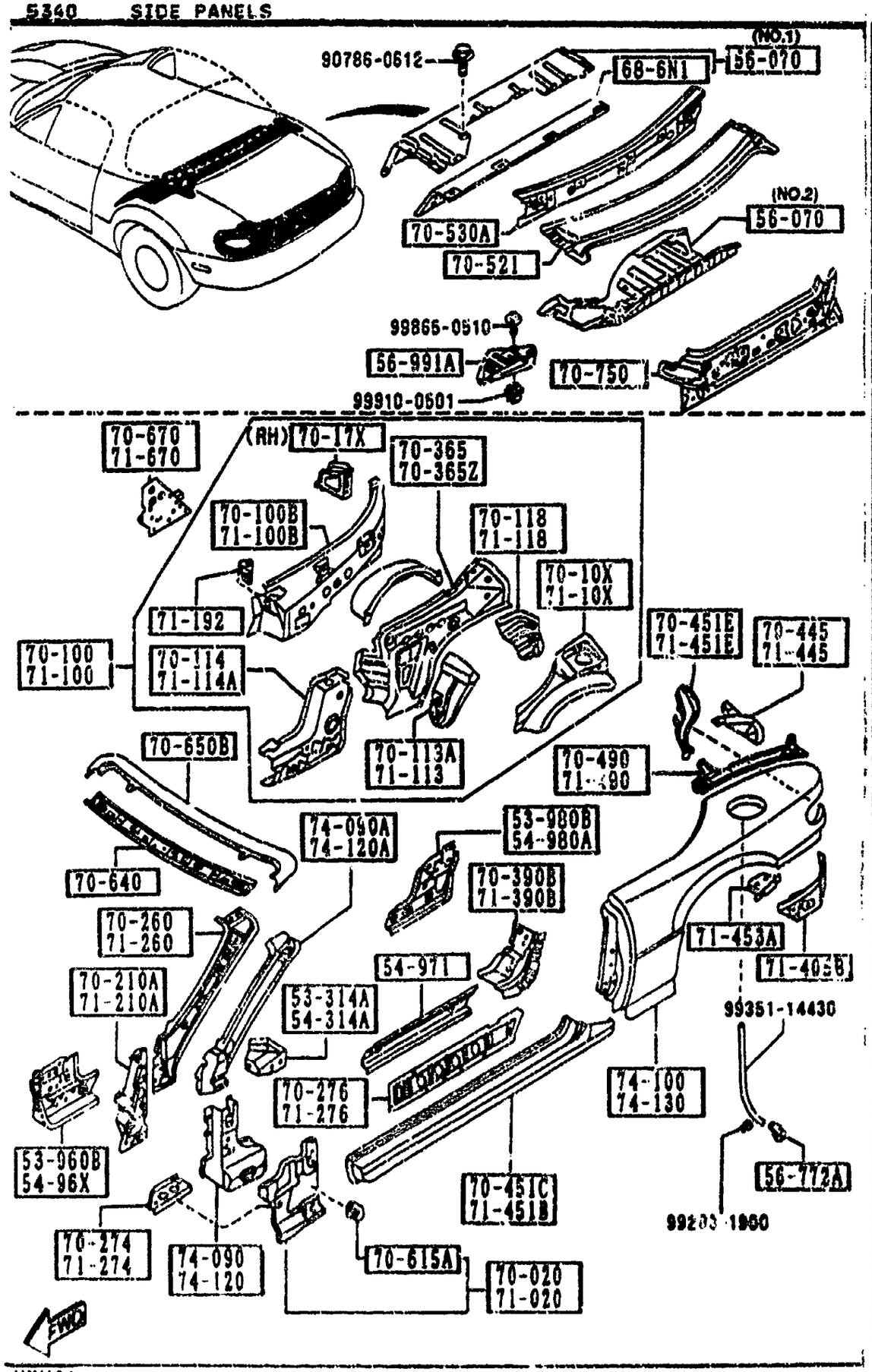

AUNA04

PART NO.	QTY	MODEL/RESTRICTION	MODEL/RESTRICTION	MODEL/RESTRICTION	FROM-TO
71-451E NA01-71-J30	1	HOUSING(L),LAMP-RR FENDER			
71-453A NA01-71-453	1	BRKT(L),TRK.BOARD-FENDER			
71-490 NA01-71-440A	1	RAIL(L),RAIN-REAR			
71-670 NA01-71-670B	1	PLATE(L),CLOSING-QTR PANEL			
74-090 NA01-70-280R	1	PILLAR(R),HINGE-OUT.			
74-090A NA01-70-210	1	PILLAR(R),FRONT-OUT.			
74-100 NAY1-70-400B	1	PANEL(R),FENDER-REAR			
74-120 NA01-71-280B	1	PILLAR(L),HINGE-OUT.			
74-120A NA01-71-210	1	PILLAR(L),FRONT-OUT.			
74-130 NAY1-71-400B	1	PANEL(L),FENDER-REAR			

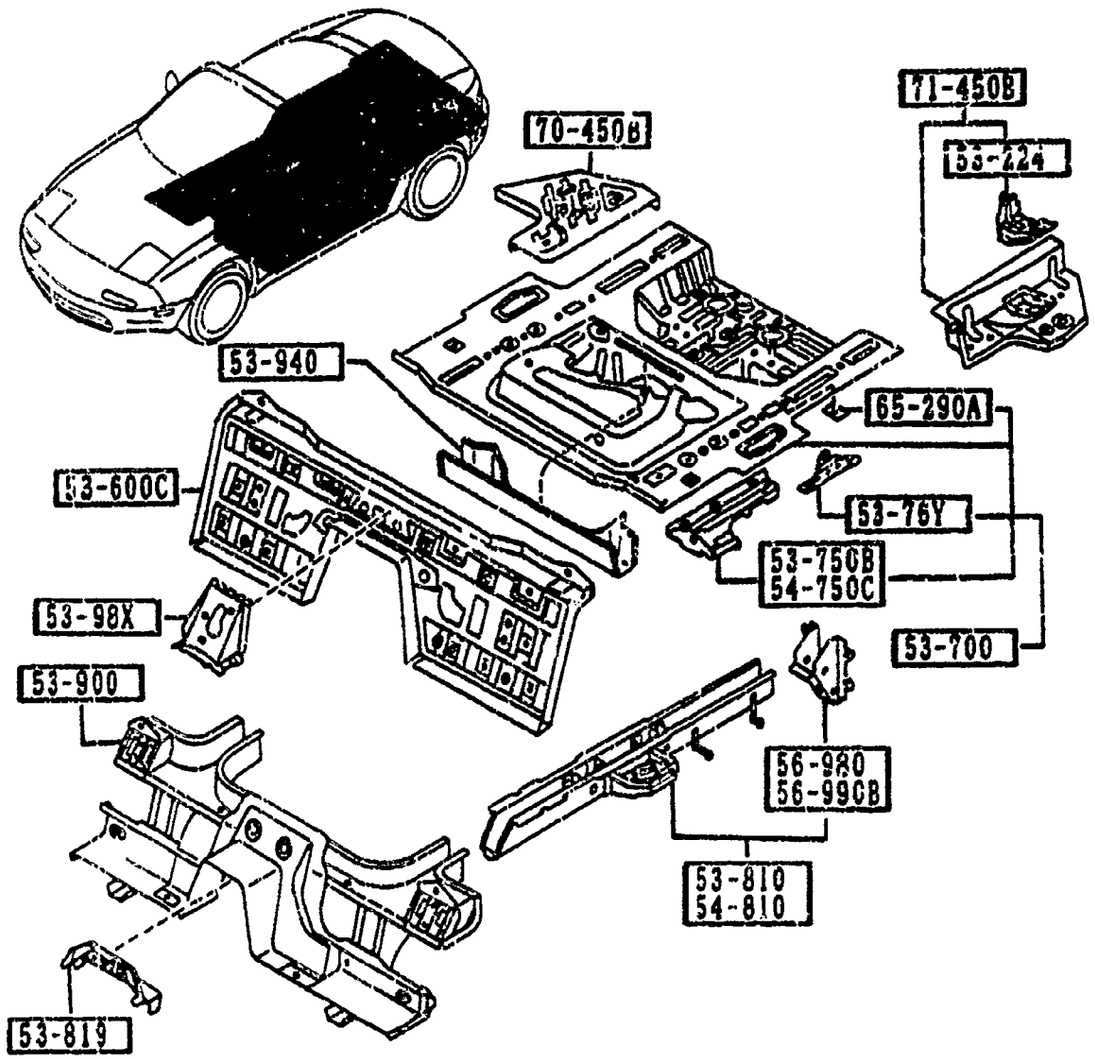

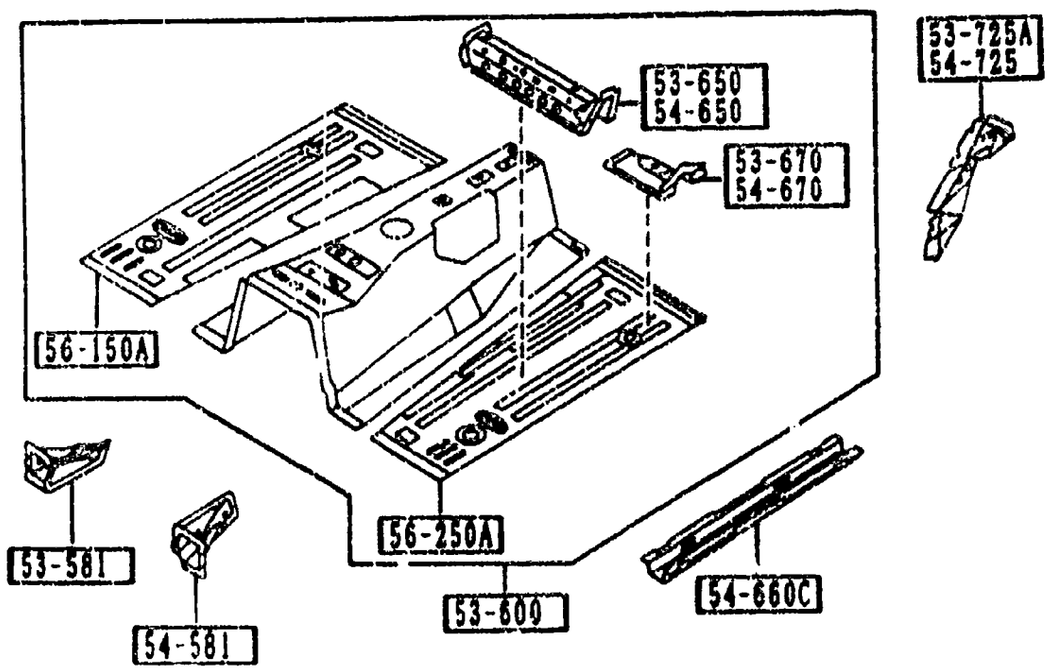

PART NO.	QTY	MODEL/RESTRICTION	MODEL/RESTRICTION	MODEL/RESTRICTION	FROM-TO
53-224 B455-53-750C	1	BRACKET,JACK			
53-581 NA01-53-482	1	JUNCTION(R),FRT. FLOOR			
53-600 NA01-53-600A	1	PAN,FLOOR-FRONT			
53-600C NA75-53-720	1	PAN,FLOOR-CENTER			
53-650 NA01-53-650	1	MEMBER NO.2(R),CROSS-FLOOR			
53-670 NA01-53-670	1	BRKT(R),SEAT-F.FLOOR PAN			
53-700 NA01-53-710B	1	PAN,FLOOR-REAR			
53-725A NA01-53-725A	1	GUSSET NO.3(R),C.FLOOR PAN			
53-750B NA01-53-750	1	PLATE(R),SIDE-REAR FLOOR			
53-76Y NA01-53-760	2	PLATE,NUT-TRUNK FLOOR PAN			
53-810 NA01-53-810F	1	FRAME(R),REAR SIDE			
53-819 NA01-53-819	1	BRACKET,PARKING CABLE-FLOOR			
53-900 NA75-53-900	1	MEMBER NO.3,CROSS			
53-940 NA01-53-931	1	MEMBER NO.4,CROSS			

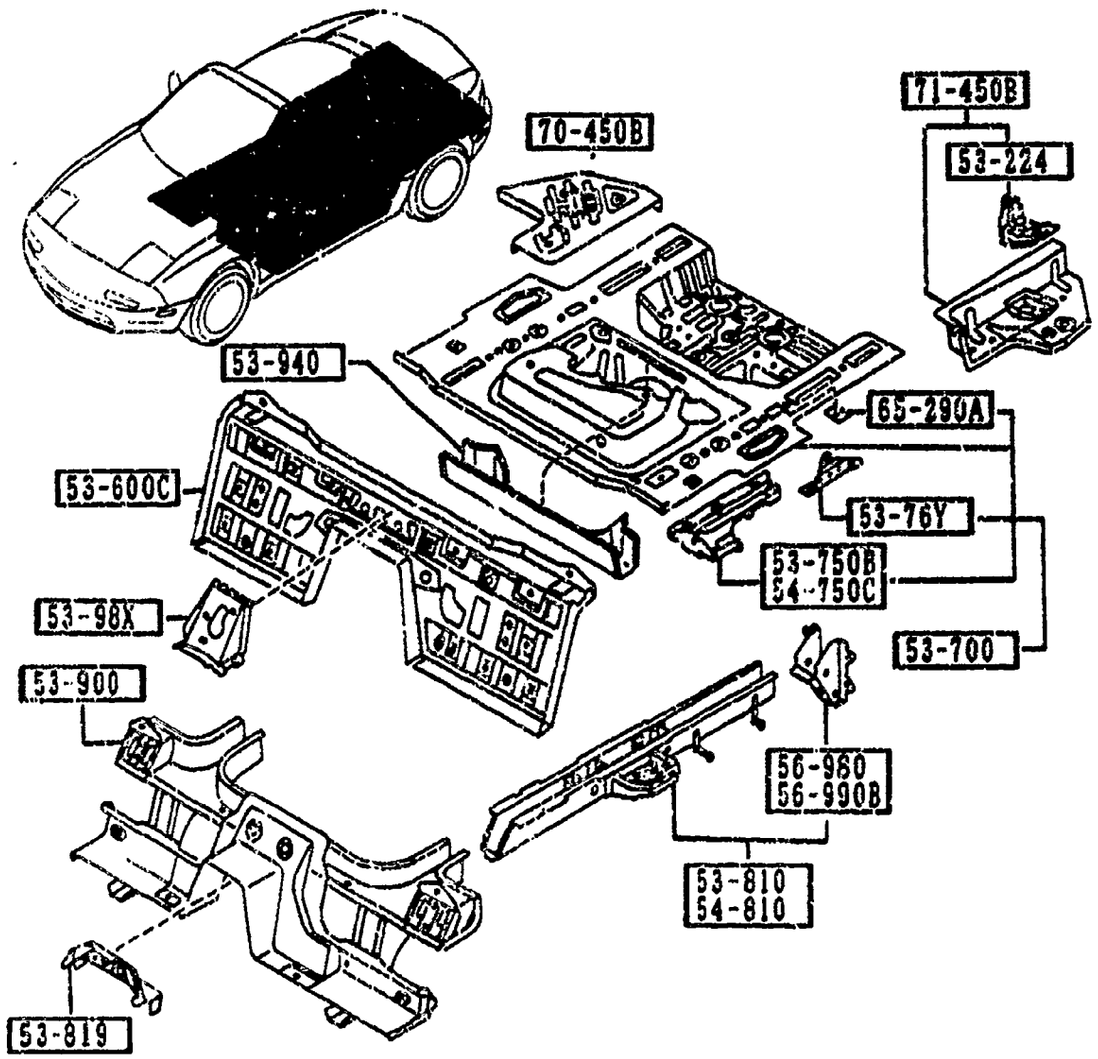

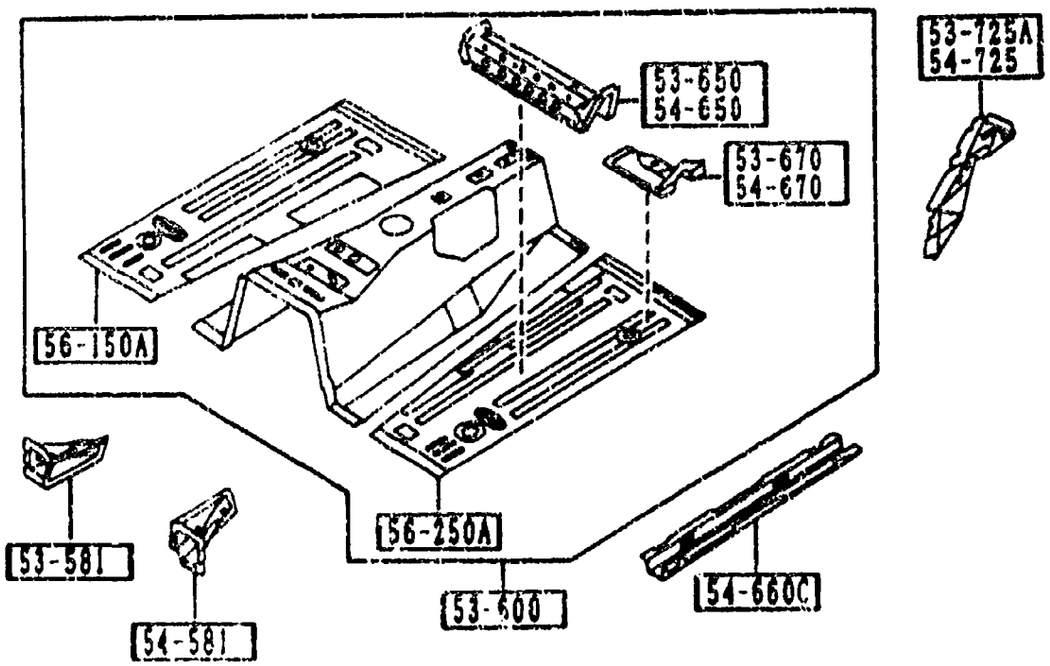

PART NO.	QTY	MODEL/RESTRICTION	MODEL/RESTRICTION	MODEL/RESTRICTION	FROM-TO
53-98X NA01-53-880A	1	GUSSET,FRONT FLOOR PAN			
54-581 NA01-54-482	1	JUNCTION(L),FRT. FLOOR			
54-650 NA01-54-650	1	MEMBER NO.2(L),CROSS-FLOOR			
54-660C NA01-54-660B	2	FRAME,FRONT-FRT FLOOR PAN			
54-670 NA01-54-670	1	BRKT(L),SEAT-F.FLOOR PAN			
54-725 NA01-54-725A	1	GUSSET NO.3(L),C.FLOOR PAN			
54-750C NA01-54-750	1	PLATE(L),SIDE-REAR FLOOR			
54-810 NA01-54-810F	1	FRAME(L),REAR SIDE			
56-150A NA01-53-602	1	PAN(R),FLOOR			
56-250A NA01-54-610	1	PAN(L),FLOOR			
56-980 NA01-53-830C	1	BRKT(R),BUMPER-RR SKIRT			
56-990B NA01-54-830C	1	BRKT(L),BUMPER-RR SKIRT			
65-290A 1353-65-190	1	BRACKET			
70-450B NA01-53-740C	1	PANEL(R),FLOOR SIDE			

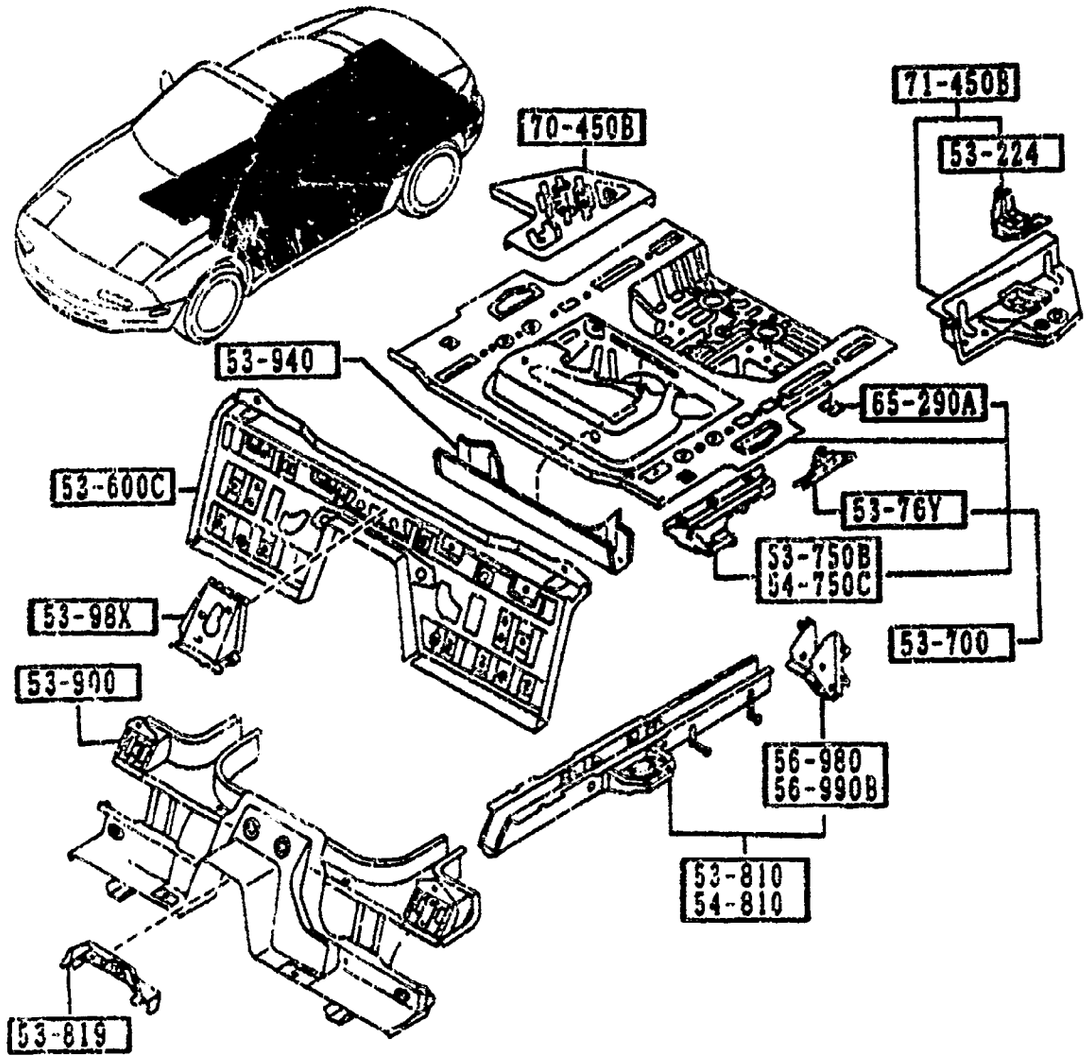

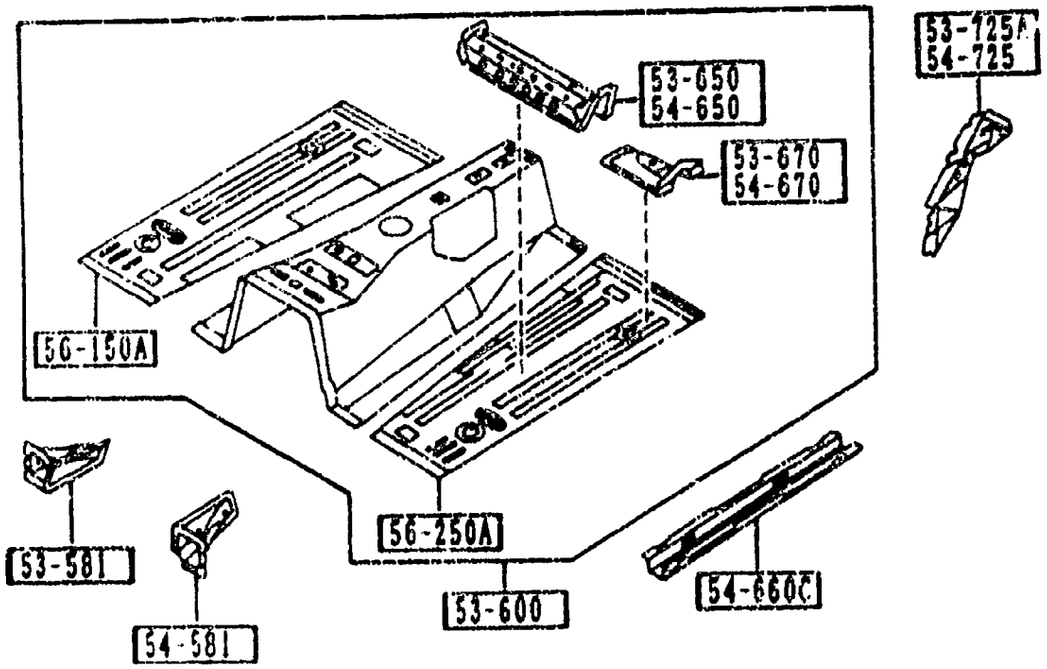

PART NO.	QTY	MODEL/RESTRICTION	MODEL/RESTRICTION	MODEL/RESTRICTION	FROM-TO
71-450B		PANEL(L),FLOOR SIDE			
NA01-54-740A	1				

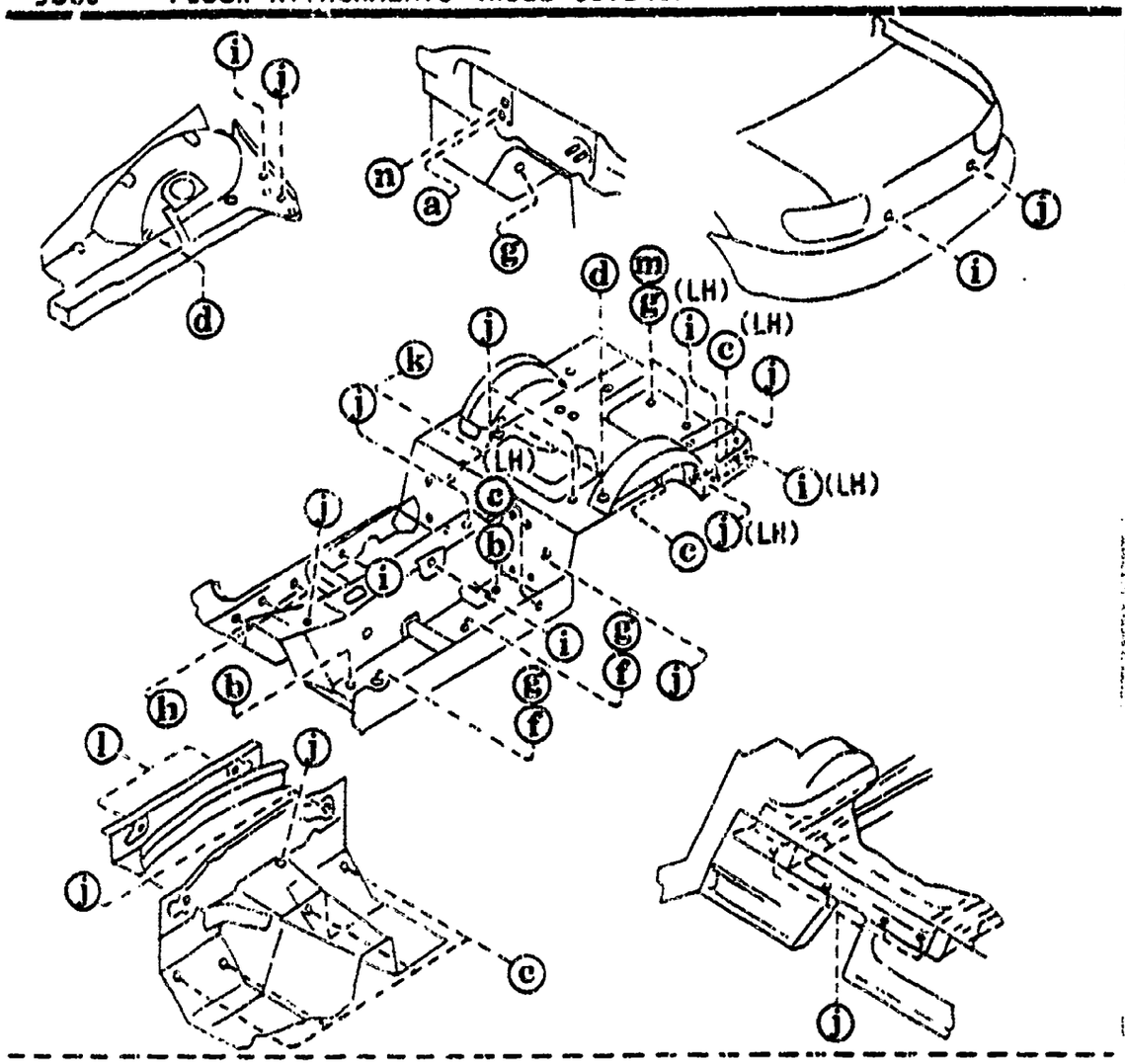

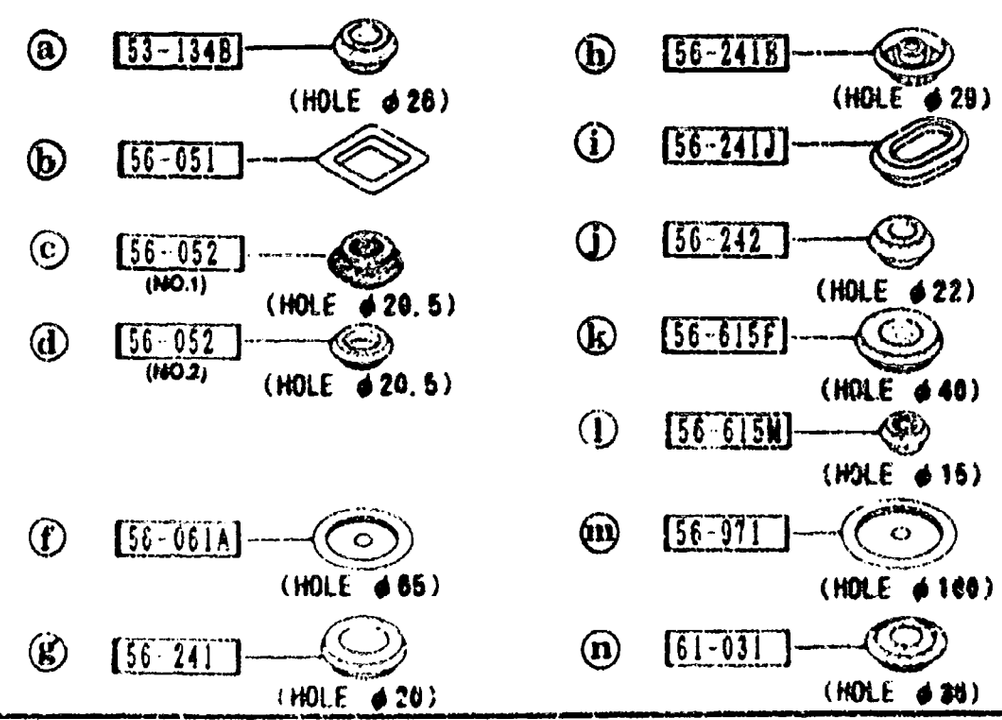

AUNA04

5380 -1 * FLOOR ATTACHMENTS (HOLE COVERS)

PART NO.	QTY	MODEL/RESTRICTION	MODEL/RESTRICTION	MODEL/RESTRICTION	FROM-TO
53-134B		RUBBER,DUST SEAL			
0187-53-134	1				
56-051		COVER,HOLE			
1011-56-051	4				
56-052		PLUG,DRAIN			
B092-56-052	8	D=12MM (ILLUST. NO.1)			
FB01-56-056	4	(ILLUST. NO.2) (W/O A.LOCK BRAKE)			
56-061A		COVER,HOLE			
8545-56-052	4				
56-241		PLUG,DRAIN			
0118-56-241	7				
56-241B		PLUG			
B001-56-051	6				
56-241J		PLUG,DRAIN			
8477-56-241	9				
56-242		PLUG,DRAIN			
0118-56-242B	19				
56-615F		PLUG,DRAIN			
0208-56-615	2				
56-615M		PLUG,DRAIN			
NA01-56-051	2				
56-971		COVER,HOLE			
8545-56-053	2				
61-031		PLUG,HOLE			
1708-61-031	1				

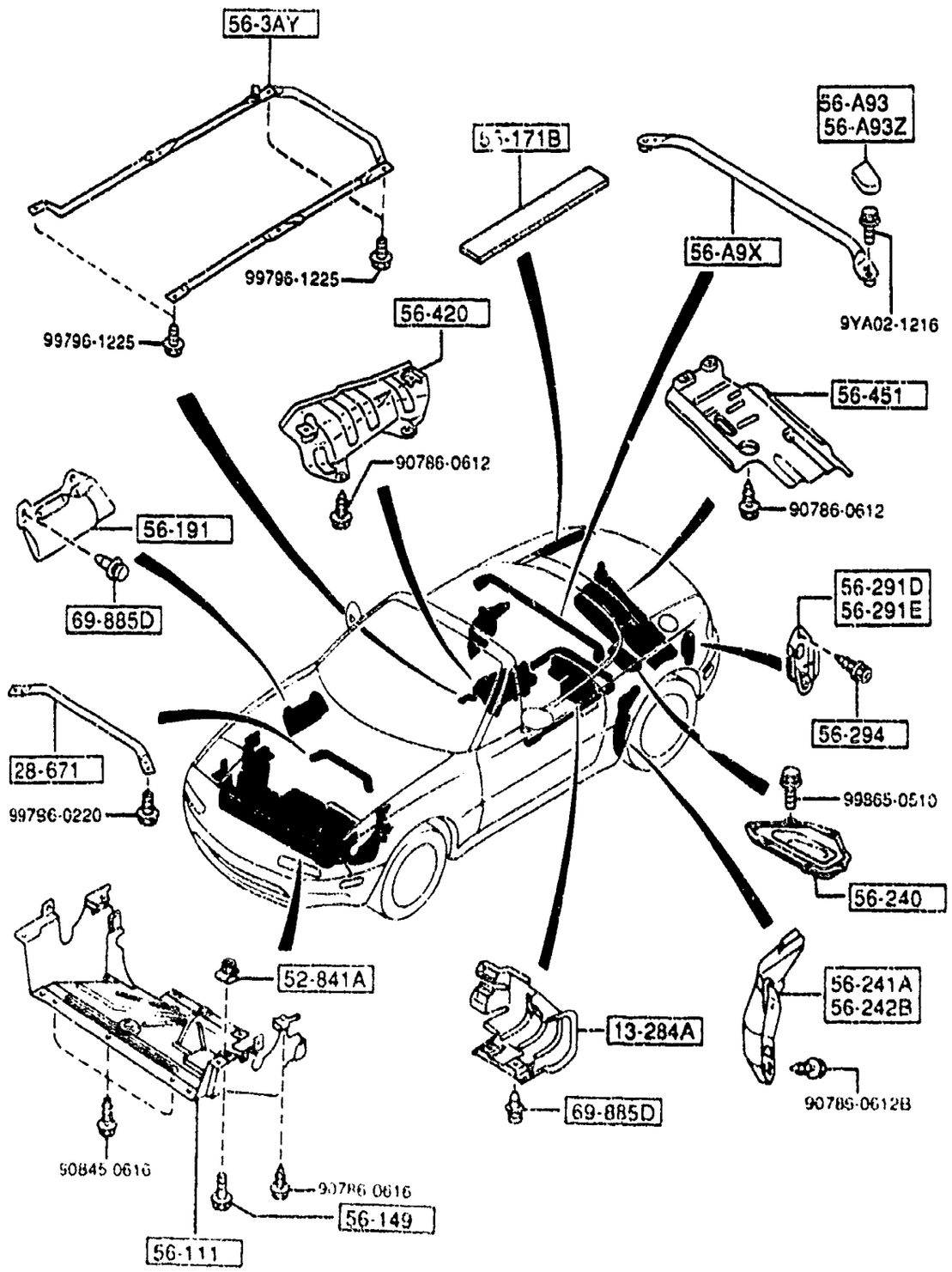

PART NO.	QTY	MODEL/RESTRICTION	MODEL/RESTRICTION	MODEL/RESTRICTION	FROM-TO
13-284A		COVER,FUEL FILTER			
NA75-56-241	1				
28-671		ROD,PERFORMANCE			
NA75-56-B91	1				
52-841A		NUT,CLIP			
B455-56-135	1				
56-A9X		BAR,BRACE			
NA75-56-A9XB	1				
56-A93		COVER(R),BRACE BAR			
NA75-56-A93	1				
56-A93Z		COVER(L),BRACE BAR			
NA75-56-A94	1				
56-111		COVER,UNDER			
NA01-56-111D	1				
56-149		SCREW,TAPPING-MUD GUARD			
B455-56-149	1				
56-171B		PROTECTOR(R),RR FENDER			
NA01-56-171A	1				
56-191		SHIELD,SPLASH			
NA01-56-112	1				
56-240		COVER			
NA75-56-06X	1				
56-241A		SHIELD(R),SPLASH-REAR			
NA01-56-311A	1				
56-242B		SHIELD(L),SPLASH-REAR			
NA01-56-321A	1				
56-291D		HOOK(R),TIE DOWN			
NA01-56-29XC	1				

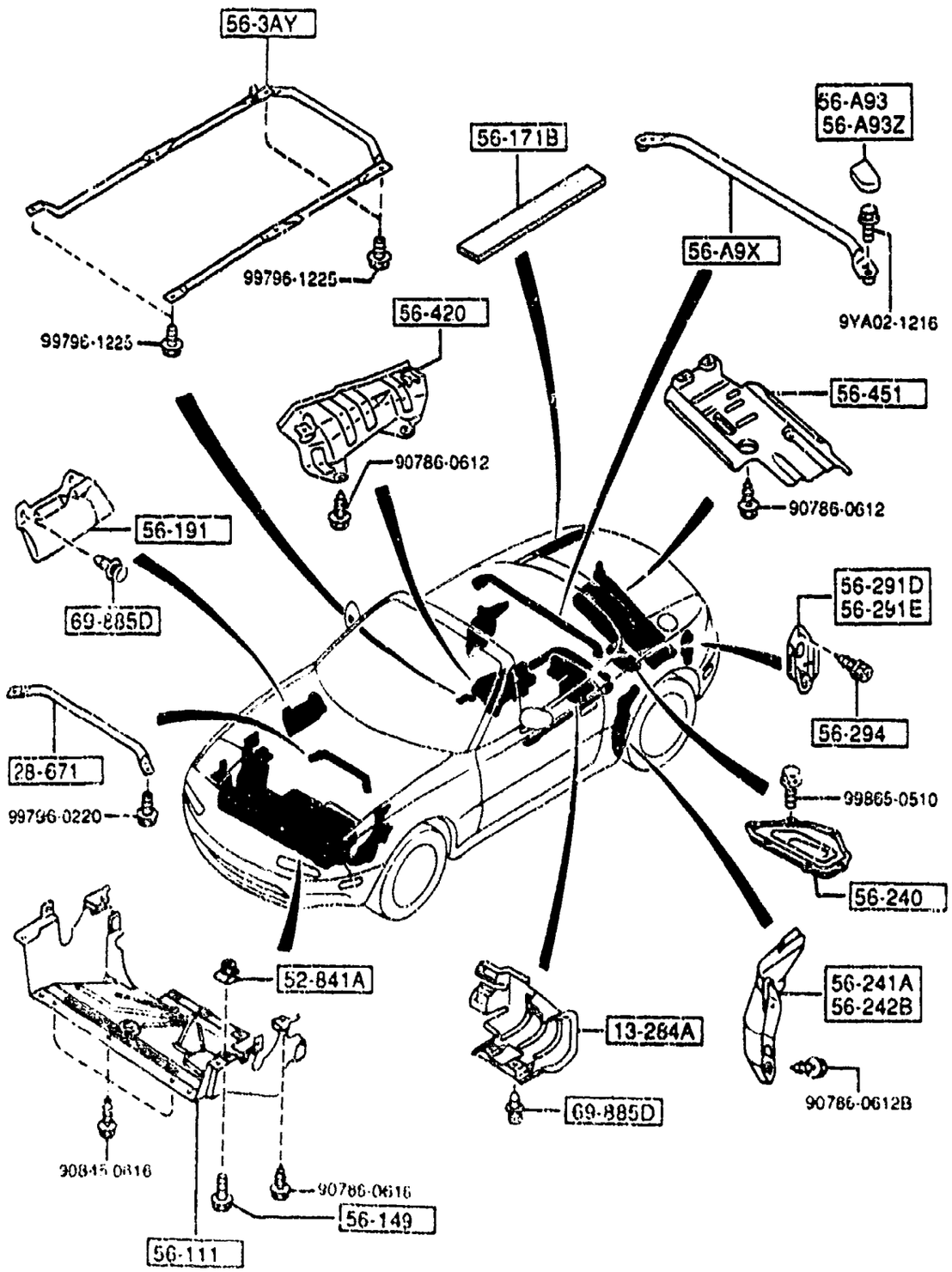

PART NO.	QTY	MODEL/RESTRICTION	MODEL/RESTRICTION	MODEL/RESTRICTION	FROM-TO
56-291E NA01-56-290C	1	HOOK(L),TIE DOWN			
56-294 NA01-56-294	4	SCREW,TIE DOWN HOOK			
56-3AY NA75-56-3AY	1	REINF.(L),FLOOR			
56-420 NA75-56-411	1	INSULATOR,FRONT			
56-451 NA01-56-451	1	INSULATOR			
69-885D NA01-56-145	7	FASTENER			

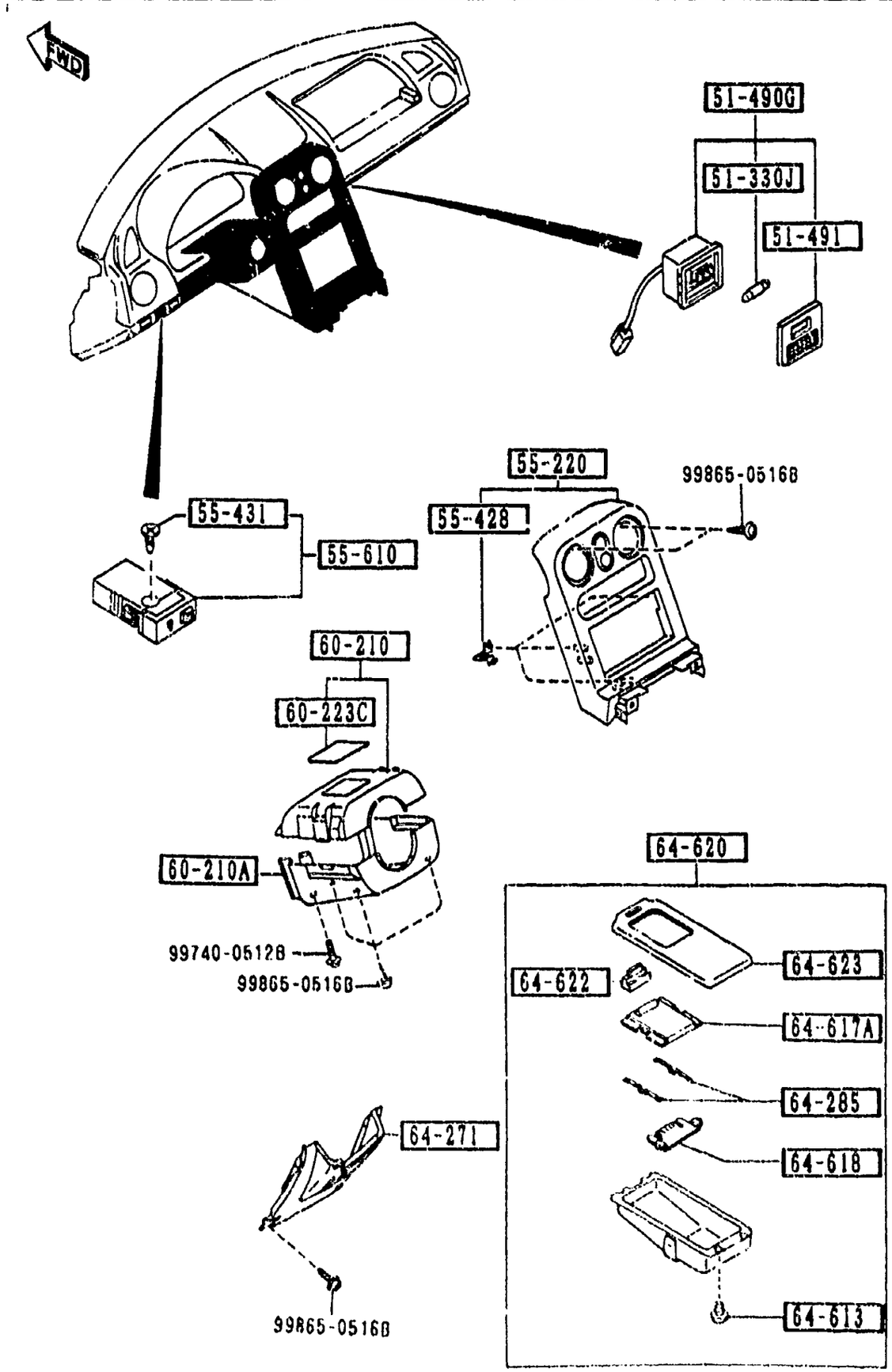

PART NO.	QTY	MODEL/RESTRICTION	MODEL/RESTRICTION	MODEL/RESTRICTION	FROM-TO
51-330J		BULB			
99701-5050	1	12V 5W			
51-490G		LAMP,PERSONAL			
NA01-51-490B	1				
00	INT-	NA3 NA5 NA4 NA6 BLACK			
51-491		LENS,PERSONAL LAMP			
H197-51-491A	1				
00	INT-	NA3 NA5 BLACK			
55-220		PANEL,CENTER			
NA75-55-210A	1				
00	INT-	NA3 NA4 NA5 NA6 BLACK			
55-428		SPRING,METER HOOD			
GJ21-55-428	3				
55-431		BULB,RESISTOR			
BR70-55-431	1				
55-610		RESISTOR,PANEL LIGHT			
BR70-55-490	1				
60-210		COVER,COLUMN-UPPER			
NA01-60-220	1				
00	INT-	NA3 NA5 NA4 NA6 BLACK			
60-210A		COVER,COLUMN-LOWER			
NA01-60-230A	1				
00	INT-	NA3 NA5 NA4 NA6 BLACK			
60-223C		CAP,COLUMN COVER			
NA01-60-223	1				
00	INT-	NA3 NA5 NA4 NA6 BLACK			

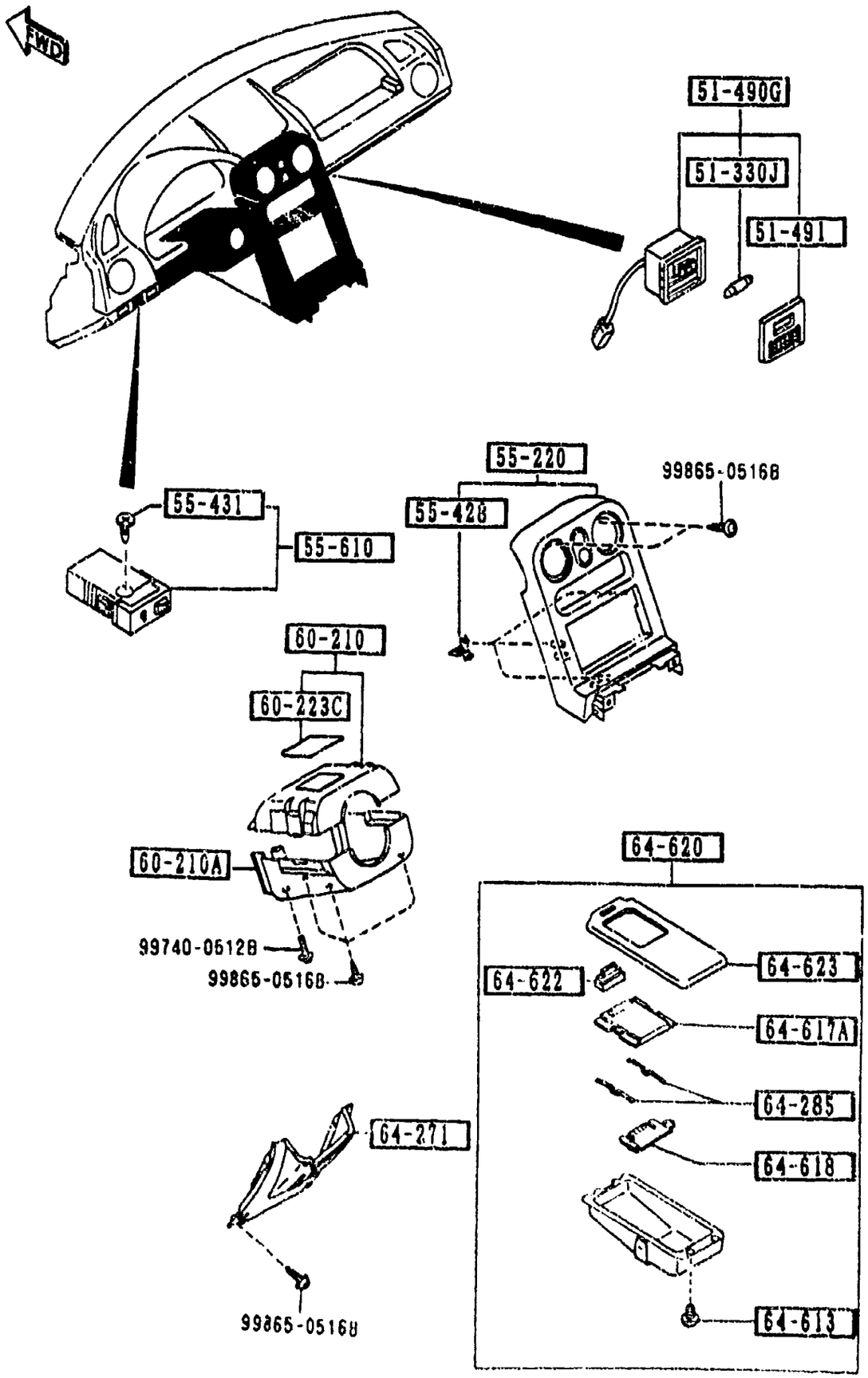

PART NO.	QTY	MODEL/RESTRICTION	MODEL/RESTRICTION	MODEL/RESTRICTION	FROM-TO
64-271		PANEL,CENTER-LOWER			
NA75-64-270A	1				-3923
00	INT-	NA3 BLACK			
88	INT-	NA4 NA5 TAN			
NA75-64-270B	1				3923-
00	INT-	NA3 BLACK			
88	INT-	NA4 NA5 TAN			
64-285		SPRING,ASHTRAY			
NA01-64-612	2				
64-613		SCREW,ASHTRAY			
NA01-64-613	4				
64-617A		LID,ASHTRAY			
NA01-64-617	1				
00	INT-	NA3 NA5 NA4 NA6 BLACK			
64-618		PLATE,ASHTRAY			
NA01-64-618	1				
64-620		TRAY,ASH			
NA01-64-610B	1				
00	INT-	NA3 NA5 NA4 NA6 BLACK			
64-622		LIGHT,PLATE-ASHTRAY			
NA01-64-622	1				
64-623		CASE'OUT',ASHTRAY			
NA01-64-623	1				
00	INT-	NA3 NA5 NA4 NA6 BLACK			

3923 NA3***-504494

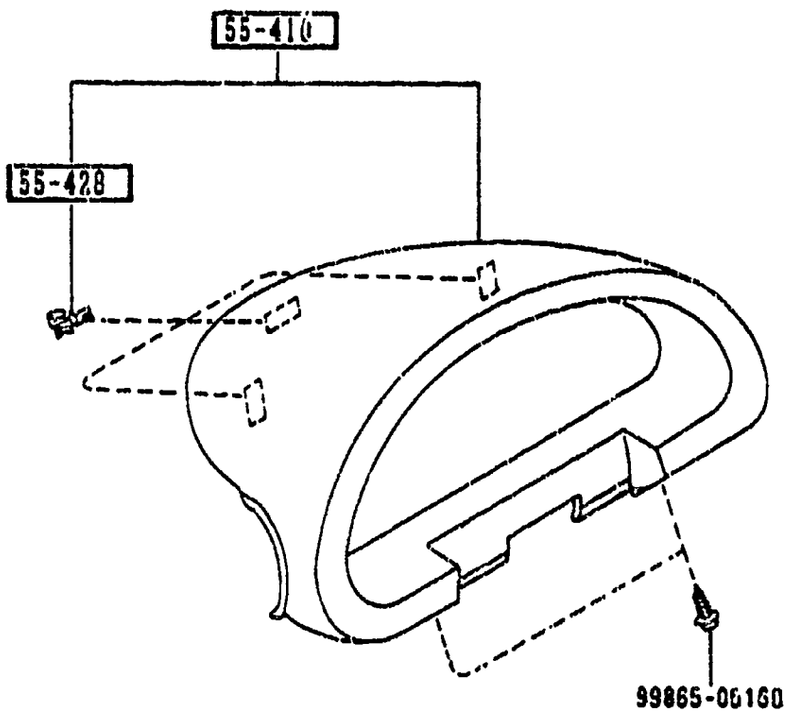

5520 -1 * METER HOOD

PART NO.	QTY	MODEL/RESTRICTION	MODEL/RESTRICTION	MODEL/RESTRICTION	FROM-TO
+----------+					
| 55-410 |		HOOD,METER			
+----------+					
NA75-55-420B	1	BASE, PKG-A, PKG-B, PKG-R, (INSTRUMENT PANEL-BLACK)			
00	INT-	NA3 NA4 NA5 BLACK			
NA79-55-420B	1	PKG-C, (INSTRUMENT PANEL-TAN)			
00	INT-	NA4 NA5 BLACK			
+----------+					
| 55-428 |		SPRING,METER HOOD			
+----------+					
GJ21-55-428	3				

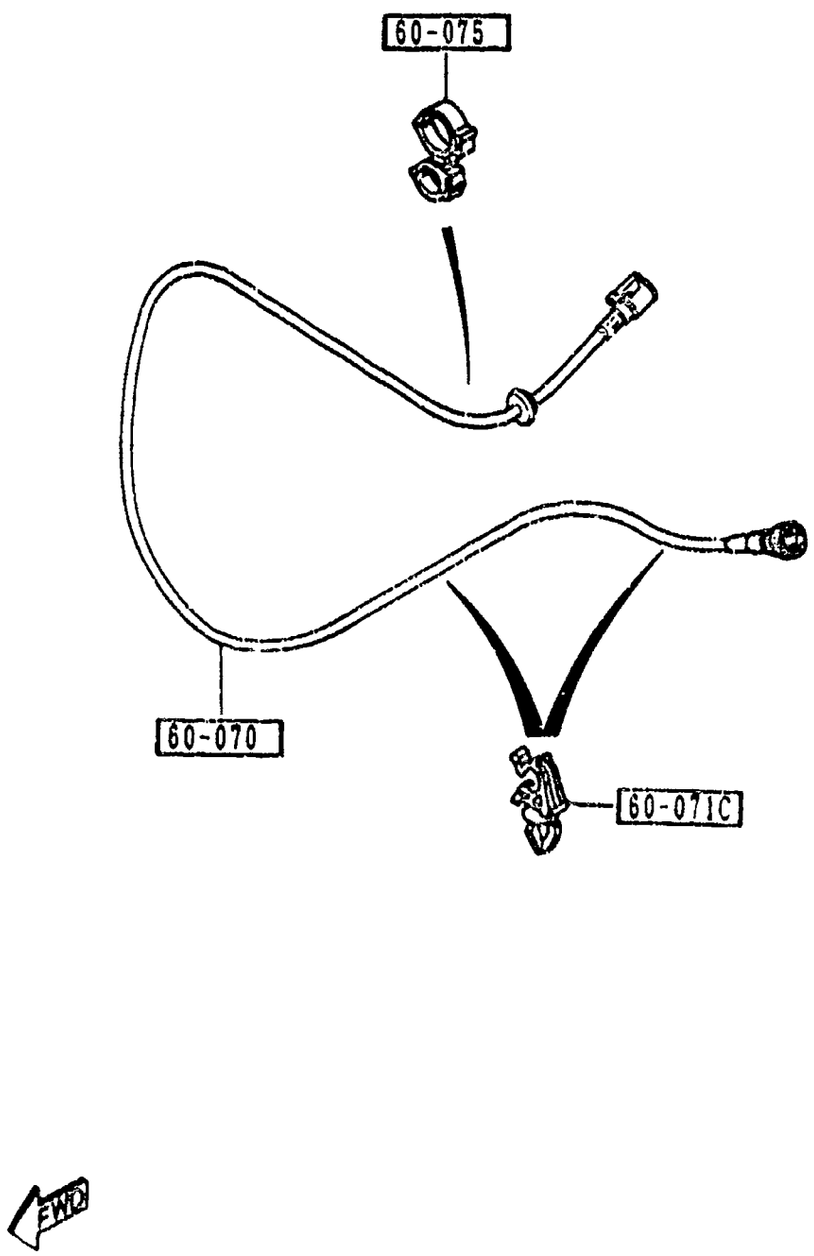

5530 -1 M SPEEDOMETER CABLE

PART NO.	QTY	MODEL/RESTRICTION	MODEL/RESTRICTION	MODEL/RESTRICTION	FROM-TO
60-070		CABLE,SPEEDOMETER			
NA01-60-070B	1	(MT)			
NA03-60-070A	1	(AT)			
60-071C		CLIP			
NA03-60-071	2				
60-075		CLIP'A',SPEEDOMETER CABLE			
NA01-60-075	1				

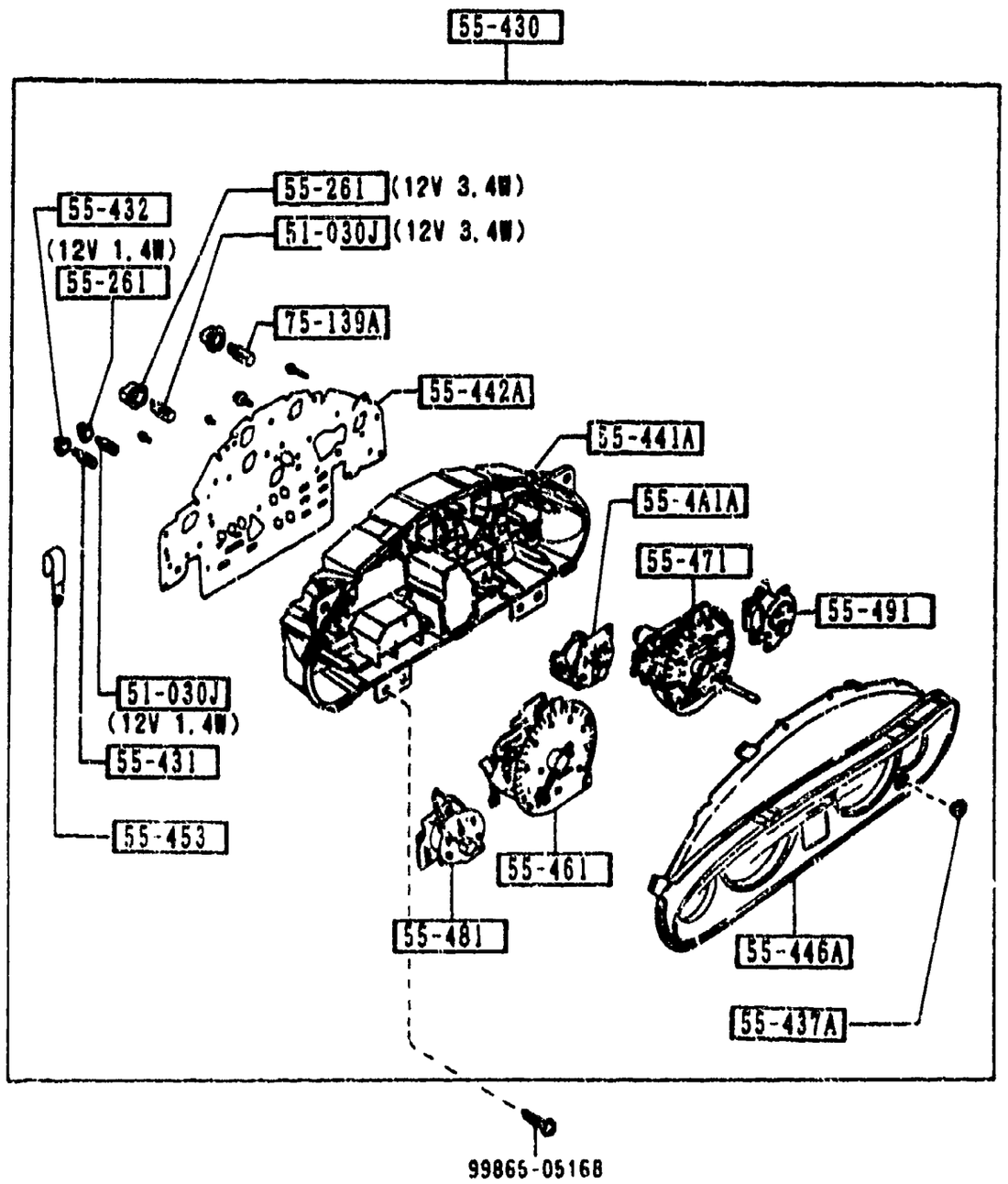

PART NO.	QTY	MODEL/RESTRICTION	MODEL/RESTRICTION	MODEL/RESTRICTION	FROM-TO
51-030J		BULB			
3625-75-139	8	12V 1.4W,FOR WARNING			
99701-6050	3	12V 3.4W			
55-261		SOCKET			
1316-55-261	3	12V 3.4W			
8548-55-261	8	12V 1.4W BLACK			
55-4A1A		METER,OIL PRESSURE			
NA01-55-4A1	1				
55-430		METER SET			
NA75-55-430A	1				
55-431		BULB,RESISTOR			
NA01-55-431	1				
55-432		SOCKET,METER SET			
NA01-55-432	1				
55-437A		GROMMET,KNOB-METER SET			
NA01-55-437	1				
55-441A		CASE,METER			
NA01-55-441C	1				
55-442A		PLATE,PRINT			
NA75-55-442	1				
55-446A		PLATE,WINDOW			
NA01-55-446B	1				
55-453		CLAMP			
N007-55-467	1				
55-461		TACHOMETER			
NA75-55-461	1				

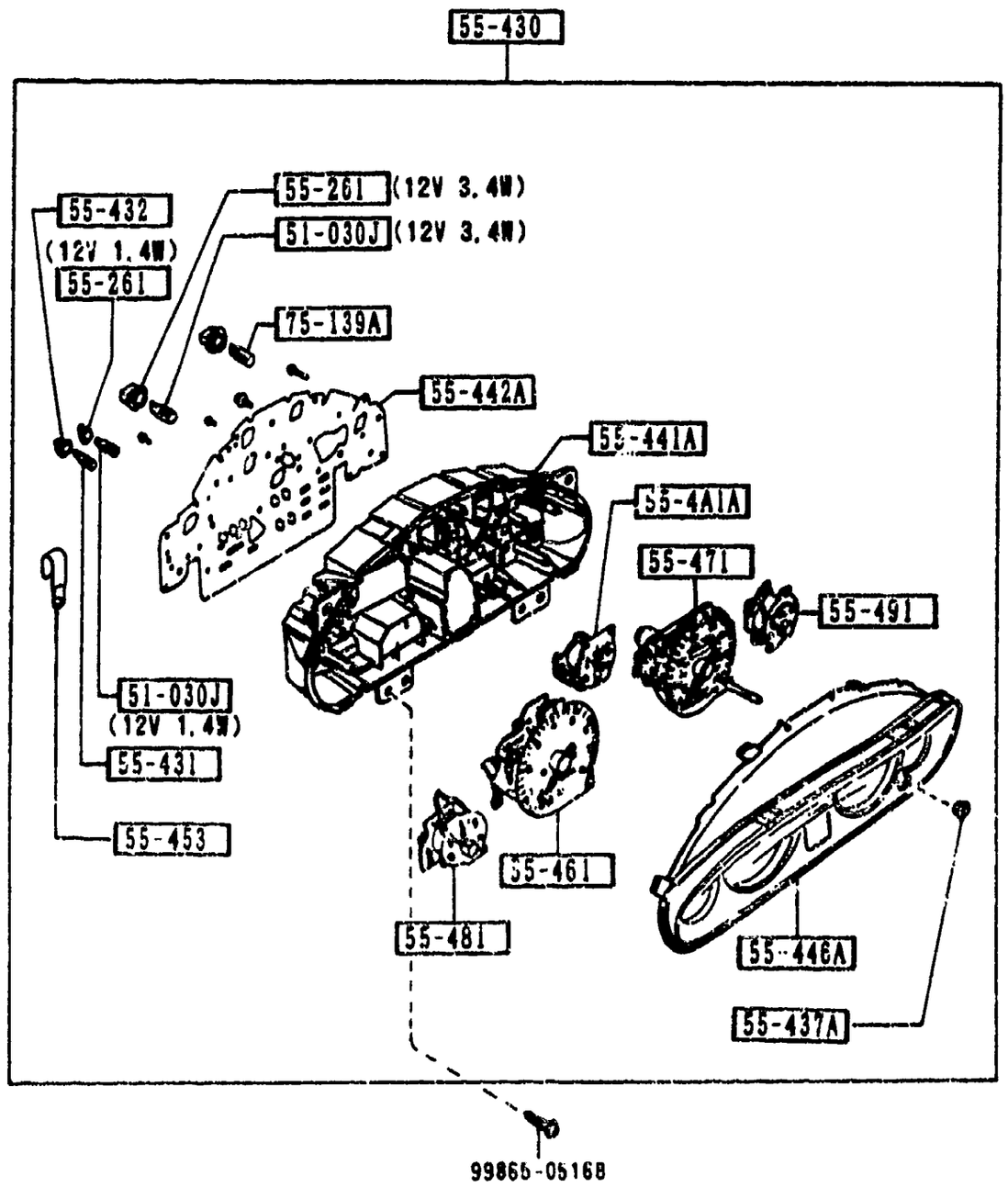

PART NO.	QTY	MODEL/RESTRICTION	MODEL/RESTRICTION	MODEL/RESTRICTION	FROM-TO
55-471		SPEEDOMETER			
NA01-55-471B	1				
55-481		METER,FUEL			
NA01-55-481	1				
55-491		METER,TEMP			
NA75-55-491	1				
75-139A		BULB			
B491-55-431	4				

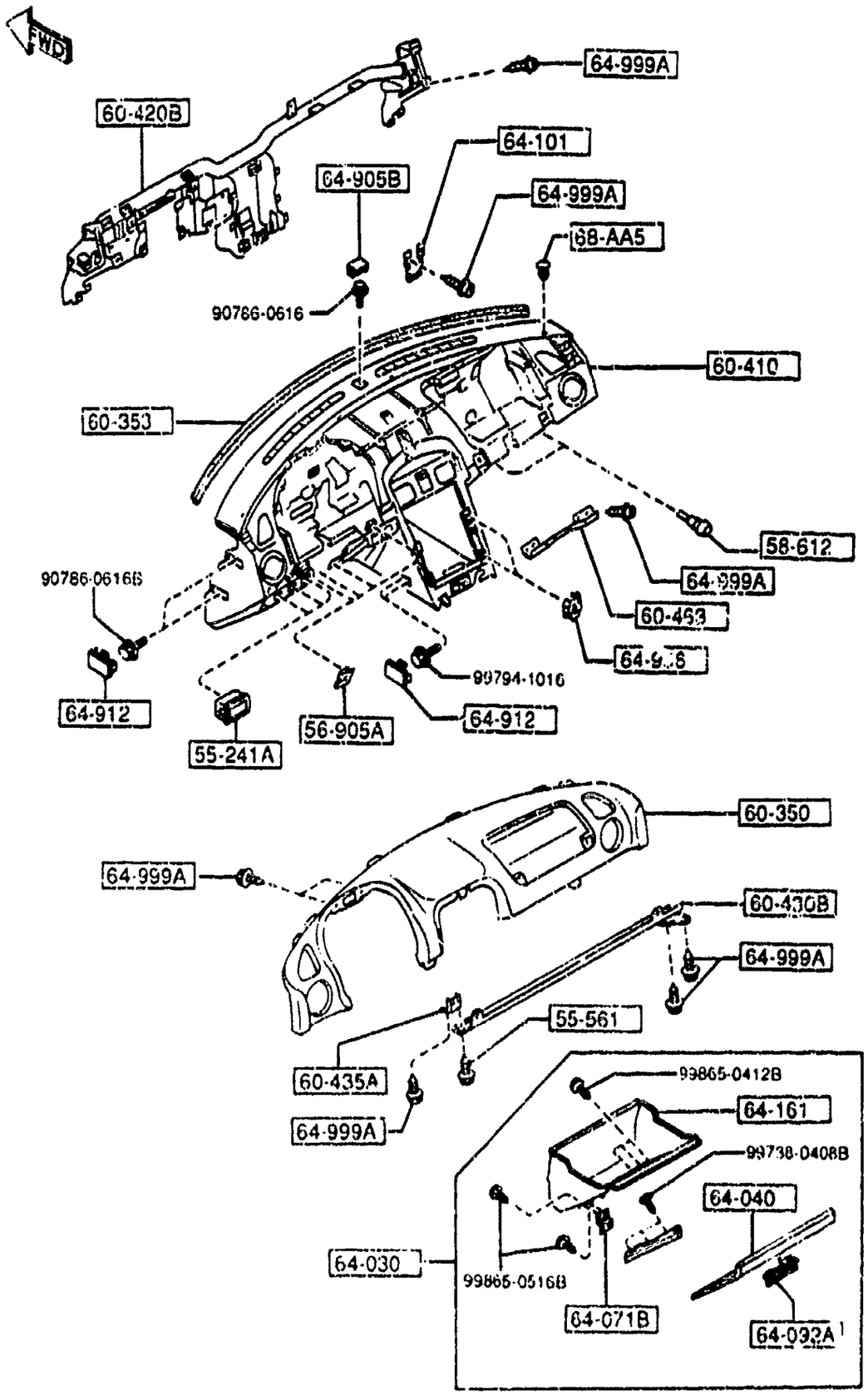

PART NO.	QTY	MODEL/RESTRICTION	MODEL/RESTRICTION	MODEL/RESTRICTION	FROM-TO
55-241A		BOX,INSTRUMENT PANEL			
NA01-55-241A	3				
00	INT-	NA3 NA5 NA4 NA6 BLACK			
55-561		BOLT,INST. PANEL			
B455-55-561	1				
56-905A		NUT,SPRING			
B092-60-408	4				
58-612		CUSHION,RUBBER			
B092-64-046	2				
60-350		PAD,CRASH			
NA75-60-350B	1				
00	INT-	NA3 NA4 NA5 NA6 BLACK			
60-353		RUBBER,URETHNE			
NA75-60-353	1				
60-410		FRAME,INST. PANEL			
NA75-60-401B	1	BASE, PKG-A, PKG-B, PKG-R, (INSTRUMENT PANEL-BLACK)			-3923
00	INT-	NA3 BLACK			
NA79-60-401B	1	PKG-C, (INSTRUMENT PANEL-TAN)			-3923
88	INT-	NA4 NA5 BLACK/TAN			
NA75-60-401C	1	BASE, PKG-A, PKG-B, PKG-R, (INSTRUMENT PANEL-BLACK)			3923-3A01
0C	INT-	NA3 BLACK			
NA79-60-401C	1	PKG-C, (INSTRUMENT PANEL-TAN)			3923-3A01
8J	INT-	NA4 NA5 BLACK/TAN			
NA75-60-401C	1				3A01-3B17

3923 NA3**-504494
3A01 NA3**-505179
3B17 NA3**-506950

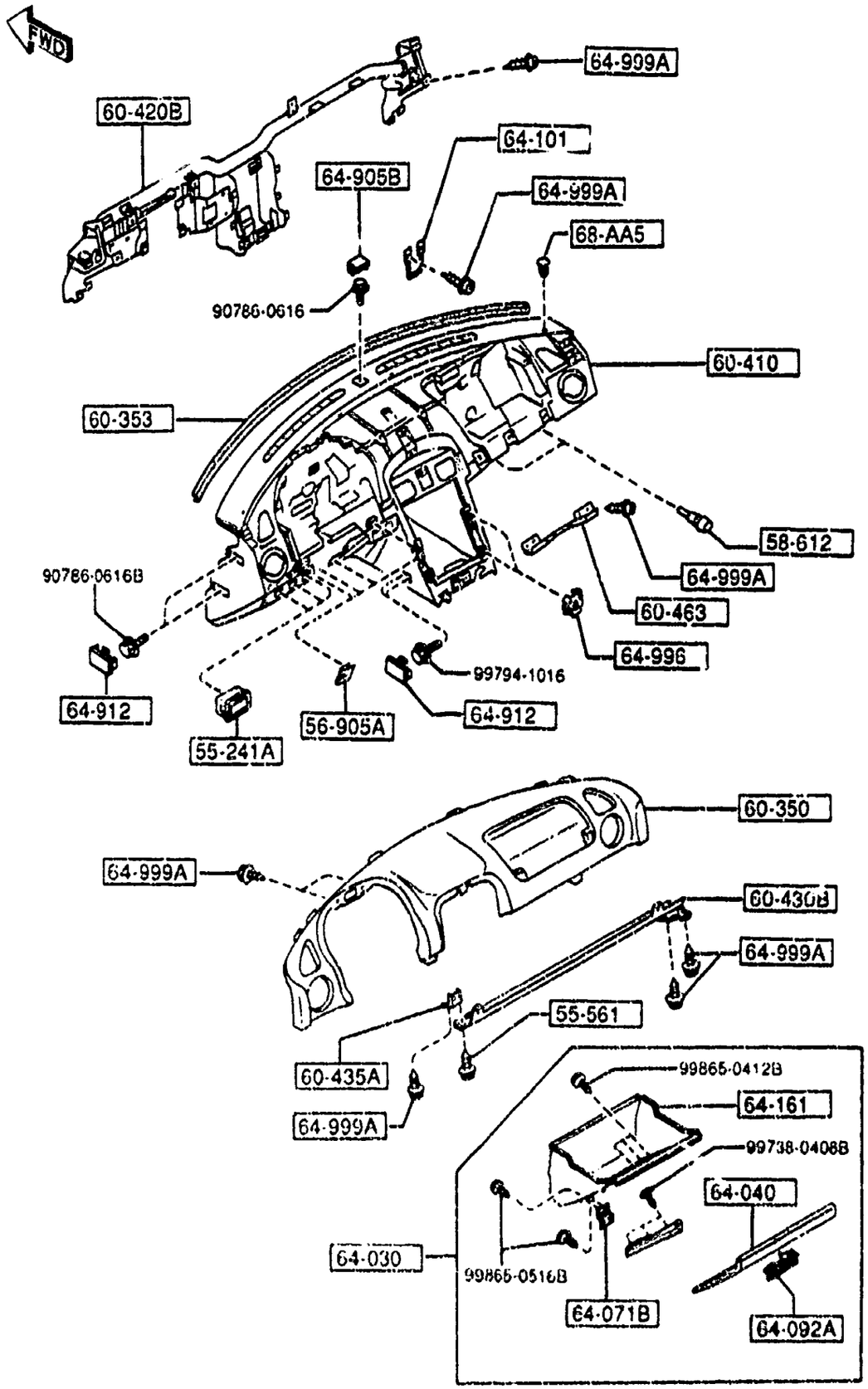

PART NO.	QTY	MODEL/RESTRICTION	MODEL/RESTRICTION	MODEL/RESTRICTION	FROM-TO
CONT'D					
00	INT-	NA3 BLACK			
88	INT-	NA5 BLACK/TAN			
NA75-60-401D	1				3B17-
00	INT-	NA3 BLACK			
88	INT-	NA5 NA4 BLACK/TAN			
+---------+ | 60-420B | +---------+		MEMBER,CRASH PAD			
NA75-60-420A AN(NA75-60-420B)	1				-3B17
NA75-60-420B	1				3B17-
+---------+ | 60-430B | +---------+		MEMBER(R),INST. PANE L			
NA75-60-430	1				
+---------+ | 60-435A | +---------+		BRACKET,MEMBER			
NA01-60-435	1				
+---------+ | 60-463 | +---------+		BRACKET,CRASH PAD			
NA01-60-463	1				
+---------+ | 64-030 | +---------+		BOX,GLOVE			
NA75-64-030C	1				
00	INT-	NA3 BLACK			
88	INT-	NA4 NA5 TAN			
+---------+ | 64-040 | +---------+		LID,GLOVE BOX-OUTER			
NA75-64-041C	1				
00	INT-	NA3 BLACK			
88	INT-	NA4 NA5 TAN			
+---------+ | 64-071B | +---------+		HINGE(R),GLOVE LID			
NA75-64-03XA	2				
+---------+ | 64-092A | +---------+		LOCK,GLOVE LID			
BC5E-64-090	1				-4520
00	INT-	NA3 BLACK			
67	INT-	NA5 NA4 TAN			
+---------+ | 64-101 | +---------+		STRIKER			

3B17 NA3###-506950

5560 -3 K DASHBOARD & RELATED PARTS

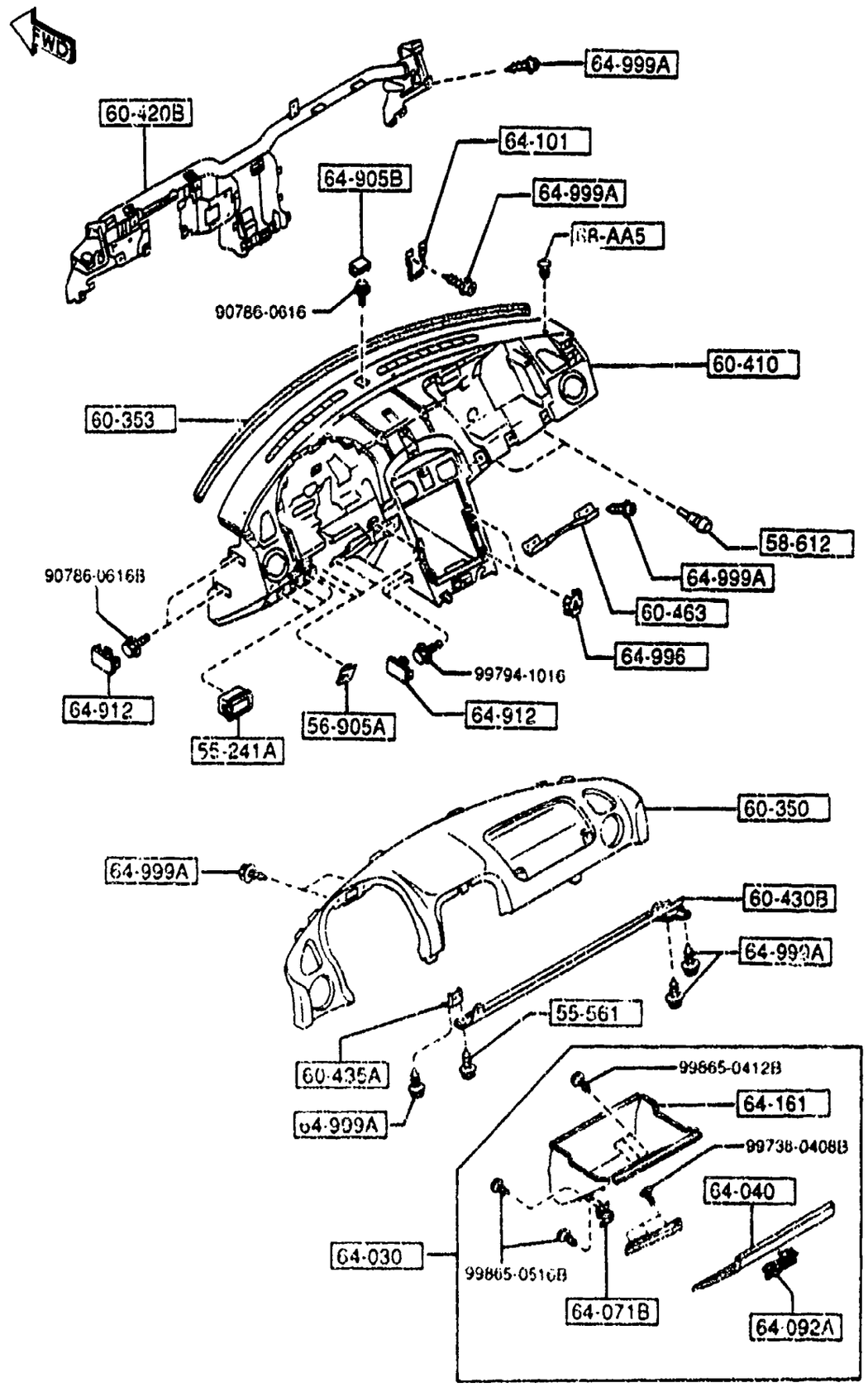

PART NO.	QTY	MODEL/RESTRICTION	MODEL/RESTRICTION	MODEL/RESTRICTION	FROM-TO
CONT'D					
BC1D-64-101	1				
+---------+ | 64-161 | +---------+		BOX,GLOVE			
NA75-64-161C	1				
00	INT-	NA3 NA4 NA5 NA6 BLACK			
+---------+ | 64-905B | +---------+		COVER,HOLE-(C)			
NA01-64-905	1	BASE, PKG-A, PKG-B, PKG-R, (INSTRUMENT PANEL-BLACK)			-3A01
00	INT-	NA3 NA5 NA4 BLACK			
N002-64-905	1	PKG-C, (INSTRUMENT PANEL-TAN)			-3A01
00	INT-	NA5 NA4 BLACK			
NA01-64-905	1				3A01-
C0	INT-	NA3 NA5 NA4 BLACK			
+---------+ | 64-912 | +---------+		COVER,SIDE			
NA01-64-912	6				
00	INT-	NA3 BLACK			
8C	INT-	NA5 NA4 TAN			
+---------+ | 64-996 | +---------+		NUT,EXPANSION			
GJ21-64-996	4				
+---------+ | 64-999A | +---------+		SCREW,TAPPING			
W201-64-999	34				
+---------+ | 68-AA5 | +---------+		FASTENER,DOOR TRIM			
W201-68-AA5A	4				
00	INT-	NA3 NA5 NA4 NA6 BLACK			

3A01 NA3NNN-505179

5570 CONSOLE

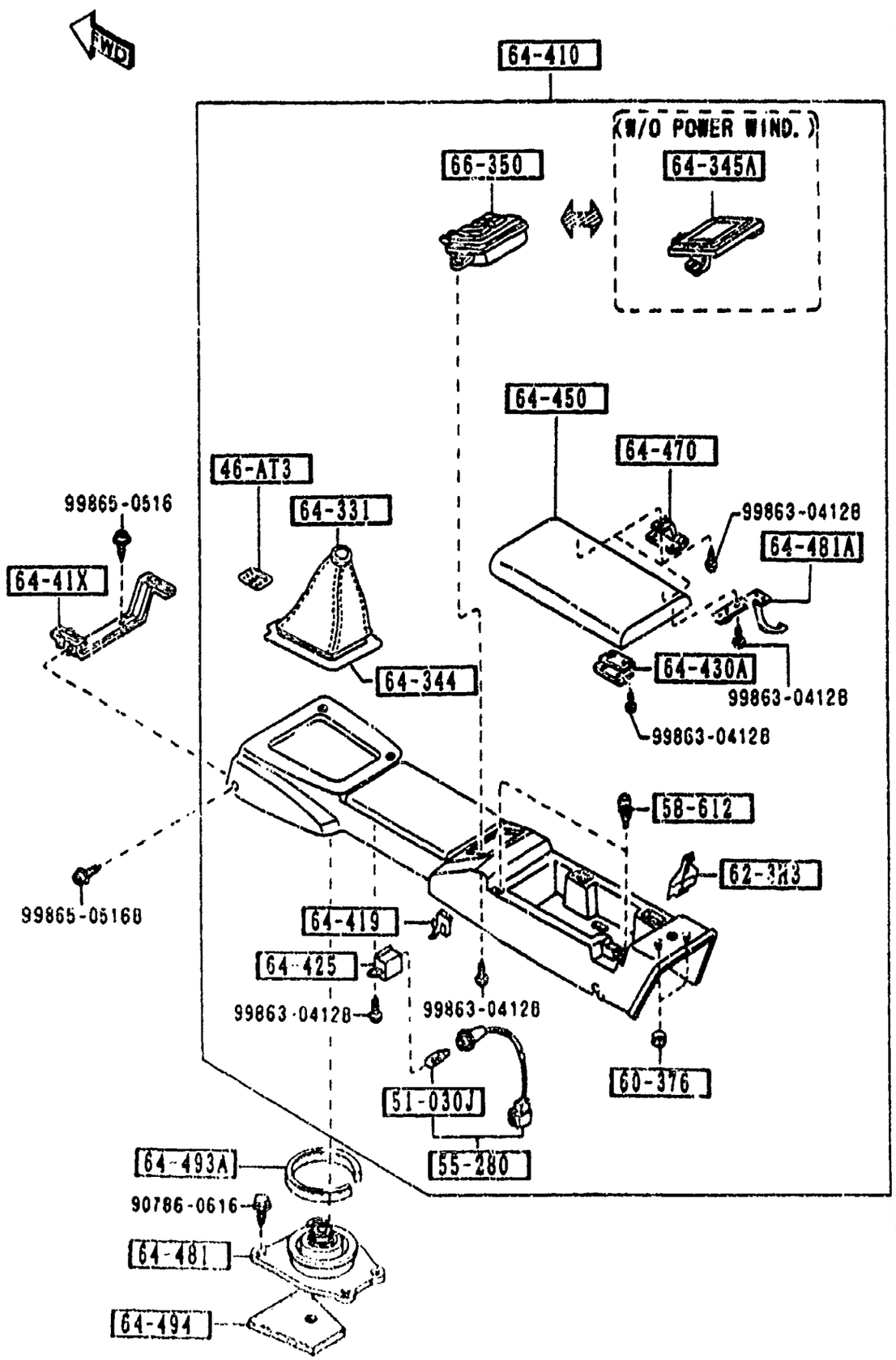

PART NO.	QTY	MODEL/RESTRICTION	MODEL/RESTRICTION	MODEL/RESTRICTION	FROM-TO
46-AT3		LABEL,CHANGE			
N002-46-AT3	1	(WOOD)			
51-030J		BULB			
3625-75-139	1	12V 1.4W,FOR WARNING			
55-280		BULB & SOCKET			
NA01-55-280	1	(MT)			
NA06-55-280	1	(AT)			
58-612		CUSHION,RUBBER			
B092-64-046	2				
60-376		NUT,TOP-CRASH PAD			
B092-60-376	2				
62-3H3		COVER,LEVER-OPENER			
NA01-64-424	1				
64-331		BOOT,CHANGE			
NA01-64-331	1	(MT)			
00	INT-	NA3 NA5 NA4 NA6 BLACK			
64-344		PLATE,BACK-BOOTS RING			
NA01-64-344B	1	(MT)			
64-345A		BOX,COIN-CONSOLE			
NA01-64-437	1	BASE, PKG-A, PKG-R, (W/O POWER WIND.)			
00	INT-	NA3 NA5 NA4 NA6 BLACK			
64-41X		BRACKET,REAR CONSOLE			
NA01-64-416	1				
64-410		CONSOLE,REAR			
NA01-64-410D	1	BASE, PKG-A, (W/O P.WIND,W/O CHANGE LABEL) (MT)			
00	INT-	NA3 NA5 NA4 NA6			

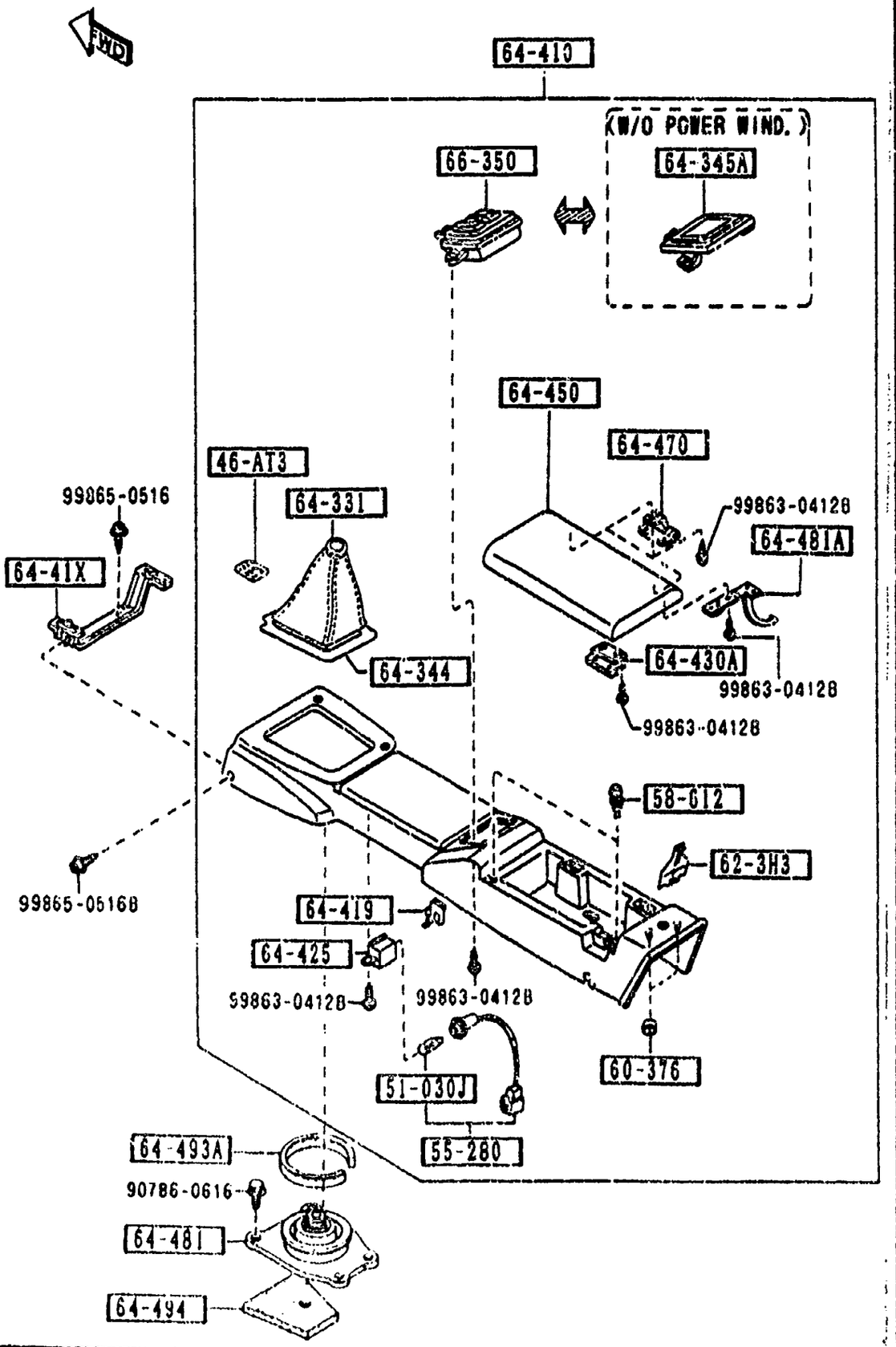

AUNA04

PART NO.	QTY	MODEL/RESTRICTION	MODEL/RESTRICTION	MODEL/RESTRICTION	FROM-TO
CONT'D					
		BLACK			
NA02-64-410D	1	PKG-B, PKG-C, RICO-O PT-PKG, (W/P.WIND,W/O CHANGE LABEL) (MT)			
00	INT-	NA3 NA5 NA4 NA6 BLACK			
NA03-64-410C	1	BASE, PKG-A, PKG-E, (W/O POWER WIND.) (AT)			
00	INT-	NA3 NA5 NA4 NA6 BLACK			
NA06-64-410D	1	PKG-B, PKG-C, RICO-O PT-PKG, (W/POWER WIND.) (AT)			
00	INT-	NA3 NA5 NA4 NA6 BLACK			
N007-64-410B	1	OPT, (W/O P.WIND,W/CHANGE LABEL) (MT)			
00	INT-	NA3 NA5 NA4 NA6 BLACK			
N008-64-410B	1	OPT, (W/P.WIND,W/CHANGE LABEL) (MT)			
00	INT-	NA3 NA5 NA4 NA6 BLACK			
64-419		CLIP,HARNESS-HAND BRAKE			
H260-64-419	1				
64-425		CASE,LAMP			
NA01-64-414	1				
64-430A		LOCK,CONSOLE-REAR			
FB01-64-430	1				
64-450		LID,CONSOLE			
NA01-64-450A	1				
00	INT-	NA3 NA5 NA4 NA6 BLACK			
64-470		HINGE			

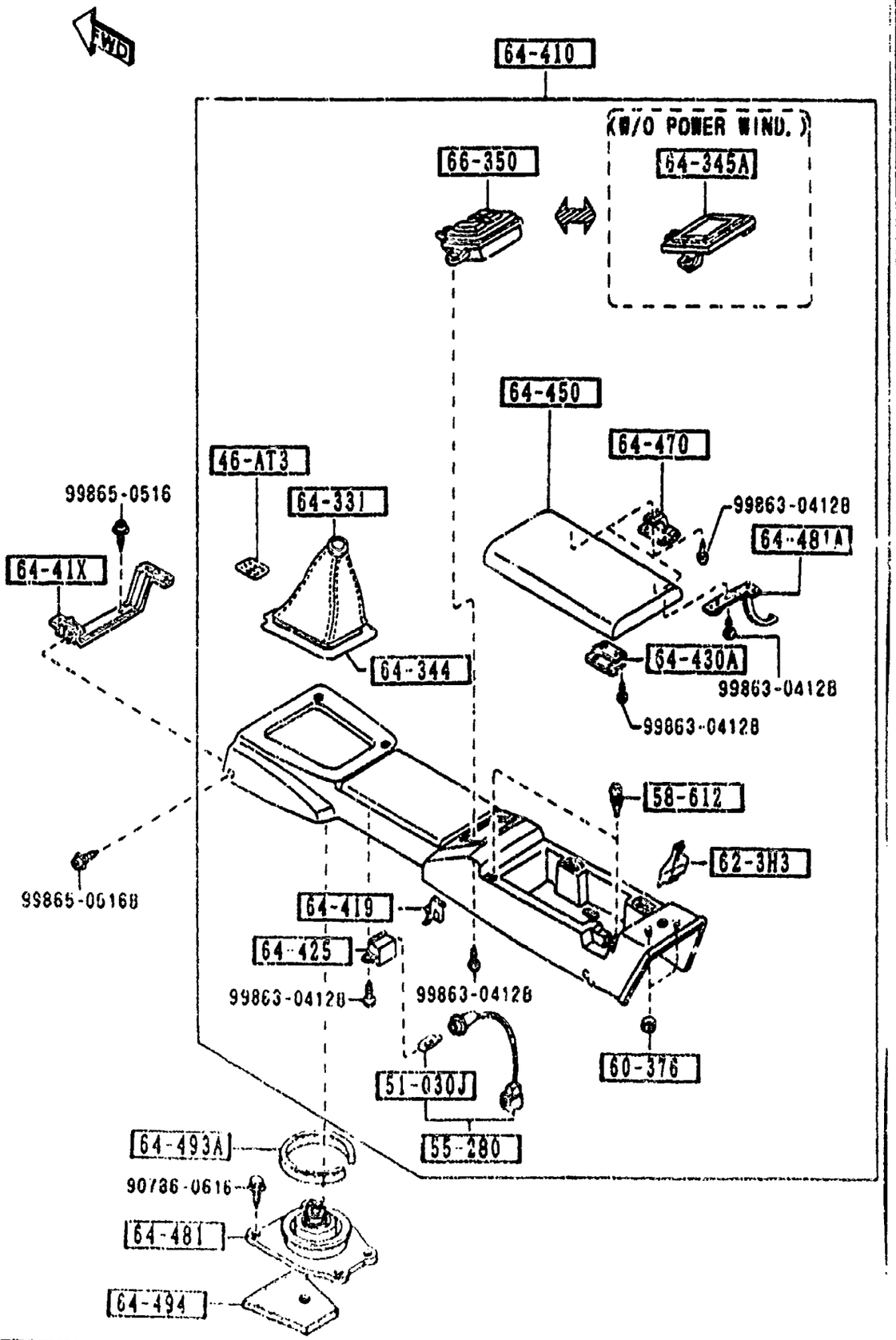

AUNA04

PART NO.	QTY	MODEL/RESTRICTION	MODEL/RESTRICTION	MODEL/RESTRICTION	FROM-TO
CONT'D					
NA01-64-45XA	2				
00 INT-		NA3 NA5 NA4 NA6 BLACK			
+----------+ | 64-481 | +----------+		INSULATOR NO.1,CHANGE			
NA01-64-481A AN(NA01-64-481B)	1	(MT)			-3C03
NA01-64-481B	1	(MT)			3C03-
+----------+ | 64-481A | +----------+		STOPPER,CONSOLE LID			
NA01-64-452	1				
00 INT-		NA3 NA5 NA4 NA6 BLACK			
+----------+ | 64-493A | +----------+		PACK,SILENT			
H001-64-493	1	(MT)			
+----------+ | 64-494 | +----------+		PAD,CHANGE BOOT			
FB01-64-495	1	(MT)			
+----------+ | 66-350 | +----------+		SWITCH,POWER WINDOW			
NA01-66-350A	1	PKG-B, PKG-C, RICO-OPT-PKG, (W/POWER WIND.) (MT)			
00 INT-		NA3 NA5 NA4 NA6 BLACK			
NA03-66-350	1	PKG-b, PKG-C, RICO-OPT-PKG, (W/POWER WIND.) (AT)			
00 INT-		NA3 NA5 NA4 NA6 BLACK			

3C03 NA3**4H-507848

CAT. AUNA04-03

1995 04

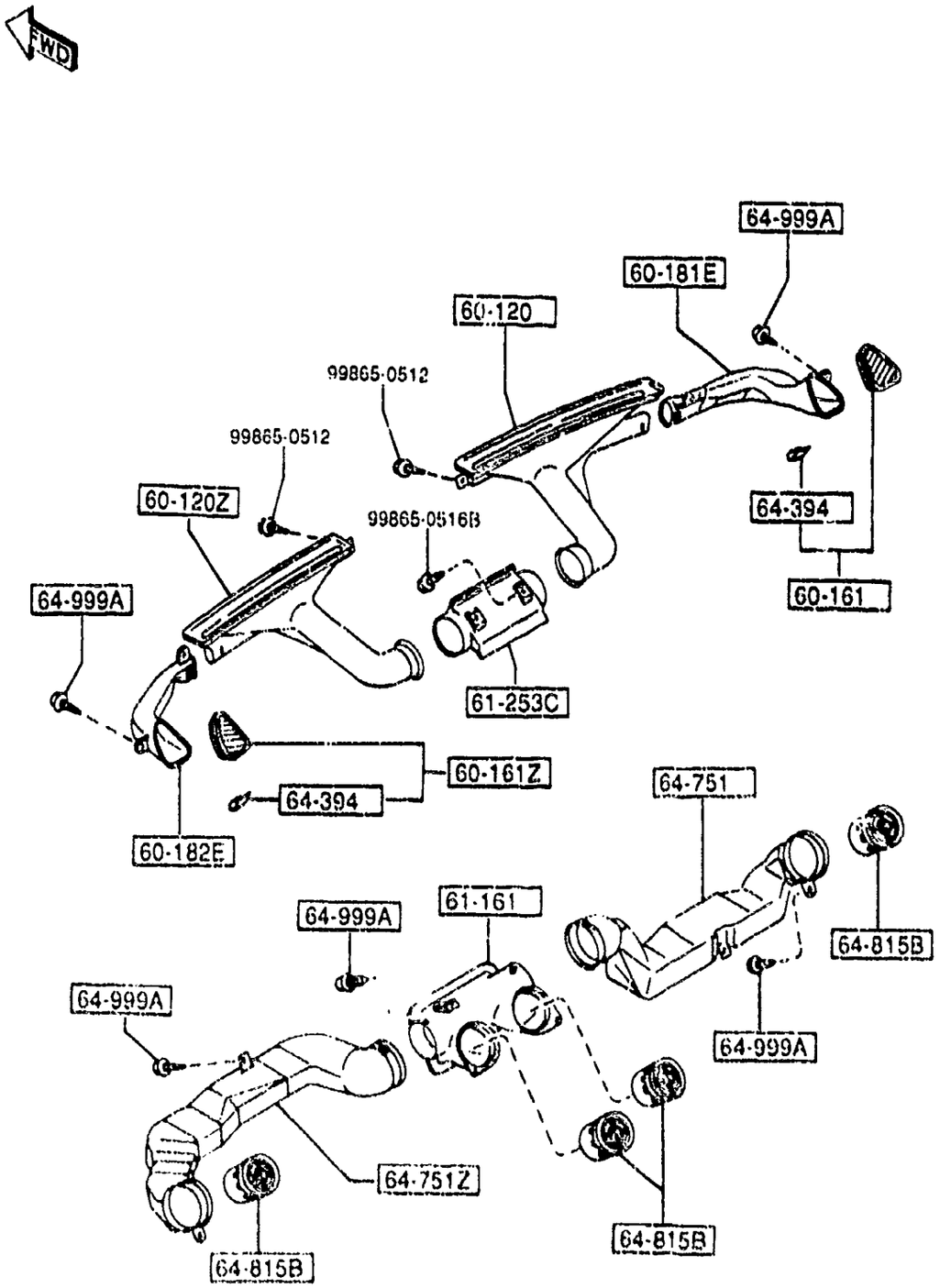

PART NO.	QTY	MODEL/RESTRICTION	MODEL/RESTRICTION	MODEL/RESTRICTION	FROM-TO
+----------+					
| 60-120 |		NOZZLE(R),DEFROSTER			
+----------+					
NA75-60-121A	1				-4601
A (NA75-60-121B)					
*NA75-60-121B	1				4601-
+----------+					
| 60-120Z |		NOZZLE(L),DEFROSTER			
+----------+					
NA01-60-141	1				
+----------+					
| 60-161 |		GRILLE(R),DEMISTER			
+----------+					
NA75-60-160A	1	BASE, PKG-A, PKG-B, PKG-R, (INSTRUMENT PANEL-BLACK)			-3A01
00	INT-	NA3 BLACK			
NA79-60-160A	1	PKG-C, (INSTRUMENT PANEL-TAN)			-3A01
00	INT-	NA4 NA5 BLACK			
NA75-60-160A	1				3A01-
00	INT-	NA3 NA5 NA4 BLACK			
+----------+					
| 60-161Z |		GRILLE(L),DEMISTER			
+----------+					
NA75-60-170A	1	BASE, PKG-A, PKG-B, PKG-R, (INSTRUMENT PANEL-BLACK)			-3A01
00	INT-	NA3 BLACK			
NA79-60-170A	1	PKG-C, (INSTRUMENT PANEL-TAN)			-3A01
00	INT-	NA4 NA5 BLACK			
NA75-60-170A	1				3A01-
00	INT-	NA3 NA5 NA4 BLACK			
+----------+					
| 60-181E |		DUCT(R),SIDE DEMI.			
+----------+					
NA75-60-183	1				
+----------+					
| 60-182E |		DUCT(L),SIDE DEMI.			
+----------+					
NA75-60-193	1				
+----------+					
| 61-161 |		DUCT,CENTER			
+----------+					
NA75-61-161A	1				

3A01 NA3***-505179
4601 NA3***-519089

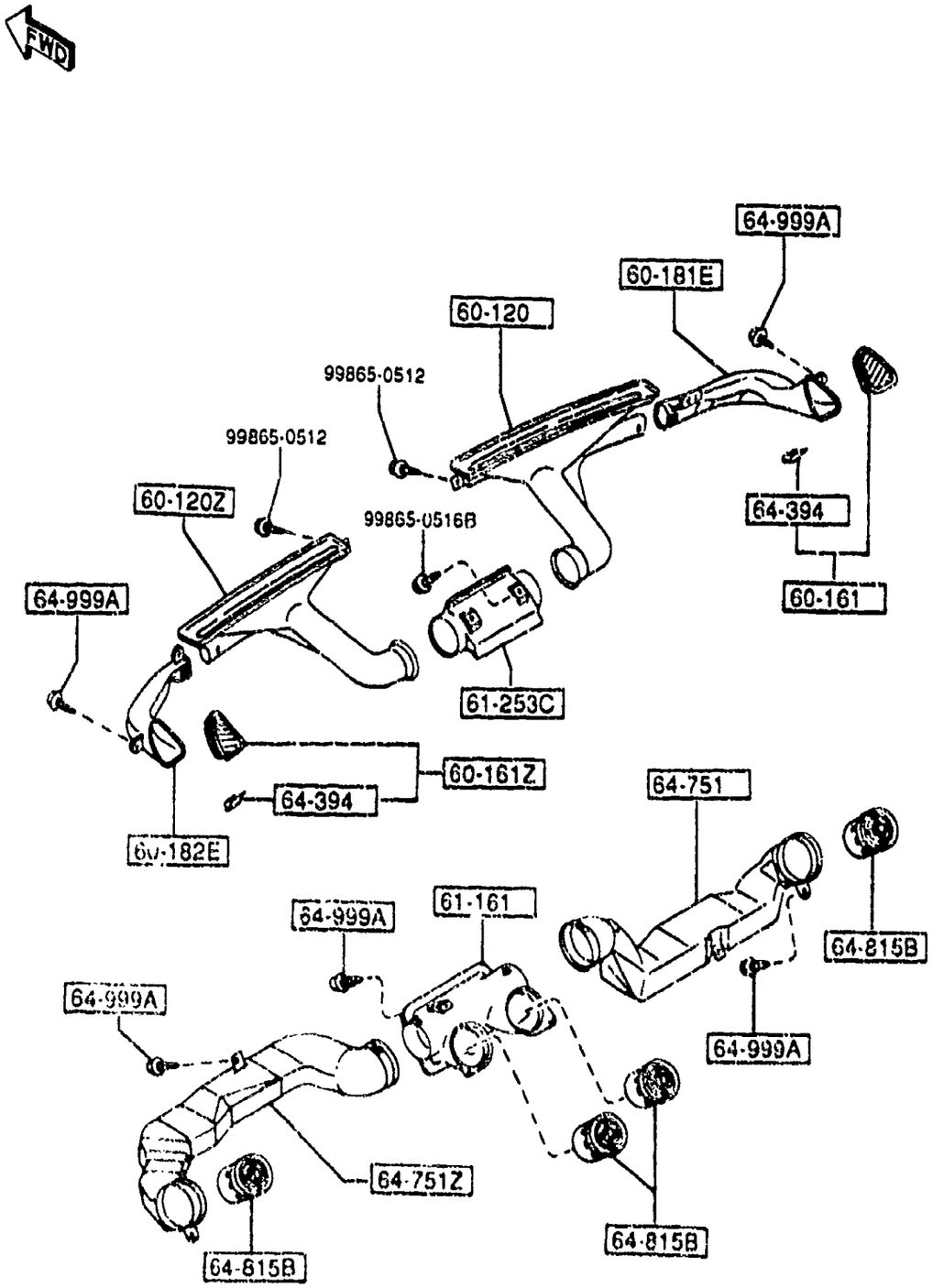

5580 -2 * VENTILATOR

PART NO.	QTY	MODEL/RESTRICTION	MODEL/RESTRICTION	MODEL/RESTRICTION	FROM-TO
61-253C NA01-61-253	1	HOSE(C),DEFROSTER			
64-394 GA2A-64-394	2	SPRING			
64-751 NA75-64-741	1	DUCT(R)			
64-751Z NA75-64-841	1	DUCT(L)			
64-815B N001-64-81X	4	LOUVER,VENTILATOR			
00	INT-	NA3 NA5 NA4 NA6 BLACK			
64-999A W201-64-999	10	SCREW,TAPPING			

SPECIFICATIONS \ TYPE	STB	STA
GRADE	PKG-C, PKG-C-OPT.	BASE, PKG-A, PKG-B, PKG-R, PKG-B-OPT.
SEAT TRIM	LEATHER	CLOTH
		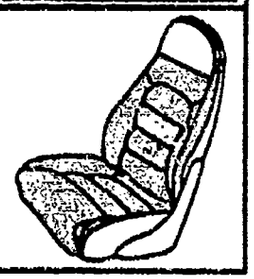

AUNA04

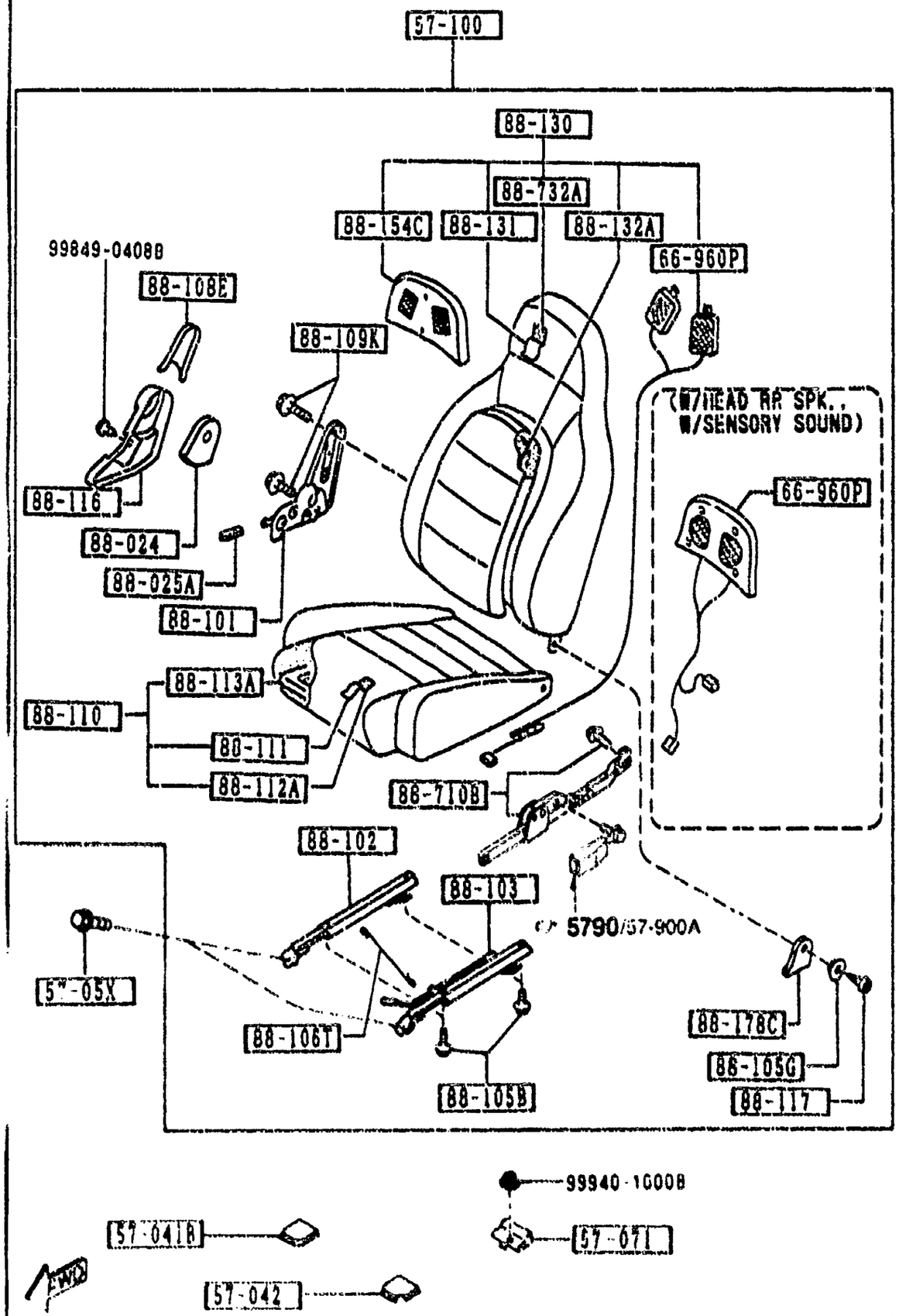

AUNA04

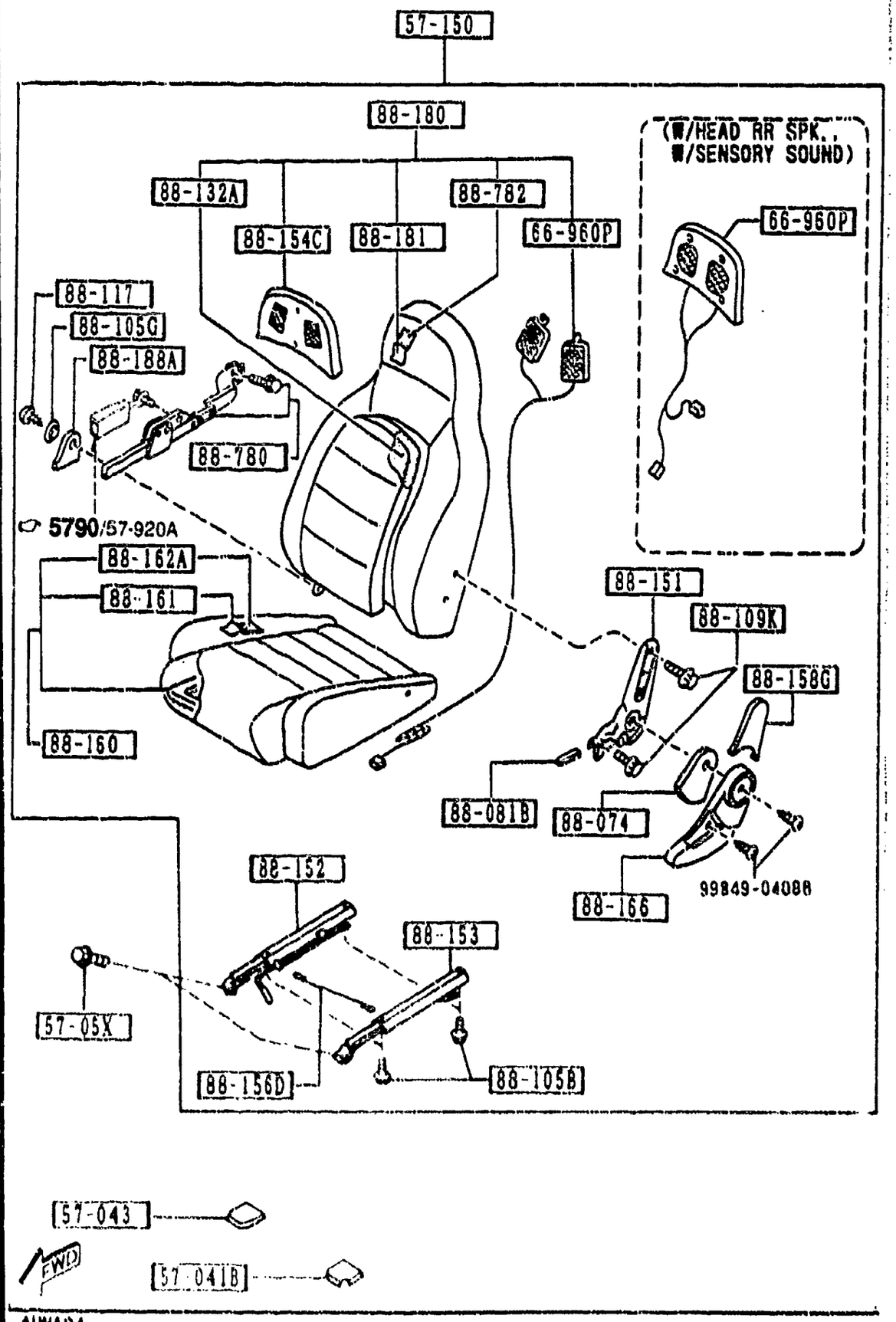
57-150
88-180
(W/HEAD RR SPK., W/SENSORY SOUND)
88-132A
88-782
88-154C
88-181
66-960P
66-960P
88-117
88-105G
88-188A
88-780
5790/57-920A
88-162A
88-161
88-151
88-109K
88-158G
88-160
88-081B
88-074
88-166
99849-04088
88-152
88-153
57-05X
88-156D
88-105B
57-043
FWD
57-041B

AUHA04

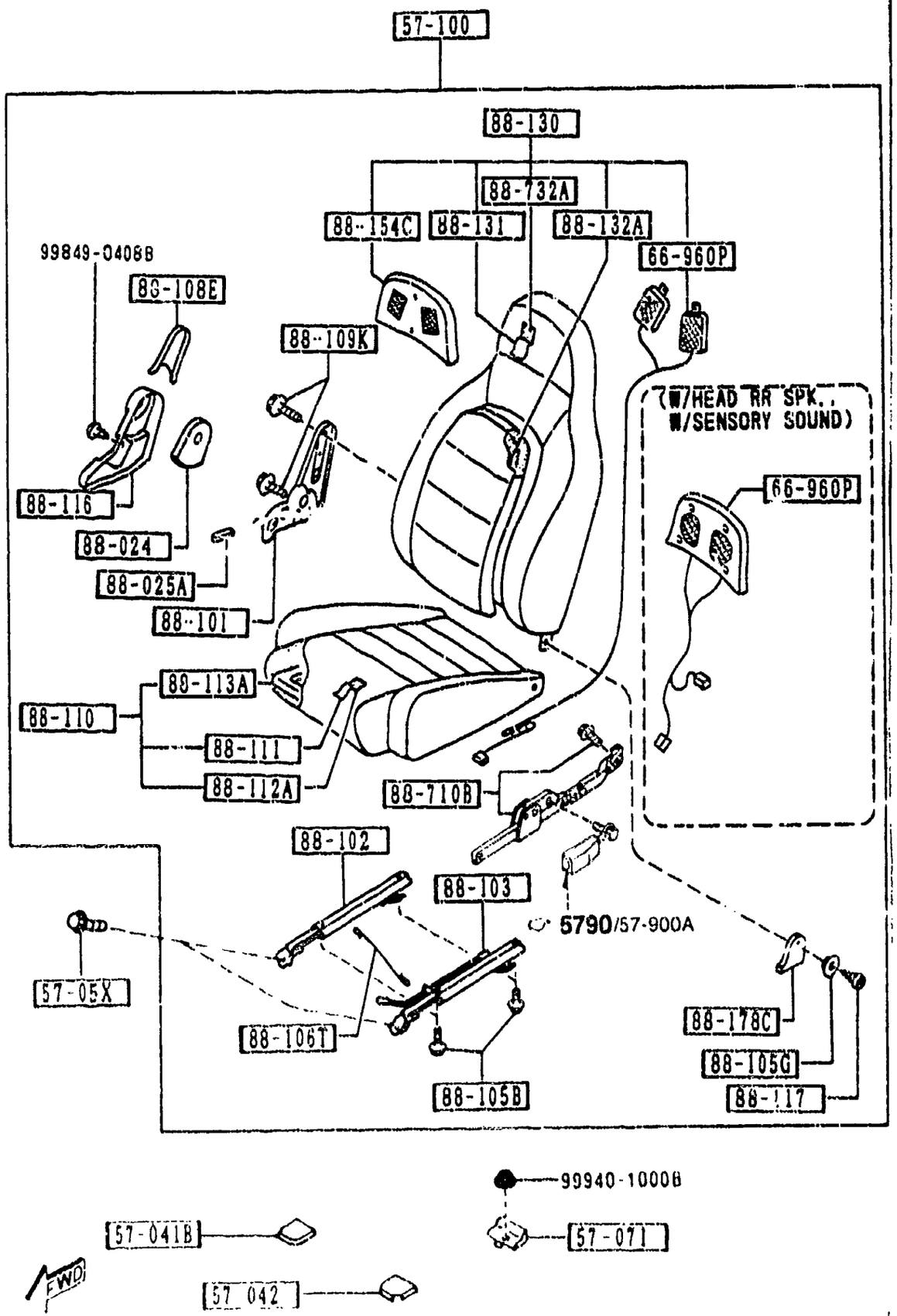

PART NO.	QTY	MODEL/RESTRICTION	MODEL/RESTRICTION	MODEL/RESTRICTION	FROM-TO
57-041B		COVER NO.1,ADJ-FRT			
J001-57-041	2	PKG-C, (STB TYPE)			
40	INT-	NA5 NA4 NA3 DARK GRAY			
57-042		COVER NO.2,ADJ-FRT			
N005-57-042	1	PKG-C, (STB TYPE)			
40	INT-	NA5 NA4 NA3 DARK GRAY			
57-043		COVER NO.3,ADJ-FRT			
N005-57-043	1	PKG-C, (STB TYPE)			
40	INT-	NA5 NA4 NA3 DARK GRAY			
57-05X		BOLT,LINK			
B455-57-05XA	8				
57-071		BRACKET,SEAT LOCK-RR			
NA75-57-071	1				
57-100		SEAT(R),FRONT			
NA75-57-100	1	BASE, PKG-R, (STA TYPE,W/O HEAD SPEAKER)			-3B02
00	INT-	NA3 BLACK			
NA79-57-100	1	PKG-A, PKG-B, (STA TYPE,W/HEAD SPEAKER, W/O SENSORY SOUND)			-3B02
00	INT-	NA3 BLACK			
NA80-57-100	1	PKG-B-OPT, (STA TYPE,W/HEAD SPEAKER, W/SENSORY SOUND)			-3B02
00	INT-	NA3 BLACK			
NA81-57-100B	1	PKG-C, (STB TYPE,W/HEAD SPEAKER, W/O SENSORY SOUND)			-4201
88	INT-	NA4 NA5 TAN			
NA82-57-100B	1	PKG-C-OPT, (STB TYPE,W/HEAD SPE			-4201

3B02 NA3***-505896
4201 NA3***-511601

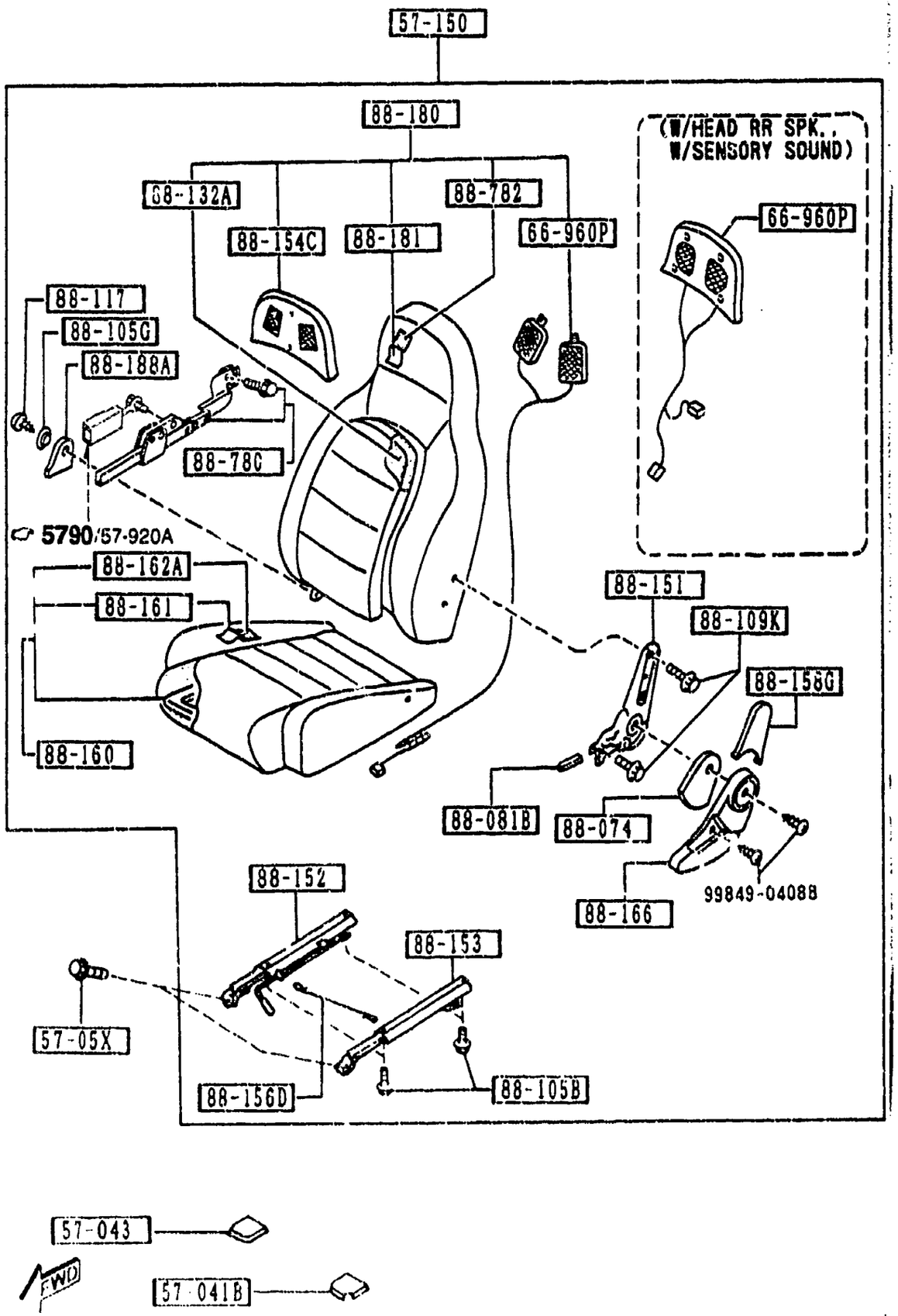

AUNA04

PART NO.	QTY	MODEL/RESTRICTION	MODEL/RESTRICTION	MODEL/RESTRICTION	FROM-TO
CONT'D					
		AKER, W/SENSORY SOUN D)			
88	INT-	NA4 NA5 TAN			
NA75-57-100A	1	BASE, PKG-R, (STA TYPE,W/O HEAD S PEAKER)			3B02-4201
00	INT-	NA3 BLACK			
NA79-57-100A	1	PKG-A, PKG-B, (STA TYPE,W/HEAD SPE AKER, W/O SENSORY SO UND)			3B02-4201
00	INT-	NA3 BLACK			
NA80-57-100A	1	PKG-B-OPT, (STA TYPE,W/HEAD SPE AKER, W/SENSORY SOUN D)			3B02-4201
00	INT-	NA3 BLACK			
NA75-57-100C	1	BASE, PKG-R, (STA TYPE,W/O HEAD S PEAKER)			4201-
00	INT-	NA3 BLACK			
NA79-57-100C	1	PKG-A, PKG-B, (STA TYPE,W/HEAD SPE AKER, W/O SENSORY SO UND)			4201-
00	INT-	NA3 BLACK			
NA80-57-100C	1	PKG-B-OPT, (STA TYPE,W/HEAD SPE AKER, W/SENSORY SOUN D)			4201-
00	INT-	NA3 BLACK			
NA81-57-100D	1	PKG-C, (STB TYPE,W/HEAD SPE AKER, W/O SENSORY SO UND)			4201-
88	INT-	NA4 NA5 TAN			
NA82-57-100D	1	PKG-C-OPT, (STB TYPE,W/HEAD SPE AKER, W/SENSORY SOUN D)			4201-
88	INT-	NA4 NA5 TAN			
+---------+ | 57-150 | +---------+		SEAT(L),FRONT			
NA75-57-150	1	BASE, PKG-R, (STA TYPE,W/O HEAD S PEAKER) (N.AMERICA)			-3B02
00	INT-	NA3 BLACK			

3B02 NA3***-505896
4201 NA3***-511601

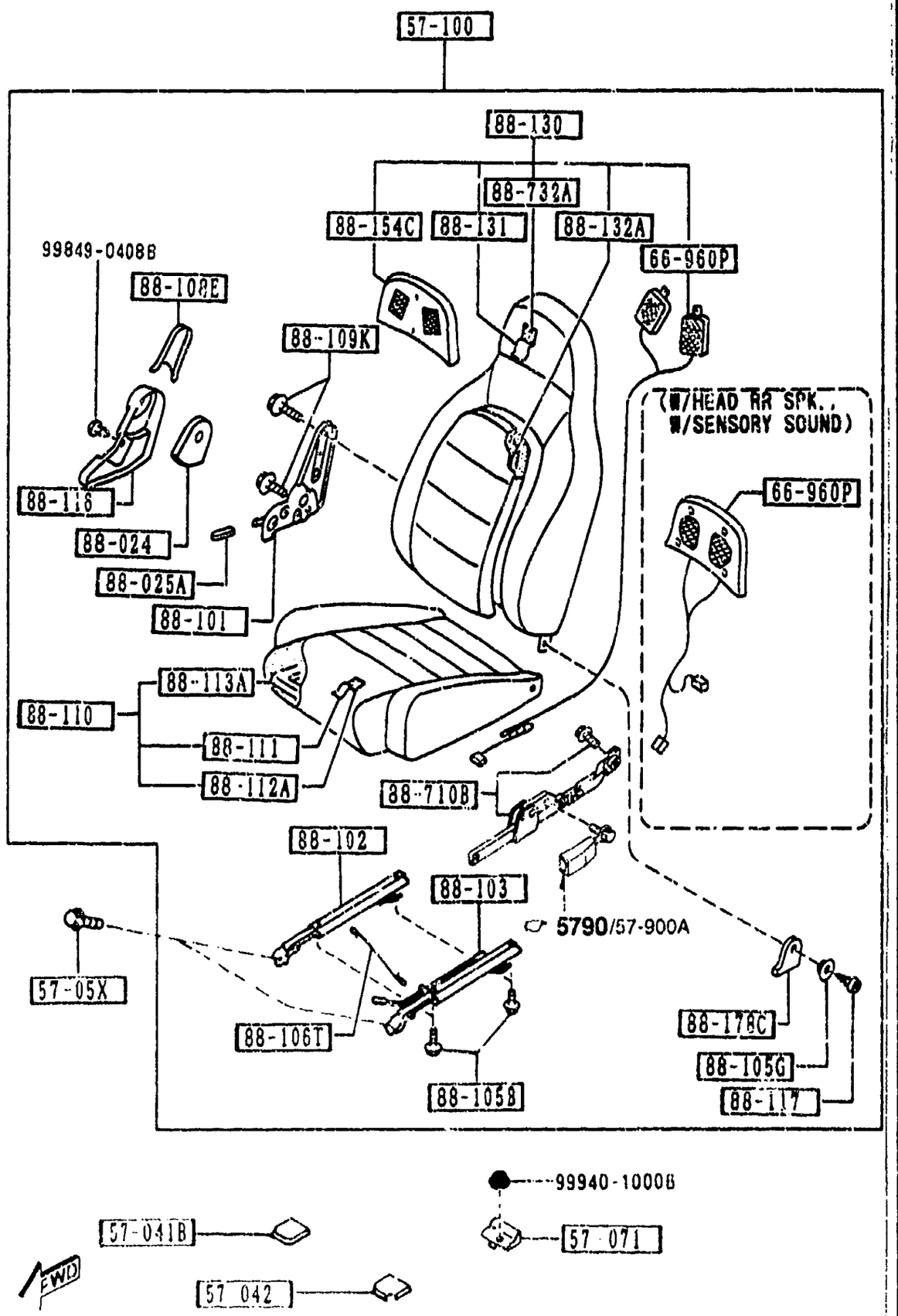

PART NO.	QTY	MODEL/RESTRICTION	MODEL/RESTRICTION	MODEL/RESTRICTION	FROM-TO
CONT'D					
NA79-57-150	1	PKG-A, PKG-B, (STA TYPE,W/HEAD SPEAKER, W/O SENSORY SOUND) (N.AMERICA)			-3B02
00	INT-	NA3 BLACK			
NA80-57-150	1	PKG-B-OPT, (STA TYPE,W/HEAD SPEAKER, W/SENSORY SOUND)			-3B02
00	INT-	NA3 BLACK			
NA81-57-150B	1	PKG-C, (STB TYPE,W/HEAD SPEAKER, W/O SENSORY SOUND)			-4201
88	INT-	NA4 NA5 TAN			
NA82-57-150B	1	PKG-C-OPT, (STB TYPE,W/HEAD SPEAKER, W/SENSORY SOUND)			-4201
88	INT-	NA4 NA5 TAN			
NA75-57-150A	1	BASE, PKG-R, (STA TYPE,W/O HEAD SPEAKER)			3B02-4201
00	INT-	NA3 BLACK			
NA79-57-150A	1	PKG-A, PKG-B, (STA TYPE,W/HEAD SPEAKER, W/O SENSORY SOUND)			3B02-4201
00	INT-	NA3 BLACK			
NA80-57-150A	1	PKG-B-OPT, (STA TYPE,W/HEAD SPEAKER, W/SENSORY SOUND)			3B02-4201
00	INT-	NA3 BLACK			
NA75-57-150C	1	BASE, PKG-R, (STA TYPE,W/O HEAD SPEAKER)			4201-
00	INT-	NA3 BLACK			
NA79-57-150C	1	PKG-A, PKG-B, (STA TYPE,W/HEAD SPEAKER, W/O SENSORY SOUND)			4201-
00	INT-	NA3 BLACK			
NA80-57-150C	1	PKG-B-OPT, (STA TYPE,W/HEAD SPEAKER, W/SENSORY SOUND)			4201-
00	INT-	NA3 BLACK			

3B02 NA3***-505896
4201 NA3***-511601

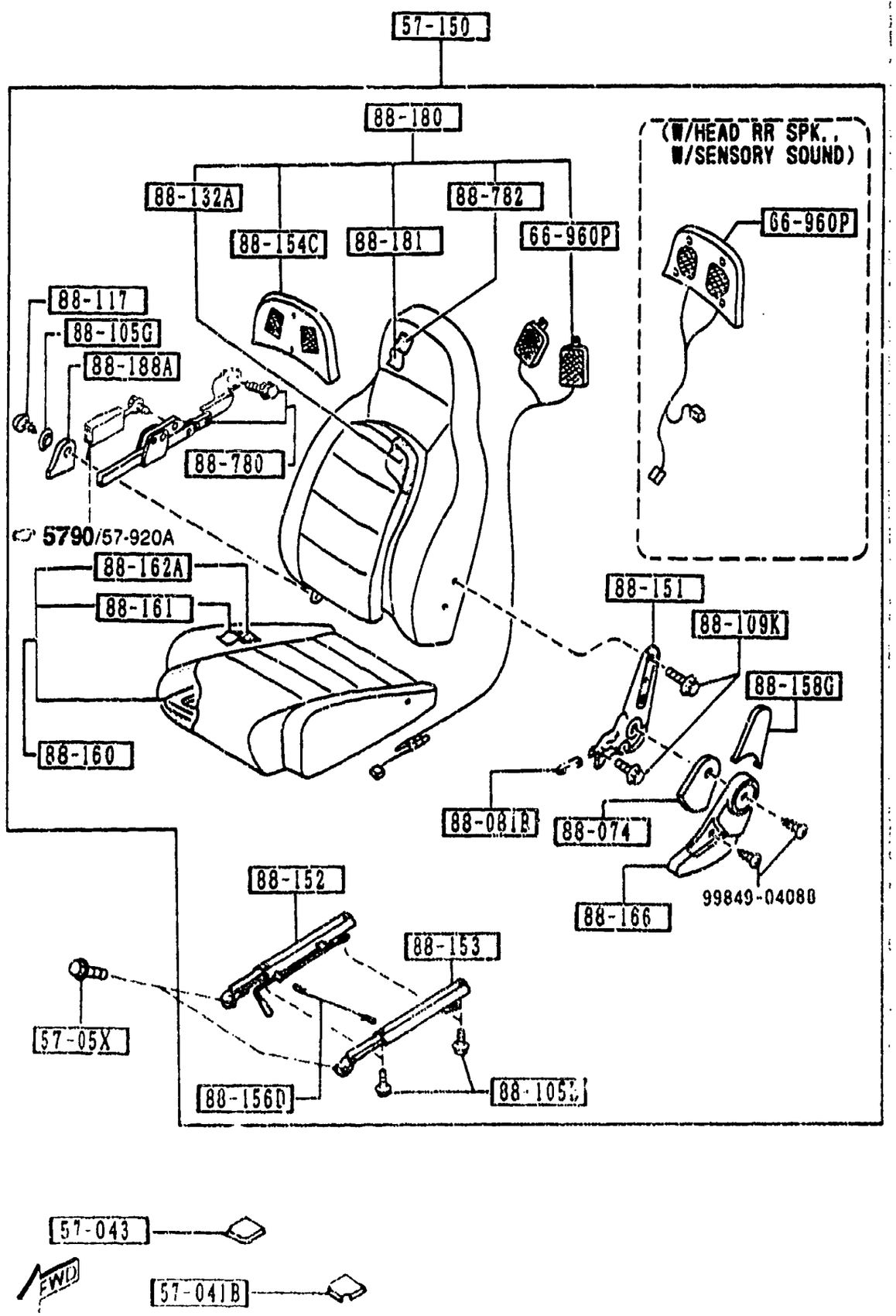

AUNA04

PART NO.	QTY	MODEL/RESTRICTION	MODEL/RESTRICTION	MODEL/RESTRICTION	FROM-TO
CONT'D					
NA81-57-150D	1	PKG-C, (STB TYPE,W/HEAD SPEAKER, W/O SENSORY SOUND)			4201-
88	INT-	NA4 NA5 TAN			
NA82-57-150D	1	PKG-C-OPT, (STB TYPE,W/HEAD SPEAKER, W/SENSORY SOUND)			4201-
88	INT-	NA4 NA5 TAN			
66-960P		SPEAKER,PILLOW-SEAT			
NA04-66-960B	2	PKG-A, PKG-B, PKG-C, (W/HEAD RR SPK.,W/O SENSORY SOUND)			
N020-66-960A	2	PKG-B-OPT, PKG-C-OPT, (W/HEAD RR SPK.,W/SENSORY SOUND)			
88-024		PROTR(R),SEAT BELT			
NA01-88-033	1				
88-025A		KNOB(R),KNUCKLE			
NA01-88-034	1				
00	INT-	NA3 BLACK			
88	INT-	NA5 NA4 TAN			
88-074		PROTR(L),SEAT BELT			
NA01-88-083	1				
88-081B		KNOB(L),KNUCKLE			
NA01-88-084	1				
00	INT-	NA3 BLACK			
88	INT-	NA5 NA4 TAN			
88-101		KNUCKLE(R),RECLINING			
NA01-88-101A	1				
88-102		ADJUSTER,NO.1			
NA01-88-102A	1				
88-103		ADJUSTER,NO.2			
NA75-88-103	1				

4201 NA3[illegible]-511601

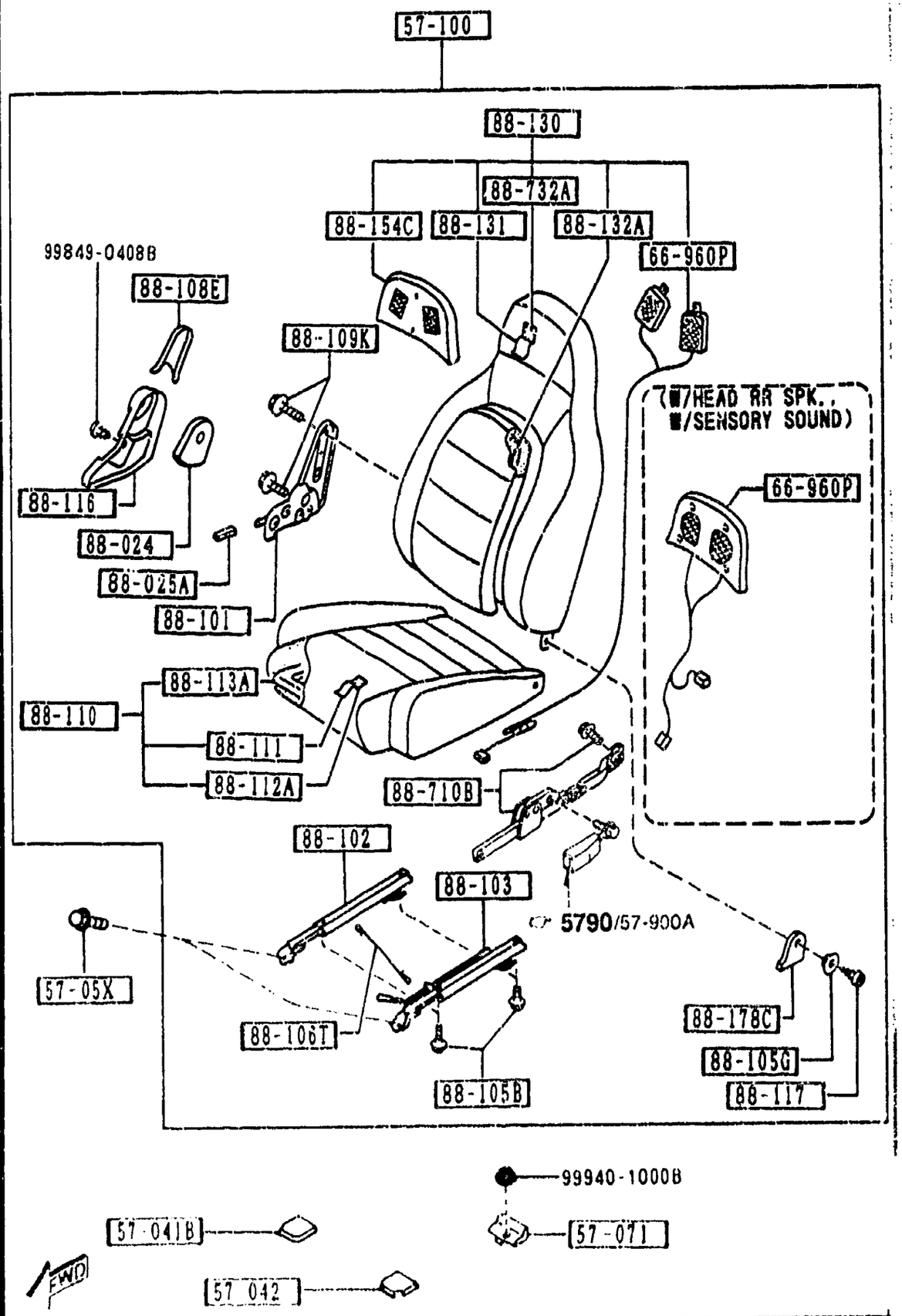

AUNA04

PART NO.	QTY	MODEL/RESTRICTION	MODEL/RESTRICTION	MODEL/RESTRICTION	FROM-TO
88-105B		BOLT,LINK			
H260-88-105	8				
88-105G		BUSH,HINGE			
H260-88-108	2				
02	INT-	NA3 NA5 NA4 NA6 BLACK			
88-106T		WIRE,CONNECT			
NA01-88-106	1				
88-108E		COVER(R),SEAT BACK			
NA01-88-036	1				
0G	INT-	NA3 BLACK			
88	INT-	NA5 NA4 TAN			
88-109K		SCREW,KNUCKLE			
H260-88-109	8				
88-110		CUSHION(R),FRT SEAT			
NA75-88-110	1	BASE, PKG-A, PKG-B, PKG-R, (STA TYPE)			
00	INT-	NA3 BLACK			
NA81-88-110	1	PKG-C, (STB TYPE)			
88	INT-	NA5 NA4 TAN			
88-111		TRIM(R),SEAT CUSHION			
NA75-88-111	1	BASE, PKG-A, PKG-B, PKG-R, (STA TYPE)			
00	INT-	NA3 BLACK			
NA81-88-111	1	PKG-C, (STB TYPE)			
88	INT-	NA5 NA4 TAN			
88-112A		PAD(R),CUSHION-FRT			
N001-88-112 AN(NA75-88-112)	1				-4201
N005-88-112 AN(NA81-88-112)	1				-4201

4201 NA3***-511601

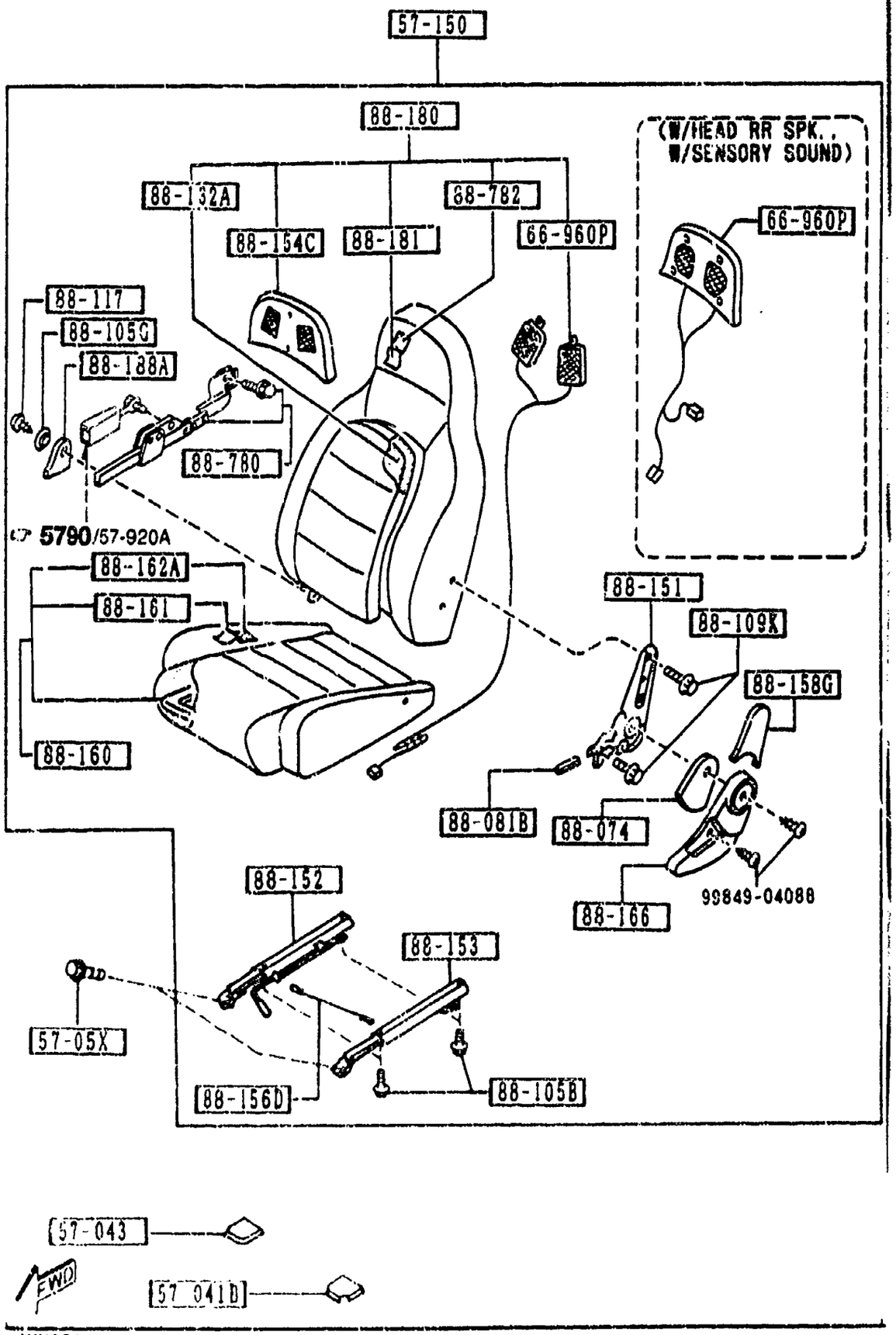

PART NO.	QTY	MODEL/RESTRICTION	MODEL/RESTRICTION	MODEL/RESTRICTION	FROM-TO
CONT'D					
NA75-88-112	1	BASE, PKG-A, PKG-B, PKG-R, (STA TYPE)			4201-
NA81-88-112	1	PKG-C, (STB TYPE)			4201-
+----------+					
| 88-113A |		FRAME(R),CUSHION-FRT			
+----------+					
NA75-88-113	1				
+----------+					
| 88-116 |		COVER(R),KNUCKLE			
+----------+					
NA01-88-031	1				
00	INT-	NA3 BLACK			
88	INT-	NA5 NA4 TAN			
+----------+					
| 88-117 |		SCREW,KNUCKLE			
+----------+					
H260-88-107	2				
+----------+					
| 88-130 |		BACK(R),FRONT SEAT			
+----------+					
NA75-88-130	1	BASE, PKG-R, (STA TYPE,W/O HEAD SPEAKER)			
00	INT-	NA3 BLACK			
NA79-88-130	1	PKG-A, PKG-B, (STA TYPE,W/HEAD SPEAKER, W/O SENSORY SOUND)			
00	INT-	NA3 BLACK			
NA80-88-130	1	PKG-B-OPT, (STA TYPE,W/HEAD SPEAKER, W/SENSORY SOUND)			
00	INT-	NA3 BLACK			
NA82-88-130	1	PKG-C-OPT, (STB TYPE,W/HEAD SPEAKER, W/SENSORY SOUND)			
88	INT-	NA5 NA4 TAN			
NA23-88-130B	1	PKG-C, (STB TYPE,W/HEAD SPEAKER, W/O SENSORY SOUND)			-4201
88	INT-	NA5 NA4 TAN			
NA81-88-130	1	PKG-C, (STB TYPE,W/HEAD SPEAKER, W/O SENSORY SOUND)			4201-

4201 NA3###-511601

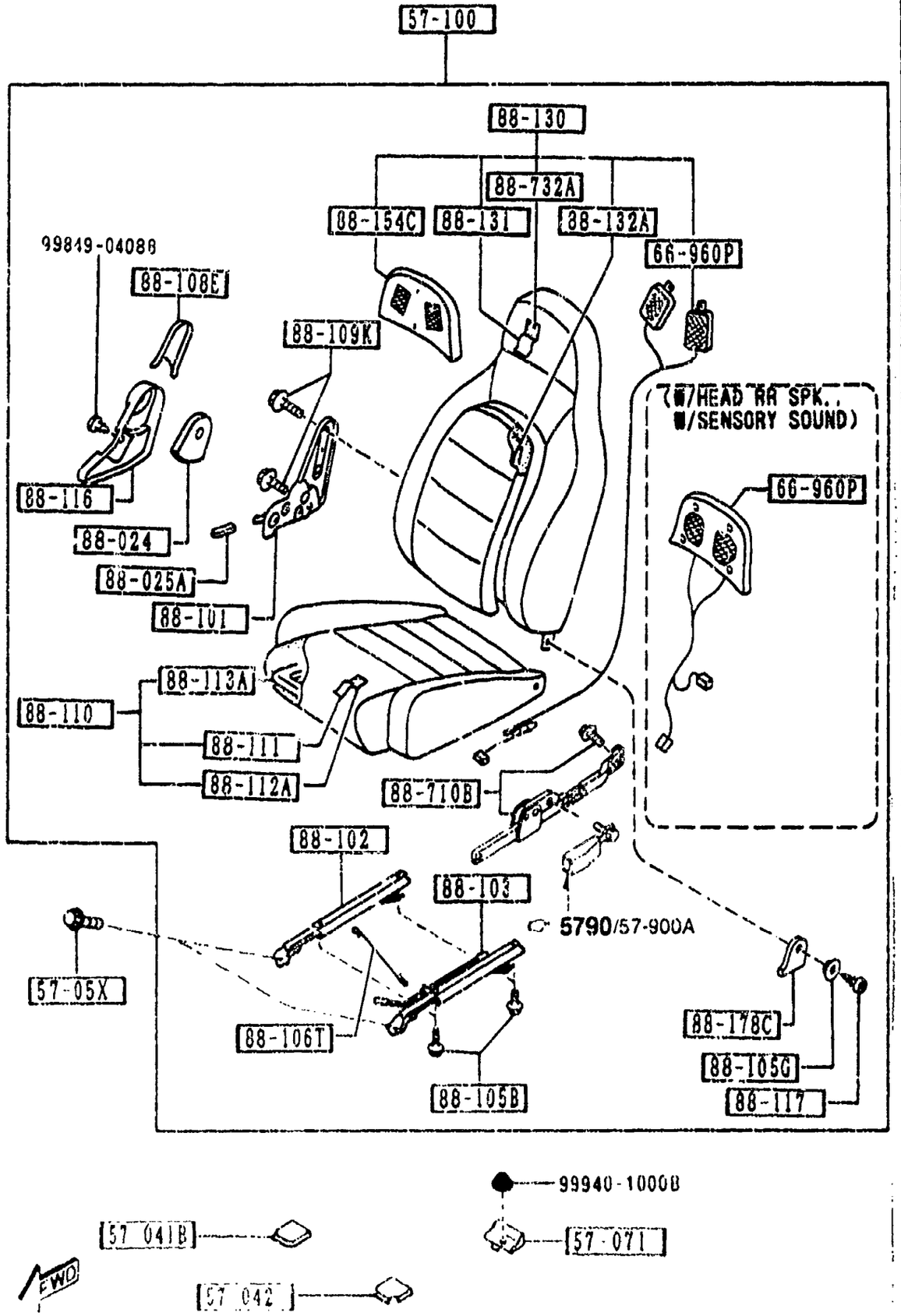

PART NO.	QTY	MODEL/RESTRICTION	MODEL/RESTRICTION	MODEL/RESTRICTION	FROM-TO
CONT'D					
88	INT-	NA4 NA5 TAN			
88-131		TRIM(R),SEAT BACK			
NA75-88-131	1	BASE, PKG-A, PKG-B, PKG-R, (STA TYPE,W/O SENSORY SOUND)			
00	INT-	NA3 BLACK			
NA80-88-131	1	PKG-B-OPT, (STA TYPE,W/SENSORY SOUND)			
00	INT-	NA3 BLACK			
NA82-88-131	1	PKG-C,OPT, (STB TYPE,W/SENSORY SOUND)			
88	INT-	NA5 NA4 TAN			
NA23-88-131	1	PKG-C, (STB TYPE,W/O SENSORY SOUND)			-4201
88	INT-	NA5 NA4 TAN			
NA81-88-131	1	PKG-C, (STB TYPE,W/O SENSORY SOUND)			4201-
88	INT-	NA4 NA5 TAN			
88-132A		PAD(R),BACK-FRT			
NA01-88-132A	2	(IN SPITE OF (R),THIS PART IS APPLICABLE TO BOTH RH&LH SIDE) (W/O SENSORY SOUND)			
88-151		KNUCKLE(L),RECLINING			
NA01-88-151A	1				
88-152		ADJUSTER NO.3			
NA01-88-152A	1				
88-153		ADJUSTER NO.4			
NA01-88-153A	1				
88-154C		COVER,HEAD REST			
NA01-88-137	2	(W/O SENSORY SOUND)			
88-156D		WIRE,CONNECT			

4201 NA3***-511601

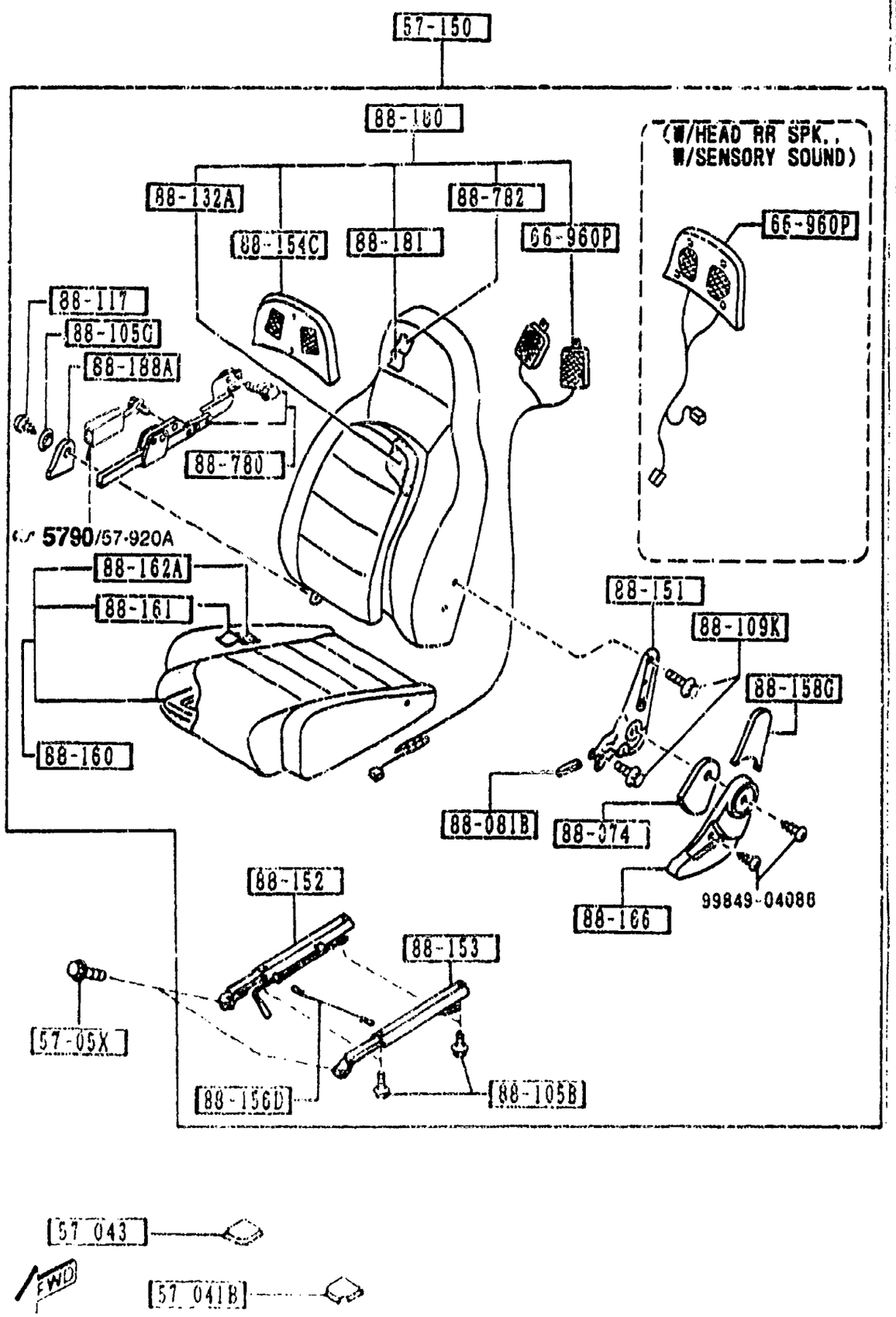

PART NO.	QTY	MODEL/RESTRICTION	MODEL/RESTRICTION	MODEL/RESTRICTION	FROM-TO
CONT'D					
NA01-88-156	1				
+----------+					
| 88-158G |		COVER(L),SEAT BACK			
+----------+					
NA01-88-086	1				
00	INT-	NA3 BLACK			
88	INT-	NA5 NA4 TAN			
+----------+					
| 88-160 |		CUSHION(L),FRT SEAT			
+----------+					
NA75-88-160	1	BASE, PKG-A, PKG-B, PKG-R, (STA TYPE)			
00	INT-	NA3 BLACK			
NA01-88-160	1	PKG-C, (STB TYPE)			
88	INT-	NA5 NA4 TAN			
+----------+					
| 88-161 |		TRIM(L),SEAT CUSHION			
+----------+					
NA75-88-161	1	BASE, PKG-A, PKG-B, PKG-R, (STA TYPE)			
00	INT-	NA3 BLACK			
NA01-88-161	1	PKG-C, (STB TYPE)			
88	INT-	NA5 NA4 TAN			
+----------+					
| 88-162A |		PAD(L),CUSHION-FRT			
+----------+					
NA01-88-162	1	BASE, PKG-A, PKG-B, PKG-R, (STA TYPE)			-4201
N005-88-162	1	PKG-C, (STB TYPE)			-4201
+----------+					
| 88-166 |		COVER(L),KNUCKLE			
+----------+					
NA01-88-081	1				
00	INT-	NA3 BLACK			
88	INT-	NA5 NA4 TAN			
+----------+					
| 88-178C |		COVER(R),HINGE			
+----------+					
NA75-88-035	1				-4201
00	INT-	NA3 BLACK			
88	INT-	NA5 NA4 TAN			
NA01-88-035	1				4201-

4201 NA5***-511601

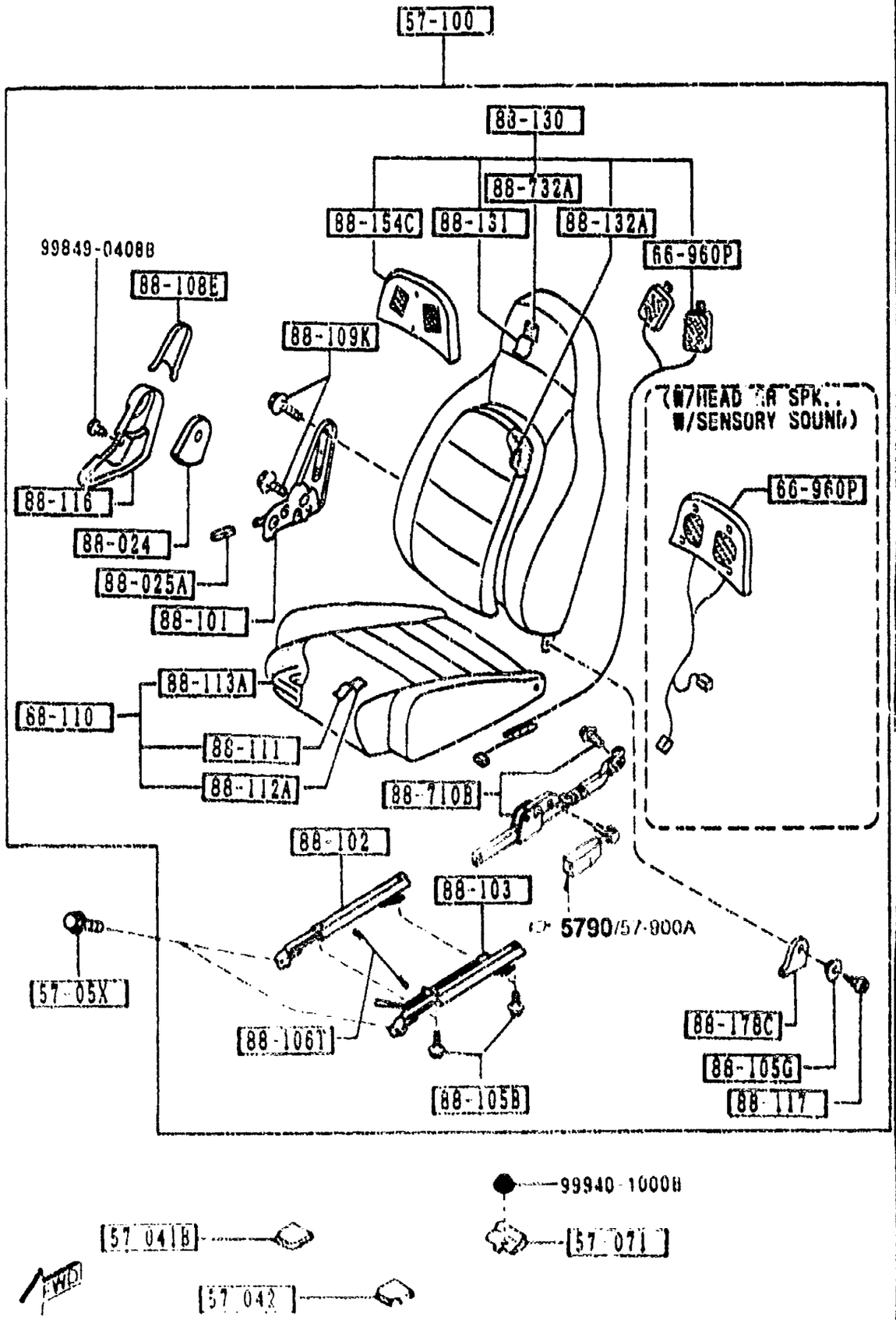

PART NO.	QTY	MODEL/RESTRICTION	MODEL/RESTRICTION	MODEL/RESTRICTION	FROM-TO
CONT'D					
00	INT-	NA3 BLACK			
88	INT-	NA4 NA5 TAN			
+---------+ | 88-180 | +---------+		BACK(L),FRONT SEAT			
NA75-88-180	1	BASE, PKG-R, (STA TYPE,W/O HEAD SPEAKER)			
00	INT-	NA3 BLACK			
NA79-88-180	1	PKG-A, PKG-B, (STA TYPE,W/HEAD SPEAKER, W/O SENSORY SOUND)			
00	INT-	NA3 BLACK			
NA80-88-180	1	PKG-B-OPT, (STA TYPE,W/HEAD SPEAKER, W/SENSORY SOUND)			
00	INT-	NA3 BLACK			
NA82-88-180	1	PKG-C-OPT, (STB TYPE,W/HEAD SPEAKER, W/SENSORY SOUND)			
88	INT-	NA5 NA4 TAN			
NA23-88-180B	1	PKG-C, (STB TYPE,W/HEAD SPEAKER, W/O SENSORY SOUND)			-4201
88	INT-	NA5 NA4 TAN			
NA81-88-180	1	PKG-C, (STB TYPE,W/HEAD SPEAKER, W/O SENSORY SOUND)			4201-
88	INT-	NA4 NA5 TAN			
+---------+ | 88-181 | +---------+		TRIM(L),SEAT BACK			
NA75-88-181	1	BASE, PKG-A, PKG-B, PKG-R, (STA TYPE,W/O SENSORY SOUND)			
00	INT-	NA3 BLACK			
NA80-88-181	1	PKG-B-OPT, (STA TYPE,W/SENSORY SOUND)			
00	INT-	NA3 BLACK			
NA82-88-181	1	PKG-C,OPT, (STB TYPE,W/SENSORY SOUND)			

4201 NA3###-511601

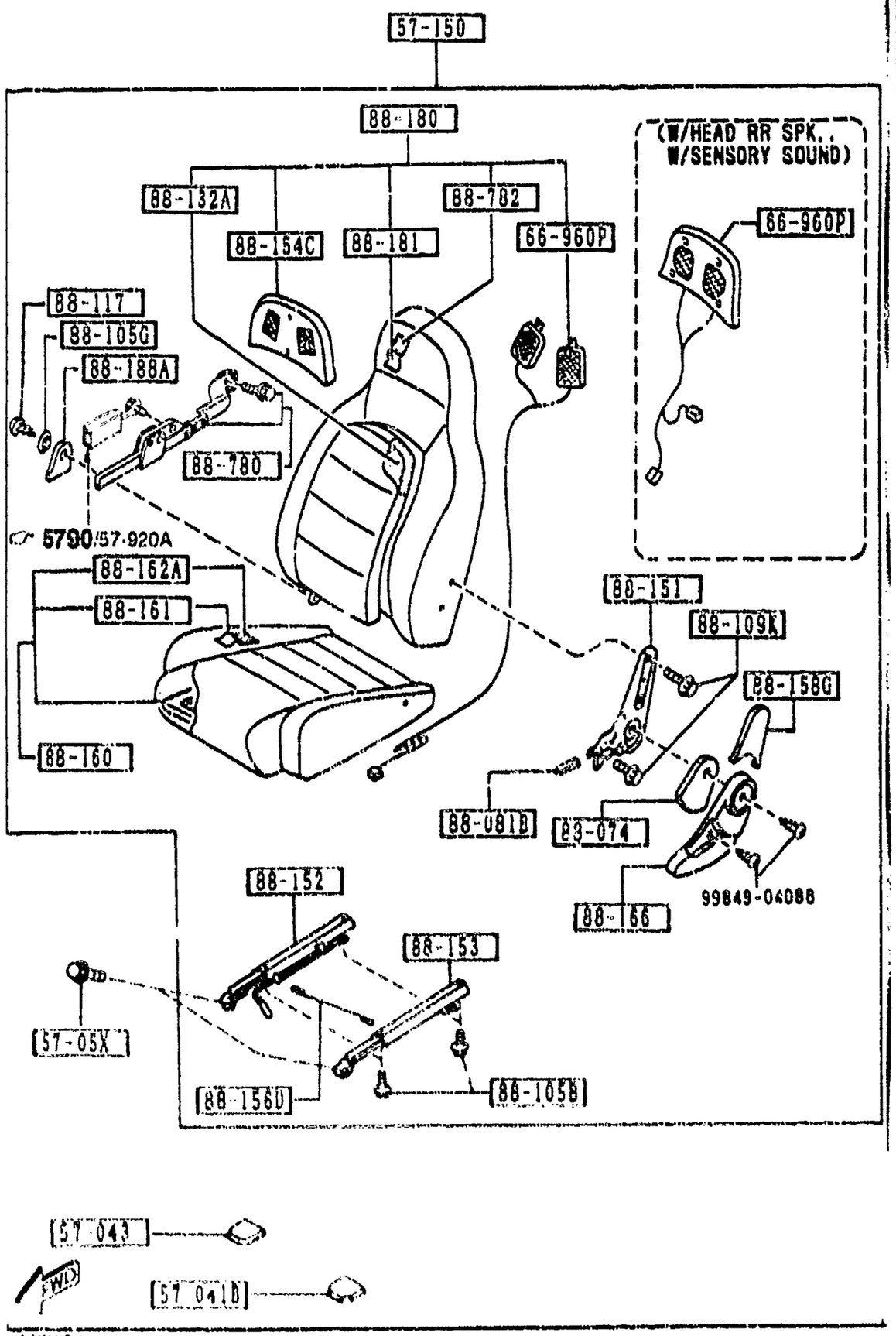

5700 -10* SEATS

PART NO.	QTY	MODEL/RESTRICTION	MODEL/RESTRICTION	MODEL/RESTRICTION	FROM-TO
CONT'D					
88	INT-	NA5 NA4 TAN			
NA23-88-181	1	PKG-C, (STB TYPE,W/O SENSOR Y SOUND)			-4201
88	INT-	NA5 NA4 TAN			
NA01-88-181	1	PKG-C, (STB TYPE,W/O SENSOR Y SOUND)			4201-
88	INT-	NA4 NA5 TAN			
88-188A		COVER(L),HINGE			
NA75-88-085	1				-4201
00	INT-	NA3 BLACK			
88	INT-	NA5 NA4 TAN			
NA01-88-085	1				4201-
00	INT-	NA3 BLACK			
88	INT-	NA4 NA5 TAN			
88-710B		ANCHOR UNIT(R),BELT			
*NA75-88-710	1				
88-732A		PAD'B'(R),BACK-FRT			
NA01-88-732A	1	(W/O SENSORY SOUND)			
88-780		ANCHOR UNIT(L),BELT			
*NA75-88-760	1				
88-782		PAD'B'(L),BACK-FRT			
NA01-88-782A	1	(W/O SENSORY SOUND)			

4201 NA3***-511601

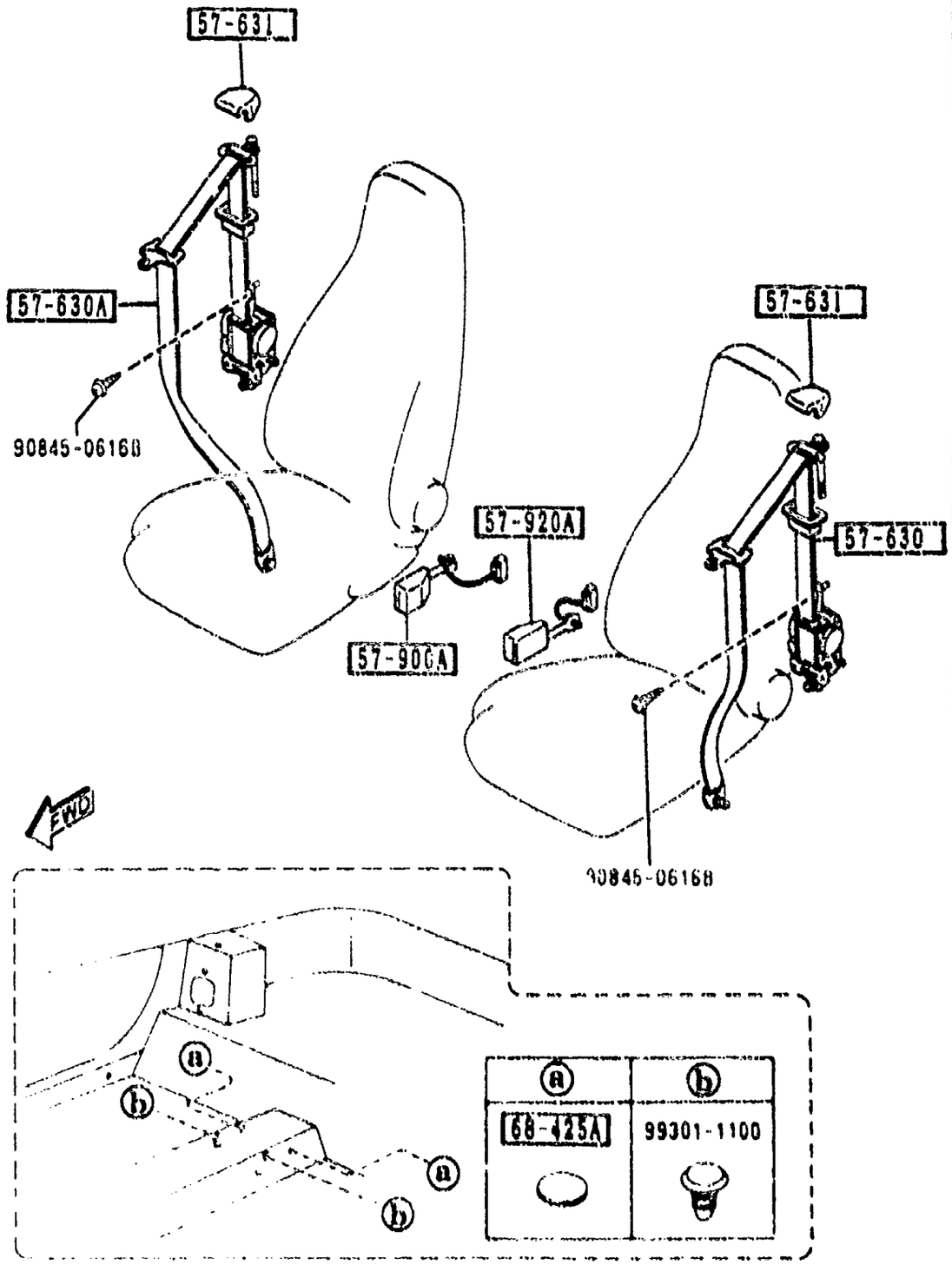

PART NO.	QTY	MODEL/RESTRICTION	MODEL/RESTRICTION	MODEL/RESTRICTION	FROM-TO
57-630		BELT'B',FRT SEAT			
NAR2-57-630D	1	NON USA,			
00	INT-	NA3 BLACK			
88	INT-	NA4 NA5 TAN/BLACK			
NA76-57-630	1	(W/AIR BAG-DRIV.&PAS S.SIDE)			-3901
00	INT-	NA3 BLACK			
88	INT-	NA4 NA5 TAN/BLACK			
NA76-57-630B	1	(W/AIR BAG-DRIV.&PAS S.SIDE)			3901-3B01
00	INT-	NA3 BLACK			
88	INT-	NA4 NA5 TAN/BLACK			
NA76-57-630C	1	(W/AIR BAG-DRIV.&PAS S.SIDE)			3B01-3B24
00	INT-	NA3 BLACK			
88	INT-	NA4 NA5 TAN/BLACK			
NA76-57-630D	1	(W/AIR BAG-DRIV.&PAS S.SIDE)			3B24-
00	INT-	NA3 BLACK			
88	INT-	NA4 NA5 TAN/BLACK			
57-630A		BELT'B'(R),FRT SEAT			
HA75-57-630D	1				-3B01
00	INT-	NA3 BLACK			
88	INT-	NA4 NA5 TAN			
NA75-57-630E	1				3B01-3B24
00	INT-	NA3 BLACK			
88	INT-	NA4 NA5 TAN			
NA75-57-630F	1				3B24-
00	INT-	NA3 BLACK			
88	INT-	NA4 NA5 TAN			
57-631		COVER,ANCHOR			
N026-57-631	2				
00	INT-	NA3 NA5 NA4 NA6 BLACK			
57-900A		BELT'A'(R),FRT SEAT			

3901 NA3***-502360
3B01 NA3***-505807
3B24 NA3***-507313

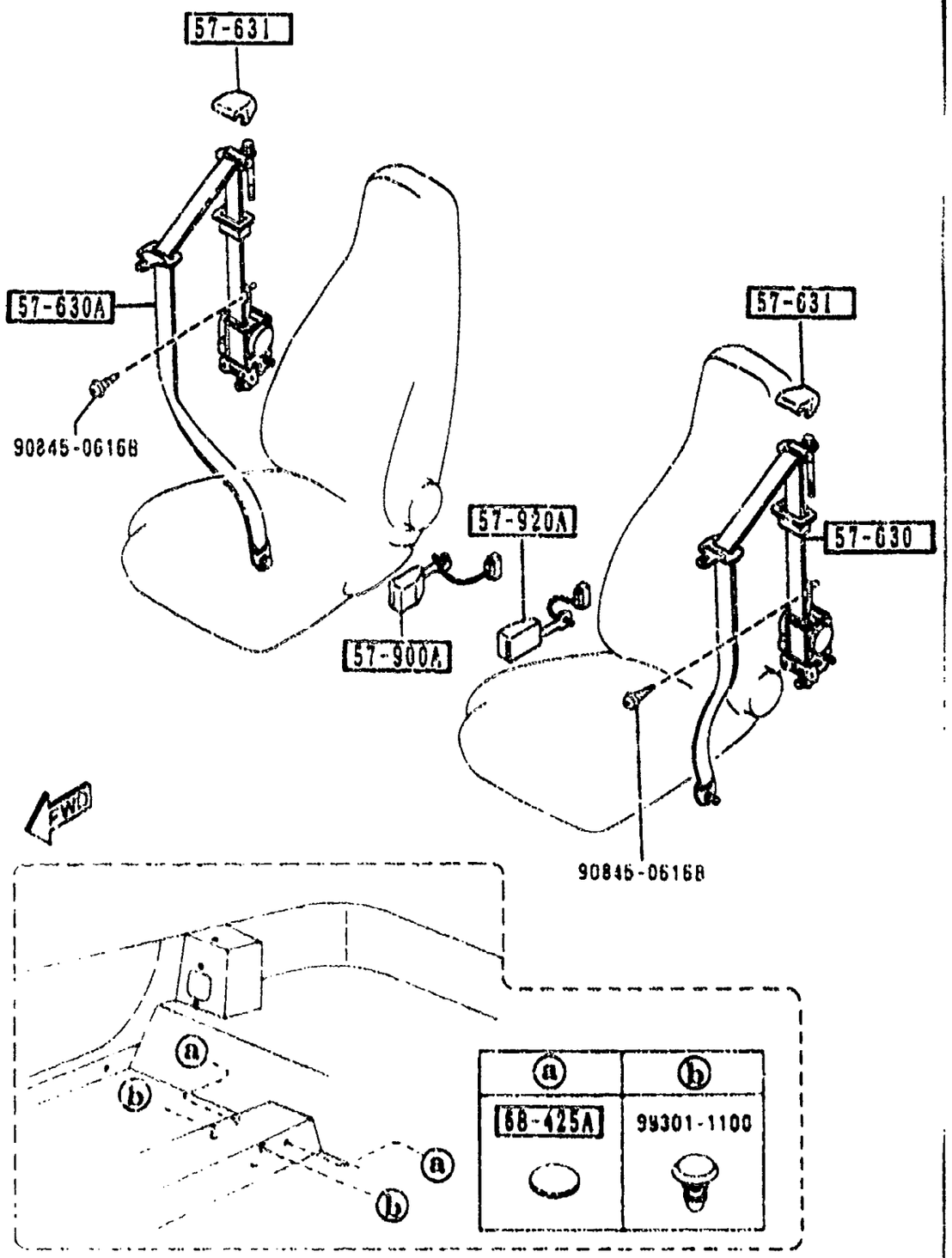

PART NO.	QTY	MODEL/RESTRICTION	MODEL/RESTRICTION	MODEL/RESTRICTION	FROM-TO
CONT'D					
NA75-57-620	1				
00	INT-	NA3 NA5 NA4 BLACK			
+---------+					
| 57-920A |		BELT'A'(L),FRT SEAT			
+---------+					
NA75-57-680A	1				
00	INT-	NA3 NA5 NA4 BLACK			
+---------+					
| 68-425A |		COVER,HOLE			
+---------+					
LA01-57-425A	2				

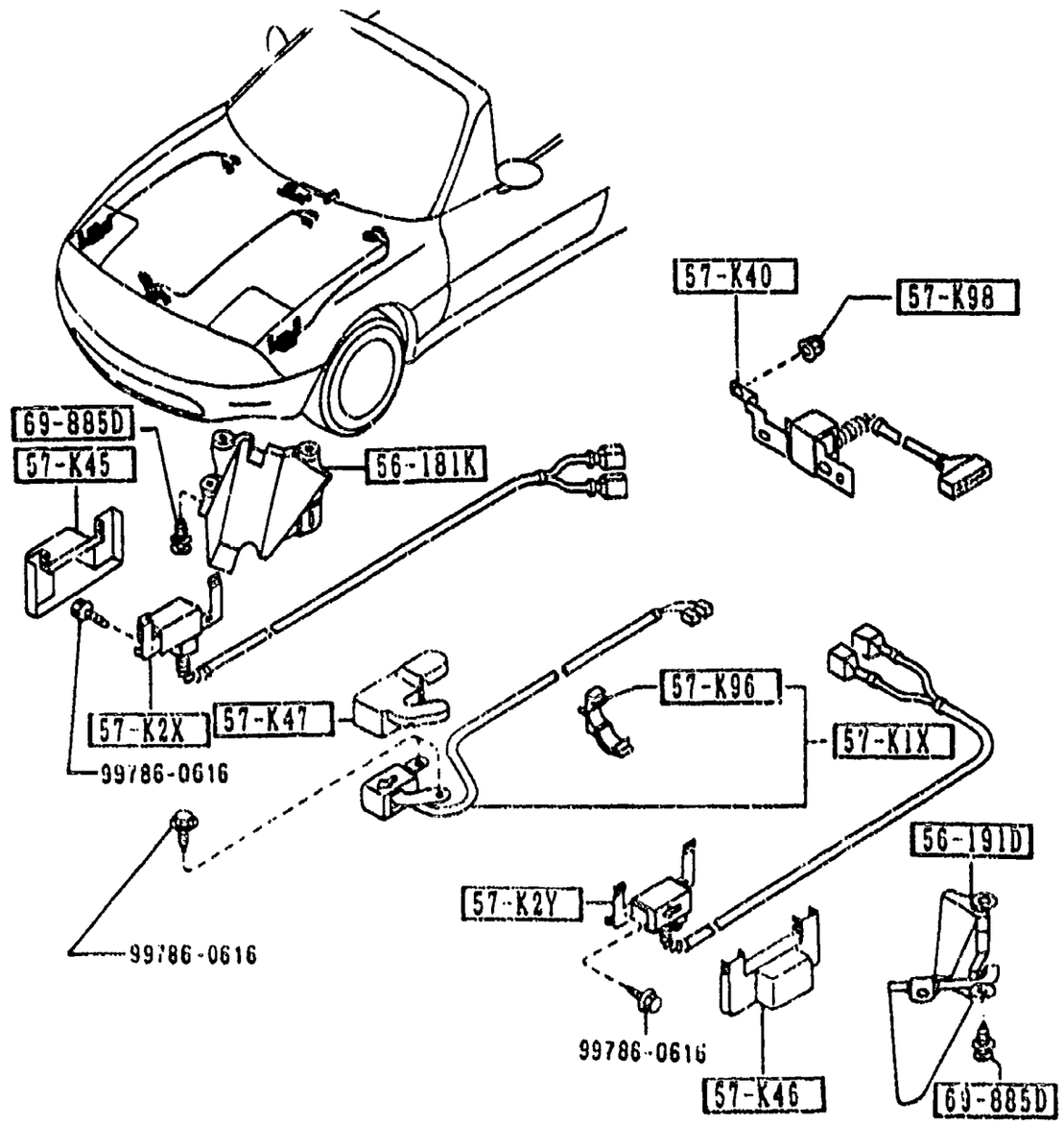
57-K40
57-K98
69-885D
57-K45
56-181K
57-K2X
57-K47
57-K96
57-K1X
99786-0616
99786-0616
56-191D
57-K2Y
99786-0616
57-K46
69-885D

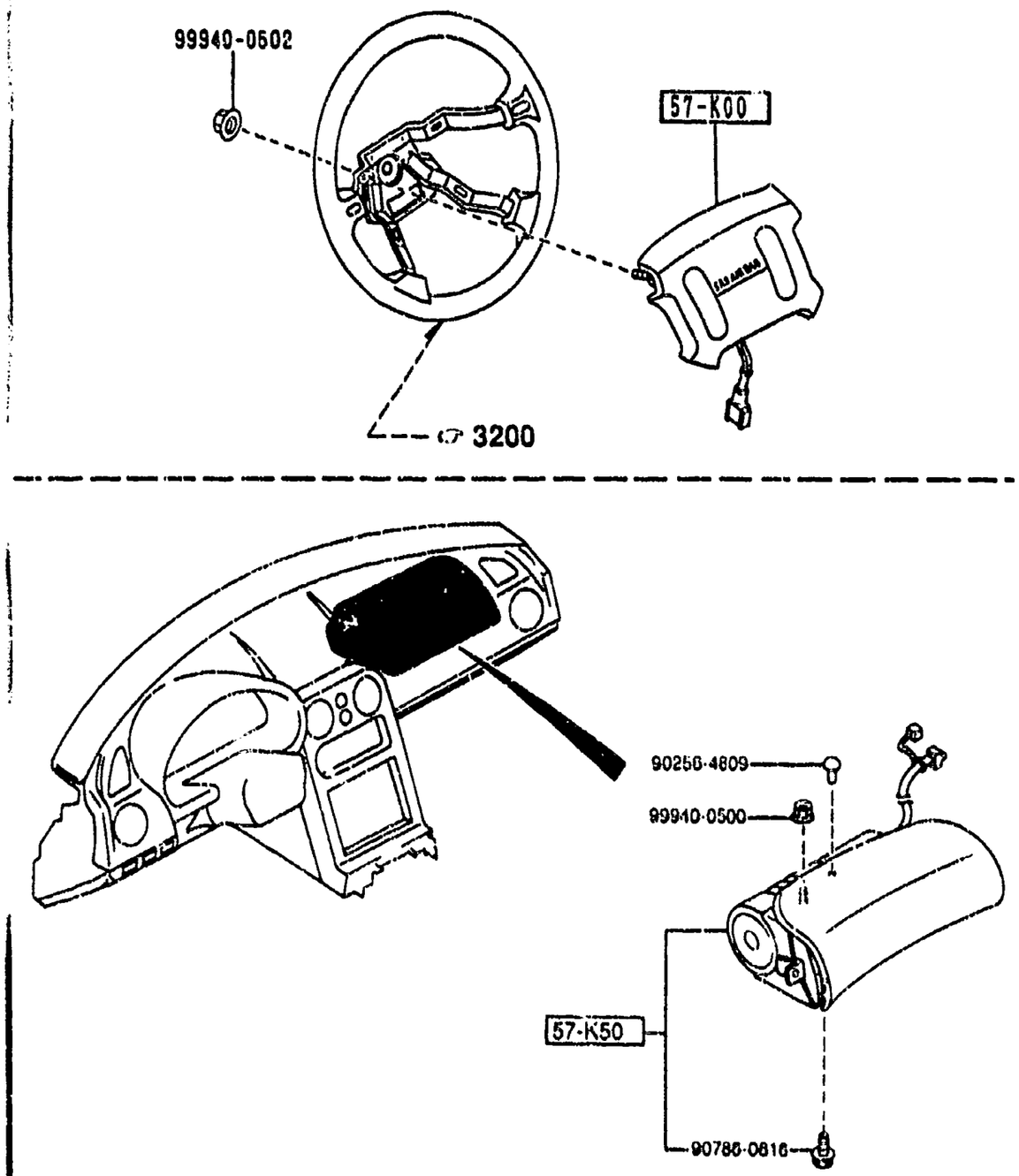
99940-0502
57-K00
3200
90250-4809
99940-0500
57-K50
90786-0616

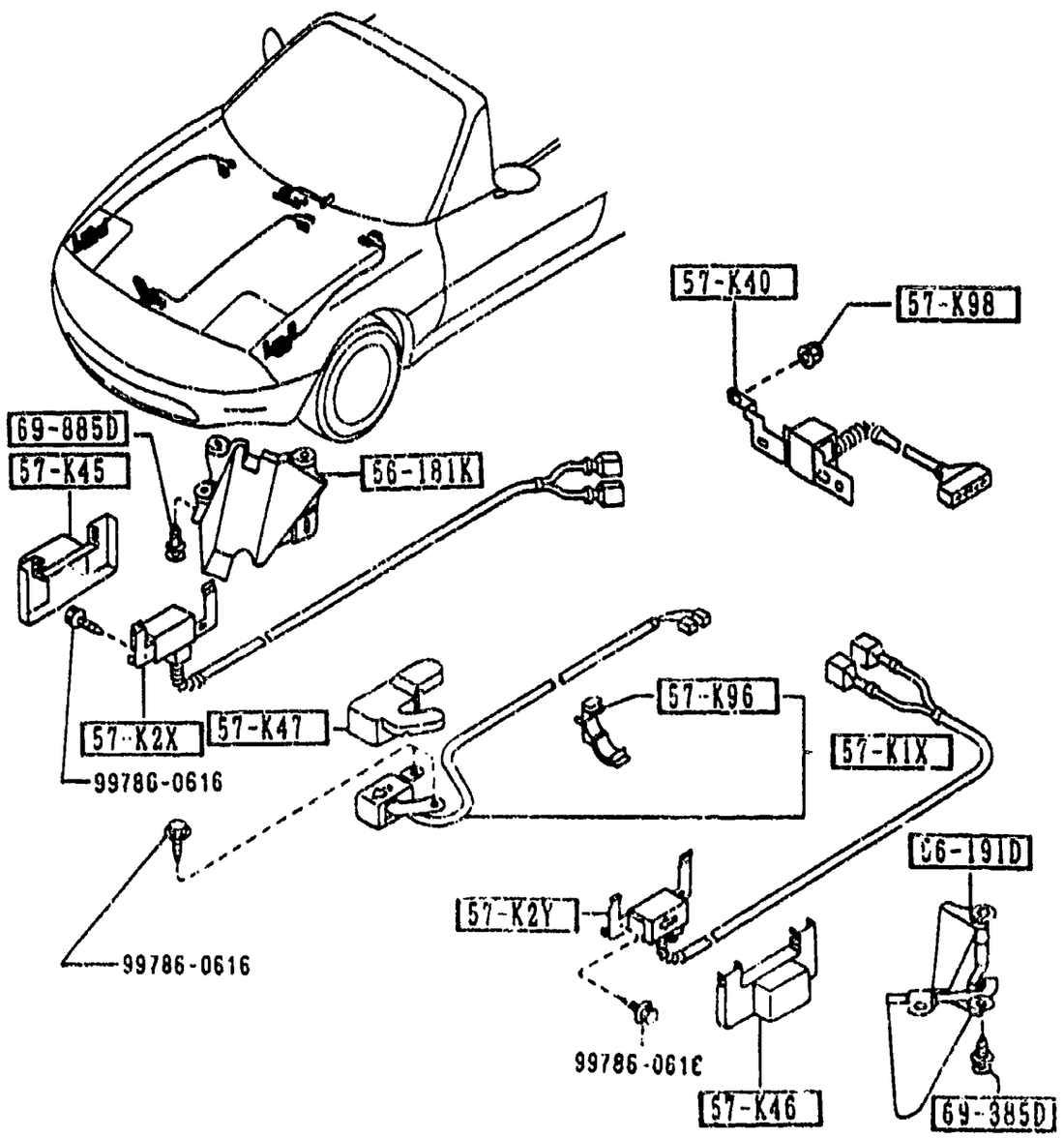

PART NO.	QTY	MODEL/RESTRICTION	MODEL/RESTRICTION	MODEL/RESTRICTION	FROM-TO
56-181K		COVER(R),SENSOR-AIR BAG			
NA01-56-191A	1				
56-191D		COVER(L),SENSOR-AIR BAG			
NA01-56-181A	1	(W/O A.LOCK BRAKE)			
57-K00		MODULE,AIR BAG			
NA01-57-K00E	1				
00	INT-	NA3 NA5 NA4 NA6 BLACK			
57-K1X		SENSOR,AIR BAG			
NA75-57-K1XA	1				
57-K2X		SENSOR(R),AIR BAG			
NA01-57-K2XJ	1				-3902
A (NA01-57-K2XK)					
NA01-57-K2XK	1				3902-
57-K2Y		SENSOR(L),AIR BAG			
NA01-57-K2YJ	1				-3902
A (NA01-57-K2YK)					
NA01-57-K2YK	1				3902-
57-K40		SENSOR,AIR BAG-INNER			
NA01-57-K40D	1				
57-K45		COVER(R),SENSOR			
NA01-57-K45B	1				
57-K46		COVER(L),SENSOR			
NA01-57-K46B	1				
57-K47		COVER(C),SENSOR			
NA01-57-K47C	1				
57-K50		MODULE,AIR BAG PASSENGER			
NAY5-57-K7X	1	(W/AIR BAG-DRIV.&PASS.SIDE)			
00	INT-	NA3 NA4 NA5 NA6 BLACK			

3902 NA3***-50[illegible]487

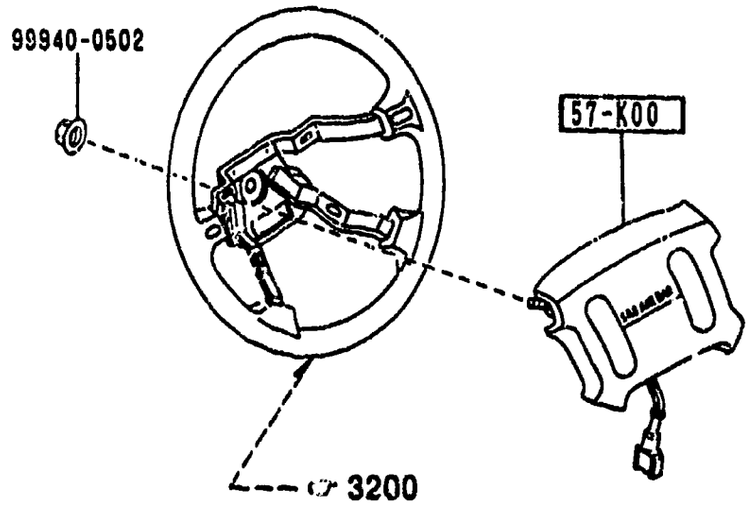

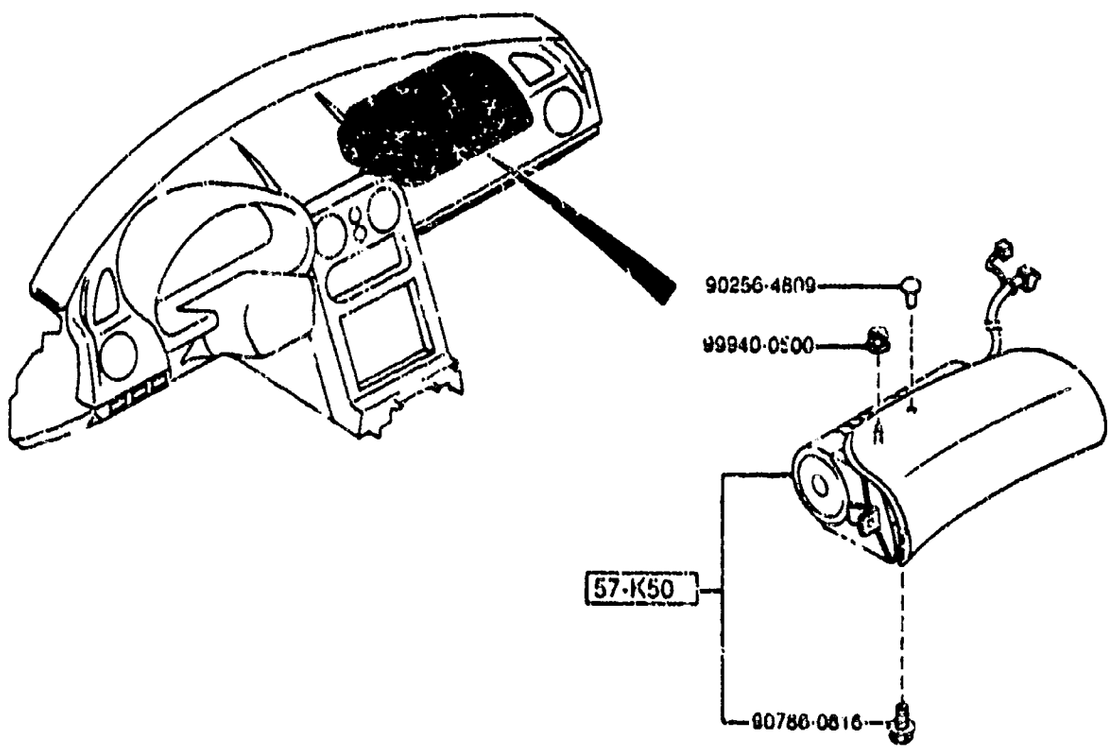

PART NO.	QTY	MODEL/RESTRICTION	MODEL/RESTRICTION	MODEL/RESTRICTION	FROM-TO
57-K96		CLIP			
FD01-57-K96	1				
57-K98		NUT			
FC66-57-K98	2				
69-885D		FASTENER			
NA01-56-145	4	(A.LOCK BRAKE)			
NA01-56-145	8	(W/O A.LOCK BRAKE)			

5800 FRONT DOORS

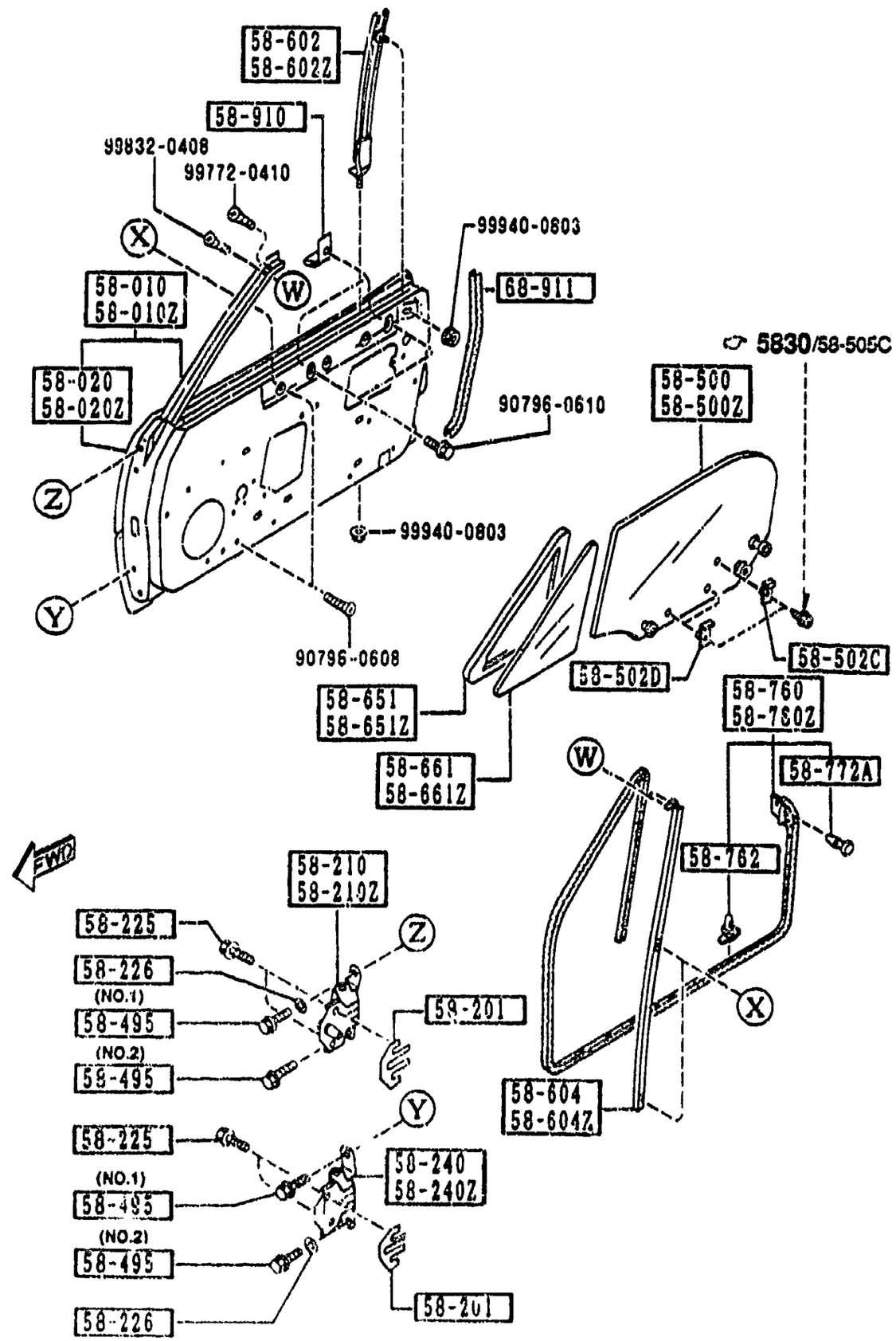

PART NO.	QTY	MODEL/RESTRICTION	MODEL/RESTRICTION	MODEL/RESTRICTION	FROM-TO
58-010		BODY(R),FRONT DOOR			
NAY3-58-02X	1				
58-010Z		BODY(L),FRONT DOOR			
NAY3-59-02X	1				
58-020		PANEL(R),OUT.-FRT DOOR			
NA52-58-030A	1				
58-020Z		PANEL(L),OUT.-FRT DOOR			
NA52-59-030A	1				
58-201		SHIM,HINGE-DOOR			
B092-58-201A	4				
58-210		HINGE(R),DOOR-UPPER			
FB01-58-210	1				
58-210Z		HINGE(L),DOOR-UPPER			
FB01-59-210	1				
58-225		BOLT,SETTING-HINGE LOWER			
B455-58-225	8				
58-226		WASHER,SETTING			
GJ21-58-226	4				
58-240		HINGE(R),DOOR-LOWER			
B156-58-240	1				
58-240Z		HINGE(L),DOOR-LOWER			
B156-59-240	1				
58-495		BOLT,SET			
BA54-58-225	4	(ILLUST. NO.1)			
S085-58-225	4	(ILLUST. NO.2)			
58-500		GLASS(R),DOOR-FRT			
NA01-58-510	1				

5800 FRONT DOORS

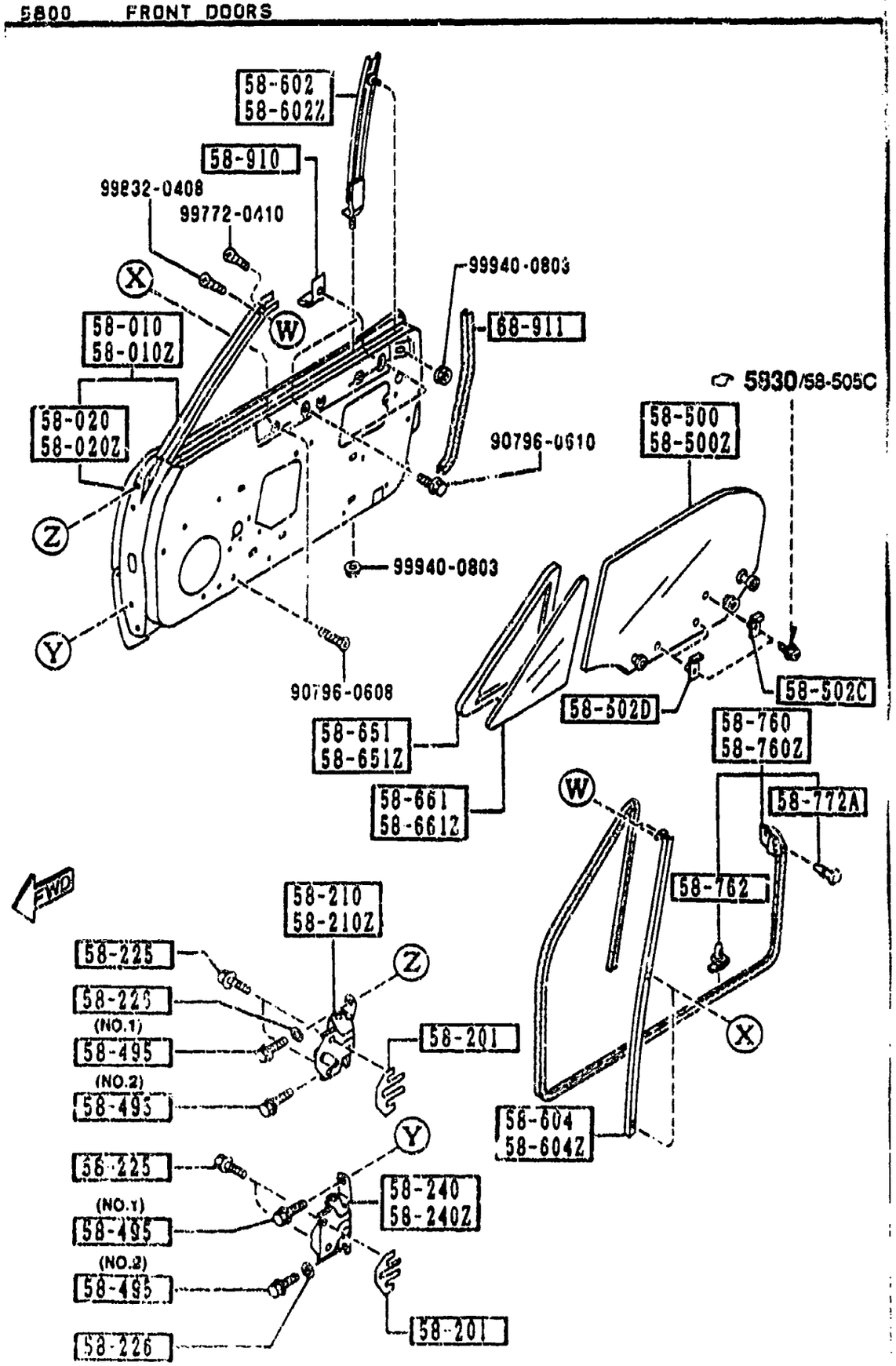

PART NO.	QTY	MODEL/RESTRICTION	MODEL/RESTRICTION	MODEL/RESTRICTION	FROM-TO
58-500Z NA01-59-510	1	GLASS(L),DOOR-FRT			
58-502C 3235-58-502	2	GROMMET,SCREW			
58-502D U839-58-502A	4	GROMMET,SCREW-DOOR GLASS			
58-602 NA01-58-603D	1	GUIDE'B'(R),GLASS			
58-602Z NA01-59-603D	1	GUIDE'B'(L),GLASS			
58-604 NA01-58-604B	1	CHANNEL(R),DIVISION-DOOR			
58-604Z NA01-59-604B	1	CHANNEL(L),DIVISION-DOOR			
58-651 NA01-58-651A	1	WEATHERSTRIP(R)			
58-651Z NA01-59-651A	1	WEATHERSTRIP(L)			
58-661 NA01-58-661	1	GLASS(R),VENTILATOR			
58-661Z NA01-59-661	1	GLASS(L),VENTILATOR			
58-760 NA01-58-760D A (NA01-58-760E)	1	WEATHERSTRIP(R),DOOR			-4701
*NA01-58-760E	1				4701-
58-760Z NA01-59-760D A (NA01-59-760E)	1	WEATHERSTRIP(L),DOOR			-4701

4701 NA3***-521312

5800 FRONT DOORS

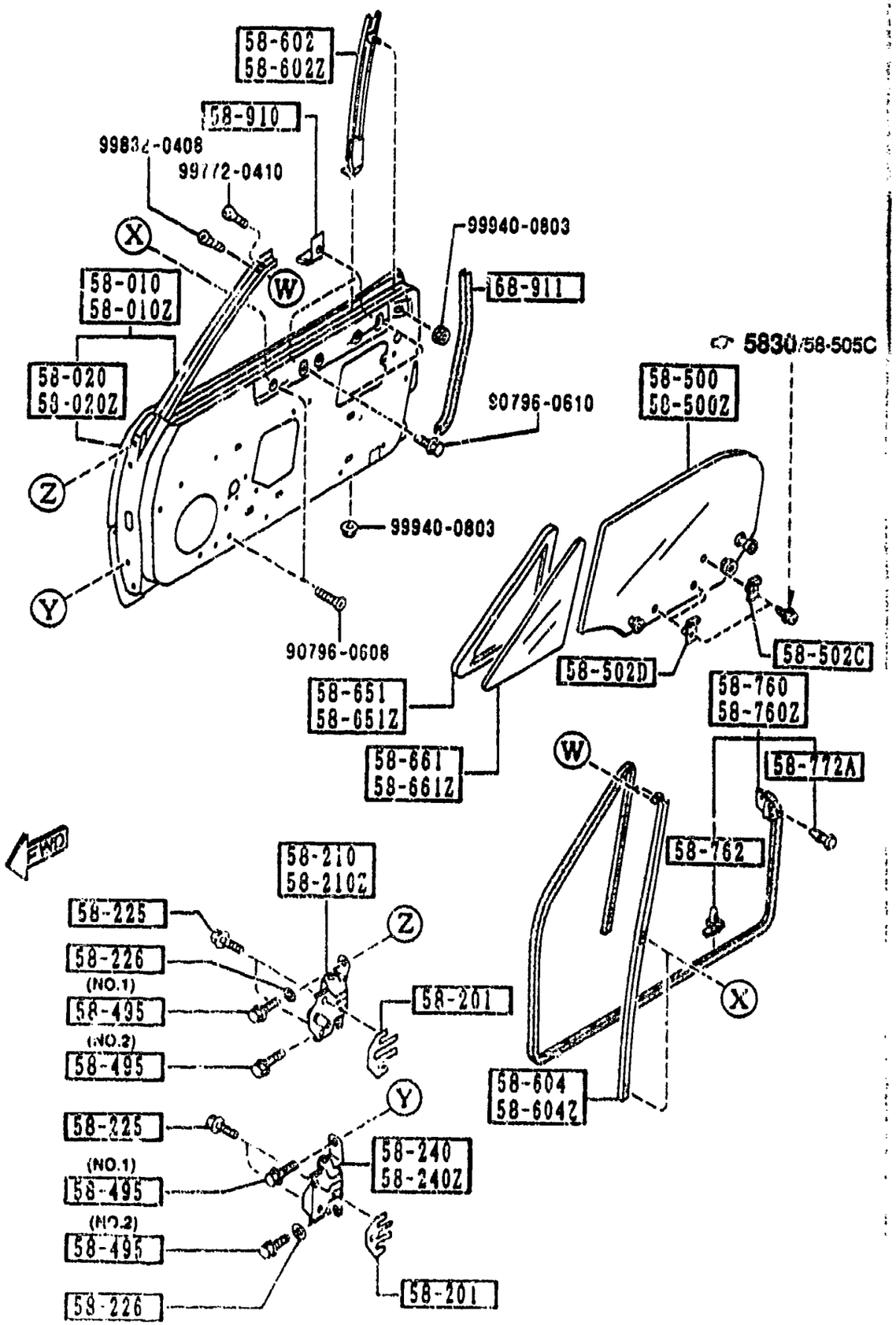

PART NO.	QTY	MODEL/RESTRICTION	MODEL/RESTRICTION	MODEL/RESTRICTION	FROM-TO
CONT'D					
*NA01-59-760E	1				4701-
58-762		FASTENER			
G031-58-762	42				
58-772A		FASTENER			
1011-58-772	4				
58-910		STOPPER,GLASS			
H272-58-911	4				
68-911		WELT,SEAMING			
NA01-68-911	2				
00	INT-	NA3 NA5 NA4 NA6 BLACK			

4701 NA3***-521312

5830 FRONT DOOR MECHANISMS

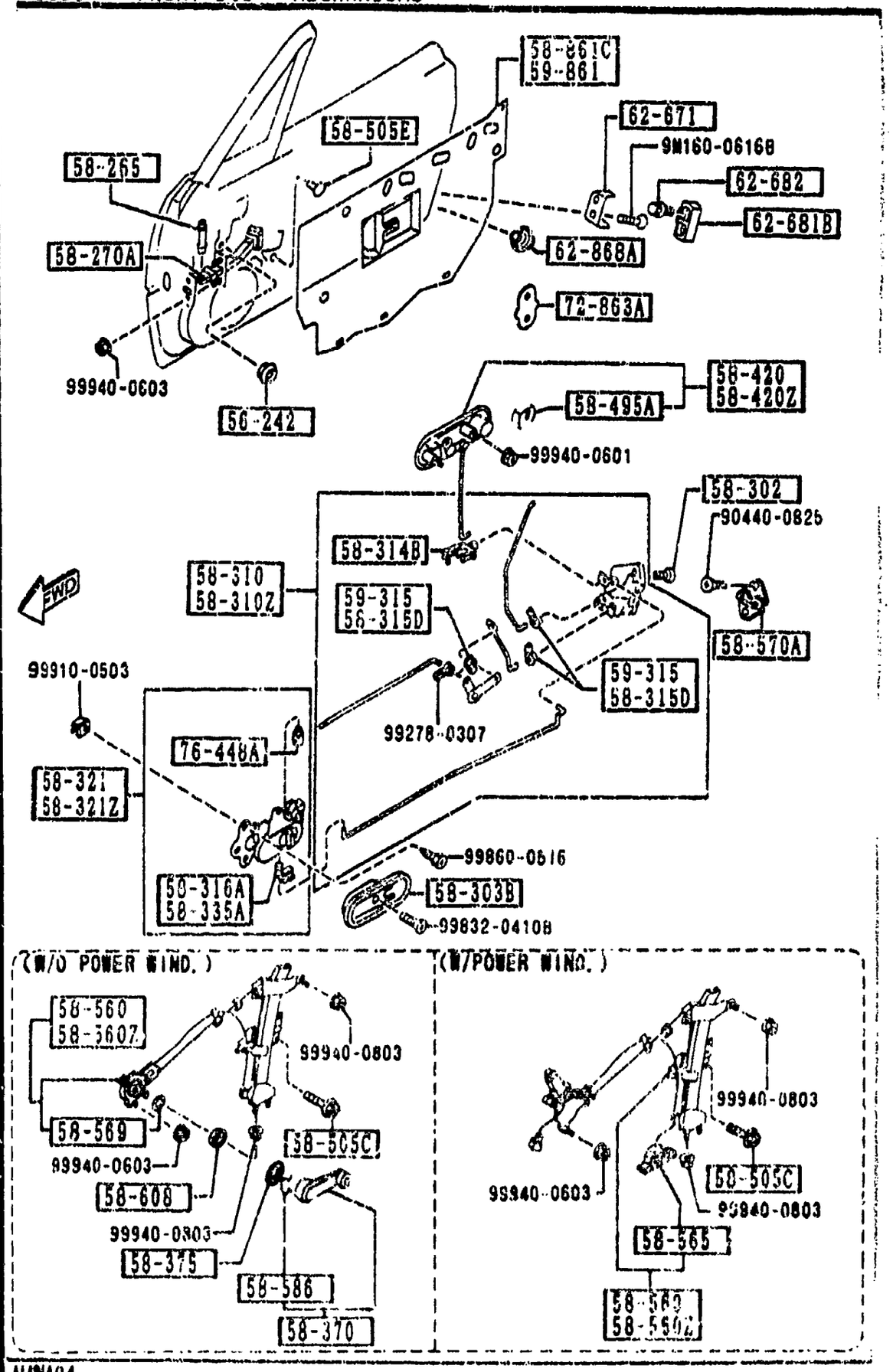

PART NO.	QTY	MODEL/RESTRICTION	MODEL/RESTRICTION	MODEL/RESTRICTION	FROM-TO
56-242 0118-56-242B	2	PLUG,DRAIN			
58-265 BC1D-58-265	2	PIN,CHECKER			
58-270A NA01-58-270A	2	CHECKER,DOOR			
58-302 HG30-58-302A	6	SCREW,TAPPING-DOOR LOCK			
58-303B NA01-58-303	2	COVER,INNER HANDLE			
00	INT-	NA3 NA5 NA4 NA6 BLACK			
58-310 NA01-58-310B	1	LOCK(R),DOOR			
58-310Z NA01-59-310B	1	LOCK(L),DOOR			
58-314B H043-72-411	2	JOINT			
58-315D G030-58-315	3	CLIP (R) (IN SPITE OF (R),THIS PART IS APPLICABLE TO LH SIDE)			
58-316A BC71-59-335	1	CLIP (FOR RIGHT)			
58-321 NA01-58-330A	1	HANDLE(R),INNER			
00	INT-	NA3 NA5 NA4 NA6 BLACK			
58-321Z NA01-59-330A	1	HANDLE(L),INNER			
00	INT-	NA3 NA5 NA4 NA6			

5830 FRONT DOOR MECHANISMS

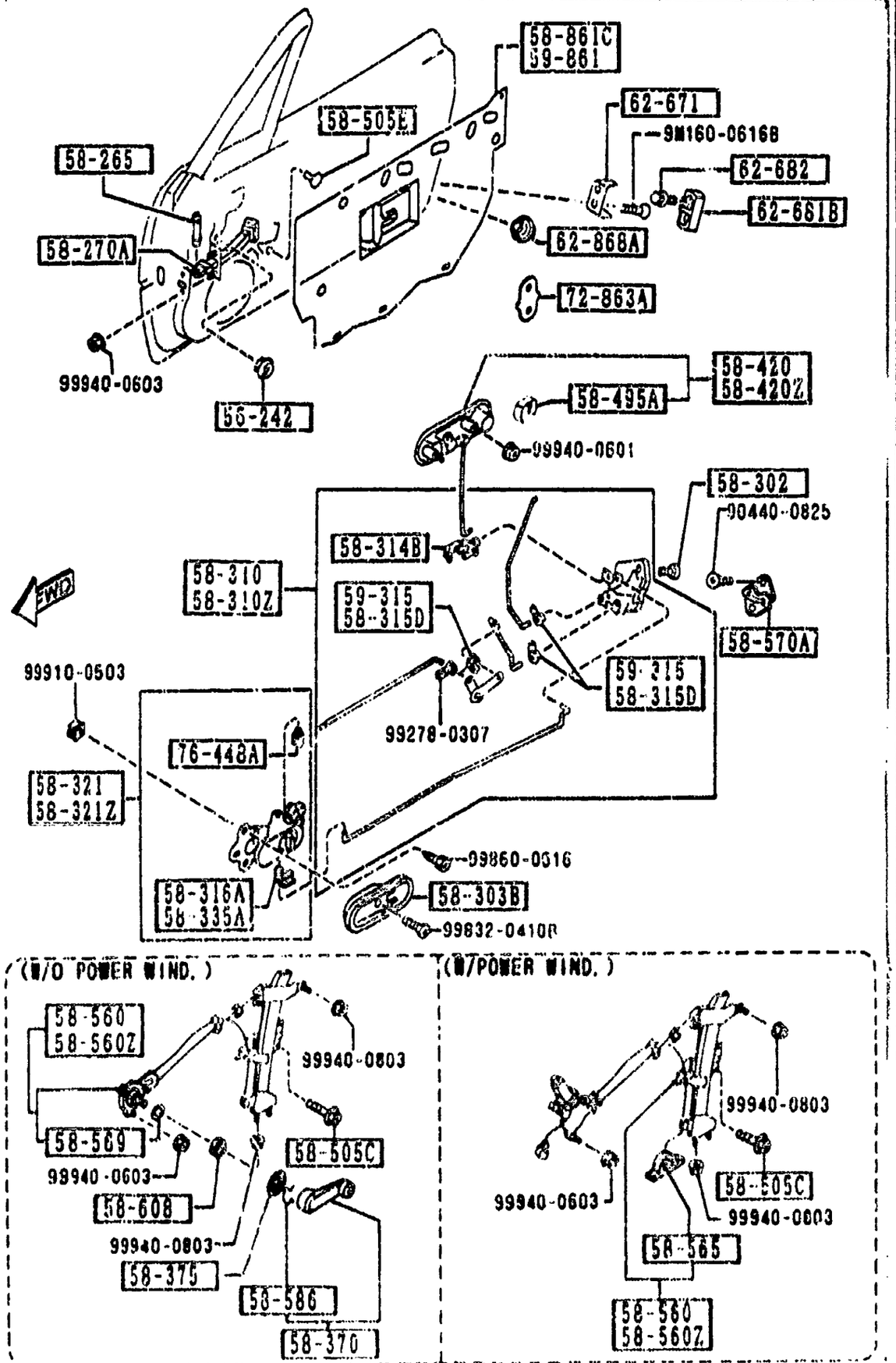

PART NO.	QTY	MODEL/RESTRICTION	MODEL/RESTRICTION	MODEL/RESTRICTION	FROM-TO
CONT'D		BLACK			
58-335A		CLIP			
FB01-58-335	1	(FOR LEFT)			
58-370		HANDLE,REGULATOR			
S004-58-580A	2	BASE, PKG-A, PKG-R, (W/O POWER WIND.)			
00	INT-	NA3 NA5 NA4 NA6 BLACK			
58-375		ESCUTCHEON			
B001-58-582A	2	BASE, PKG-A, PKG-R, (W/O POWER WIND.)			
00	INT-	NA3 NA5 NA4 NA6 BLACK			
58-420		HANDLE(R),OUT.			
NA01-58-410D	1				
58-420Z		HANDLE(L),OUT.			
NA01-59-410D	1				
58-495A		RETAINER,LOCK CYL.			
G211-58-495	2				
58-505C		SCREW,WINDOW REGULATOR			
B092-58-505	6				
58-505E		CAP			
B092-58-355	2	BASE, PKG-A, PKG-R, (W/O POWER WIND.)			
58-560		REGULATOR(R),WINDOW			
NA02-58-560D AN(NA02-58-560E)	1				-3C01
NA01-58-560D A (NA01-58-560E)	1				-4419
NA02-58-560E A (NA02-58-560F)	1				3C01-4419
*NA02-58-560F A (NA02-58-560G)	1				4419-4608
*NA01-58-560E A (NA01-58-560F)	1				4419-4701

3C01 NA5***-507607
4419 NA3***-517950
4608 NA3***-519029
4701 NA3***-521312

5830 -3 FRONT DOOR MECHANISMS

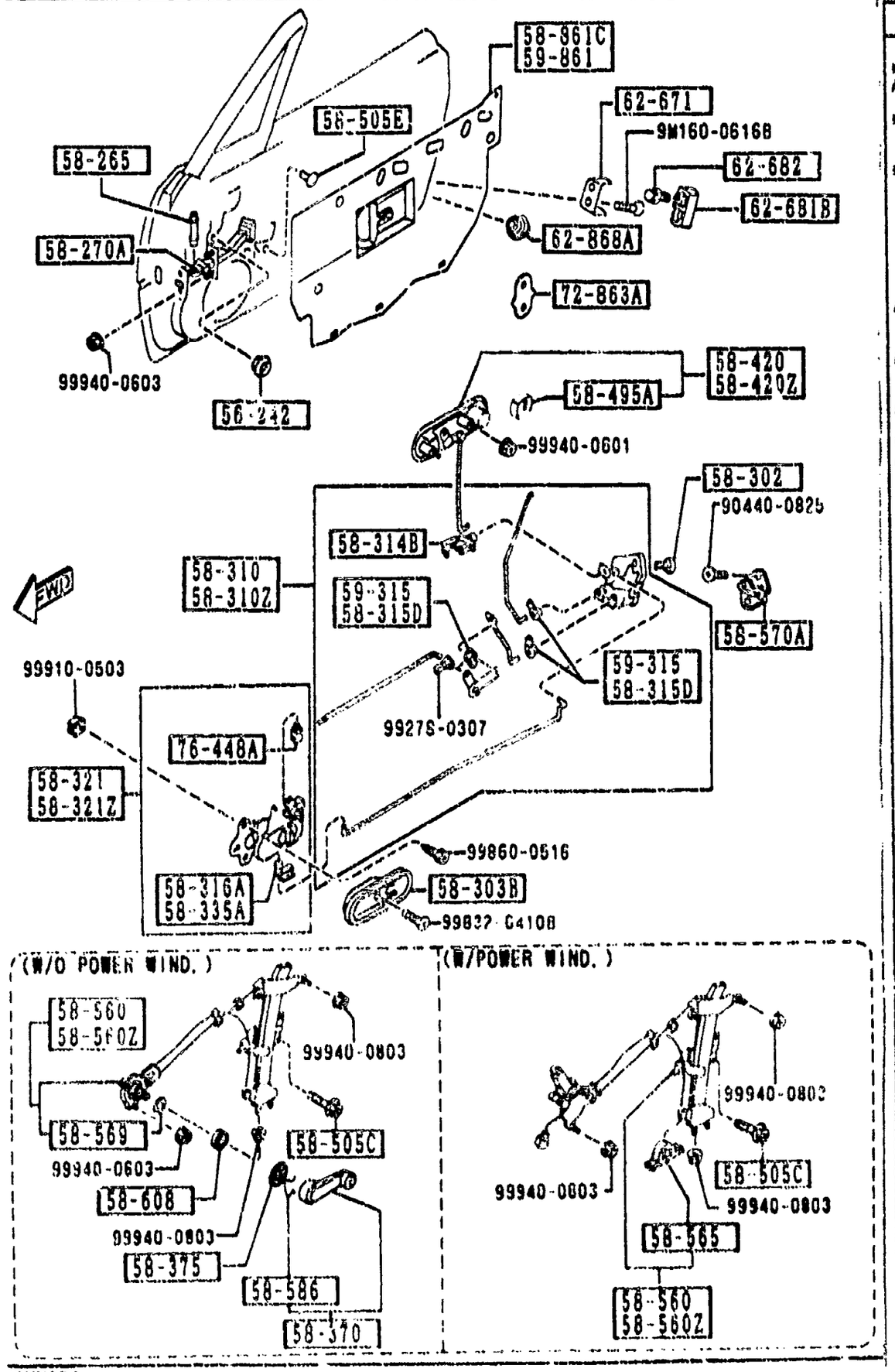

PART NO.	QTY	MODEL/RESTRICTION	MODEL/RESTRICTION	MODEL/RESTRICTION	FROM-TO
CONT'D					
*NA02-58-560G A (NA02-58-560H)	1				4608-4701
*NA01-58-560F	1	BASE, PKG-A, PKG-R, (W/O POWER WIND.)			4701-
*NA02-58-560H	1	PKG-B, PKG-C, RICO-O PT-PKG, (W/POWER WIND)			4701-
58-560Z		REGULATOR(L),WINDOW			
NA02-59-560D AN(NA02-59-560E)	1				-3C01
NA01-59-560D A (NA01-59-560E)	1				-4419
NA02-59-560E A (NA02-59-560F)	1				3C01-4419
*NA02-59-560F A (NA02-59-560G)	1				4419-4608
*NA01-59-560E A (NA01-59-560F)	1				4419-4701
*NA02-59-560G A (NA02-59-560H)	1				4608-4701
*NA01-59-560F	1	BASE, PKG-A, PKG-R, (W/O POWER WIND.)			4701-
*NA02-59-560H	1	PKG-B, PKG-C, RICO-O PT-PKG, (W/POWER WIND.)			4701-
58-565		RUBBER,STOPPER			
HG30-58-565	2	PKG-B, PKG-C, RICO-O PT-PKG, (W/POWER WIND.)			
58-569		GASKET,WINDOW REGULATOR			
B092-58-569	2	BASE, PKG-A, PKG-R, (W/O POWER WIND.)			
58-570A		STRIKER			
B001-58-361A	2				
58-586		RING,SNAP			
B001-58-585	2	BASE, PKG-A, PKG-R, (W/O POWER WIND.)			
58-608		PAD			
B092-58-863A	2	BASE, PKG-A, PKG-R, (W/O POWER WIND.)			-3C01

3C01 NA3***-507607
4419 NA3***-517950
4608 NA3***-519829
4701 NA3***-521312

5830 FRONT DOOR MECHANISMS

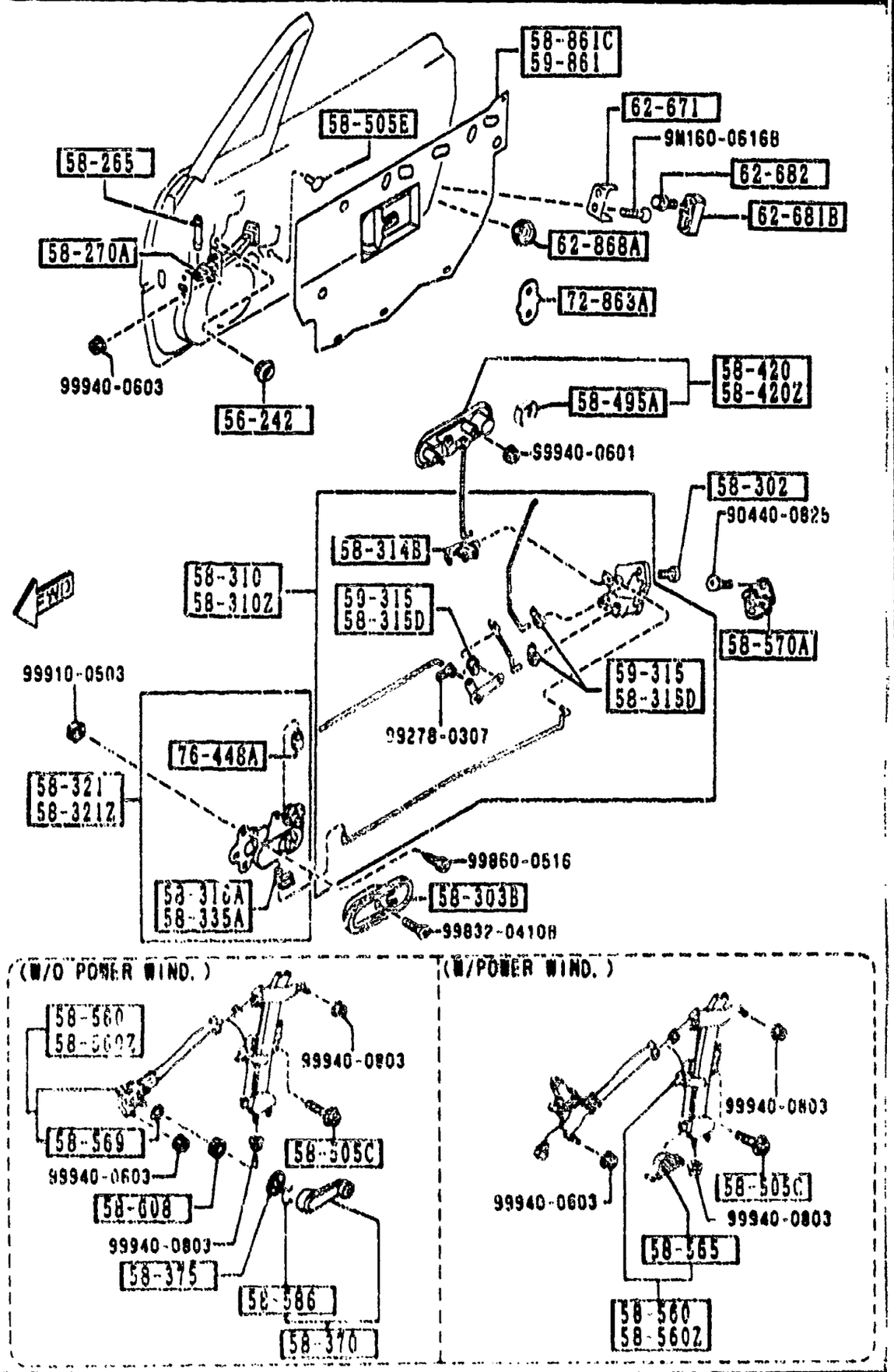

PART NO.	QTY	MODEL/RESTRICTION	MODEL/RESTRICTION	MODEL/RESTRICTION	FROM-TO
58-861C		SCREEN(R),FRONT DOOR			
NA01-58-861A	1	BASE, PKG-A, PKG-R, (W/O POWER WIND.)			
NA02-58-861A	1	PKG-B, PKG-C, RICO-O PT-PKG, (W/POWER WIND.)			
59-315		CLIP			
G030-59-315	3	(FOR RIGHT)			
59-861		SCREEN(L),FRONT DOOR			
NA01-59-861A	1	BASE, PKG-A, PKG-R, (W/O POWER WIND.)			
NA02-59-861A	1	PKG-B, PKG-C, RICO-O PT-PKG, (W/POWER WIND.)			
62-671		DOVETAIL,LIFT GATE			
S084-62-671	2				
62-681B		WEDGE,DOOR-FRONT			
NA01-62-681	2				
62-682		SCREW,WEDGE-LIFT GAT E			
B216-62-682	4				
62-868A		COVER,HOLE-LIFT GATE			
B499-62-868	2				
72-863A		PAD			
H260-72-863B	2				-3C01
76-448A		CLIP			
G030-76-448	2				

3C01 NA3###-507607

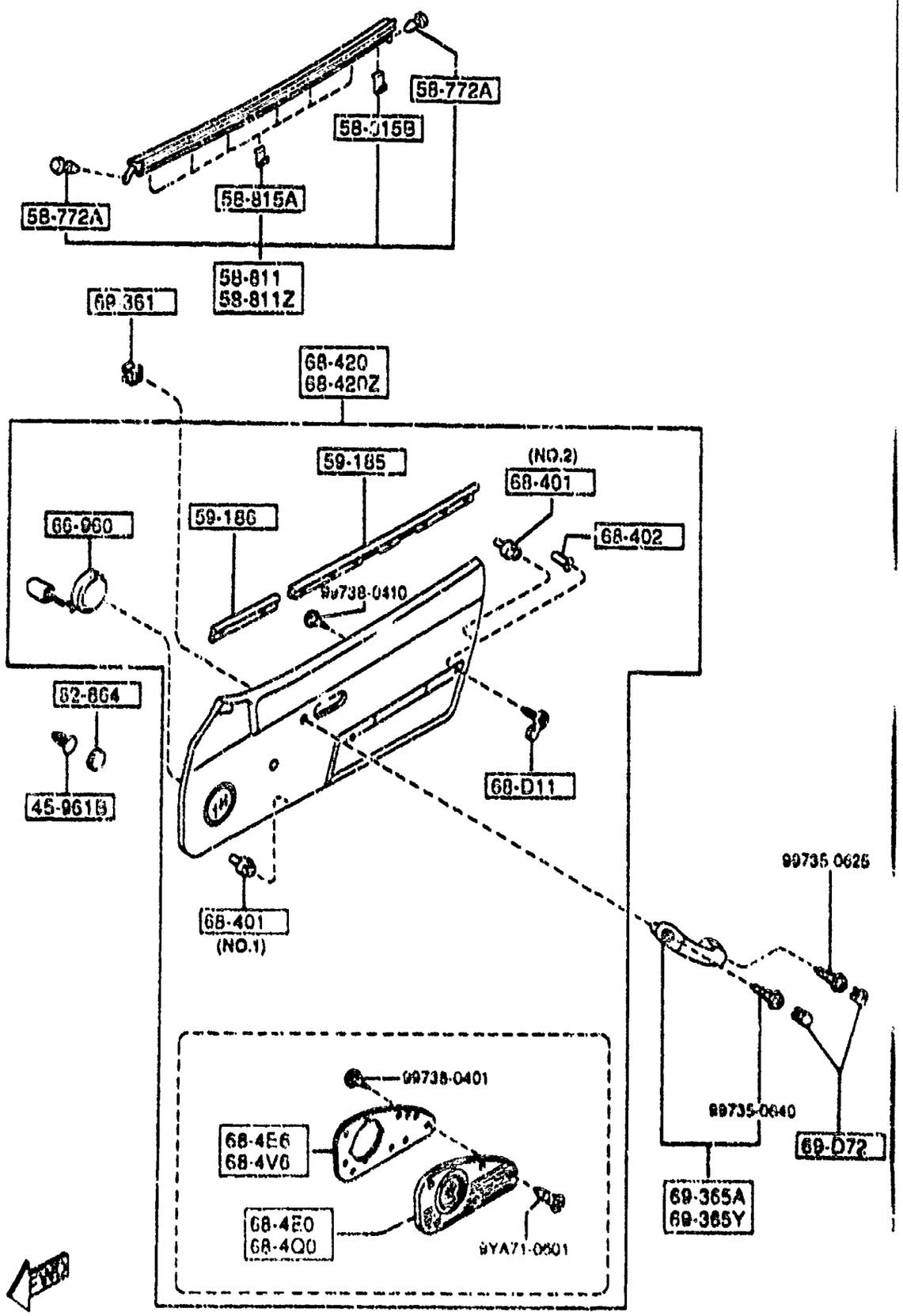

PART NO.	QTY	MODEL/RESTRICTION	MODEL/RESTRICTION	MODEL/RESTRICTION	FROM-TO
45-961B		CAP			
H002-45-961	2	BASE, (TDA-PLASTIC KICKPLATE)			
H002-45-961	2	OPT, (TDB-STAINLESS KICKPLATE)			-3A01
H002-45-961	4	OPT, (TDB-STAINLESS KICKPLATE)			3A01-
58-772A		FASTENER			
1011-58-772	4				
58-811		WEATHERSTRIP(R),OUT.			
NA01-58-810D	1				
58-811Z		WEATHERSTRIP(L),OUT.			
NA01-59-810D	1				
58-815A		CLIP,WEATHERSTRIP-OUTER			
NA01-58-815	12				
58-815B		CLIP'A',WEATHERSTRIP-OUT			
B157-58-815	2				
59-185		WEATHERSTRIP NO.1			
NA01-58-821	2				
59-186		WEATHERSTRIP NO.2			
NA02-58-821	2				
62-864		TAPE,PROTECTOR-STOPPER			
G043-62-864A	2				
66-960		SPEAKER,LOUD-FRONT			
N019-66-960A	2	PKG-B-OPT, PKG-C-OPT (AM/FM,W/C.D.,W/HEAD RR SPK. W/SENSORY SOUND)			
68-D11		CLP,SCREW			
B501-68-D11B	2				

3A01 NA3***-505179

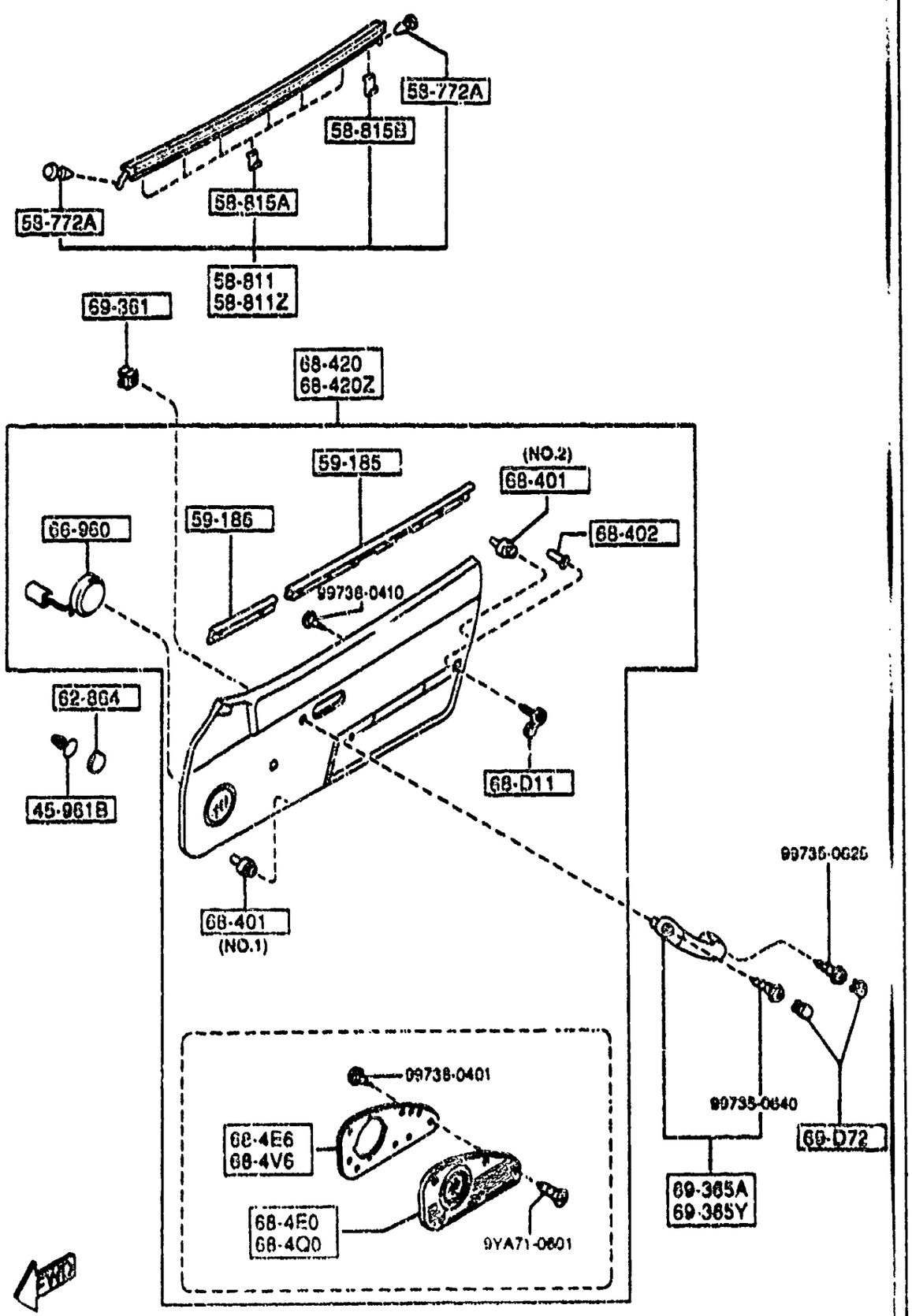

AUNA04

PART NO.	QTY	MODEL/RESTRICTION	MODEL/RESTRICTION	MODEL/RESTRICTION	FROM-TO
CONT'D					
00	INT-	NA3 BLACK			
67	INT-	NA4 NA5 TAN			
68-4E0		PLATE(R),KICK-D.TRIM			
N020-68-4E1A	1	OPT, (TDB-STAINLESS KICKP LATE,W/ P.WIND.)			
68-4E6		PLATE(R)			
N020-68-4E6	1	OPT, (TDB-STAINLESS KICKP LATE,W/ P.WIND.)			
68-4Q0		PLATE(L),KICK-D.TRIM			
N020-68-4V1A	1	OPT, (TDB-STAINLESS KICKP LATE,W/ P.WIND.)			
68-4V6		PLATE(L)			
N020-68-4V6	1	OPT, (TDB-STAINLESS KICKP LATE,W/ P.WIND.)			
68-401		FASTENER,DOOR TRIM			
B100-68-401	16	(ILLUST. NO.1)			
W201-68-401	12	(ILLUST. NO.2)			
68-402		GROMMET,SCREW			
R110-68-429	2				
68-420		TRIM(R),DOOR			
N026-68-420B	1	OPT, (TDB-STAINLESS KICKP LATE,W/P. WIND,W/O S ENSORY SOUND.)			
00	INT-	NA3 BLACK			
80	INT-	NA5 BLACK/TAN			
N027-68-420B	1	OPT, (TDB-STAINLESS KICKP LATE,W/P. WIND,W/SEN SORY SOUND.)			
00	INT-	NA3 BLACK			
80	INT-	NA5 BLACK/TAN			
N028-68-420B	1	BASE, PKG-A, PKG-R, (TDA-PLASTIC KICKPLA TE,W/O P. WIND,W/O S			

CAT. AUNA04-03

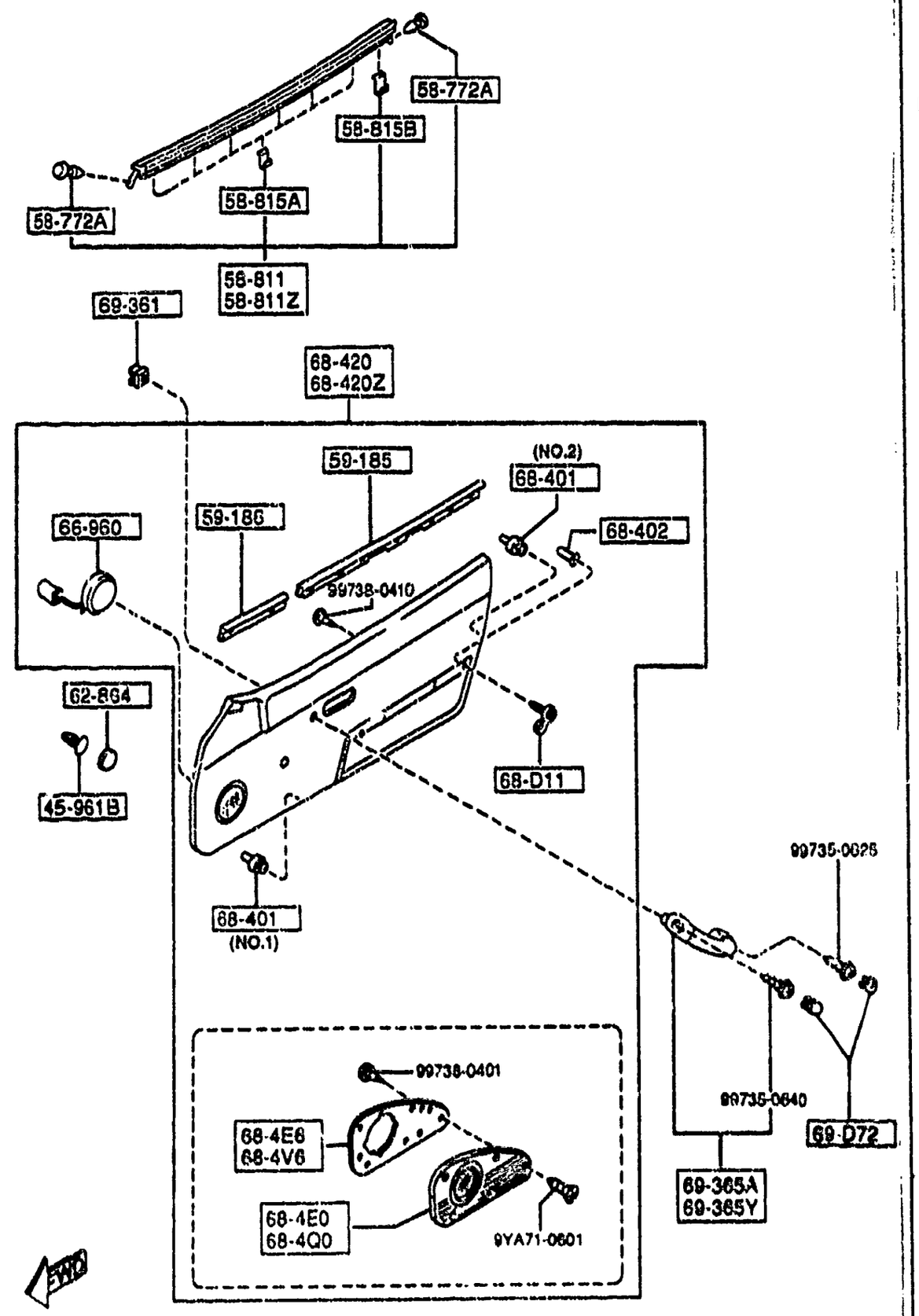

PART NO.	QTY	MODEL/RESTRICTION	MODEL/RESTRICTION	MODEL/RESTRICTION	FROM-TO
CONT'D		ENSORY SOUND.)			
00	INT-	NA3 BLACK			
80	INT-	NA5 BLACK/TAN			
N029-68-420B	1	(TDA-PLASTIC KICKPLATE,W/O P. WIND,W/SENSORY SOUND.)			
00	INT-	NA3 BLACK			
80	INT-	NA5 BLACK/TAN			
N030-68-420B	1	PKG-B, PKG-C, RICO-OPT-PKG, (TDA-PLASTIC KICKPLATE,W/P. WIND,W/O SENSORY SOUND.)			
00	INT-	NA3 BLACK			
80	INT-	NA5 BLACK/TAN			
N031-68-420B	1	PKG-B-OPT, PKG-C-OPT, (TDA-PLASTIC KICKPLATE,W/P. WIND,W/SENSORY SOUND.)			
00	INT-	NA3 BLACK			
80	INT-	NA5 BLACK/TAN			
68-420Z		TRIM(L),DOOR			
N026-68-450B	1	OPT, (TDB-STAINLESS KICKPLATE,W/P. WIND,W/O SENSORY SOUND.)			
00	INT-	NA3 BLACK			
80	INT-	NA5 BLACK/TAN			
N027-68-450B	1	OPT, (TDB-STAINLESS KICKPLATE,W/P. WIND,W/SENSORY SOUND.)			
00	INT-	NA3 BLACK			
80	INT-	NA5 BLACK/TAN			
N028-68-450B	1	BASE, PKG-A, PKG-R. (TDA-PLASTIC KICKPLATE,W/O P. WIND,W/O SENSORY SOUND.)			
00	INT-	NA3 BLACK			
80	INT-	NA5 BLACK/TAN			
N029-68-450B	1	(TDA-PLASTIC KICKPLATE,W/O P. WIND,W/SENSORY SOUND.)			

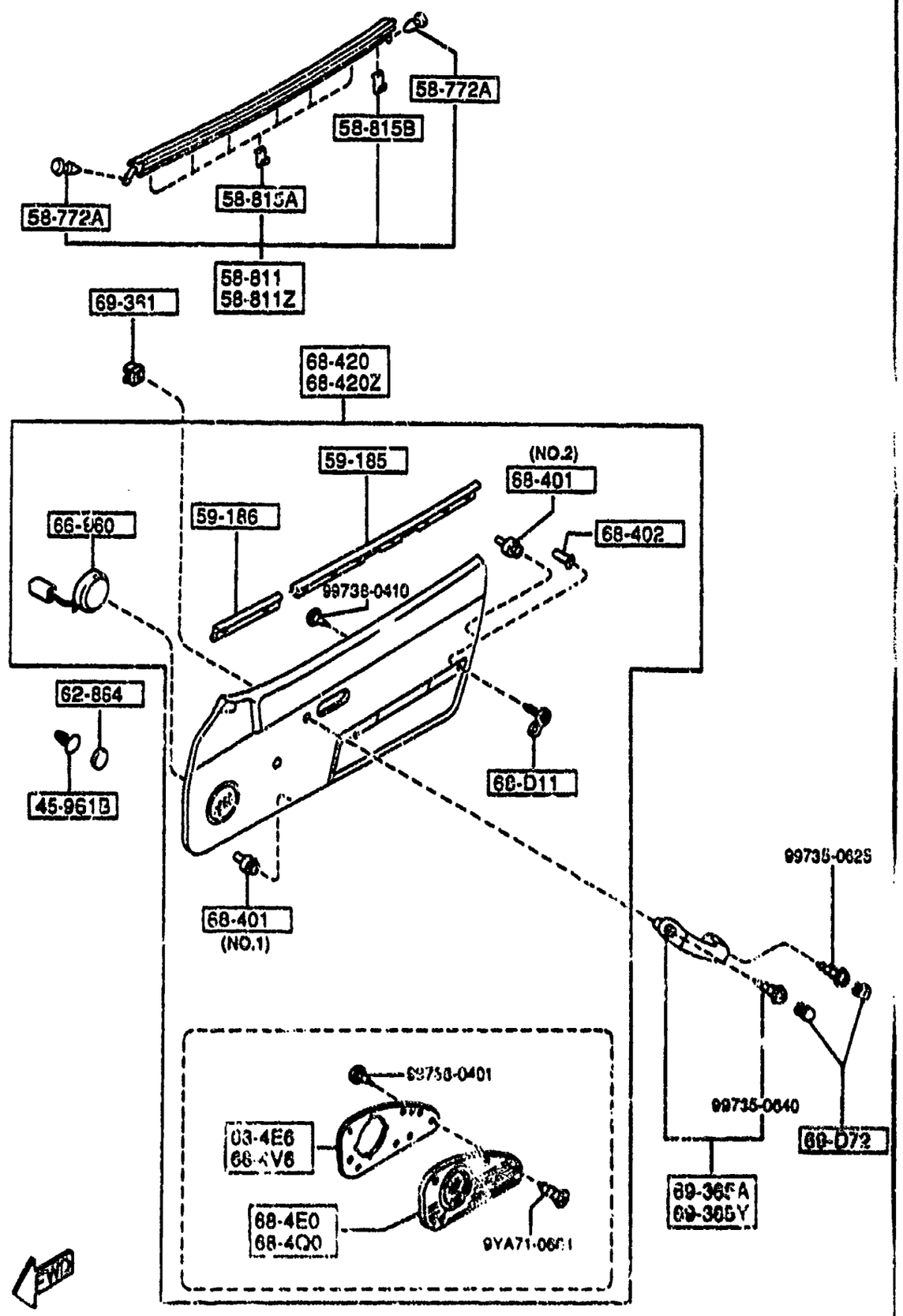

PART NO.	QTY	MODEL/RESTRICTION	MODEL/RESTRICTION	MODEL/RESTRICTION	FROM-TO
CONT'D					
00	INT-	NA3 BLACK			
80	INT-	NA5 BLACK/TAN			
N030-68-450B	1	PKG-B, PKG-C, RICO-OPT-PKG, (TDA-PLASTIC KICKPLATE,W/P. WIND,W/O SENSORY SOUND.)			
00	INT-	NA3 BLACK			
80	INT-	NA5 BLACK/TAN			
N031-68-450B	1	PKG-B-OPT, PKG-C-OPT, (TDA-PLASTIC KICKPLATE,W/P. WIND,W/SENSORY SOUND.)			
00	INT-	NA3 BLACK			
80	INT-	NA5 BLACK/TAN			
69-D72		CAP,ASSIST GRIP			
N026-69-D72	2				
00	INT-	NA3 NA5 NA4 NA6 BLACK			
69-361		GROMMET,SCREW			
B316-69-361	4				
69-365A		GRIP(R),ASSIST			
N026-69-D70	1				
00	INT-	NA3 NA5 NA4 NA6 BLACK			
69-365Y		GRIP(L),ASSIST			
N026-69-D90	1				
00	INT-	NA3 NA5 NA4 NA6 BLACK			

6100 HEATER

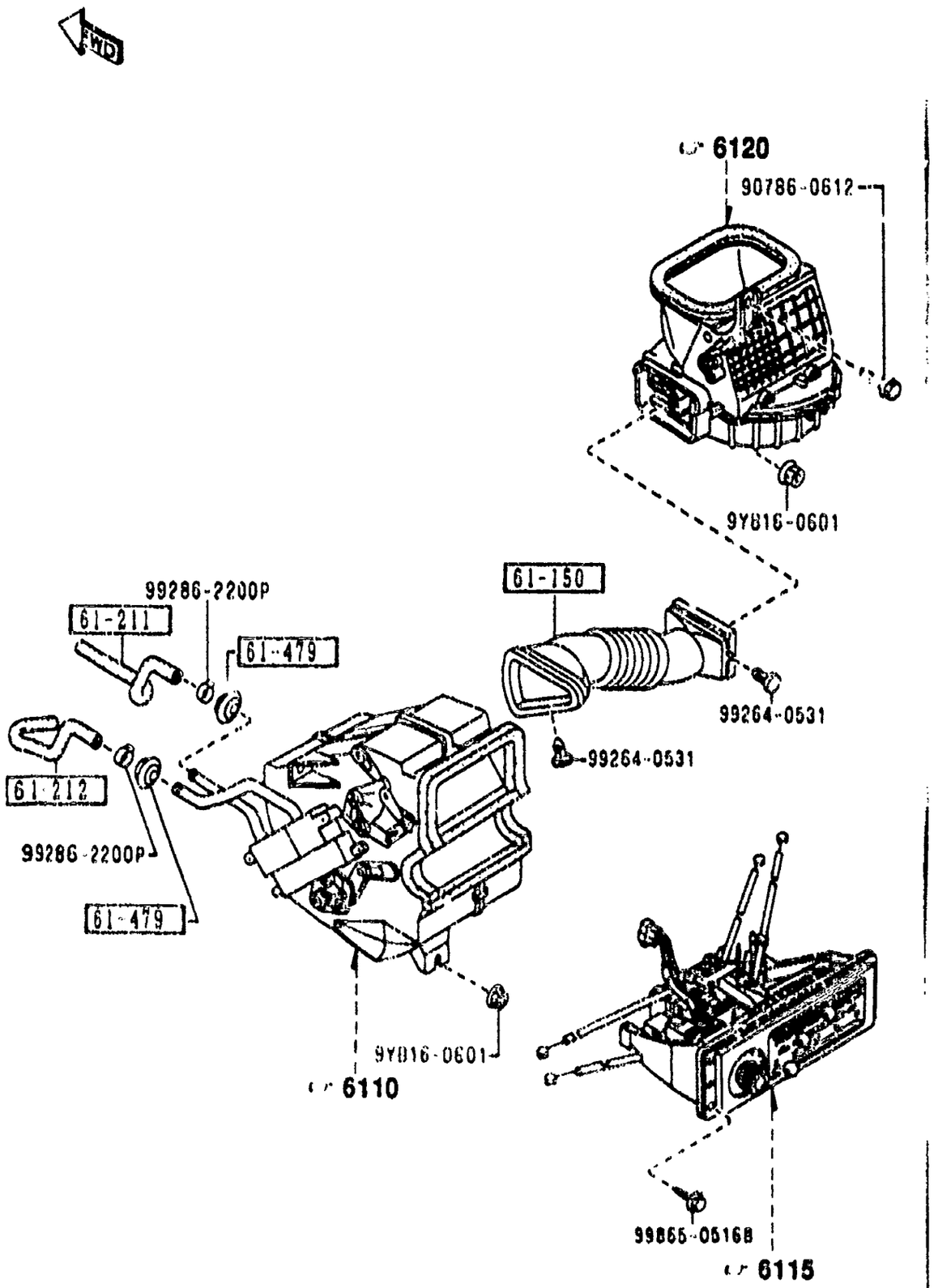

PART NO	QTY	MODEL/RESTRICTION	MODEL/RESTRICTION	MODEL/RESTRICTION	FROM-TO
61-150		DUCT,AIR			
NA01-61-150A	1				
61-211		HOSE NO.1,WATER			
NA75-61-211	1				
61-212		HOSE NO.2,WATER			
NA75-61-212	1				
61-479		GROMMET			
8871-61-219A	2				

6110 HEATER UNIT COMPONENTS

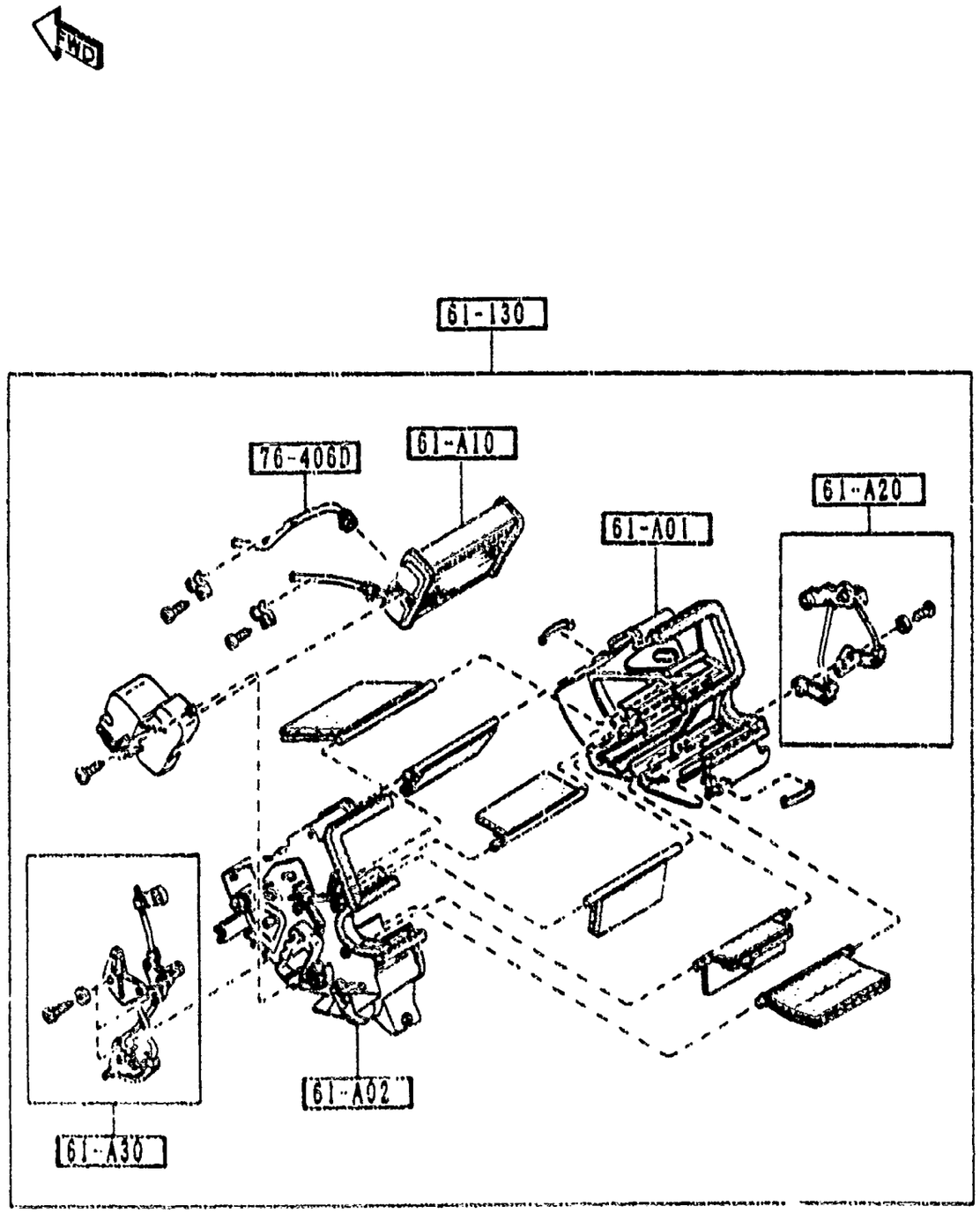

PART NO.	QTY	MODEL/RESTRICTION	MODEL/RESTRICTION	MODEL/RESTRICTION	FROM-TO
61-A01 NA01-61-A01	1	CASE'A',HEATER UNIT			
61-A02 NA01-61-A02	1	CASE'B',HEATER UNIT			
61-A10 NA75-61-A10	1	CORE,HEATER UNIT			
61-A20 NA01-61-A20	1	LINK SET,TEMP			
61-A30 NA01-61-A30	1	LINK SET,MODE			
61-130 NA75-61-130	1	HEATER UNIT			
76-406D NA75-61-A15	1	PIPE,HEATER UNIT			

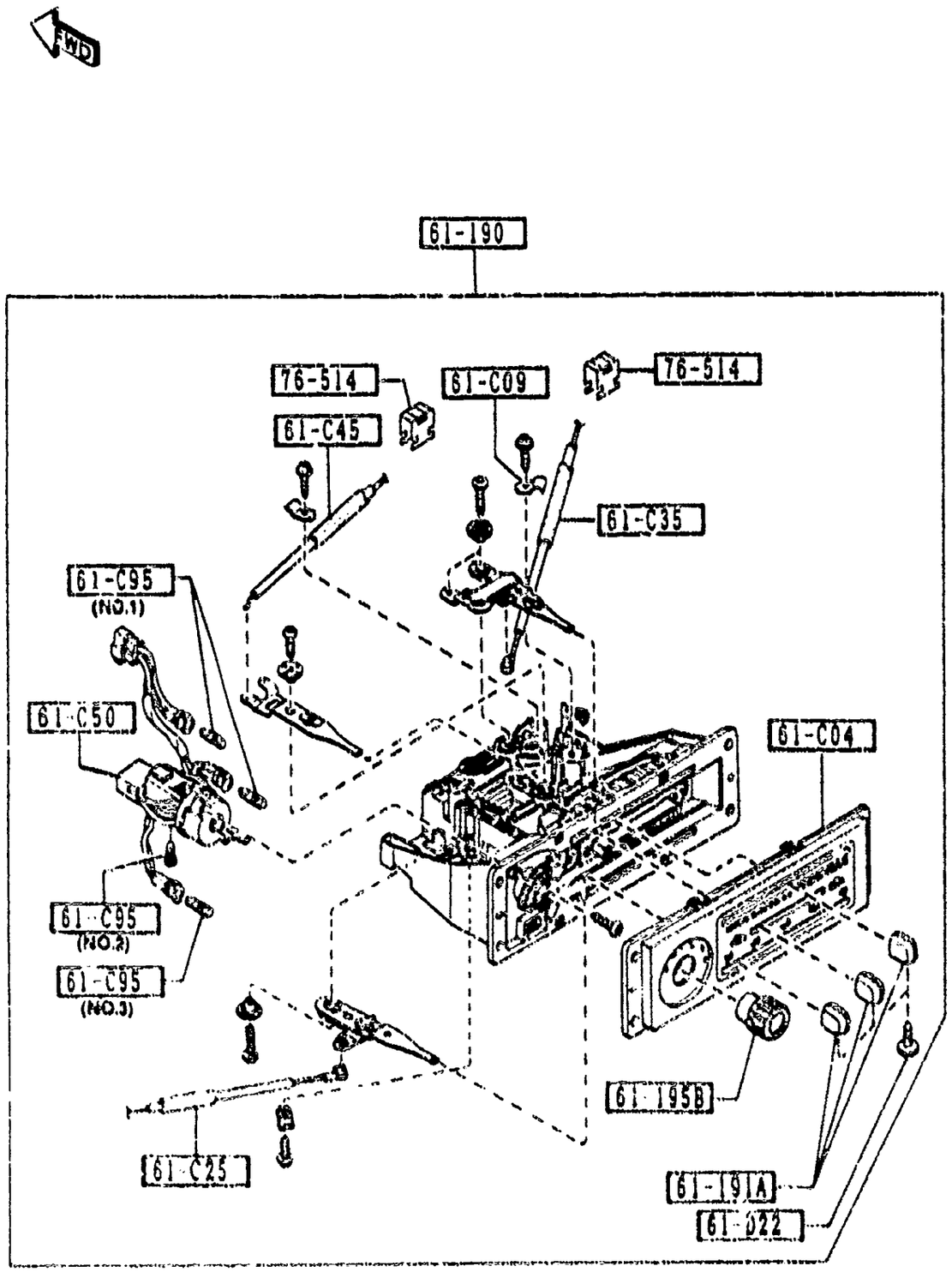

PART NO.	QTY	MODEL/RESTRICTION	MODEL/RESTRICTION	MODEL/RESTRICTION	FROM-TO
61-C04		PANEL,PLATE-MODE CONTROL			
NA01-61-C04A	1				
61-C09		CLIP,HEATER CONTROL			
H260-61-C09	1				
61-C25		WIRE,TEMP. CONTROL			
NA01-61-C25	1				
61-C35		WIRE,MODE CONTROL			
NA01-61-C35	1				
61-C45		WIRE,RECYCLE & FRESH			
NA75-61-C45	1				
61-C50		SWITCH,FAN-HEATER CONTROL			
NA01-61-C50	1				
61-C95		BULB,MODE CONTROL			
NA01-61-C95	2	(ILLUST. NO.1)			
NA02-61-C95	1	(ILLUST. NO.2)			
NA03-61-C95	1	(ILLUST. NO.3)			
61-D22		SCREW,RR HEATER UNIT			
NA01-61-D22	3				
61-190		CONTROL,HEATER			
NA75-61-190B	1				
61-191A		KNOB NO.1			
NA01-61-191	3				
61-195B		KNOB,FAN SWITCH			
NA01-61-195	1				
76-514		CLIP			
B001-76-526	2				

6120 HEATER BLOWER COMPONENTS

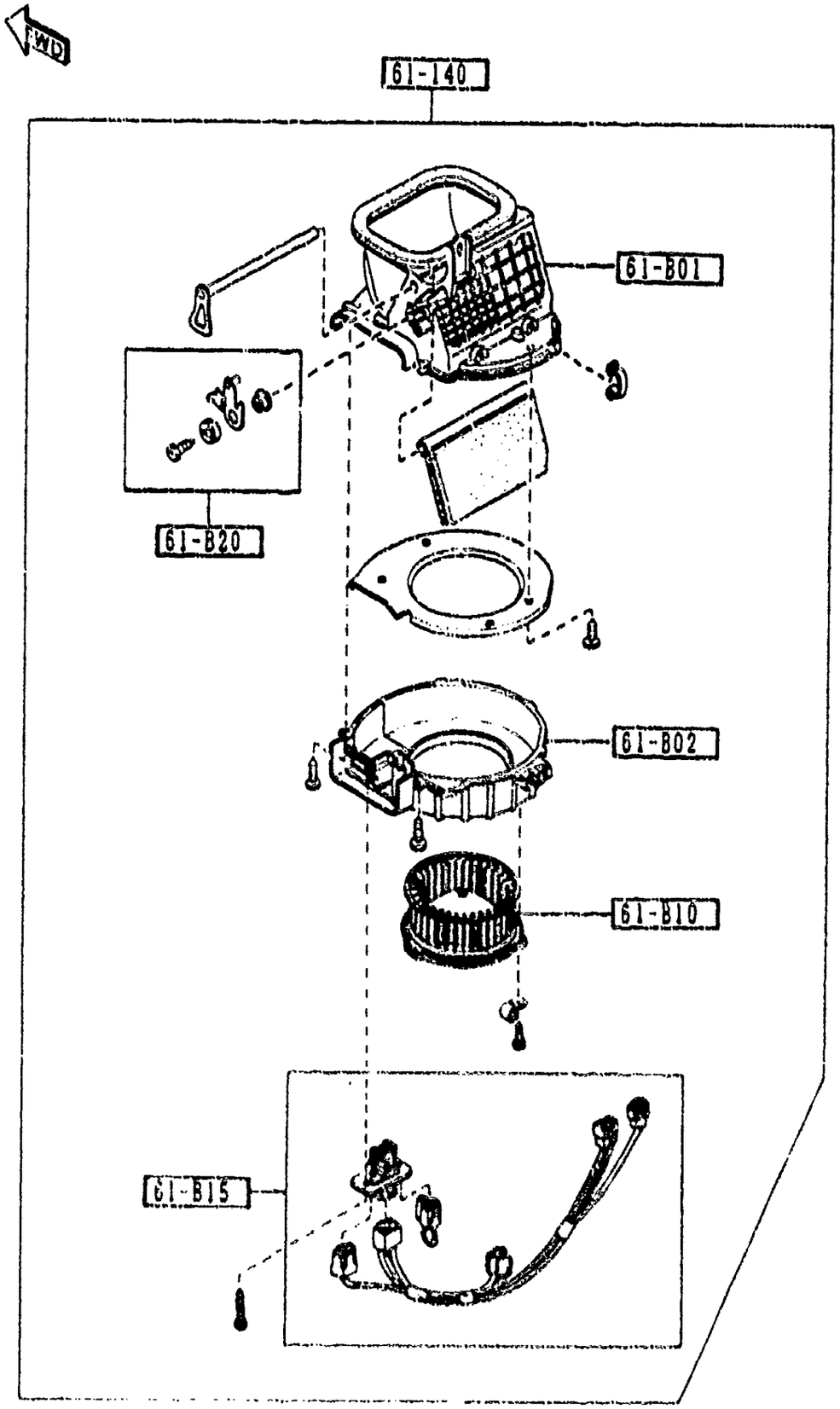

PART NO.	QTY	MODEL/RESTRICTION	MODEL/RESTRICTION	MODEL/RESTRICTION	FROM-TO
61-B01 NA75-61-B01	1	CASE'A',BLOWER UNIT			
61-B02 NA01-61-B02	1	CASE'B',BLOWER UNIT			
61-B10 NA01-61-B10	1	MOTOR,FAN-BLOWER UNIT			
61-B15 NA01-61-B15	1	RESISTOR,BLOWER UNIT			
61-B20 NA01-61-B20	1	LINK,RECYCLE & FRESH			
61-140 NA75-61-140	1	BLOWER UNIT			

(HOSE & CONDENSER)

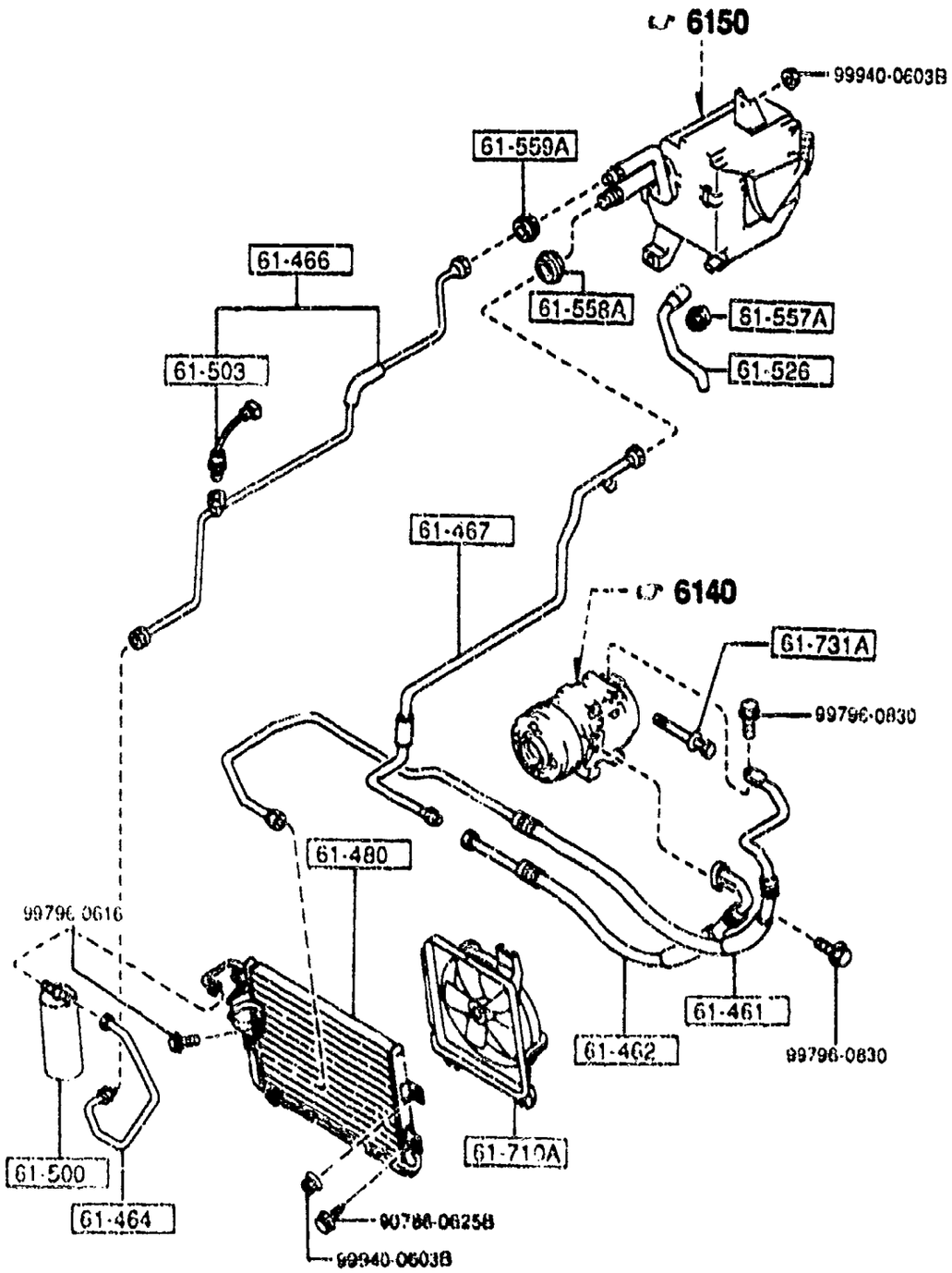

(BRACKET & CLIP)

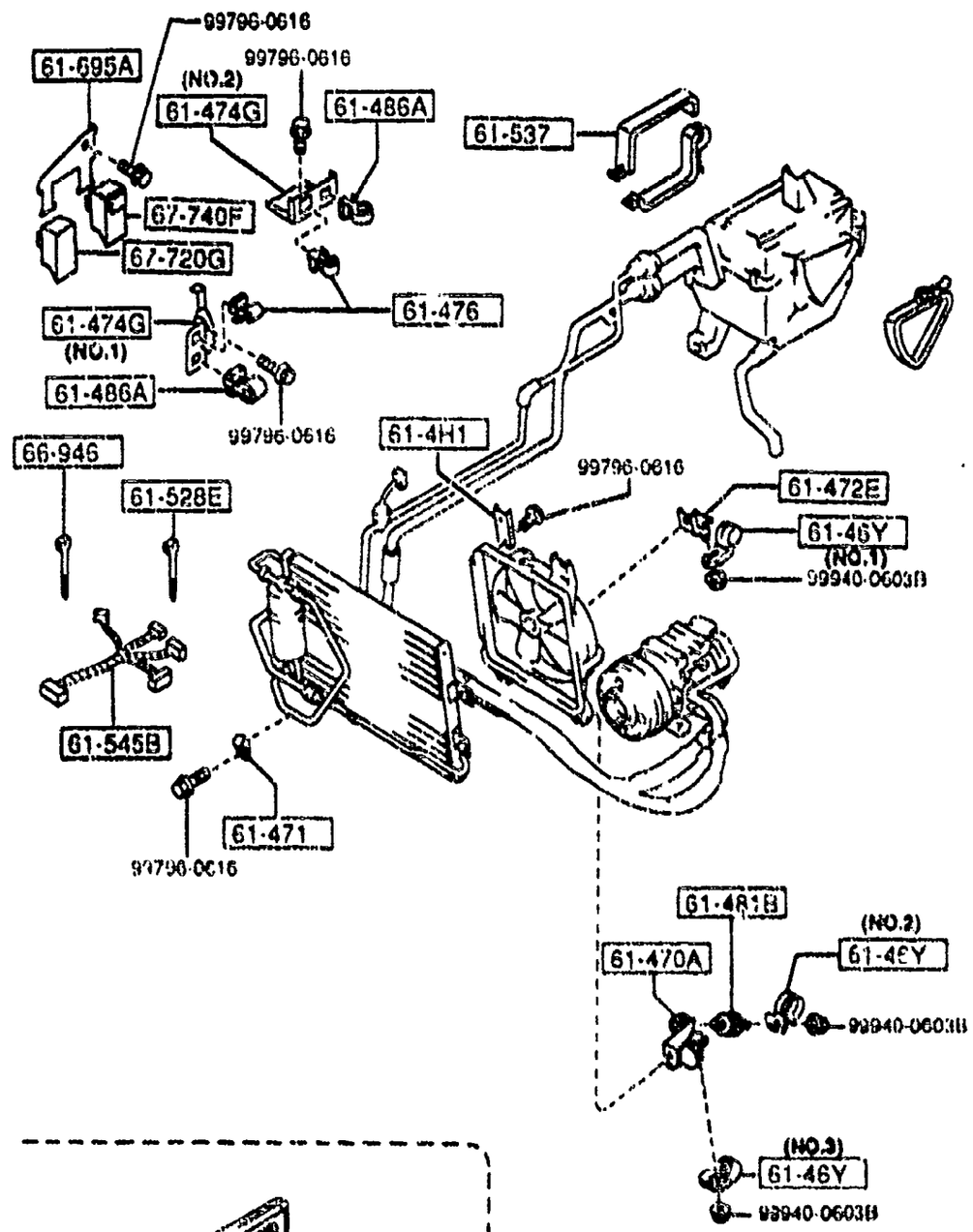

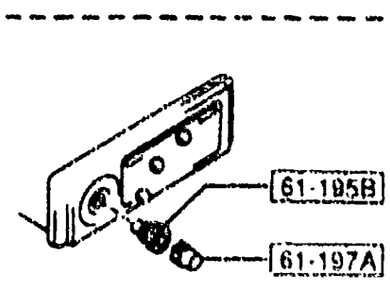

6130 AIR CONDITIONER (1/2)

(HOSE & CONDENSER)

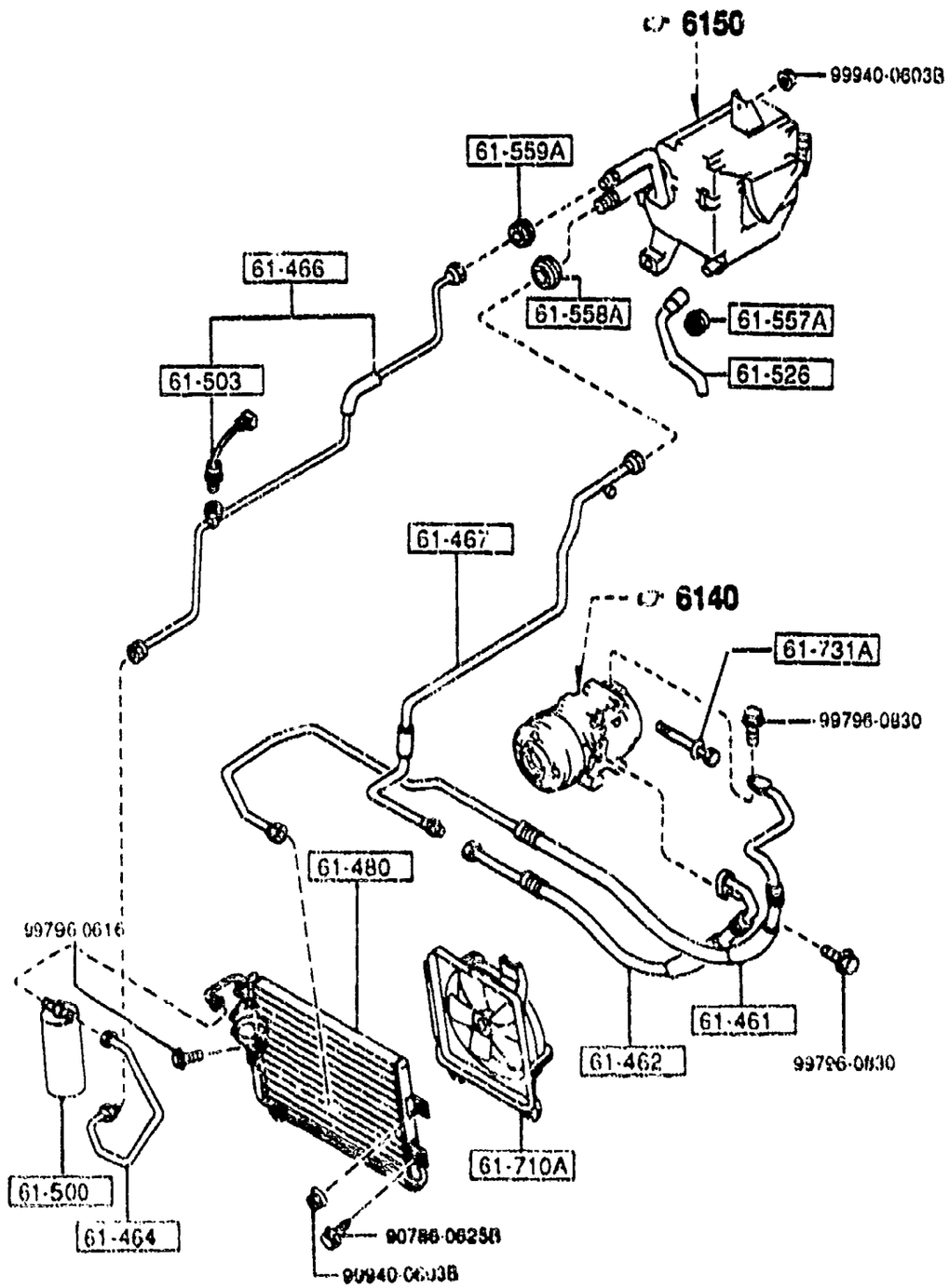

PART NO.	QTY	MODEL/RESTRICTION	MODEL/RESTRICTION	MODEL/RESTRICTION	FROM-TO
61-195R NA01-61-193	1	KNOB,FAN SWITCH			
61-197A NA01-61-197	1	KNOB,AIR CON.			
61-4H1 NA01-61-4H1	1	BRACKET,HOSE (A)			
61-46Y BR71-61-46Y	1	CLIP,PIPE (A) (ILLUST. NO.1)			
BR76-61-46Y	1	(A) (ILLUST. NO.2)			
NA01-61-46YC	1	(A) (ILLUST. NO.3)			
61-461 NA75-61-461	1	HOSE,FLEXIBLE-HIGH (A)			
61-462 NA75-61-462	1	HOSE,FLEXIBLE-LOW (A)			
61-464 NA75-61-467	1	PIPE NO.2,COOLER (A)			
61-466 NA75-61-46XA	1	PIPE NO.4,COOLER (A)			
61-467 NA75-61-468	1	PIPE NO.5,COOLER (A)			
61-470A NA02-61-471A	1	BRACKET,HOSE (A)			
61-471 BF67-61-471	1	CLIP,PIPE (A)			

(BRACKET & CLIP)

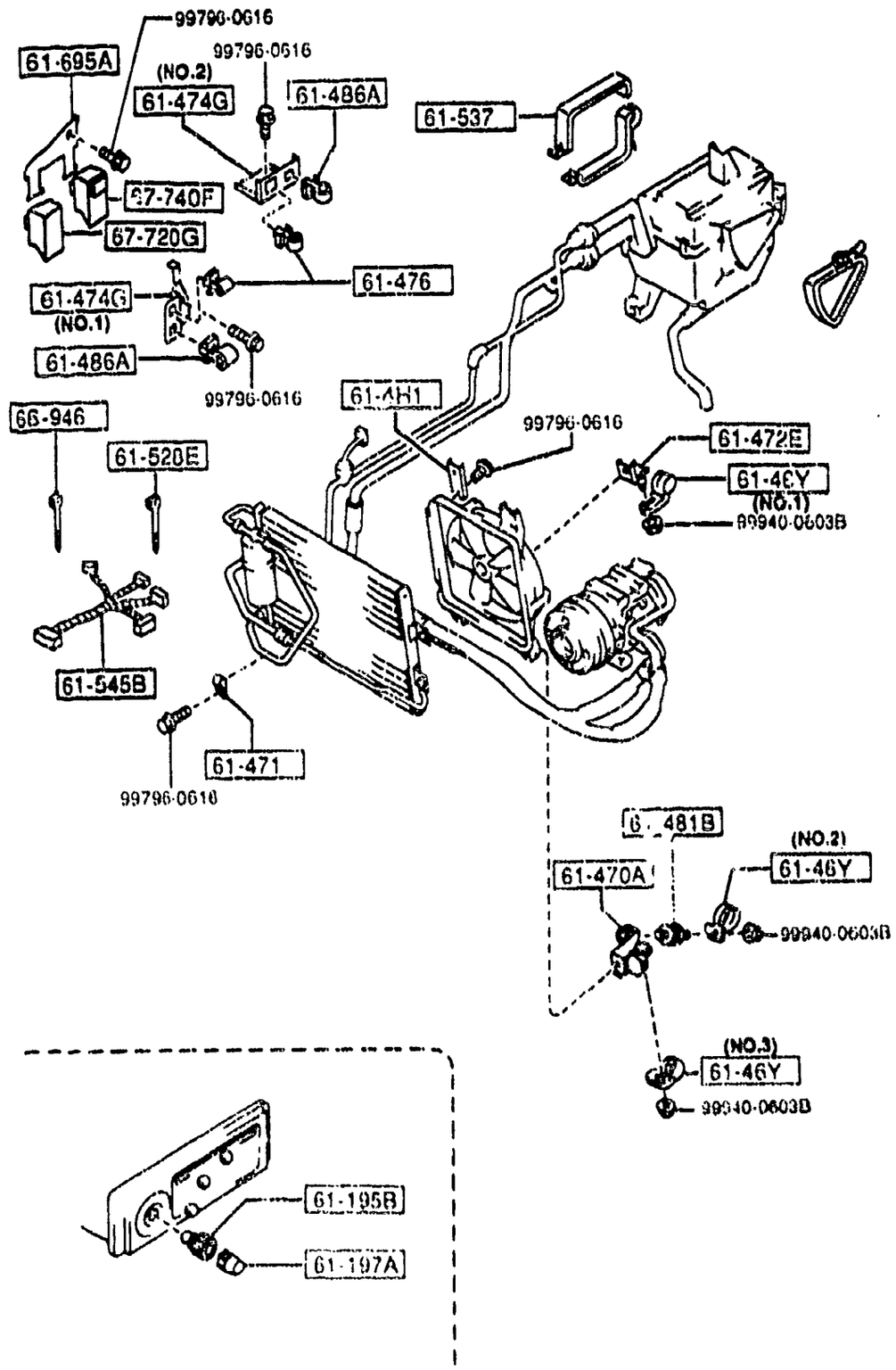

PART NO.	QTY	MODEL/RESTRICTION	MODEL/RESTRICTION	MODEL/RESTRICTION	FROM-TO
61-472E		BRACKET,CLAMP			
NA01-61-472	1	(A)			
61-474G		BRACKET,PIPE			
NA01-61-474	1	(A) (ILLUST. NO.1)			
NA02-61-474A	1	(A) (ILLUST. NO.2)			
61-476		CLIP			
NA02-61-476	2	(A)			
61-480		CONDENSER			
NA75-61-480	1	(A)			
61-481B		RUBBER,INSULATOR			
FC20-61-481	1	(A)			
61-486A		CLIP			
UB39-61-486A	2				
61-500		TANK,LIQUID			
NA75-61-500	1	(A)			
61-503		SW.,PRESSURE-LIQUID TANK			
GB6H-61-503	1	(G)			
61-526		HOSE,DRAIN			
NA01-61-526	1	(A)			
61-528E		BAND			
NA01-61-435	1	(G)			
61-537		PLATE NO.3,SEAL			
NA01-61-529	1	(A)			

6130 AIR CONDITIONER (1/2)

(HOSE & CONDENSER)

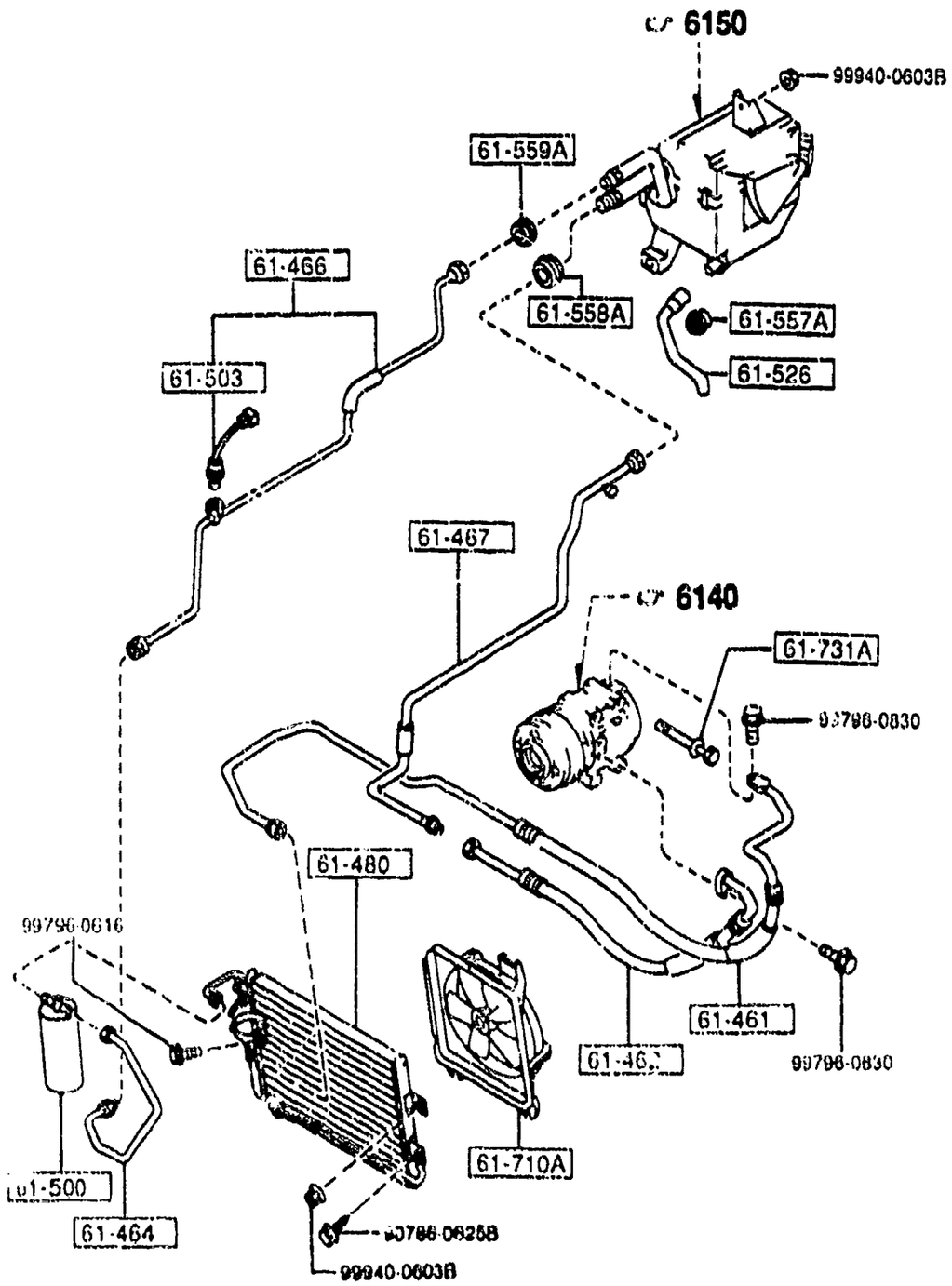

PART NO.	QTY	MODEL/RESTRICTION	MODEL/RESTRICTION	MODEL/RESTRICTION	FROM-TO
61-545B NA75-61-545A	1	HARNESS,WIRE (A)			
61-557A FB04-61-557	1	GROMMET (A)			
61-558A BF67-61-558	1	GROMMET (A)			
61-559A BF67-61-559	1	GROMMET (A)			
61-695A NA75-61-695	1	BRACKET,RELAY (A)			
61-710A NA01-61-710	1	FAN,CONDENSER (A)			
61-731A B111-61-731	4	BOLT,AIR CON.			
66-946 NA02-61-435	1	BAND (A)			
67-720G EF12-67-720	1	RELAY,TRANSFER			
67-740F H450-67-740	1	CONTROL,COOLANT FAN			

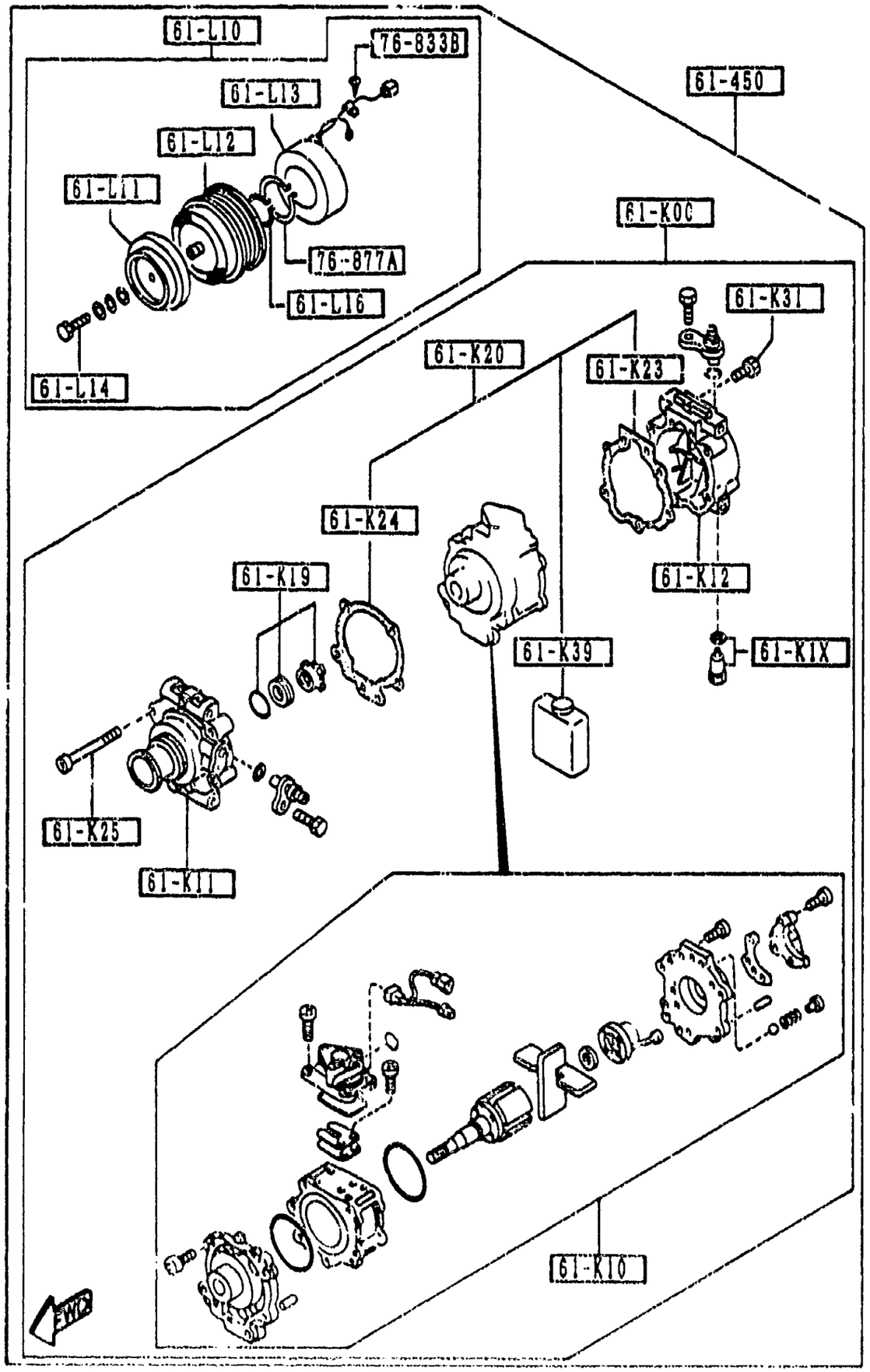

PART NO.	QTY	MODEL/RESTRICTION	MODEL/RESTRICTION	MODEL/RESTRICTION	FROM-TO
61-K00 NA75-61-K00	1	COMPRESSOR,AIR CON. (A)			
61-K1X NA75-61-K1X	1	VALVE,RELIEF (A)			
61-K10 NA75-61-K10	1	SHAFT,CYL -COMPRESSO R (A)			
61-K11 NA75-61-K11	1	HEAD,CYL.-COMPRESSOR (A)			
61-K12 NA75-61-K12	1	HEAD,CYL.-COMPRESSOR (A)			
61-K19 NA75-61-K19	1	SEAL,SHAFT-COMPR. (A)			
61-K20 NA75-61-K2X	1	GASKET KIT,COMPRESSO R (A)			
61-K23 NA75-61-X23	1	PLUG,COMPRESSOR			
61-K24 NA02-61-K24	1	GASKET,COMPRESSOR (A)			
61-K25 F065-61-K25	5	BOLT,COMPRESSOR-AIR CON.			
61-K31 F065-61-K31	2	BOLT,COMPRESSOR			
61-K39 NA75-71-K39	1	OIL,COMPRESSOR			

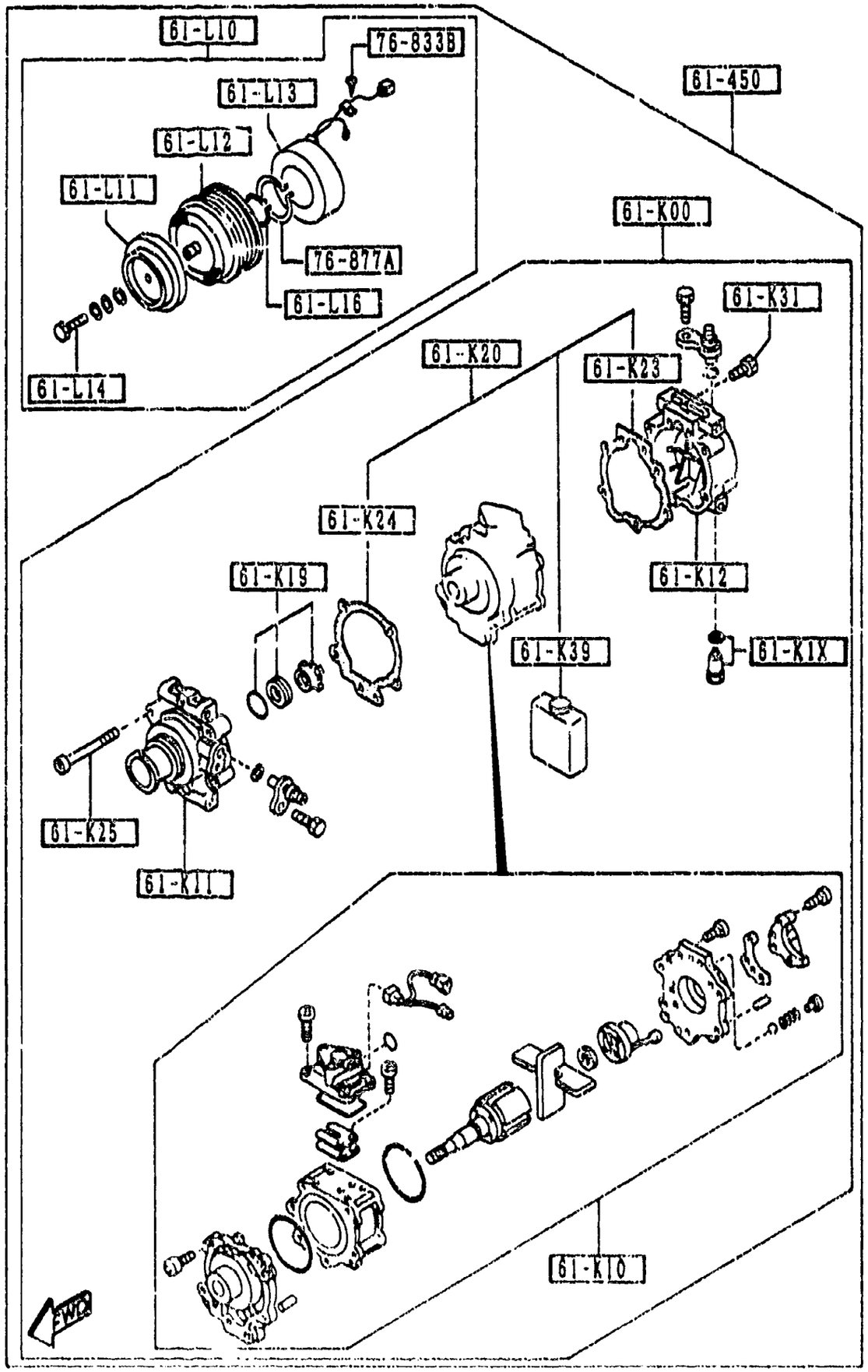

PART NO.	QTY	MODEL/RESTRICTION	MODEL/RESTRICTION	MODEL/RESTRICTION	FROM-TO
61-L10		CLUTCH,MAGNET			
NA75-61-L10	1	(A)			
61-L11		ARMATURE,MAGNETIC CLUTCH			
NA75-61-L11	1	(A)			
61-L12		PULLEY,MAGNET CLUTCH			
NA75-61-L12	1	(A)			
61-L13		COIL,FIELD-MAGNET CLUTCH			
NA75-61-L13	1	(A)			
61-L14		BOLT,MAGNET CLUTCH			
F065-61-L14	1				
61-L16		RING,SNAP-MAGNET CLUTCH			
F065-61-L16	1				
61-450		COMPRESSOR			
NA75-61-450	1	(A)			
76-833B		WASHER			
B001-76-734	1				
76-877A		RING,SNAP			
B001-76-725	1				

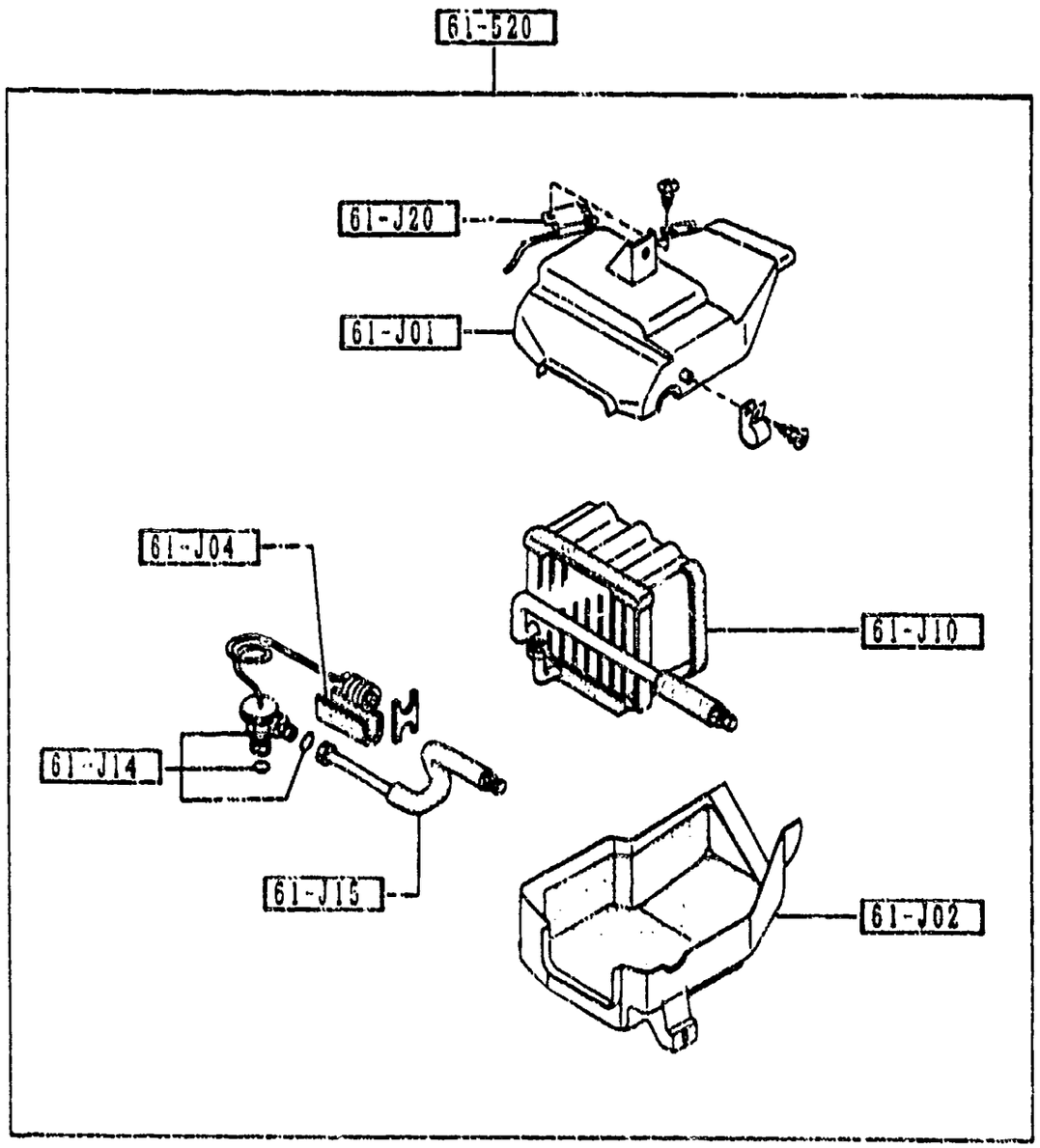

6150 -1 * COOLING UNIT (AIR CONDITIONER)

PART NO.	QTY	MODEL/RESTRICTION	MODEL/RESTRICTION	MODEL/RESTRICTION	FROM-TO
61-J01 NA01-61-J01A	1	CASE'A',COOLING UNIT (A)			
61-J02 NA01-61-J02A	1	CASE'B',COOLING UNIT (A)			
61-J04 NA01-61-J04	1	SEAL,COOLING UNIT (A)			
61-J10 NA01-61-J10A	1	EVAPORATOR (A)			
61-J14 NA75-61-J14	1	VALVE,EXPANSION (A)			
61-J15 NA01-61-J15	1	PIPE,COOLING UNIT (A)			
61-J20 NA01-61-J20	1	THERMOSTAT,COOLING U NIT (A)			
61-520 NA75-61-520B	1	UNIT,COOLING (A)			

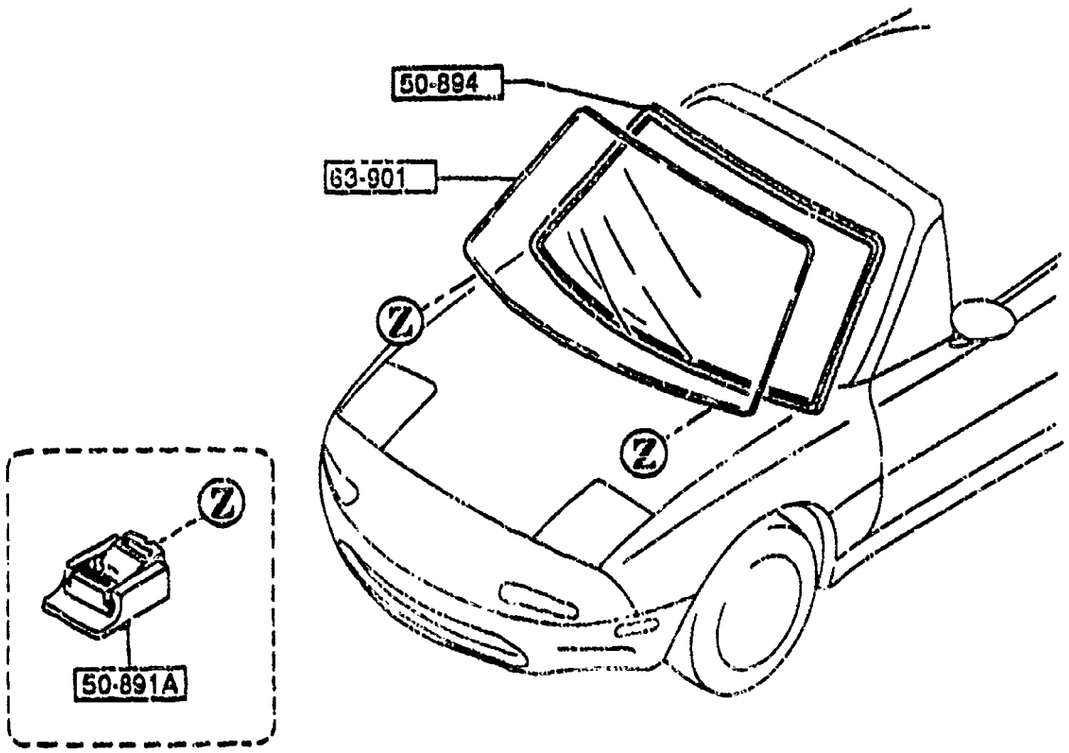

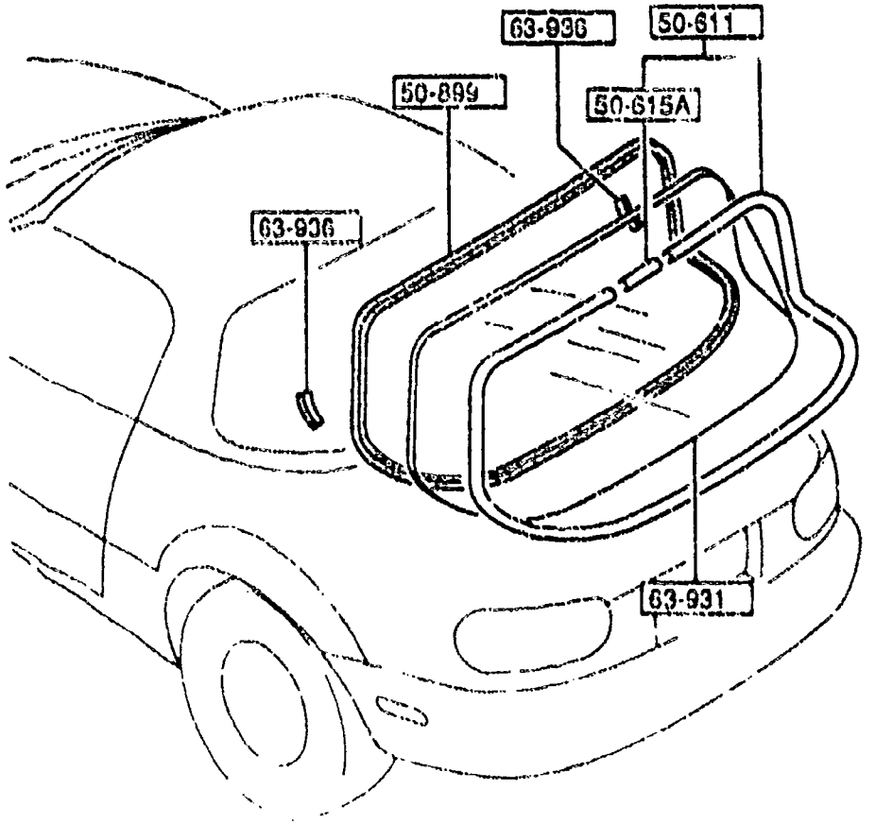

PART NO.	QTY	MODEL/RESTRICTION	MODEL/RESTRICTION	MODEL/RESTRICTION	FROM-TO
50-611		MOULD,RR.WINDOW			
NAY1-63-930	1	(W/DETACHABLE HARD TOP)			
50-615A		JOINT,BACK WINDOW MOULD			
NA01-63-934	1	(W/DETACHABLE HARD TOP)			
50-891A		SPACER,WINDOW			
EA01-50-891		WHITE			
AN(EA01-50-891A)	2				-4401
EA01-50-891A	2	WHITE			4401-
50-894		DAM,FRONT-WIND.			
NA01-50-894A	1				
50-899		DAM,REAR-WIND.			
NA01-63-895	1	(W/DETACHABLE HARD TOP)			
63-901		GLASS,WINDSHIELD			
NA01-63-901	1				
63-931		GLASS,BACK WINDOW			
N007-63-931	1	(W/DETACHABLE HARD TOP)			
63-936		PROTR,BACK WINDOW-UPPER			
NA01-63-936A	2	(W/DETACHABLE HARD TOP)			-4301

4301 NA3***-514472
4401 NA3***-517818

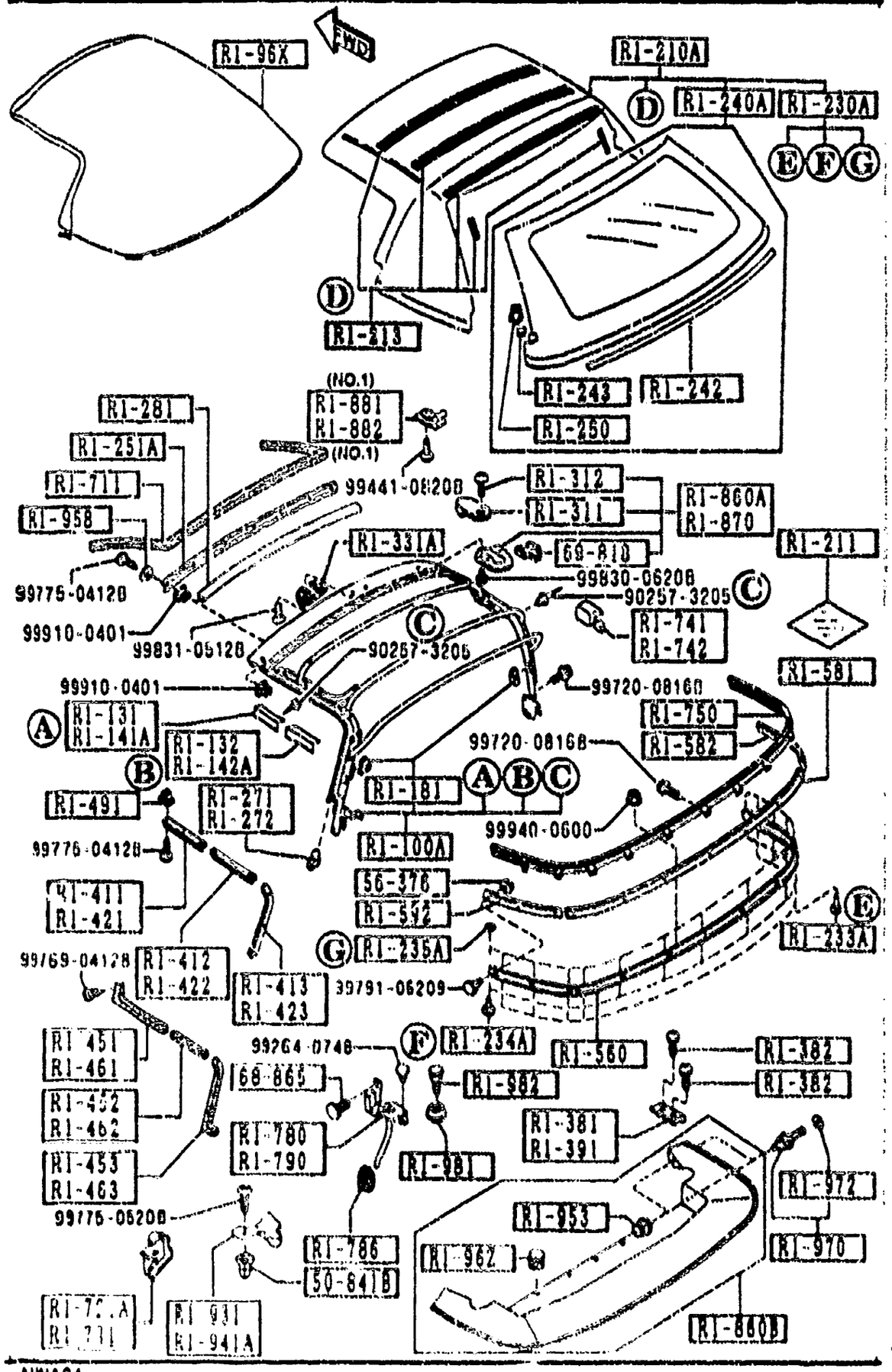

(W/DETACHABLE HARDTOP)

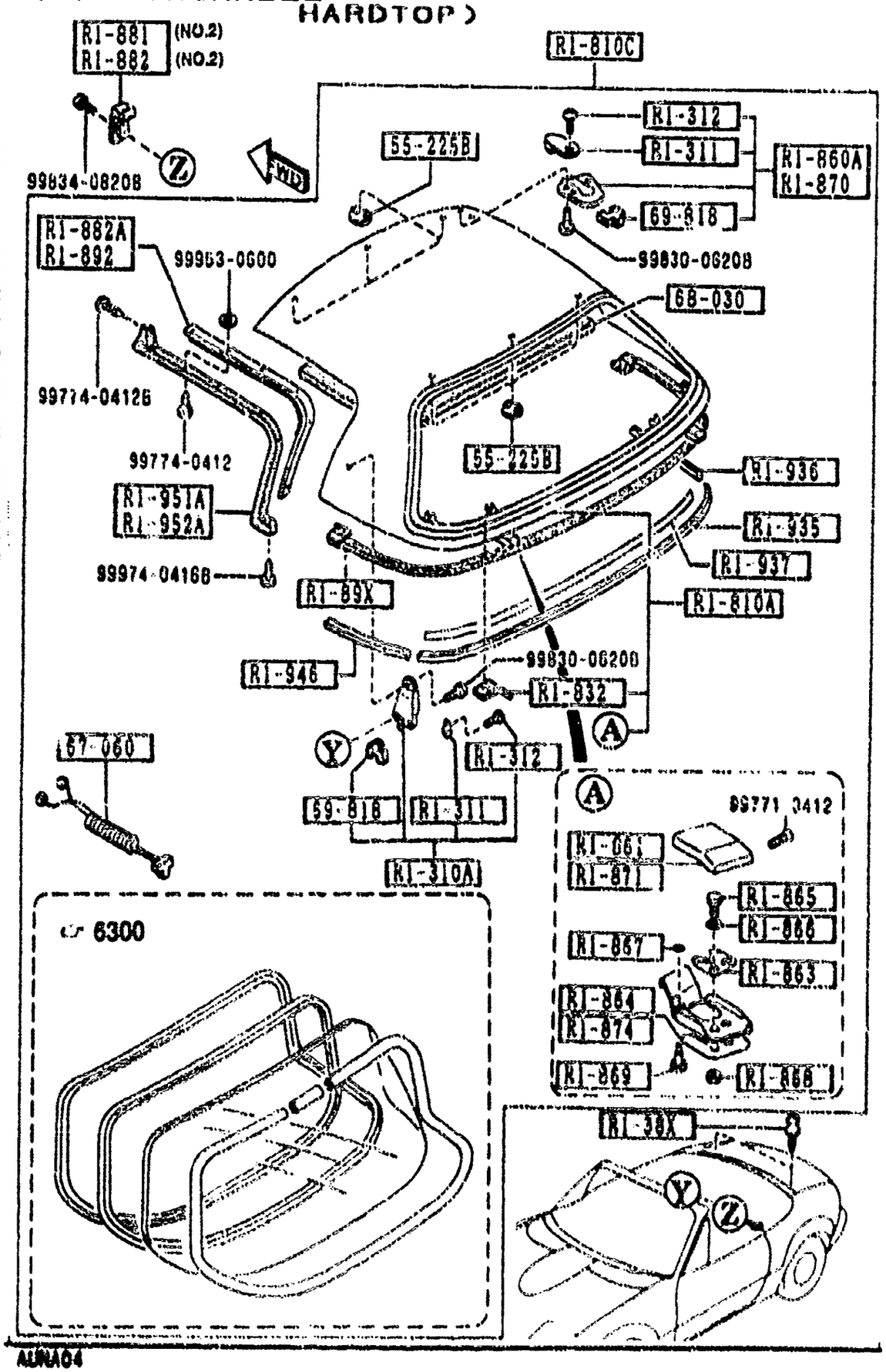

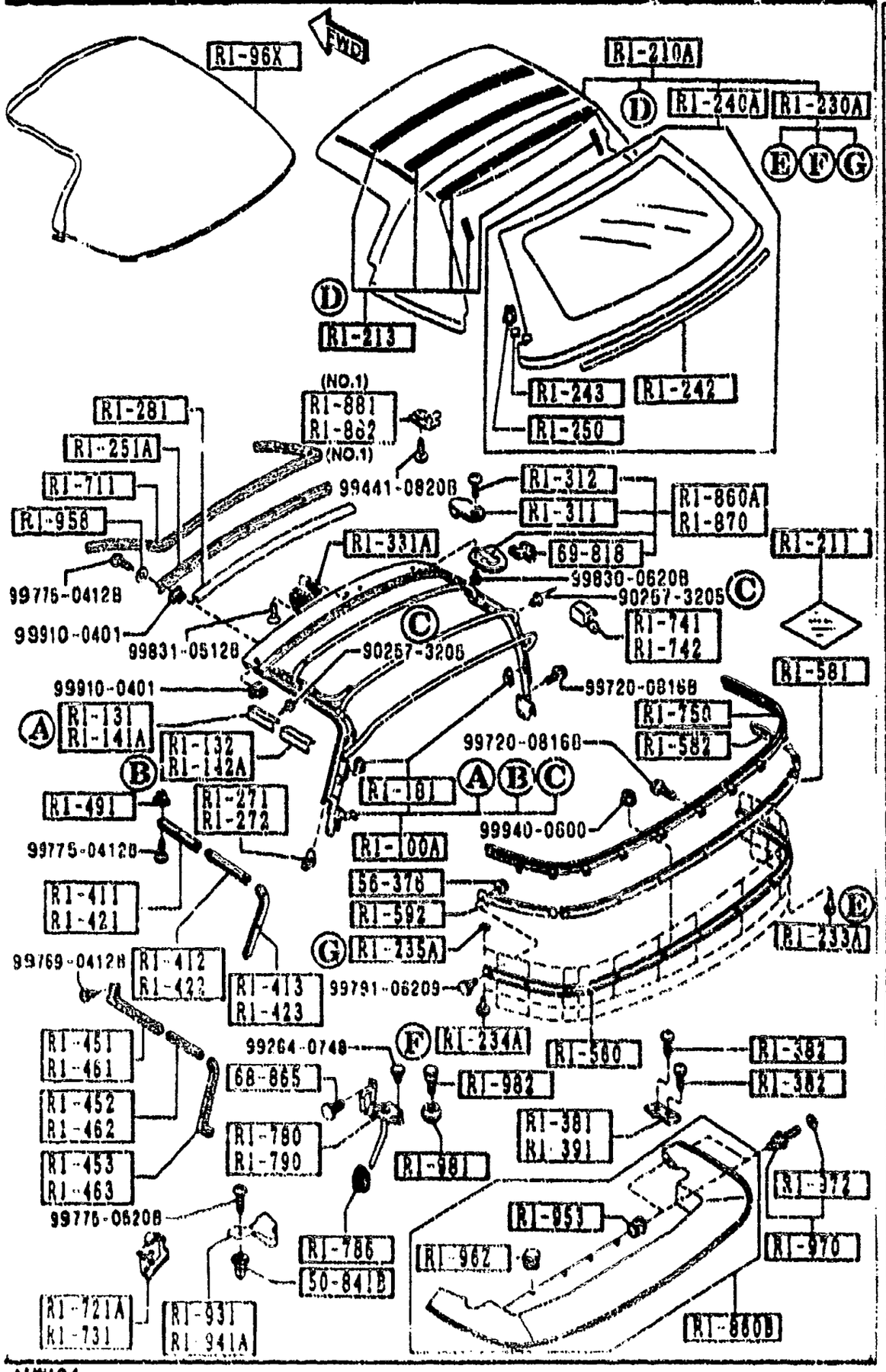

ALMA04

PART NO.	QTY	MODEL/RESTRICTION	MODEL/RESTRICTION	MODEL/RESTRICTION	FROM-TO
R1-100A NA01-R1-100E	1	LINK,SOFT TOP			
R1-131 NA01-R1-131	1	PROTECTOR'A'(R),LINK			
R1-132 NA01-R1-132	1	PROTECTOR'B'(R),LINK			
R1-141A NA01-R1-141	1	PROTECTOR'A'(L),LINK			
R1-142A NA01-R1-142	1	PROTECTOR'B'(L),LINK			
R1-181 NA01-R1-181	2	STOPPER,LINK-HOOD			
R1-210A NA01-R1-210H AN(NA01-R1-210J)	1	FABRIC,TOP-SOFT TOP			-3A01
NA02-R1-210B AN(NA02-R1-210C)	1				-3A01
NA01-R1-210J	1	BASE, PKG-A, PKG-B, PKG-R, (BLACK)			3A01-
NA02-R1-210C	1	PKG-C, (TAN)			3A01-
R1-211 NAV1-R1-211	1	CLOTH,REPAIR-TOP BASE, PKG-A, PKG-B, PKG-R, (BLACK)			
NAV2-R1-211	1	PKG-C, (TAN)			
R1-213 NA02-R1-213	1	CLOTH'C',TOP PKG-C, (TAN)			
R1-230A NA01-R1-230	1	FASTENER SET,TOP CLOTH			

3A01 NA3###-505179

CAT. AUMA04-03

1989-04

6330 SUNROOF (2/2)

(W/DETACHABLE HARDTOP)

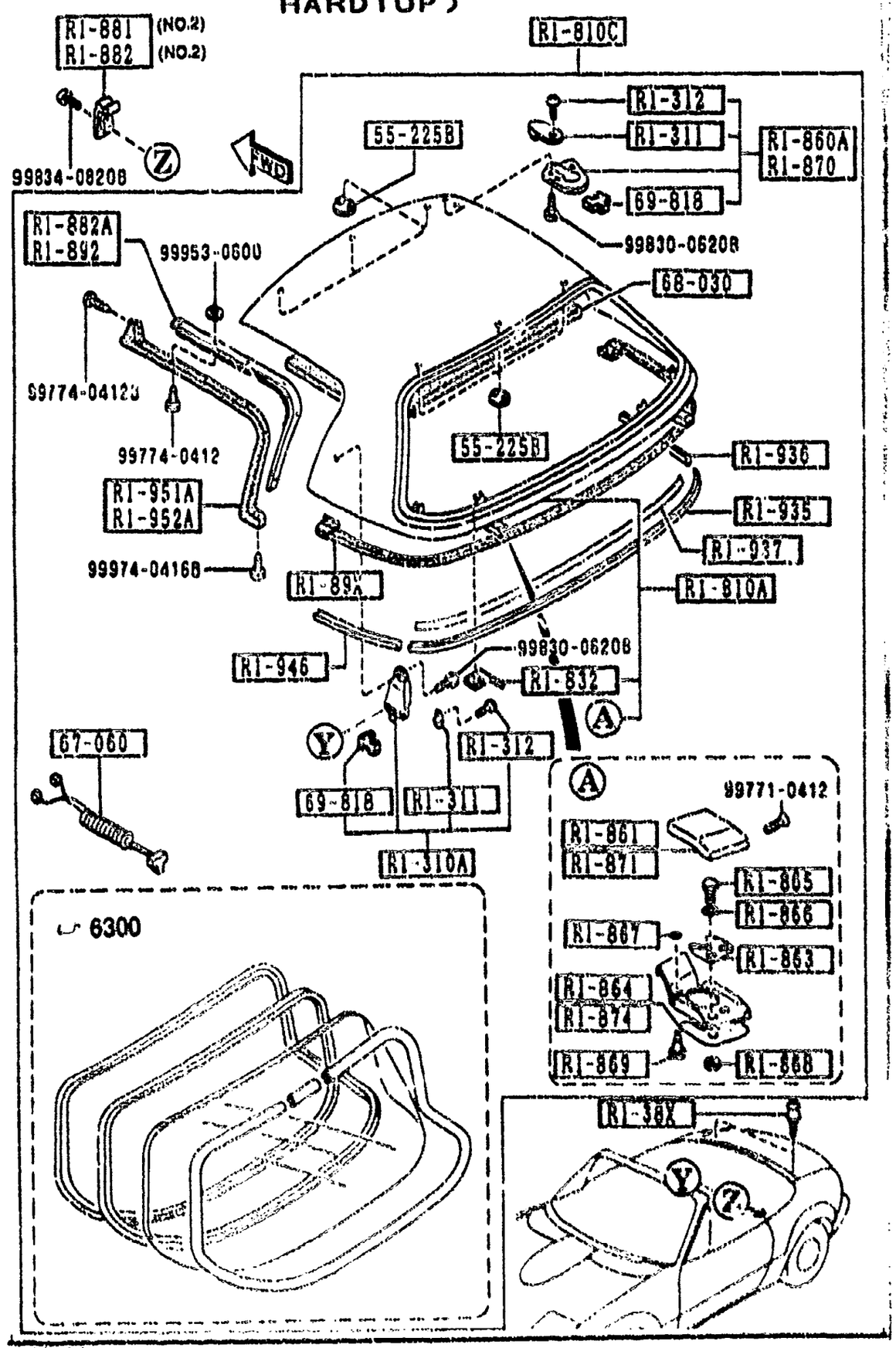

PART NO.	QTY	MODEL/RESTRICTION	MODEL/RESTRICTION	MODEL/RESTRICTION	FROM-TO
R1-233A NA01-R1-233	8	FASTENER,RAIN RAIL-SIDE			
R1-234A NA01-R1-234	7	FASTENER,RAIN RAIL-REAR			
R1-235A NA01-R1-235	15	WASHER,FASTENER-RAIN RAIL			
R1-240A NAY1-R1-240E AN(NAY1-R1-240F)	1	WINDOW,BACK-D. TOP BLACK			-3C15
NAY2-R1-240B AN(NAY2-R1-240C)	1	TAN			-3C15
NAY1-R1-240F	1	BASE, PKG-A, PKG-B, PKG-R, (BLACK)			3C15-
NAY2-R1-240C	1	PKG-C, (TAN)			3C15-
R1-242 NAY1-R1-242	1	TAPE,SEAL-RAIN RAIL			
R1-243 NAY1-R1-243	2	STOPPER,ZIPPER-BACK WINDOW			
R1-250 NA01-R1-250B	1	HEAD,ZIPPER-BACK WINDOW			
R1-251A NA01-R1-251	1	PLATE(FRT),SET-ROOF PANEL			
R1-271 NA01-R1-271	1	CLIP(R),FORM PLATE			
R1-272 NA01-R1-272	1	CLIP(L),FORM PLATE			
R1-281 NA01-R1-281	1	BELT,SEAMING-SOFT TOP			
R1-310A		LOCK,DETACHABLE TOP			

3C15 NA3***-508712

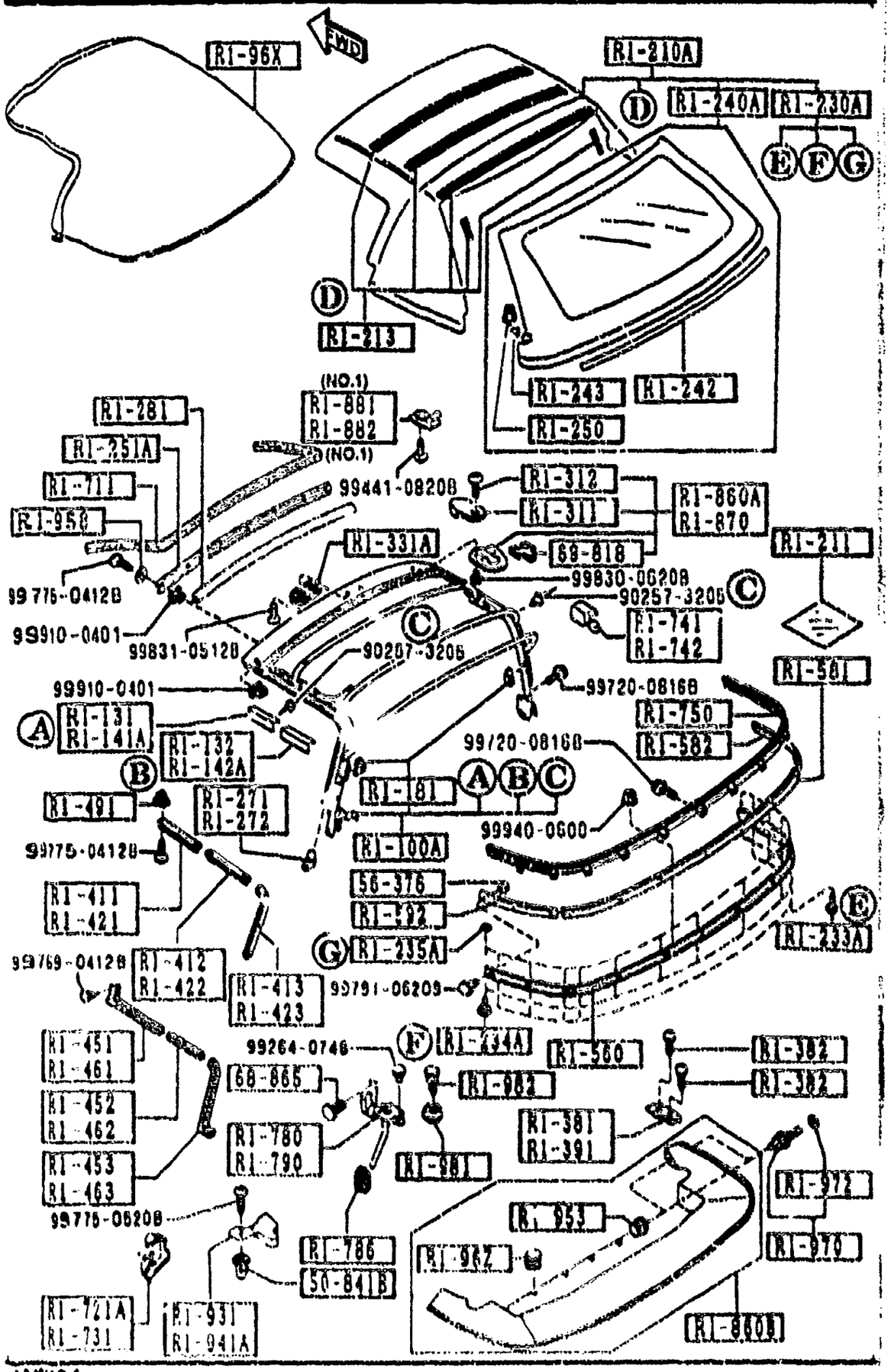

ALMA04

PART NO.	QTY	MODEL/RESTRICTION	MODEL/RESTRICTION	MODEL/RESTRICTION	FROM-TO
CONT'D NA02-R1-310B AN(NAU2-R1-310C)	2				-4201
NA02-R1-310C	2	(W/DETACHABLE HARD TOP)			4201-
R1-311		CAP,TOP LOCK			
NA01-R1-311	2	(W/O DETACHABLE HARD TOP)			
NA01-R1-311	6	(W/DETACHABLE HARD TOP)			
R1-312		SCREW,TOP LOCK			
NA01-R1-312	2	(W/O DETACHABLE HARD TOP)			
NA01-R1-312	6	(W/DETACHABLE HARD TOP)			
R1-331A		HANDLE,SOFT TOP			
NA01-R1-331	1				
R1-38X		HOOK,SOFT TOP-REAR DECK			
NA01-R1-38XB	2				
R1-381		PLATE(R),HOOK-REAR DECK			
NA01-R1-381B	1				
R1-382		SCREW,HOOK-REAR DECK			
NA01-R1-382A	2				
R1-391		PLATE(L),HOOK-REAR DECK			
NA01-R1-391B	1				
R1-411		RETAINER'A'(R),WTHSTP			
NA01-R1-461	1				
R1-412		RETAINER'B'(R),WTHSTP			
NA01-R1-462	1				
R1-413		RETAINER'C'(R),WTHSTP			
NA01-R1-463	1				
R1-421		RETAINER'A'(L),WTHSTP			
NA01-R1-471	1				

4201 NA3*NB-511601

6330 SUNROOF (2/2)

(W/DETACHABLE HARDTOP)

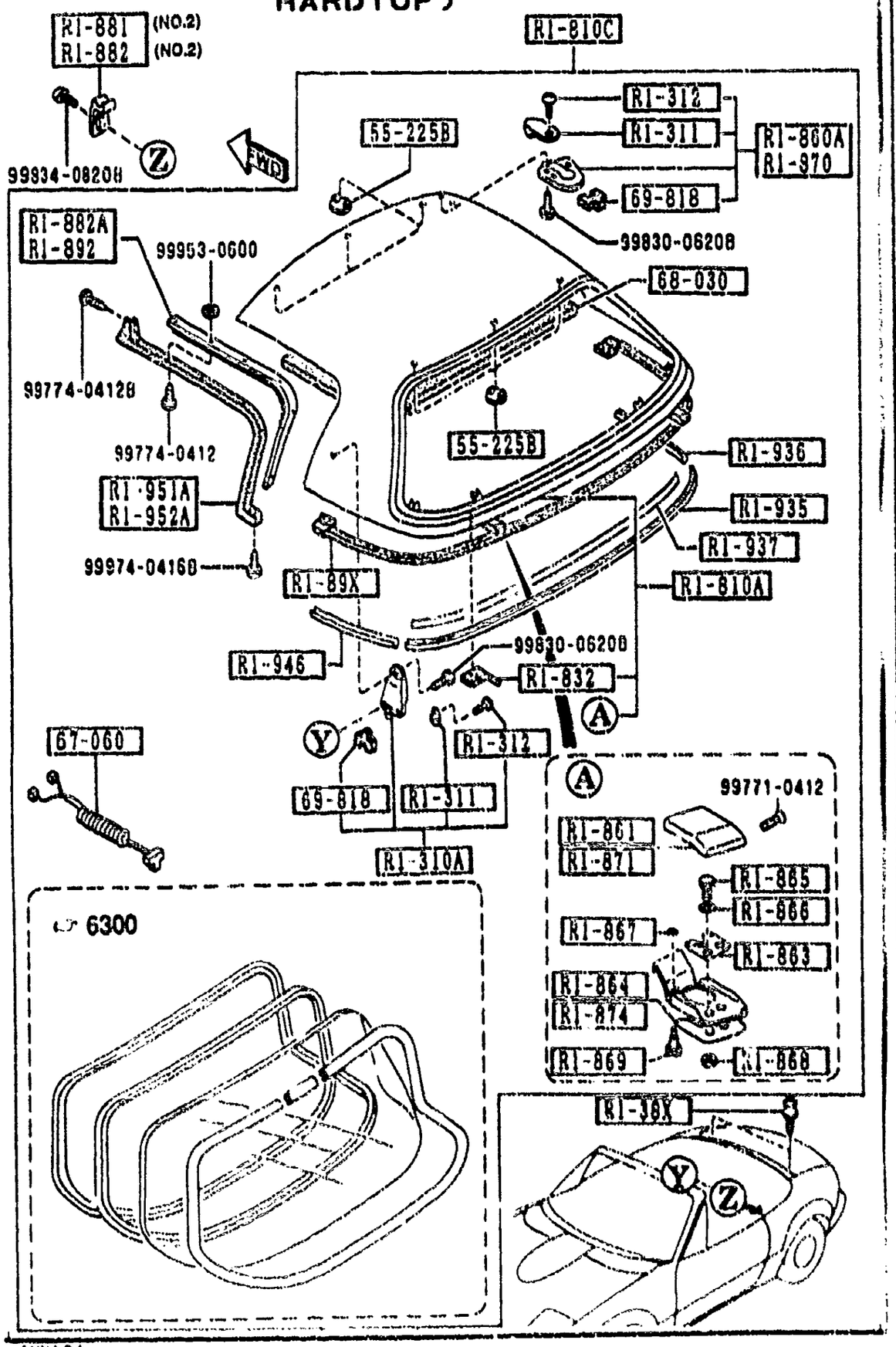

PART NO.	QTY	MODEL/RESTRICTION	MODEL/RESTRICTION	MODEL/RESTRICTION	FROM-TO
R1-422 NA01-R1-472	1	RETAINER'B'(L),WTHSTP			
R1-423 NA01-R1-473	1	RETAINER'C'(L),WTHSTP			
R1-451 NA01-R1-411B	1	WTHSTP NO.1(R),LINK			
R1-452 NA01-R1-412B	1	WTHSTP NO.2(R),LINK			
R1-453 NA01-R1-413B	1	WTHSTP NO.3(R),LINK			
R1-461 NA01-R1-421B	1	WTHSTP NO.1(L),LINK			
R1-462 NA01-R1-422B	1	WTHSTP NO.2(L),LINK			
R1-463 NA01-R1-423B	1	WTHSTP NO.3(L),LINK			
R1-491 NA01-R1-491	16	GROMMET,SCREW-RETAINER			
R1-560 NA01-R1-560C	1	NAIL,RAIN-SOFT TOP REAR			
R1-581 NA01-R1-581B	1	PLATE(C),SET-TOP FABRIC			
R1-582 NA01-R1-582A	1	PLATE(R),SET-TOP FABRIC			
R1-592 NA01-R1-592A	1	PLATE(L),SET-TOP FABRIC			
R1-711 NA01-R1-711B	1	WTHSTP,FRONT HEADER			

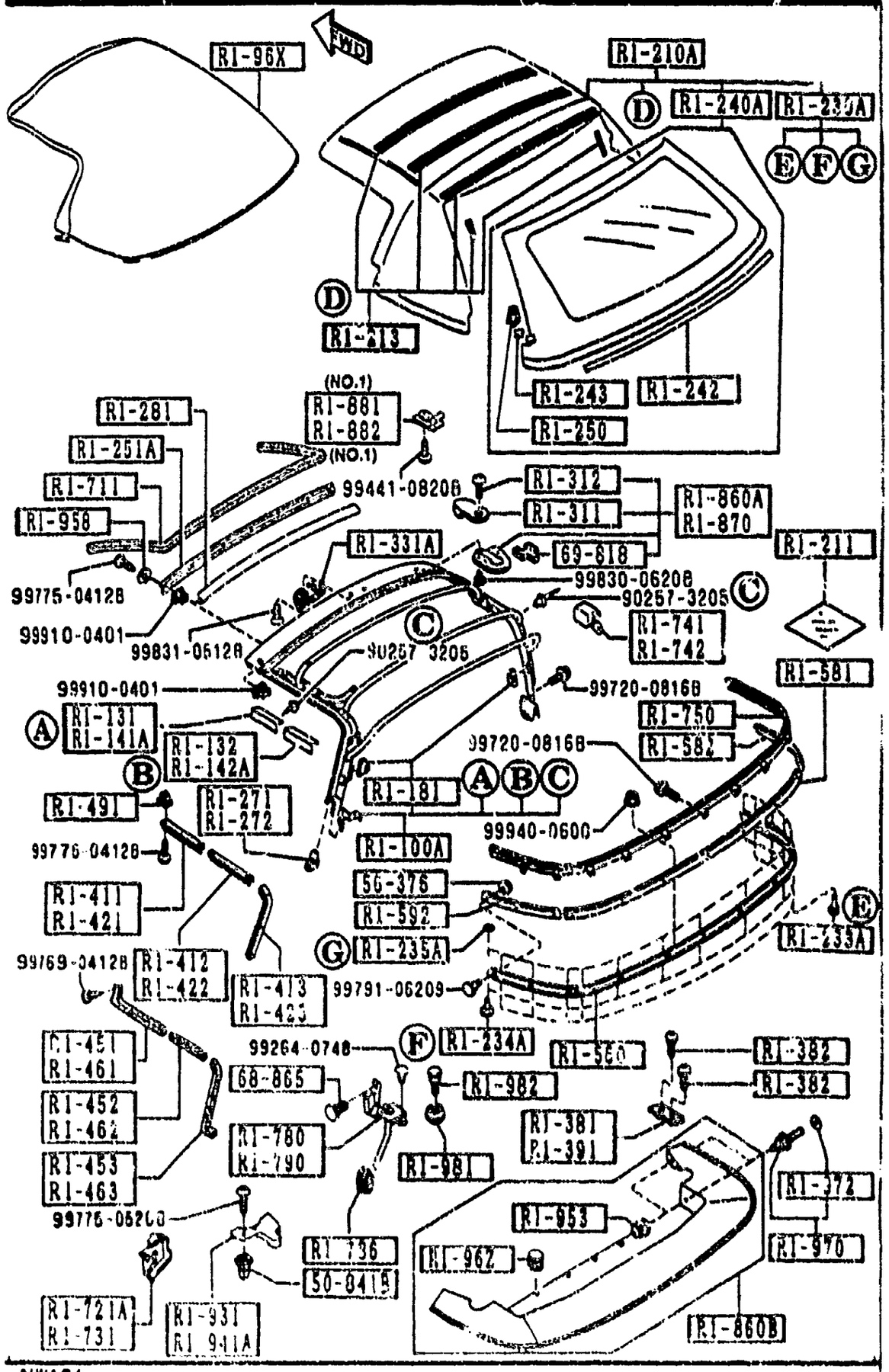

PART NO.	QTY	MODEL/RESTRICTION	MODEL/RESTRICTION	MODEL/RESTRICTION	FROM-TO
R1-721A		WTHSTP(R),CAB SIDE			
NA01-R1-721B	1				
R1-731		WTHSTP(L),CAB SIDE			
NA01-R1-731B	1				
R1-741		PROTR(R),MOULD-BELT LINE			
NA01-R1-741B	1				
R1-742		PROTR(L),MOULD-BELT LINE			
NA01-R1-742B	1				
R1-750		MOULD,BELTLINE-REAR			
NA01-R1-750D AN(NA01-R1-750E)	1				-4703
*NA01-R1-750E	1				4703-
R1-780		COVER(R),DRAIN-SOFT TOP			
NA01-R1-780C	1				
R1-786		GROMMET,DRAIN HOSE-TOP			
NA01-R1-786A	2				
R1-790		COVER(L),DRAIN-SOFT TOP			
NA01-R1-790C	1				
R1-810A		PANEL,ROOF			
NA06-R1-82X	1	(W/DETACHABLE HARD TOP)			
M8	EXT-	M8 MONTEGO BLUE M			
PT	EXT-	PT CHAST WHITE			
PZ	EXT-	PZ BRILLIANT BLACK			
SU	EXT-	SU CLASSIC RED			
6W	EXT-	6W LAGUNA BLUE M.			
R1-810C		ROOF,DETACHABLE TOP			
N007-R1-810A	1	(W/DETACHABLE HARD TOP)			
M8	EXT-	M8 MONTEGO BLUE M			
PT	EXT-	PT CHAST WHITE			

4703 NA3***-521342

6330 SUNROOF (2/2)
(W/DETACHABLE HARDTOP)

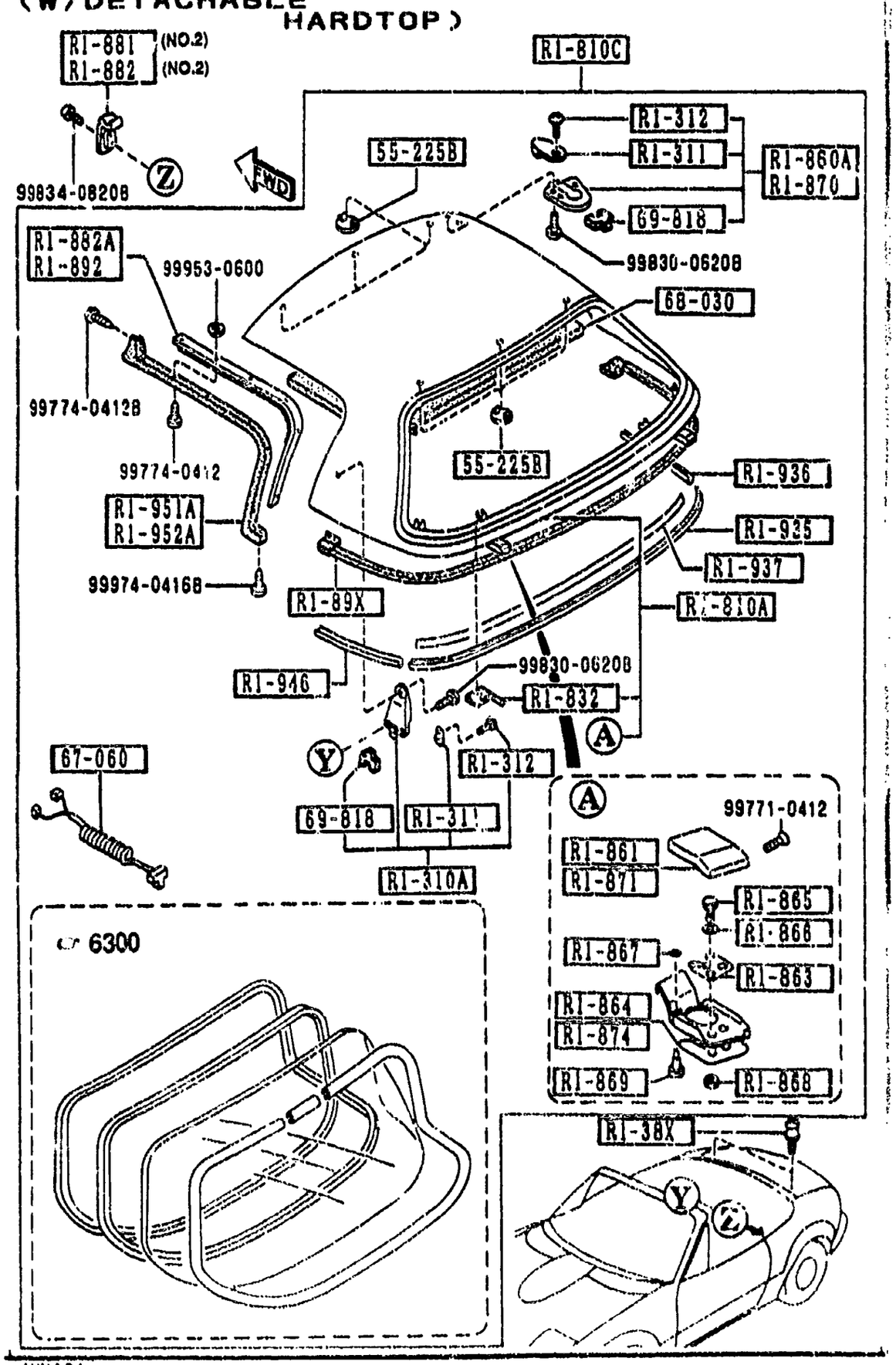

AUNA04

PART NO.	QTY	MODEL/RESTRICTION	MODEL/RESTRICTION	MODEL/RESTRICTION	FROM-TO
CONT'D					
PZ	EXT-	PZ BRILLIANT BLACK			
SU	EXT-	SU CLASSIC RED			
6W	EXT-	6W LAGUNA BLUE M.			
R1-832		PLATE,CUSHION-D. TOP			
NA01-R1-832A	2	(W/DETACHABLE HARD TOP)			
R1-860A		LOCK(R),TOP			
NA01-R1-310B AN(NA01-R1-310C)	1				-4201
NA01-R1-310B AN(NA01-R1-310C)	2				-4201
NA01-R1-310C	1	(W/O DETACHABLE HARD TOP)			4201-
NA01-R1-310C	2	(W/DETACHABLE HARD TOP)			4201-
R1-860B		BOOT,TOP			
NA01-R1-960E	1				
66	INT-	NA3 BLACK			
88	INT-	NA4 NA5 TAN			
R1-861		COVER(R),DECK LOCK			
NA01-R1-861	1	(W/DETACHABLE HARD TOP)			
R1-863		PLATE,DECK LOCK			
NA01-R1-863	2	(W/DETACHABLE HARD TOP)			
R1-864		SHEET(M),DECK LOCK			
NA01-R1-864	1	(W/DETACHABLE HARD TOP)			
R1-865		BOLT,DECK LOCK			
NA01-R1-865	4	(W/DETACHABLE HARD TOP)			
R1-866		WASHER'A',DECK LOCK			
NA01-R1-866	4	(W/DETACHABLE HARD TOP)			

4201 NA3***-511601

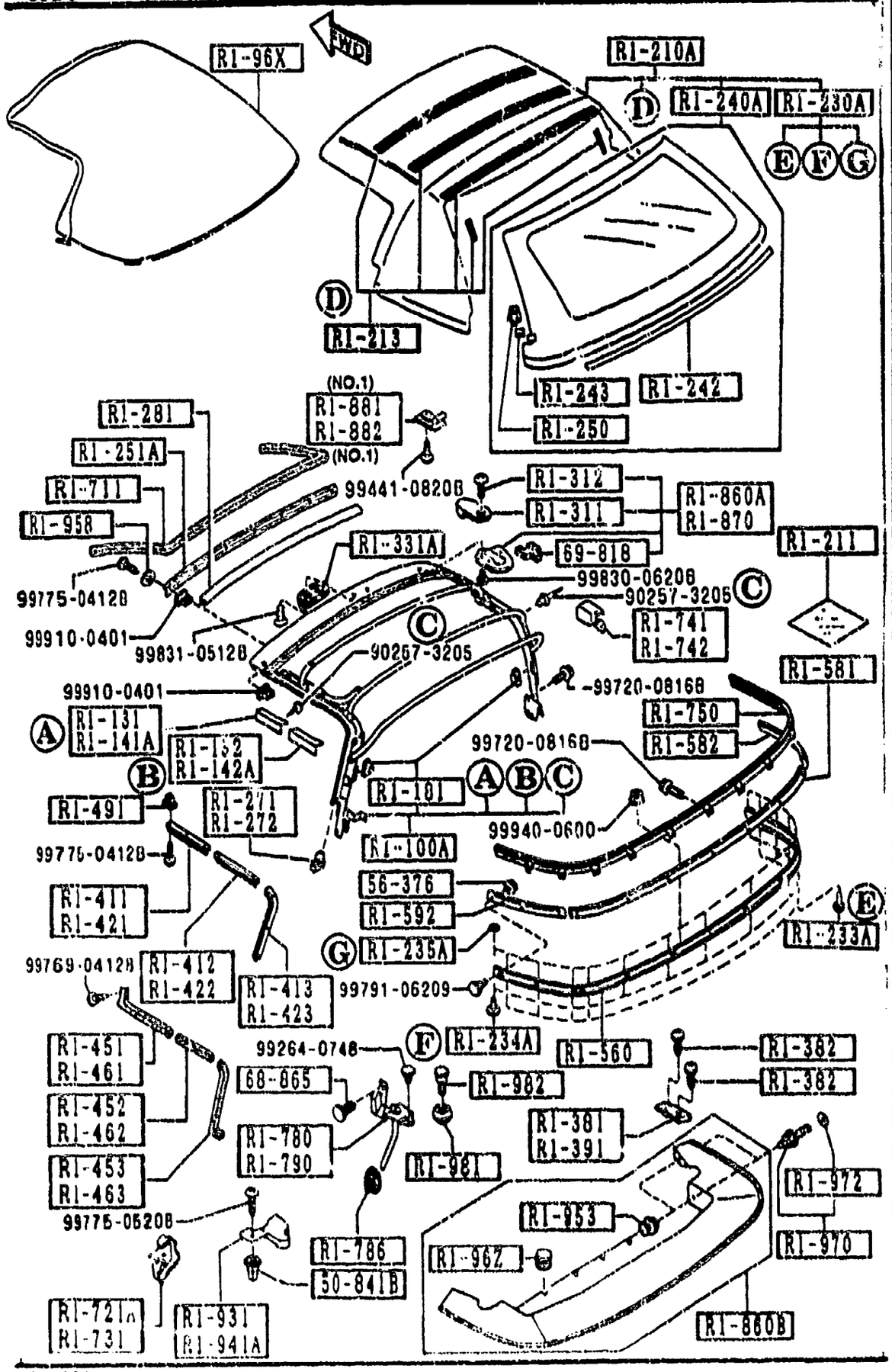

AUNA04

PART NO.	QTY	MODEL/RESTRICTION	MODEL/RESTRICTION	MODEL/RESTRICTION	FROM-TO
R1-867		WASHER'B',DECK LOCK			
NA01-R1-867	2	(W/DETACHABLE HARD T OP)			
R1-868		NUT,DECK LOCK			
NA01-R1-868	4	(W/DETACHABLE HARD T OP)			
R1-869		PIN,DECK LOCK			
NA01-R1-869	2	(W/DETACHABLE HARD T OP)			
R1-870		LOCK(L),TOP			
NA01-R1-320B AN(NA01-R1-320C)	1				-4201
NA01-R1-320B AN(NA01-R1-320C)	2				-4201
NA01-R1-320C	1	(W/O DETACHABLE HARD TOP)			4201-
NA01-R1-320C	2	(W/DETACHABLE HARD T OP)			4201-
R1-871		COVER(L),DECK LOCK			
NA01-R1-871	1	(W/DETACHABLE HARD T OP)			
R1-874		SHEET(L),DECK LOCK			
NA01-R1-874	1	(W/DETACHABLE HARD T OP)			
R1-881		STRIKER(R),LOCK-TOP			
NA01-R1-361B	1	(ILLUST. NO.1)			
NA02-R1-361B	1	(ILLUST. NO 2) (W/DETACHABLE HARD T OP)			
R1-882		STRIKER(L),LOCK-TOP			
NA01-R1-371B	1	(ILLUST. NO.1)			
NA02-R1-371B	1	(ILLUST. NO.2) (W/DETACHABLE HARD T OP)			
R1-882A		RETAINER(R),WTHSTP-D .TOP			
NA01-R1-882	1	(W/DETACHABLE HARD T OP)			

4201 NA3***-511601

6330 SUNROOF (2/2)

(W/DETACHABLE HARDTOP)

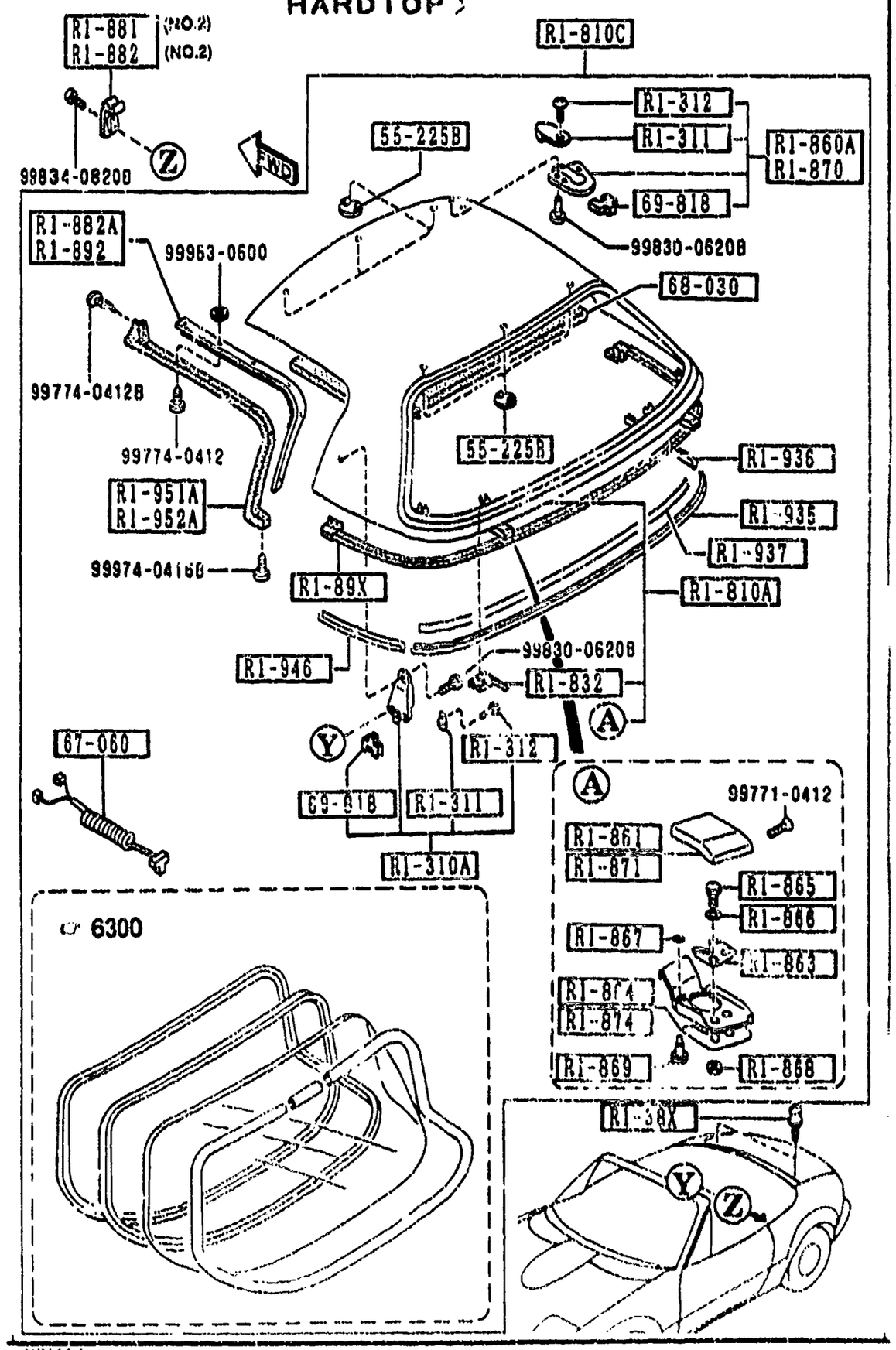

PART NO.	QTY	MODEL/RESTRICTION	MODEL/RESTRICTION	MODEL/RESTRICTION	FROM-TO
R1-89X NA01-R1-89XA	1	WEATHERSTRIP,D.TOP-REAR (W/DETACHABLE HARD TOP)			
R1-892 NA01-R1-892	1	RETAINER(L),WTHSTP-D.TOP (W/DETACHABLE HARD TOP)			
R1-931 NA01-R1-931A	1	COVER(R),BELT LINE			
R1-935 NA01-R1-935B	1	PROTECTOR(C),EDGE-D.TOP (W/DETACHABLE HARD TOP)			
R1-936 NA01-R1-936A	1	PROTECTOR(R),EDGE-D.TOP (W/DETACHABLE HARD TOP)			
R1-937 NAY1-R1-937	1	TAPE,EDGE PROTECTOR-CTR			
R1-941A NA01-R1-941A	1	COVER(L),BELT LINE			
R1-946 NA01-R1-946A	1	PROTECTOR(L),EDGE-D.TOP (W/DETACHABLE HARD TOP)			
R1-951A NA01-R1-881B	1	WTHSTP(R),ROOF PANEL (W/DETACHABLE HARD TOP)			
R1-952A NA01-R1-891B	1	WTHSTP(L),ROOF PANEL (W/DETACHABLE HARD TOP)			
R1-953 B235-R1-953	4	HOOK,HOOD-REAR CORNER			
R1-958 B235-R1-958A	7	WASHER,HOOK'A'&'B'			

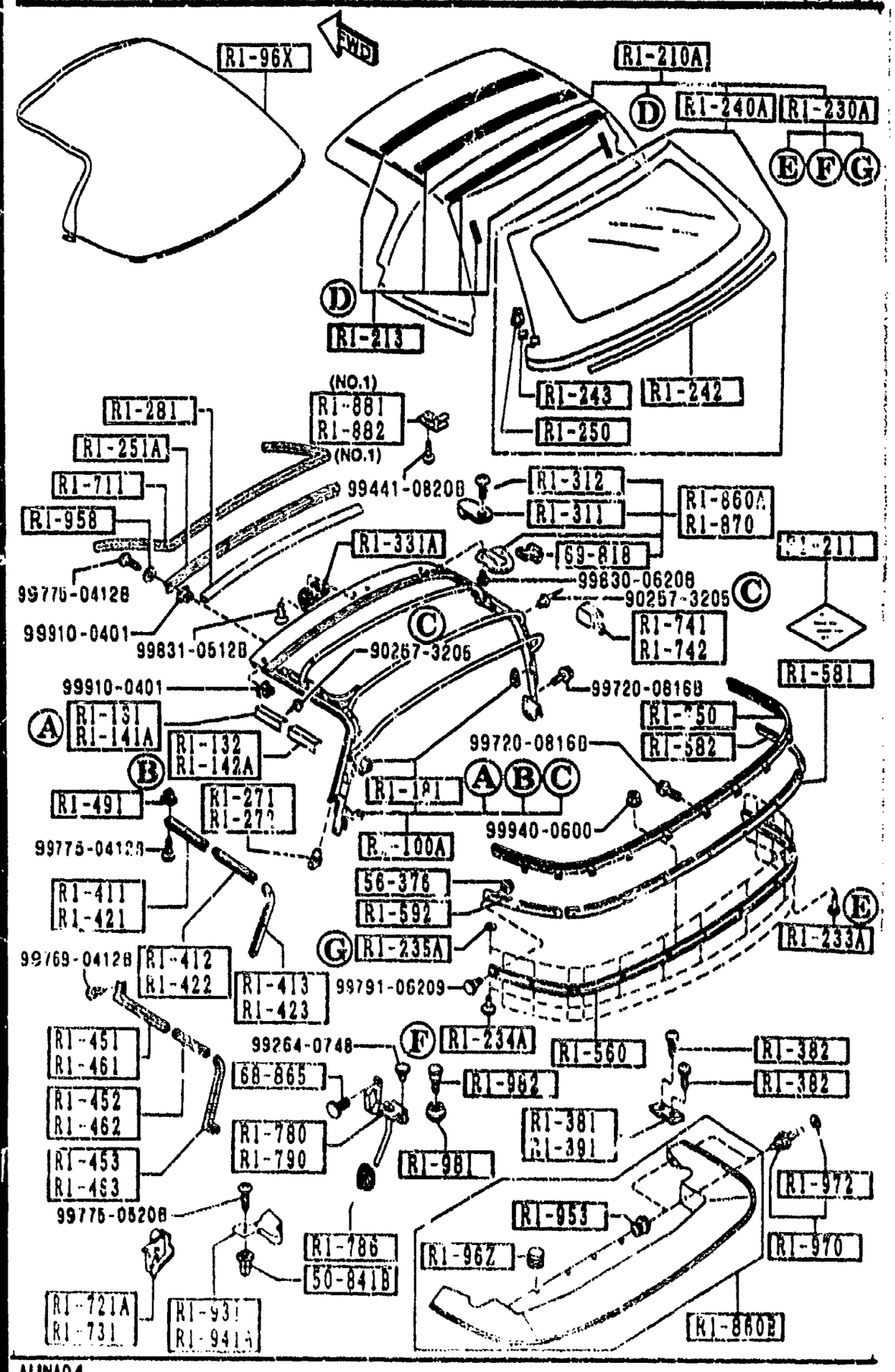

PART NO.	QTY	MODEL/RESTRICTION	MODEL/RESTRICTION	MODEL/RESTRICTION	FROM-10
R1-96X		COVER,TOP FABRIC			
NA01-R1-96XC	1	(W/O DETACHABLE HARD TOP)			
R1-96Z		HOOK,TOP BOUT			
NA01-R1-96Z	7				
00	INT-	NA3 BLACK			
75	INT-	NA5 NA4 NA6 SILVER			
R1-970		HOOK,REAR DECK			
NA01-R1-970A	4				
R1-972		WASHER,HOOK'A'			
NA01-R1-926	4				
R1-981		STOPPER,SOFT TOP			
NA01-R1-981A	2				
R1-982		BOLT,STOPPER-SOFT TOP			
NA01-R1-982A	2				
50-841B		GROMMET,SCREW			
H260-50-841	2				
55-225B		COVER,HOLE			
G030-55-225	6	(W/DETACHABLE HARD TOP)			
00	INT-	NA3 NA5 NA4 NA6 BLACK			
56-376		NUT,SELF LOCK			
B001-56-376	13				
67-060		HARNESS NO.2,REAR			
N007-67-060A	1	(W/DETACHABLE HARD TOP)			
68-030		CEILING,TOP			
N007-68-031	1	(W/DETACHABLE HARD TOP)			
00	INT-	NA3 NA5 NA4 NA6 BLACK			

6330 SUNROOF (2/2)

(W/DETACHABLE HARDTOP)

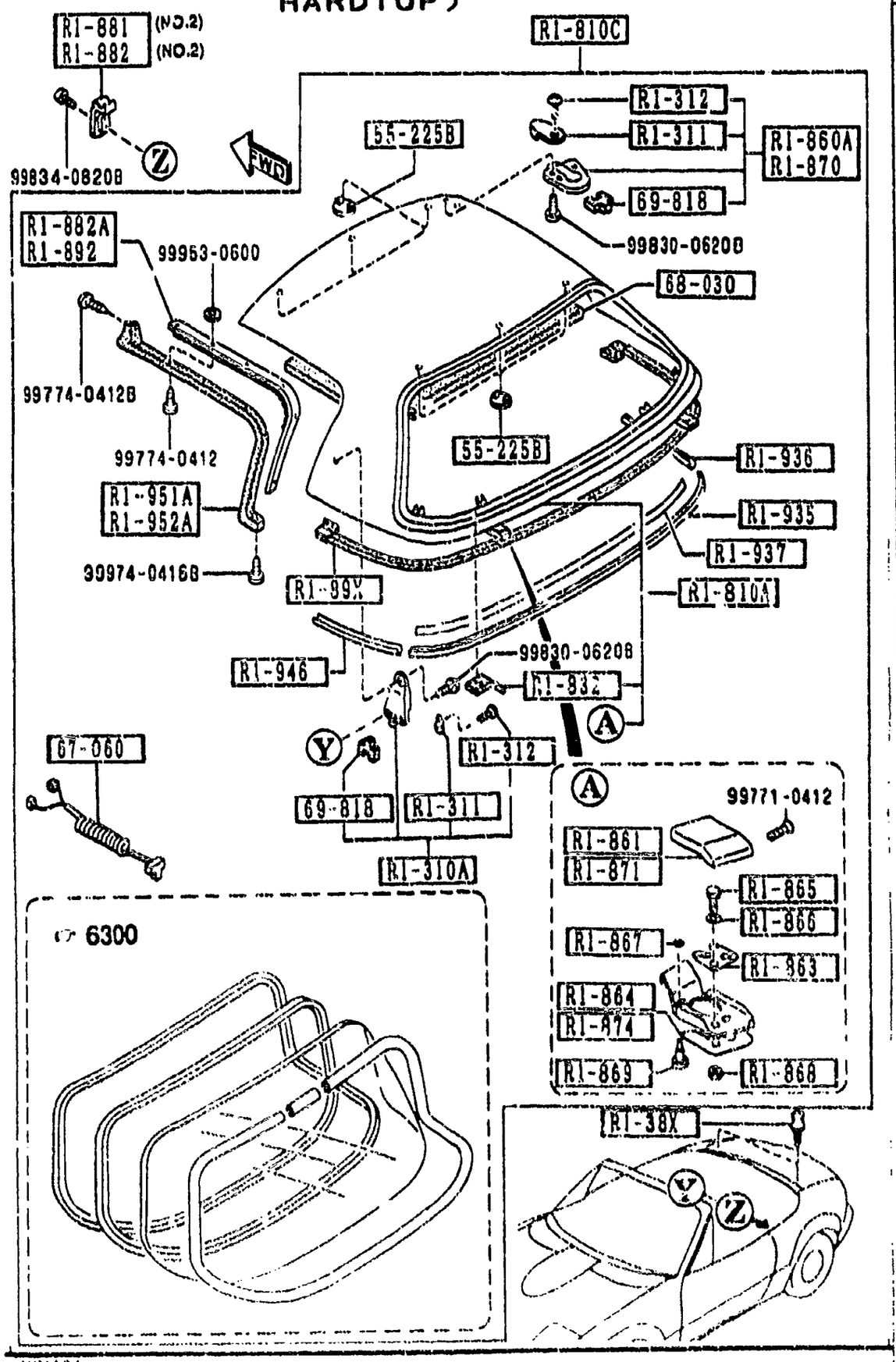

PART NO.	QTY	MODEL/RESTRICTION	MODEL/RESTRICTION	MODEL/RESTRICTION	FROM-TO
68-865		FASTENER			
G032-68-865A	2				
00	INT-	NA3 NA5 NA4 NA6 BLACK			
69-818		PAD			
NA01-R1-313	2	(W/O DETACHABLE HARD TOP)			
NA01-R1-313	6	(W/DETACHABLE HARD TOP)			

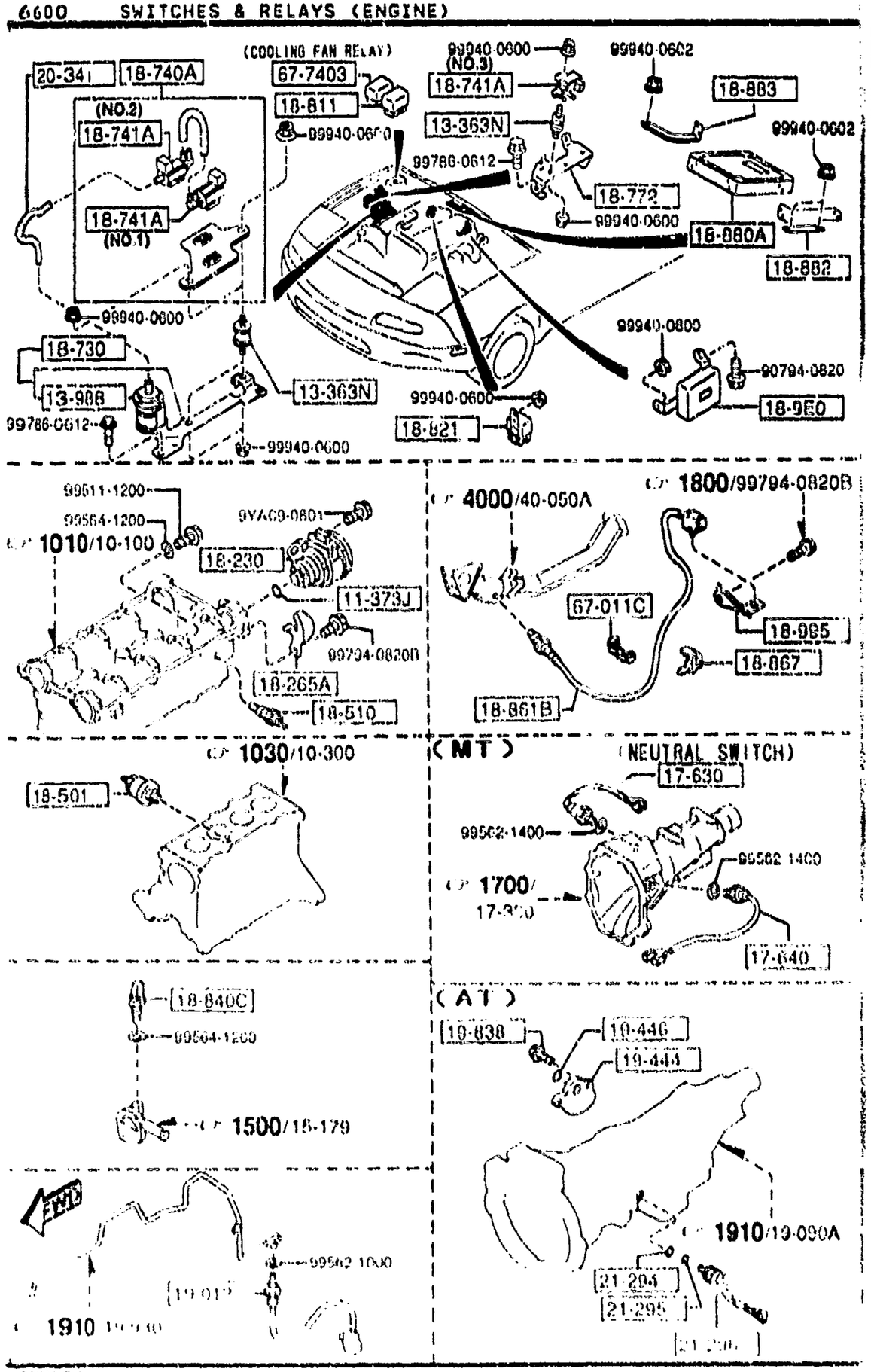

PART NO.	QTY	MODEL/RESTRICTION	MODEL/RESTRICTION	MODEL/RESTRICTION	FROM-TO
11-373J		RING,'O'			
99541-03801	1				
13-363N		RUBBER,MOUNTING			
0222-13-363	3				
13-988		FILTER,AIR			
RFG1-13-988A	1				
17-630		SWITCH			
8118-17-640B	1				
17-640		SWITCH,BACK UP LAMP			
M506-17-640A	1				
18-230		SENSOR,CRANKSHAFT POSI.			
BPE8-18-230	1				
18-265A		BRACKET,COUPLER-KNOCK SENSOR			
BPE8-18-281A	1				
18-501		SWITCH,OIL PRESSURE			
B61P-18-501	1				
18-510		UNIT,HEAT GAUGE			
B541-18-51X	1	PANASONIC			
KL01-18-51X	1	NIHON THERMOSTAT			
18-730		FILTER,AIR			
BPE8-18-730	1				
18-740A		VALVE,SOLENOID			
BPE8-18-74X	1				
18-741A		VALVE,THREE WAY			
F2L3-18-741	1	(ILLUST. NO.1)			
F2L4-18-741	1	(ILLUST. NO.2)			
JE16-18-741	1	NIHON OIL SEAL (ILLUST. NO.3)			

6600 -2 SWITCHES & RELAYS (ENGINE)

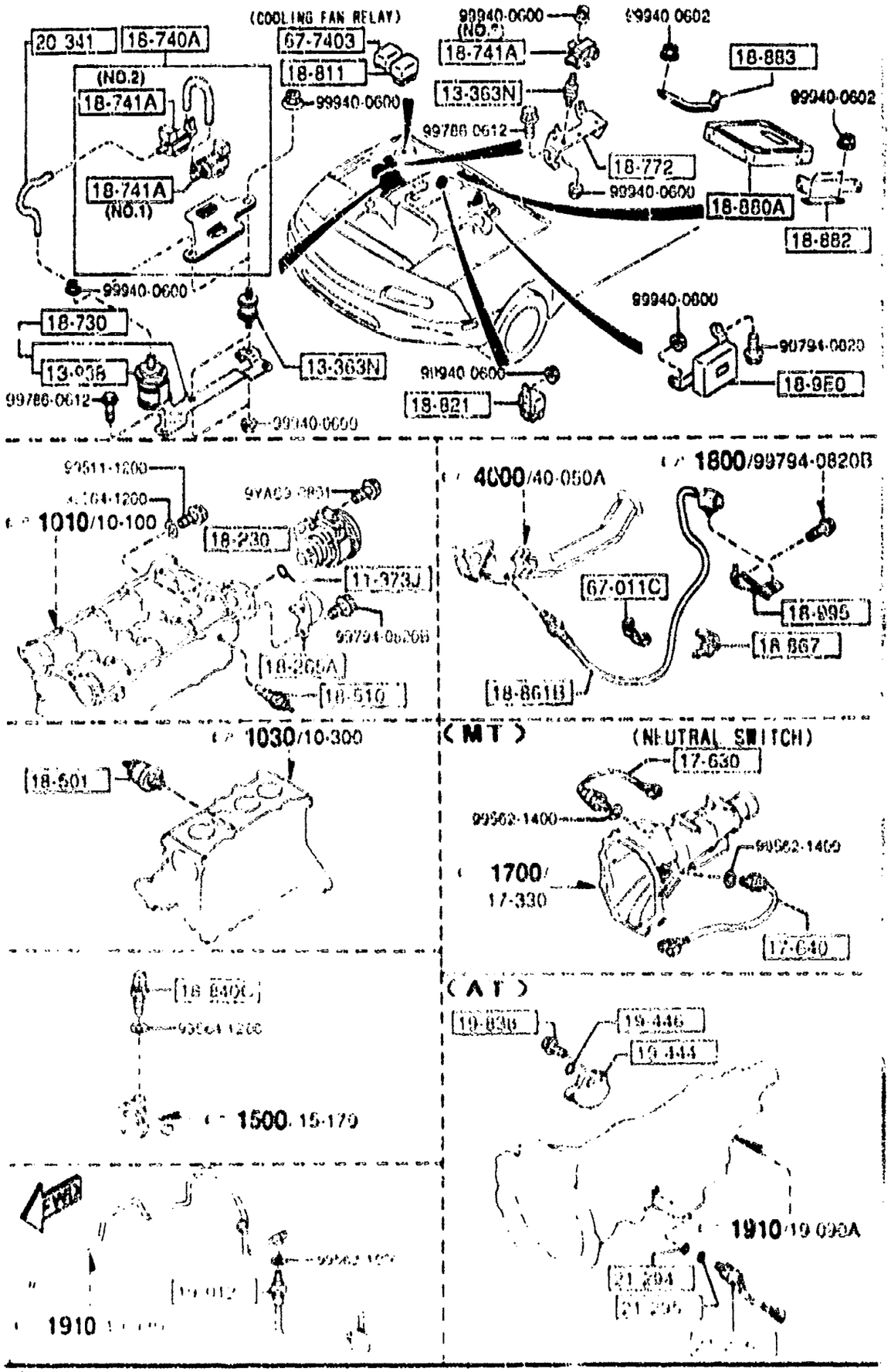

PART NO.	QTY	MODEL/RESTRICTION	MODEL/RESTRICTION	MODEL/RESTRICTION	FROM-TO
18-772		BRACKET,IGNITER			
BPE8-18-2F0	1				
18-811		RELAY,MAIN			
B6S8-18-811	1				
18-821		RELAY,FUEL PUMP			
B577-18-821A	1				
18-840C		SENSOR,TEMP.-ENG.COOLANT			
B593-18-840A	1				
18-861B		SENSOR,OXYGEN			
BPE8-18-861A	1				
18-867		CLIP			
BPE8-18-867A	1				
18-880A		MODULE,POWERTRAIN CONTROL			
BPE0-18-881	1				
18-882		BRACKET,CONTROL UNIT			
BPE0-18-882	1				
18-883		BRACKET,CONTROL UNIT			
BPE8-18-883A	1				
18-9E0		MODULE,PWT.CONTROL			
BPE9-18-9E1A	1	(AT)			
18-995		CLIP			
BPE8-18-9988	1				
19-012		SENSOR,OIL TEMP			
N451-19-012A	1	(AT)			
19-444		SWITCH,INHIBITOR			
N451-19-444	1	(AT)			
19-446		RING,'O'			
0338-19-446	1	(AT)			

6600 SWITCHES & RELAYS (ENGINE)

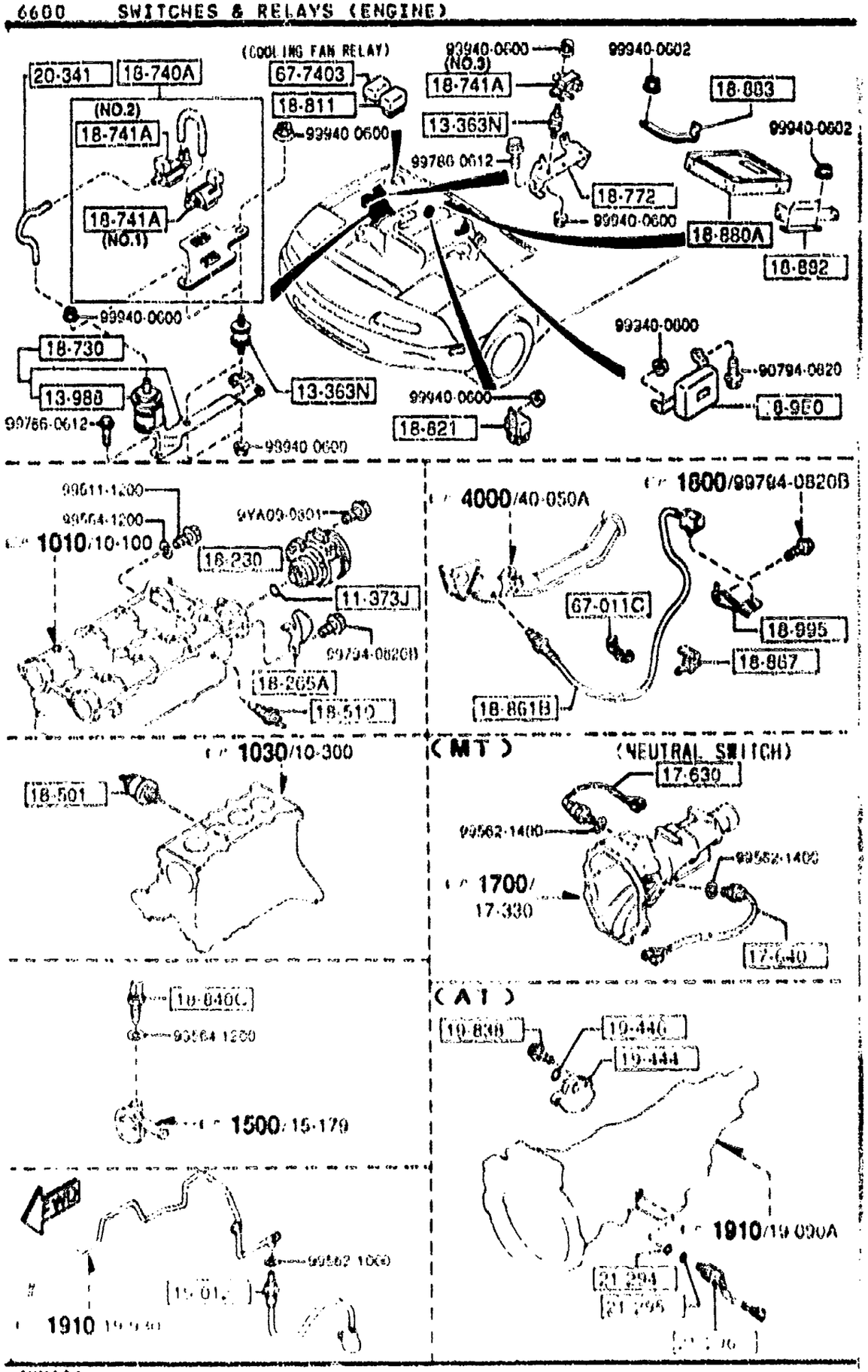

PART NO.	QTY	MODEL/RESTRICTION	MODEL/RESTRICTION	MODEL/RESTRICTION	FROM-TO
19-838		BOLT-HEX,HD WASHER			
1758-19-838A	2	(AT)			
20-341		HOSE,VACUUM			
BPE8-20-341	1				
21-294		RING,'O'			
BU01-21-294	1	(AT)			
21-295		RING,'O'			
BU01-21-295	1	(AT)			
21-296		SOLENOID,LOCK UP CONTROL			
N451-21-3A5	1	(AT)			
67-011C		CLIP			
E356-18-141	1				
67-7403		RELAY,N.O.			
LA10-67-740	1	10A (COOLING FAN RELAY)			

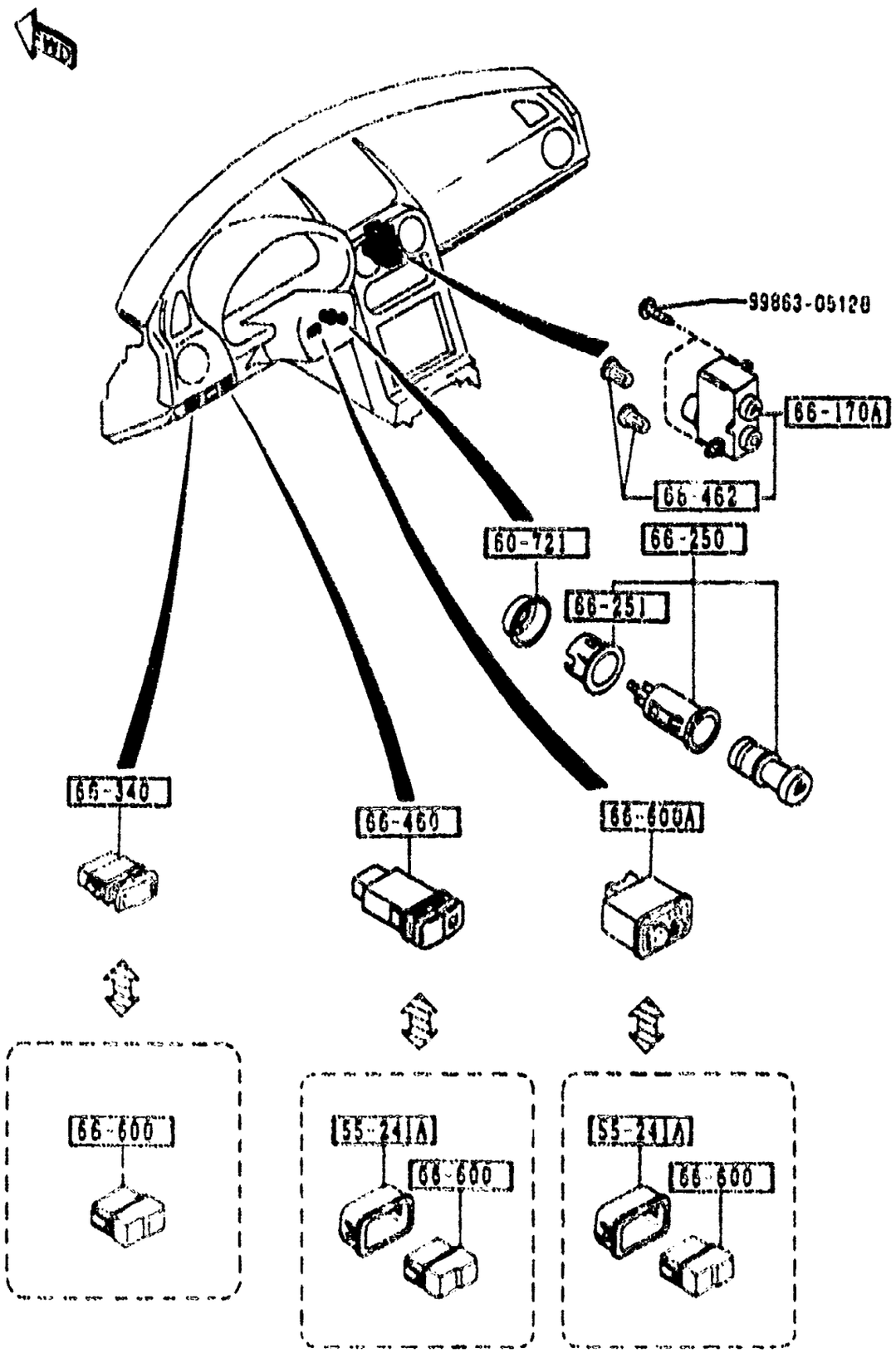

PART NO.	QTY	MODEL/RESTRICTION	MODEL/RESTRICTION	MODEL/RESTRICTION	FROM-TO
55-241A		BOX,INSTRUMENT PANEL			
NA01-55-241A	2				
00	INT-	NA3 NA5 BLACK			
60-721		PROTECTOR			
B092-66-241A	1				
66-170A		SWITCH(R),CLUSTER			
NA01-66-170	1	(PLS CHECK LOCATION W/ILLUST.)			
66-250		LIGHTER,CIGAR			
B150-66-250	1				
66-251		RING,ILLUMINATION			
B001-66-251	1				
66-340		SWITCH,MAIN			
NA01-66-340A	1	PKG-B, PKG-C, (W/AUTO CRUISE.CONT.)			
66-460		SWITCH,RR.DEF.			
NA75-66-460	1	(W/DETACHABLE HARD TOP)			
66-462		BULB'B',SWITCH-RR DEFGER			
NA01-66-462	2				
66-600		COVER,HOLE			
B001-55-225	3				
66-600A		SWITCH,RMT.MIRROR			
NA52-66-600A	1	PKG-A, PKG-B, PKG-C, (DR MIRROR ELECT.)			

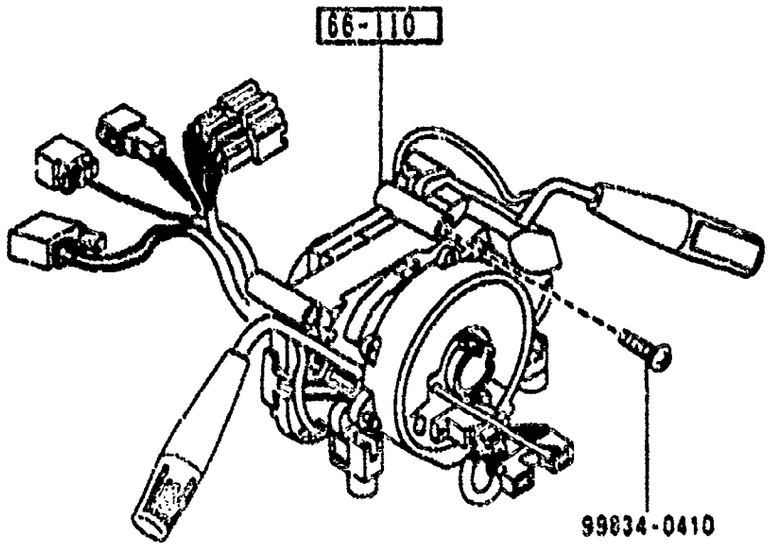

The inner parts of the combination switch with air bag are not serviced separately.

PART NO.	QTY	MODEL/RESTRICTION	MODEL/RESTRICTION	MODEL/RESTRICTION	FROM-TO
66-110		SWITCH,COMBINATION			
NA01-66-120B	1	BASE, PKG-A, PKG-B, (W/O AUTO CRUISE.CONT.)			
NA02-66-120B	1	PKG-B, PKG-C, (W/AUTO CRUISE.CONT.)			

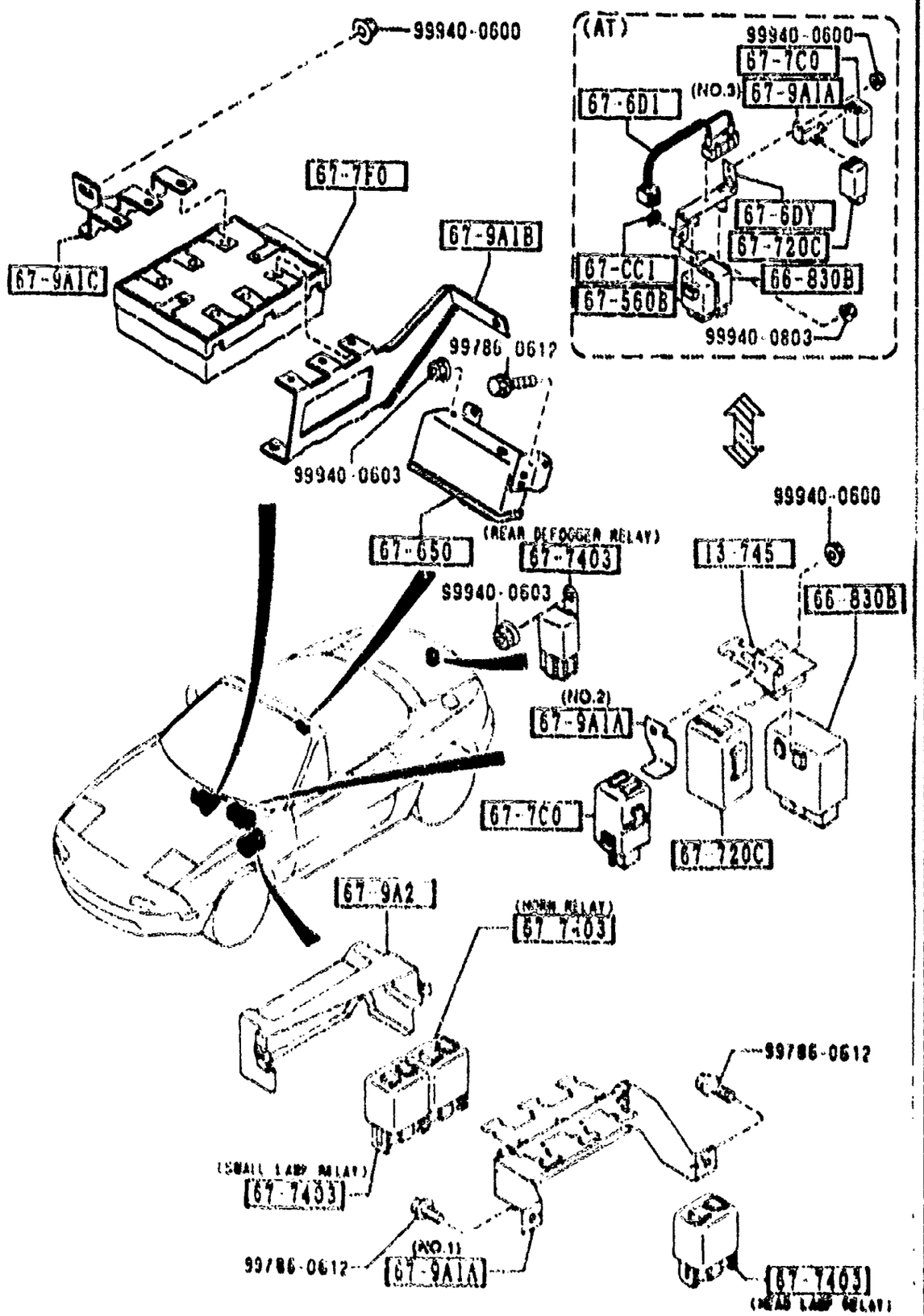

AUNA04

6630 -1 RELAYS & UNIT (BODY)

PART NO.	QTY	MODEL/RESTRICTION	MODEL/RESTRICTION	MODEL/RESTRICTION	FROM-TO
13-745		BRACKET,RELAY			
NA02-67-9A1	1				
66-830B		UNIT,FLASHER			
HE01-66-830	1				
67-CC1		CLIP,HARNESS			
LA01-67-C11	1	(AT)			
67-560B		UNIT,CENTRAL PROCESS ING			
NA56-67-560	1	(AT)			
67-6DY		BRACKET,RELAY-INTERL OCK			
NA56-67-5DYA	1	(AT)			
67-6D1		RESISTOR,INTERLOCK			
M020-67-6D1	1	(AT)			
67-650		BOX,CONTROL-A.B.S.			
NA80-67-650	1	(A.LOCK BRAKE)			
67-7C0		RELAY,RETRACTOR-COWL PANEL			
B481-67-7C0B	1				
67-7F0		UNIT,DIAGNOSIS-AIR B AG			
GA2A-67-7F0A	1				
67-720C		TIMER & BUZZER			
NA02-67-720	1				
67-7403		RELAY,N.O.			
H500-67-740	1	30A (HEAD LAMP RELAY)			
LA10-67-740	2	10A (HORN RELAY) (SMALL LAMP RELAY)			
LA40-67-740	1	(REAR DEFOGGER RELAY) (W/DETACHABLE HARD T OP)			
67-9A1A		BRACKET,RELAY			
NA01-67-9A1	1	(ILLUST. NO.1)			

CAT AJHA04 03

1995-04

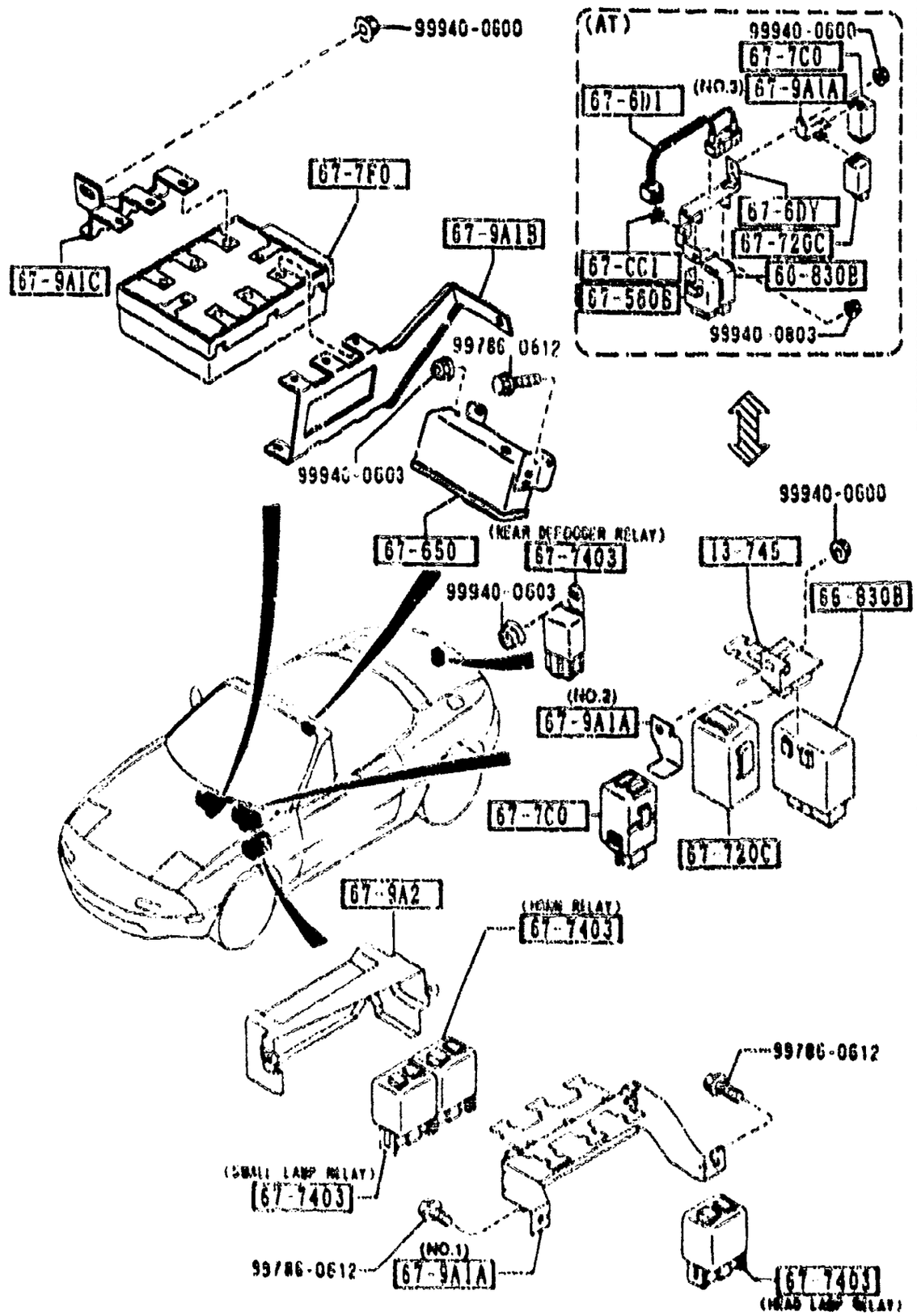

AUNA04

PART NO	QTY	MODEL/RESTRICTION	MODEL/RESTRICTION	MODEL/RESTRICTION	REMARKS
CONT'D					
NA17-67-9A1	1	(ILLUST. NO.2) (MT)			
NA81-67-9A1	1	(ILLUST. NO.3) (AT)			
67-9A1B		BRKT,DIAGNOSIS UNIT			
NA06-67-9A1B	1				
67-9A1C		BRKT,DIAGNOSIS/POWER UNIT			
NA05-67-9A1B	1				
67-9A2		COVER,RELAY			
NA02-67-9A2	1				

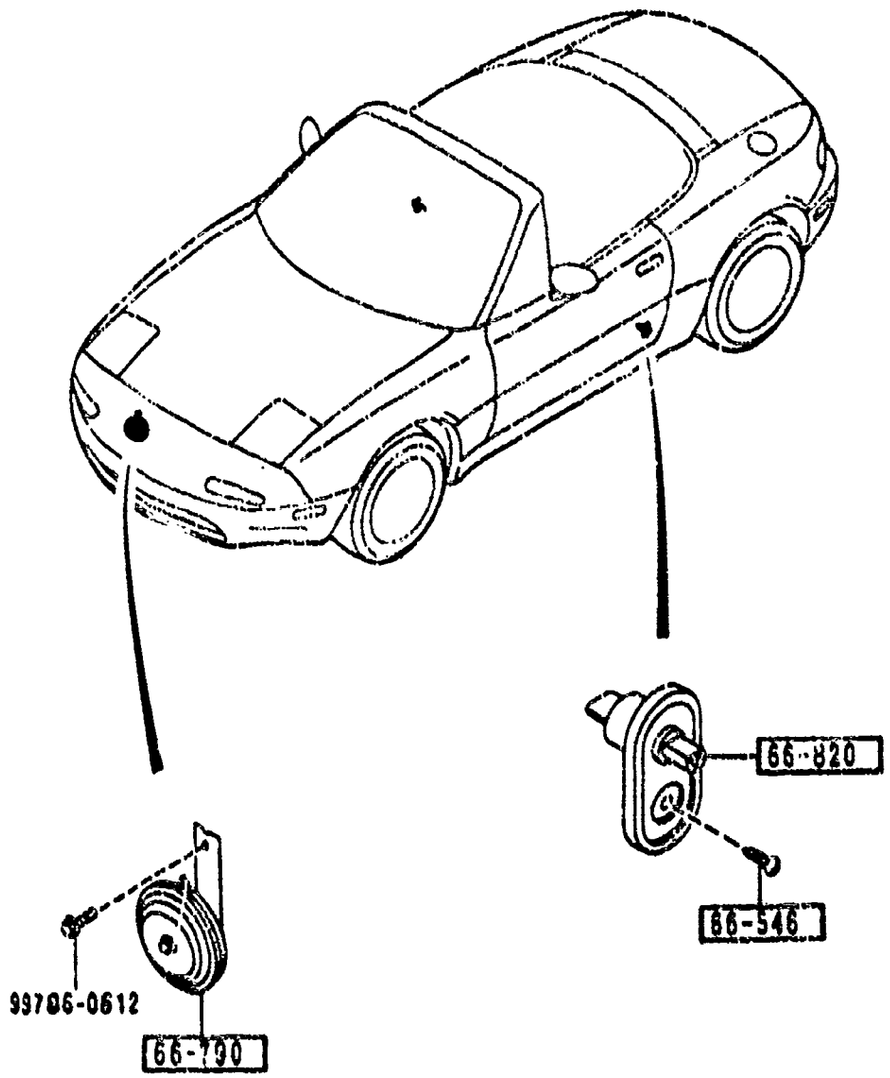

PART NO.	QTY	MODEL/RESTRICTION	MODEL/RESTRICTION	MODEL/RESTRICTION	FROM-TO
66-546		SCREW,DOOR SWITCH			
LA01-66-546	2				
66-790		HORN,LOW TONE			
SA50-66-790	1				
66-820		SWITCH,DOOR			
B455-66-540	2				

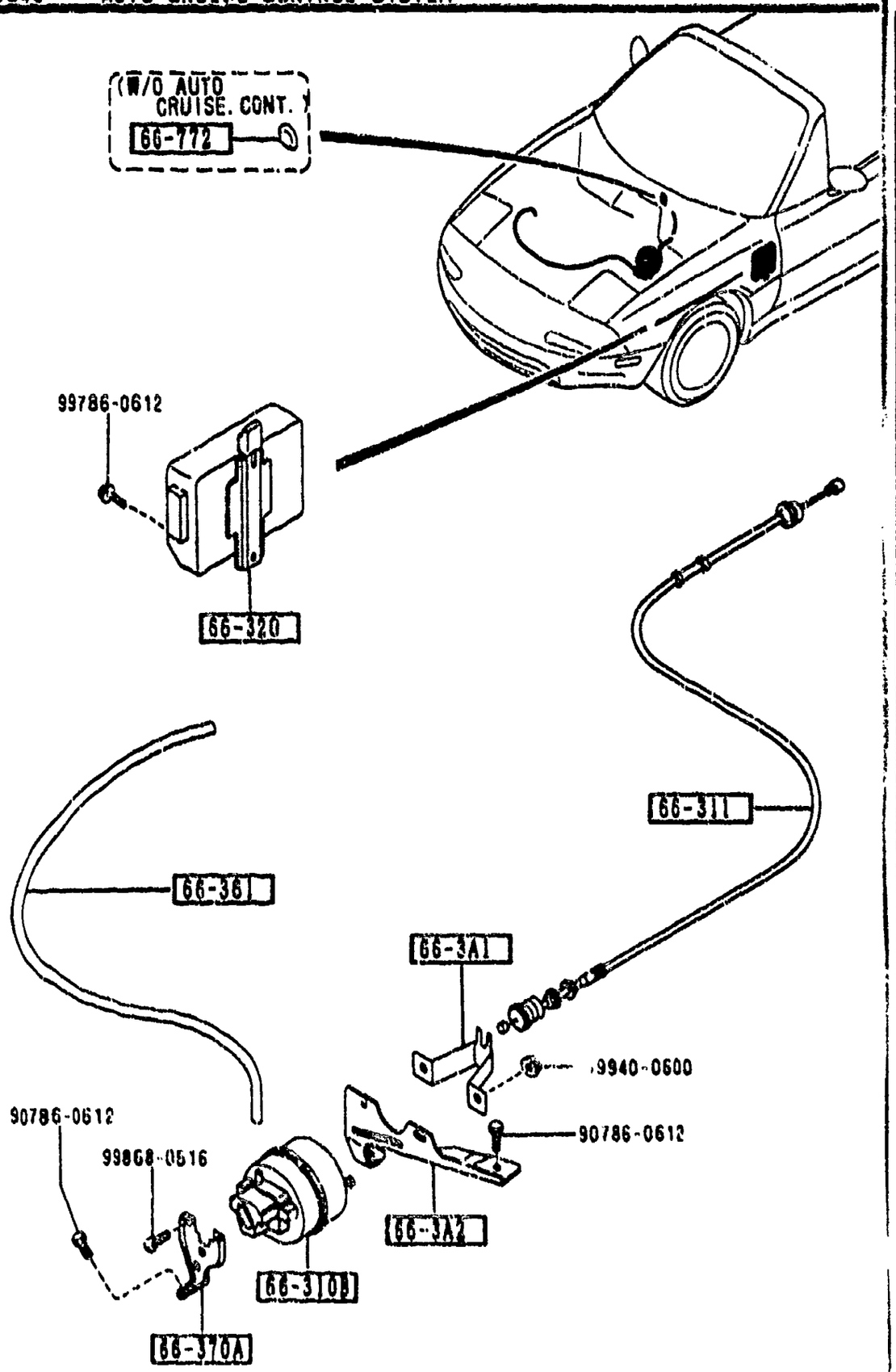

PART NO.	QTY	MODEL/RESTRICTION	MODEL/RESTRICTION	MODEL/RESTRICTION	FROM-TO
66-3A1 LA01-66-3A1	1	BRACKET,ACTUATOR-A.C.C.			
66-3A2 NA01-66-3A2A	1	BRACKET,ACTUATOR-FRONT			
66-310B LA01-66-310A	1	ACTUATOR,A.C.C.			
66-311 NA01-66-311A	1	WIRE,A.C.C.			
66-320 NA01-66-320	1	BOX,A.C.C.			
66-361 NA75-66-361	1	PIPE,AUTO CRUISE CONTROL			
66-370A NA01-66-3A3A	1	BRACKET,ACTUATOR			
66-772 B092-41-661	1	GROMMET BASE, PKG-A, PKG-R, (W/O AUTO CRUISE.CONT.)			

(W/O C.D., W/O SENSORY SOUND)

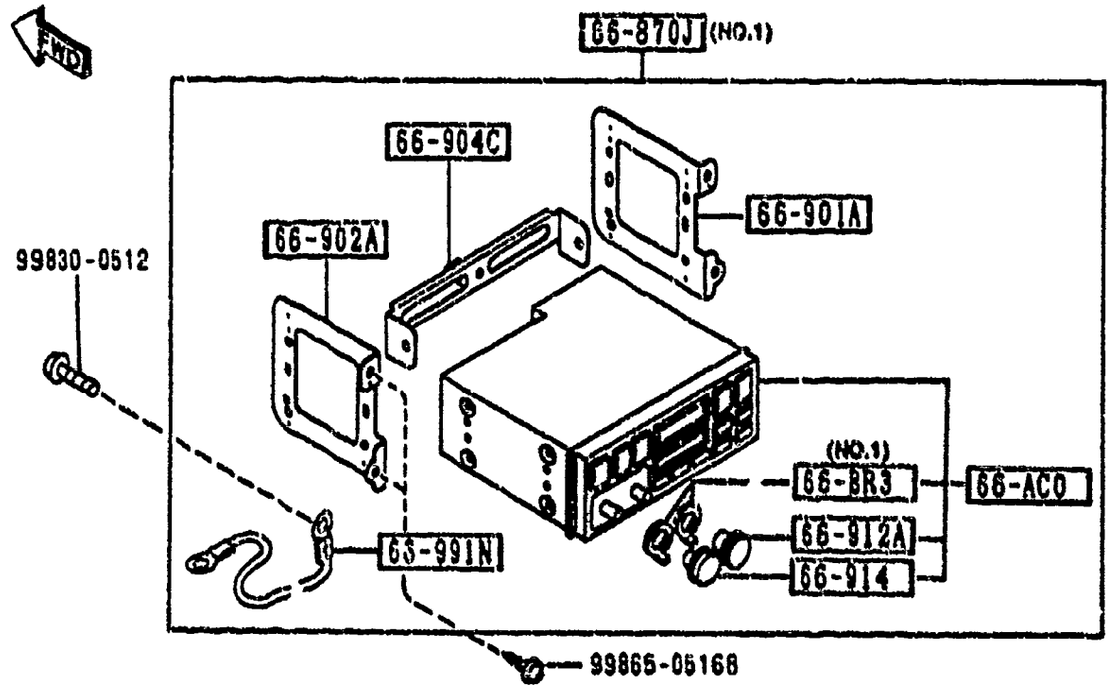

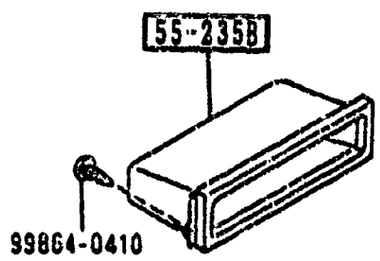

(W/C.D., W/O SENSORY SOUND)

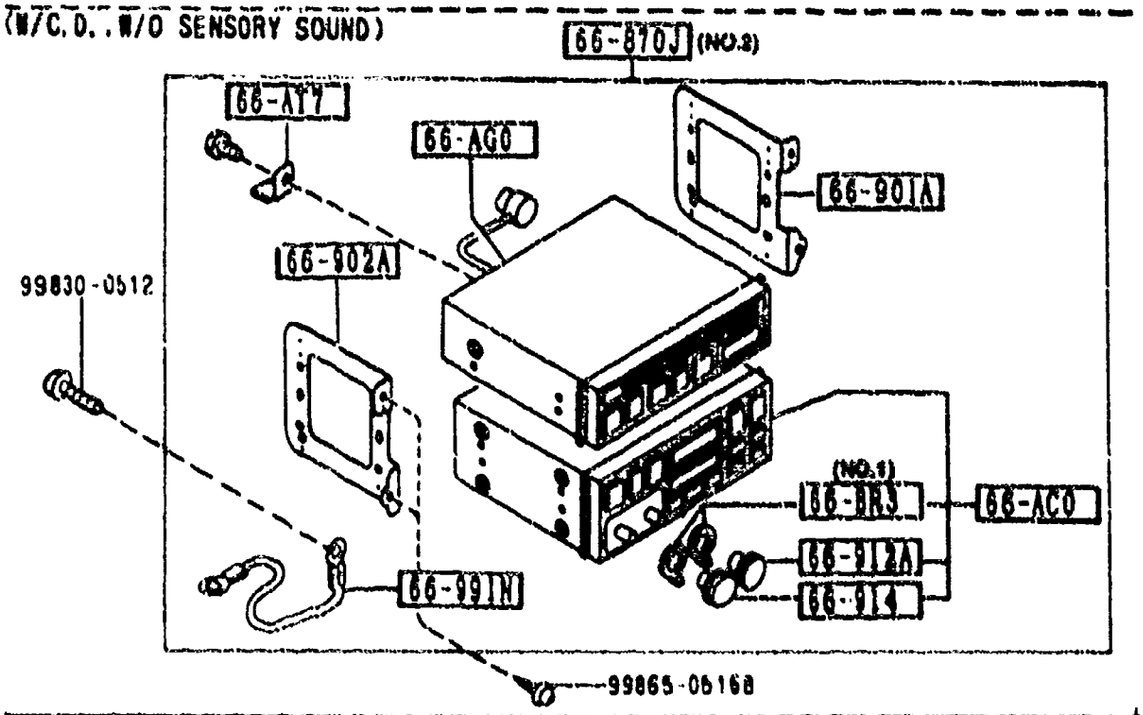

AUNA04

(W/O AUDIO)

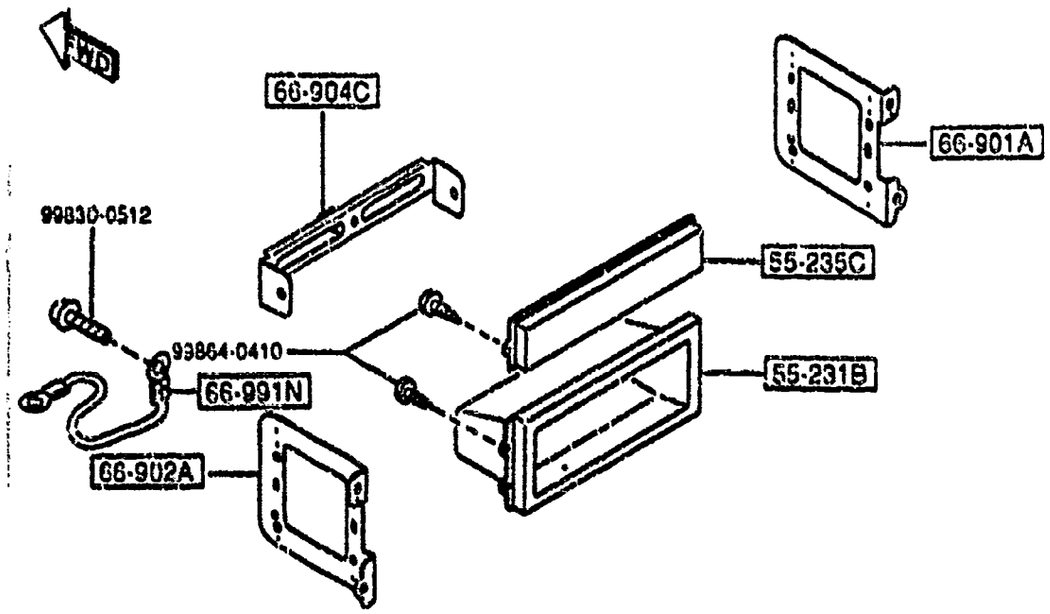

(W/C.D., W/SENSORY SOUND)

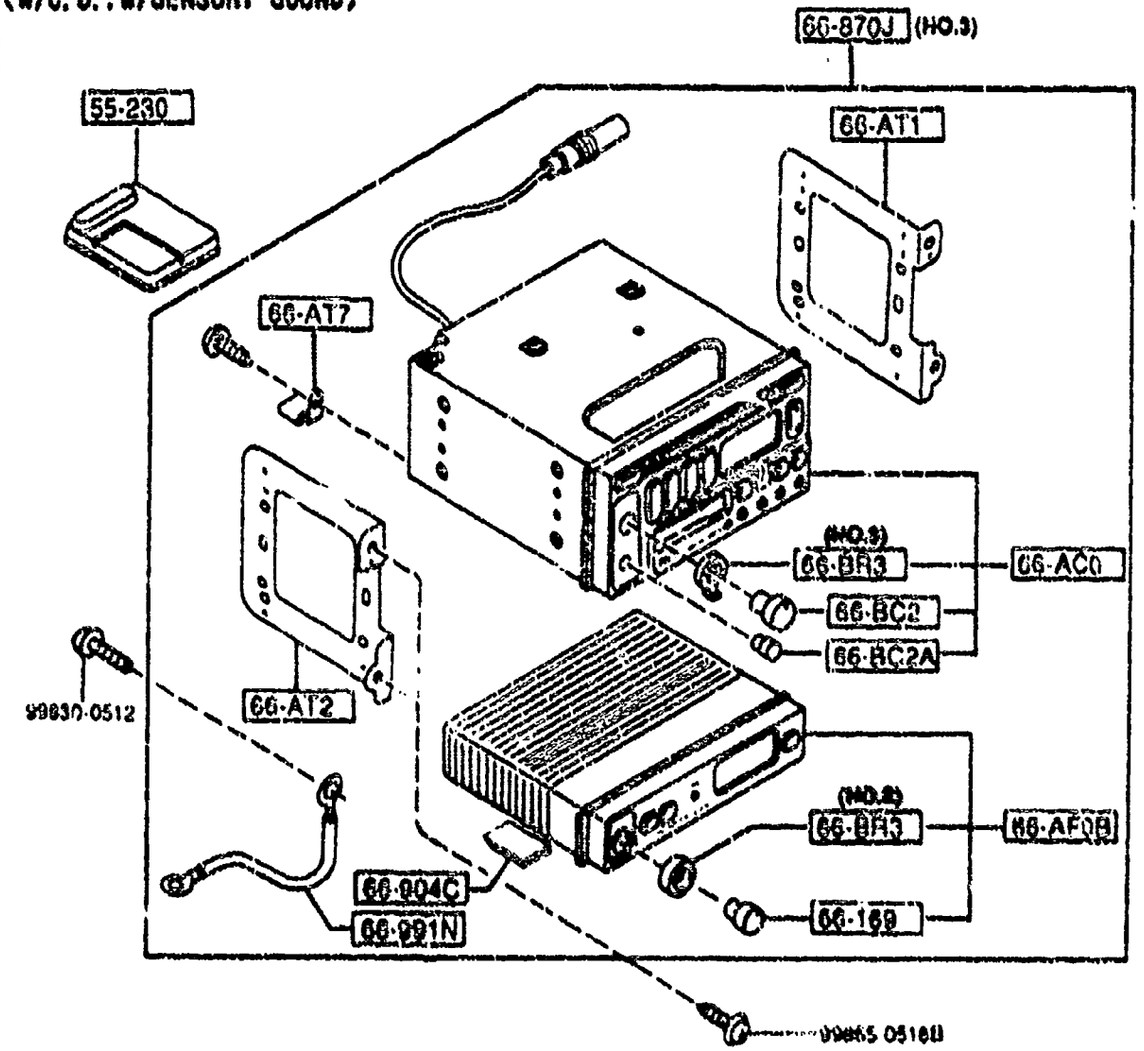

AUNA04

(NO.1)
66-870J

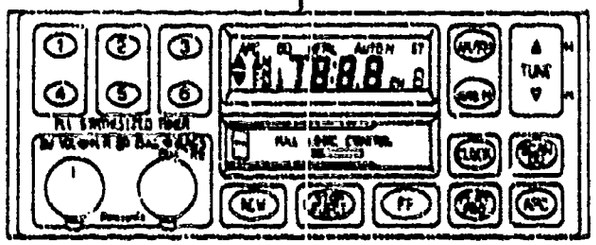

(NO.3)
66-870J

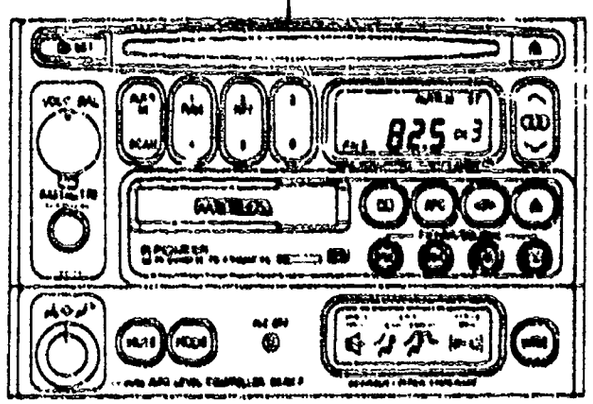

(NO.2)
66-870J

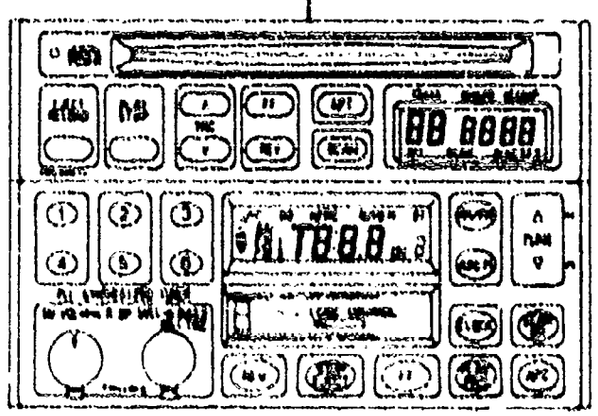

AUNA04

6680 AUDIO SYSTEMS (RADIO & TAPE DECK) (1/3)

(W/O C.D.,W/O SENSORY SOUND)

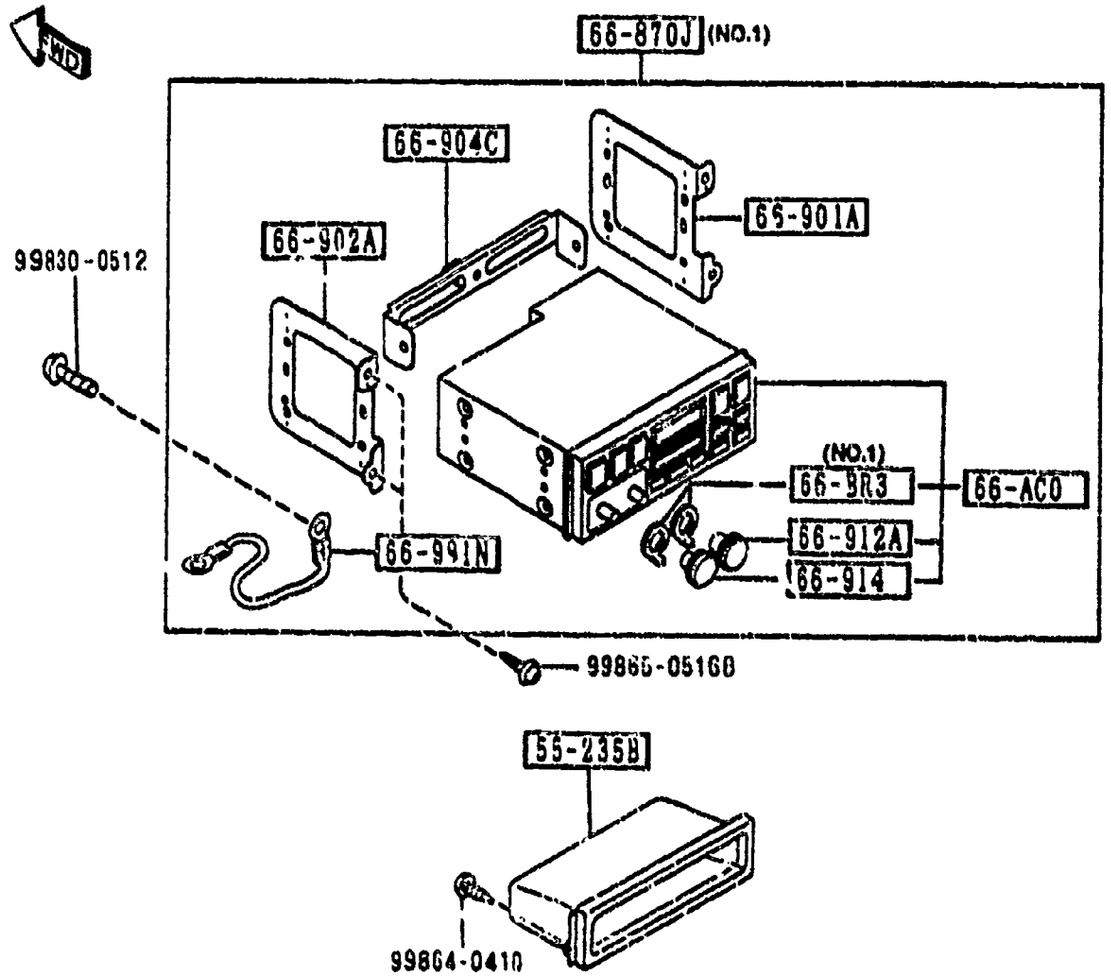

(W/C.D.,W/O SENSORY SOUND)

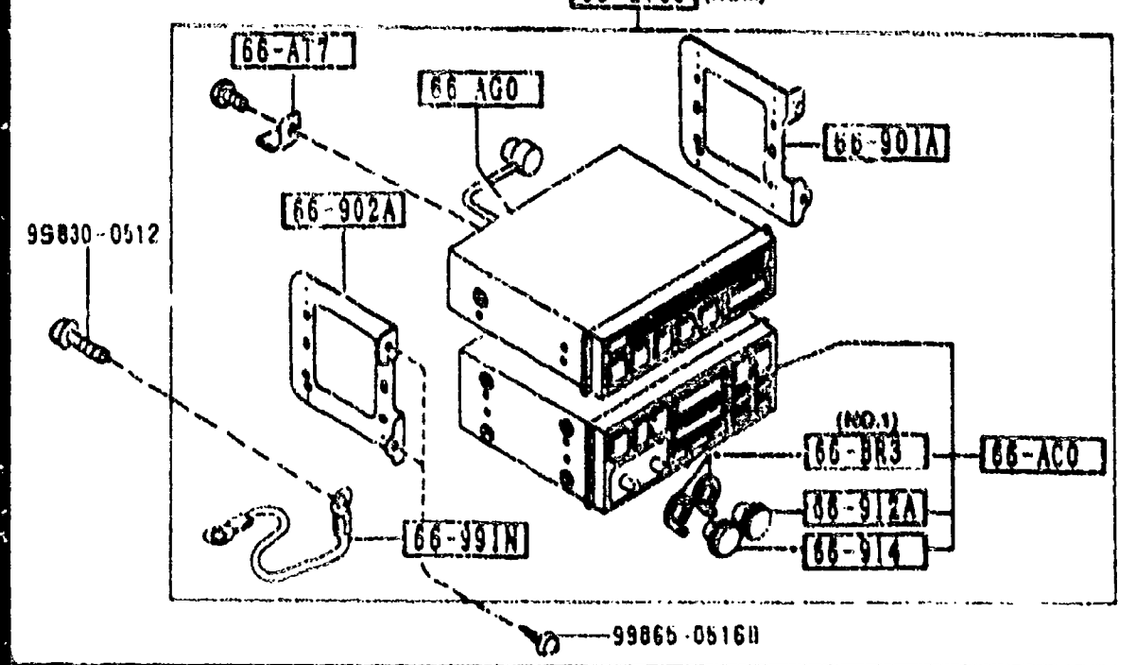

PART NO.	QTY	MODEL/RESTRICTION	MODEL/RESTRICTION	MODEL/RESTRICTION	FROM-TO
55-230		PANEL,AUDIO			
NA52-66-9H1	1	(W/SENSORY SOUND)			
55-231B		ORNAMENT,STEREO			
FC02-55-235A	1	(W/O AUDIO)			
55-235B		ORNAMENT,STEREO-UPPER			
LA03-55-235A	1	(AM/FM,W/O C.DISC)			
55-235C		ORNAMENT,STEREO-LOWER			
LA02-55-235	1	(W/O AUDIO)			
66-AC0		TUNER & DECK,COMB			
NA01-66-AC0A	1	(W/O SENSORY SOUND)			
NA52-66-AC0A	1	(W/SENSORY SOUND)			-3901
NA52-66-AC0B	1	(W/SENSORY SOUND)			3901-
66-AF0B		SOUND CONTROLLER			
NA52-66-AF0	1	(W/SENSORY SOUND)			-3901
NA52-66-AF0A	1	(W/SENSORY SOUND)			3901-
66-AG0		PLAYER,COMPACT DISC			
NA01-66-AG0	1	(W/C.D.,W/O SENSORY SOUND)			
66-AT1		BRACKET(R),FRONT-AUDIO			
N018-66-AS1	1	(W/SENSORY SOUND)			
66-AT2		BRACKET(L),FRONT-AUDIO			
N018-66-AS2	1	(W/SENSORY SOUND)			
66-AT7		BRACKET(RR),AUDIO			
N018-66-AS3	1	(W/C.D.,W/SENSORY SOUND)			
N019-66-AT7	1	(W/C.D.,W/O SENSORY SOUND)			
66-BC2		KNOB,VOLUME-TUNER & DECK			
N018-66-BC1	1	(W/SENSORY SOUND)			
66-BC2A		KNOB,BASS/TREBLE			

3901 NA5###-602560

(W/O AUDIO)

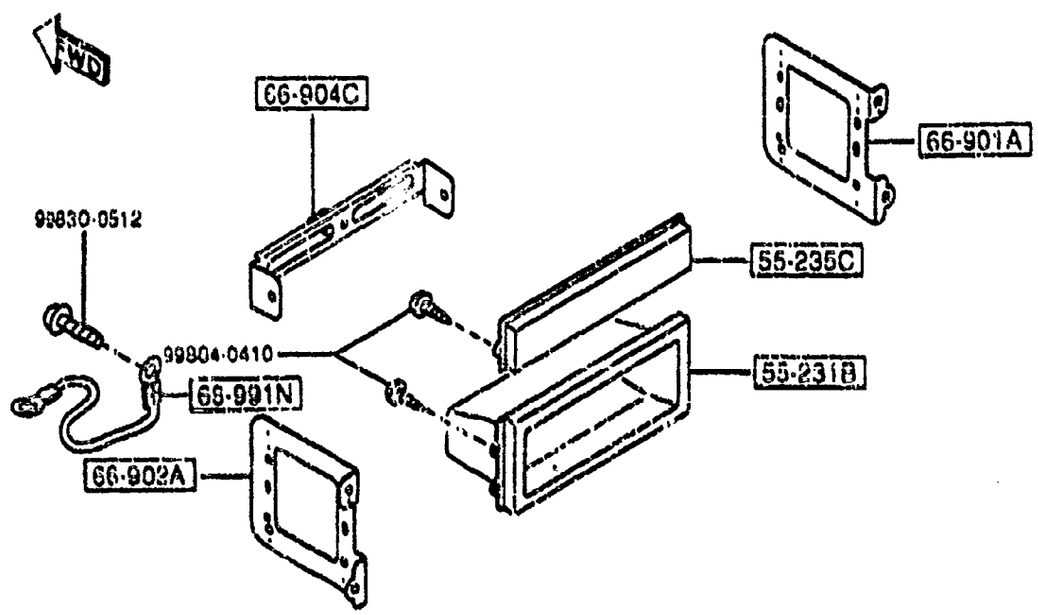

(W/C.D.,W/SENSORY SOUND)

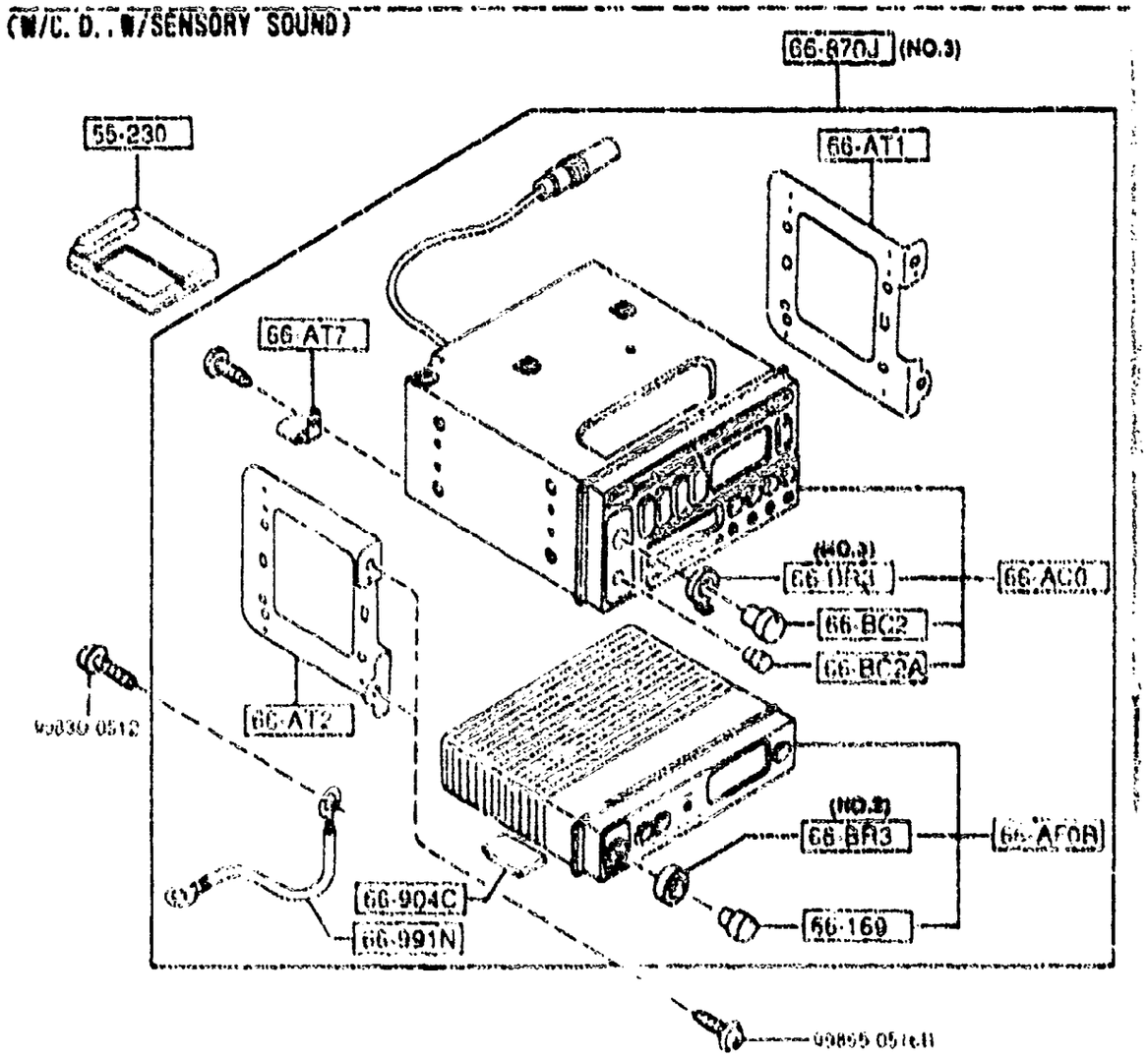

AUNA04

PART NO.	QTY	MODEL/RESTRICTION	MODEL/RESTRICTION	MODEL/RESTRICTION	FROM-TO
CONT'D					
NA52-66-BC2	1	(W/SENSORY SOUND)			
66-BR3		KNOB,BALANCE-TUNER			
NA01-66-BR3	2	(ILLUST. NO.1) (W/O SENSORY SOUND)			
NA52-66-BR3	1	(ILLUST. NO.2) (W/SENSORY SOUND)			
N010-66-BR3	1	(ILLUST. NO.3) (W/SENSORY SOUND)			
66-169		KNOB			
NA52-66-BC3	1	(W/SENSORY SOUND)			
66-870J		AUDIO SET			
NA53-66-9C0	1	(ILLUST. NO.1) (W/O C.D.,W/O SENSORY SOUND)			
NA54-66-9W0	1	(ILLUST. NO.2) (W/C.D.,W/O SENSORY SOUND)			
NA52-66-9W0A AN(NA52-66-9W0B)	1				-3901
NA52-66-9W0B	1	(ILLUST. NO.3) (W/C.D.,W/SENSORY SOUND)			3901-
66-901A		BRACKET(R),TUNER			
NA01-66-AT1	1	(W/O SENSORY SOUND)			
66-902A		BRACKET(L),TUNER			
NA01-66-AT2	1	(W/O SENSORY SOUND)			
66-904C		BRACKET,LOW			
N019-66-AT6	1	(W/O C.D.)			
N018-66-AS6	2	(W/C.D.,W/SENSORY SOUND)			3C01-
66-912A		KNOB,TONE-TUNER			
NA01-66-BR2	1	(W/O SENSORY SOUND)			
66-914		KNOB,VOLUME-TUNER			
NA01-66-BR1	1	(W/O SENSORY SOUND)			
66-991N		CORD,EARTH			

3901 NA5[illegible]-502360
3C01 NA5[illegible]-507607

(NO.1)
[66-870J]

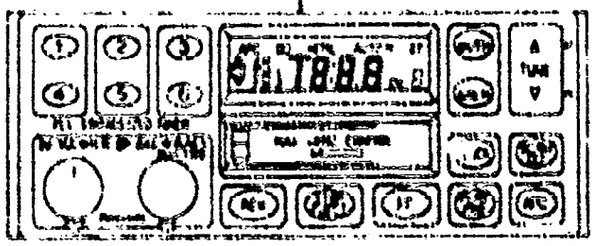

(NO.3)
[66-870J]

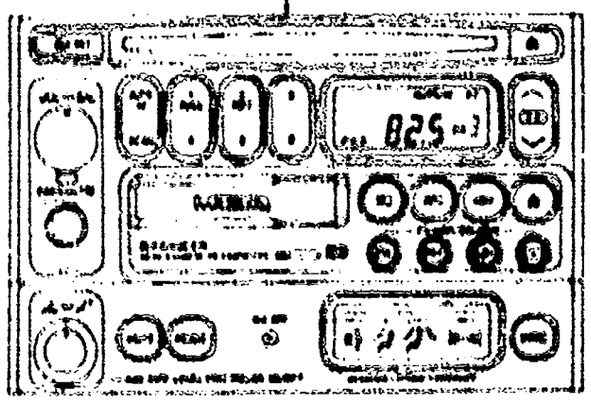

(NO.2)
[66-870J]

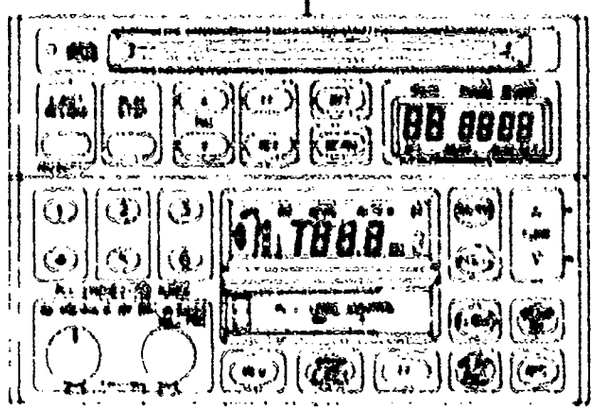

PART NO.	QTY	MODEL/RESTRICTION	MODEL/RESTRICTION	MODEL/RESTRICTION	FROM-TO
CONT'D					
NA01-66-997	1	(W/O SENSORY SOUND)			
N018-66-997	1	(W/SENSORY SOUND)			

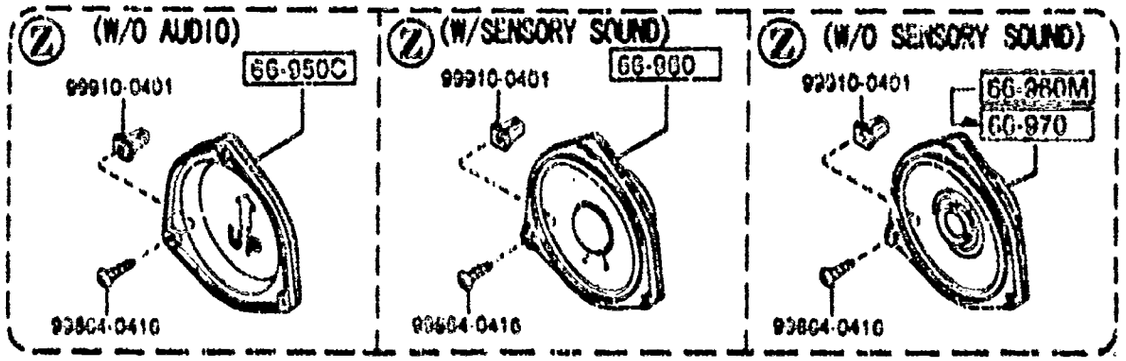
(W/O AUDIO)
66-950C
99910-0401
93804-0410
(W/SENSORY SOUND)
66-980
99910-0401
93804-0410
(W/O SENSORY SOUND)
99910-0401
66-980M
66-970
93804-0410

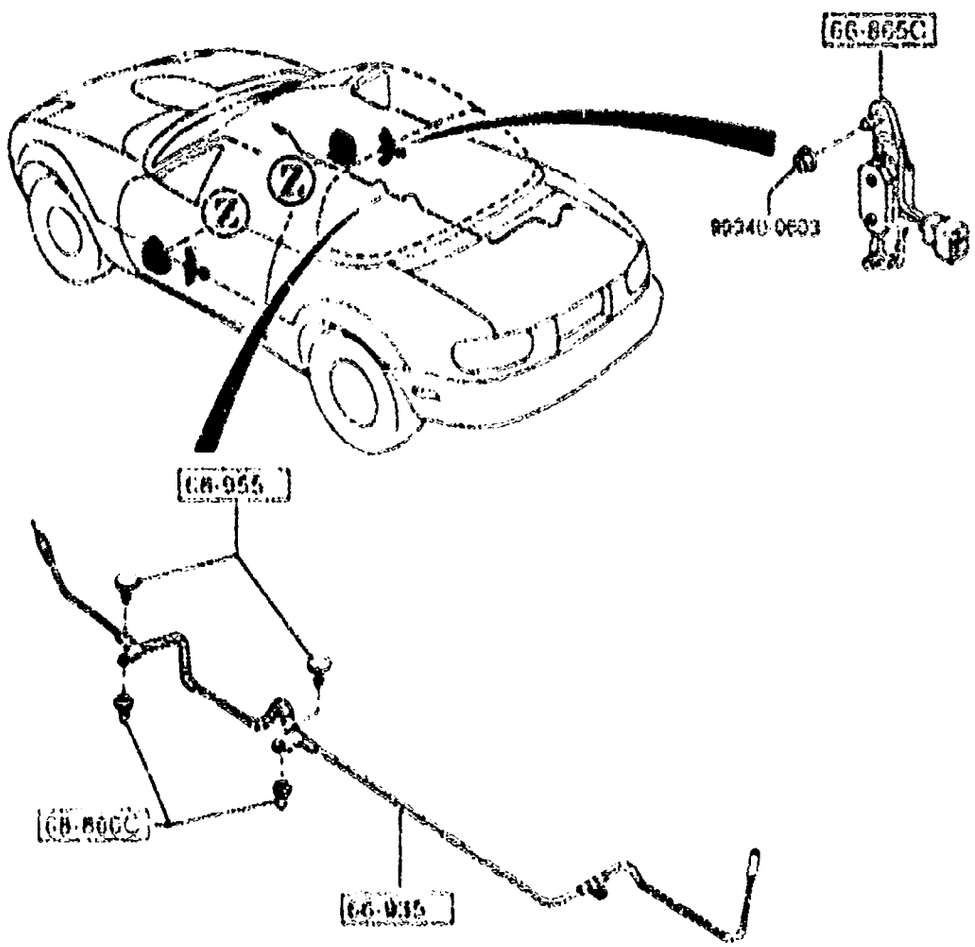
66-865C
99340-0603
66-955
66-805C
66-935

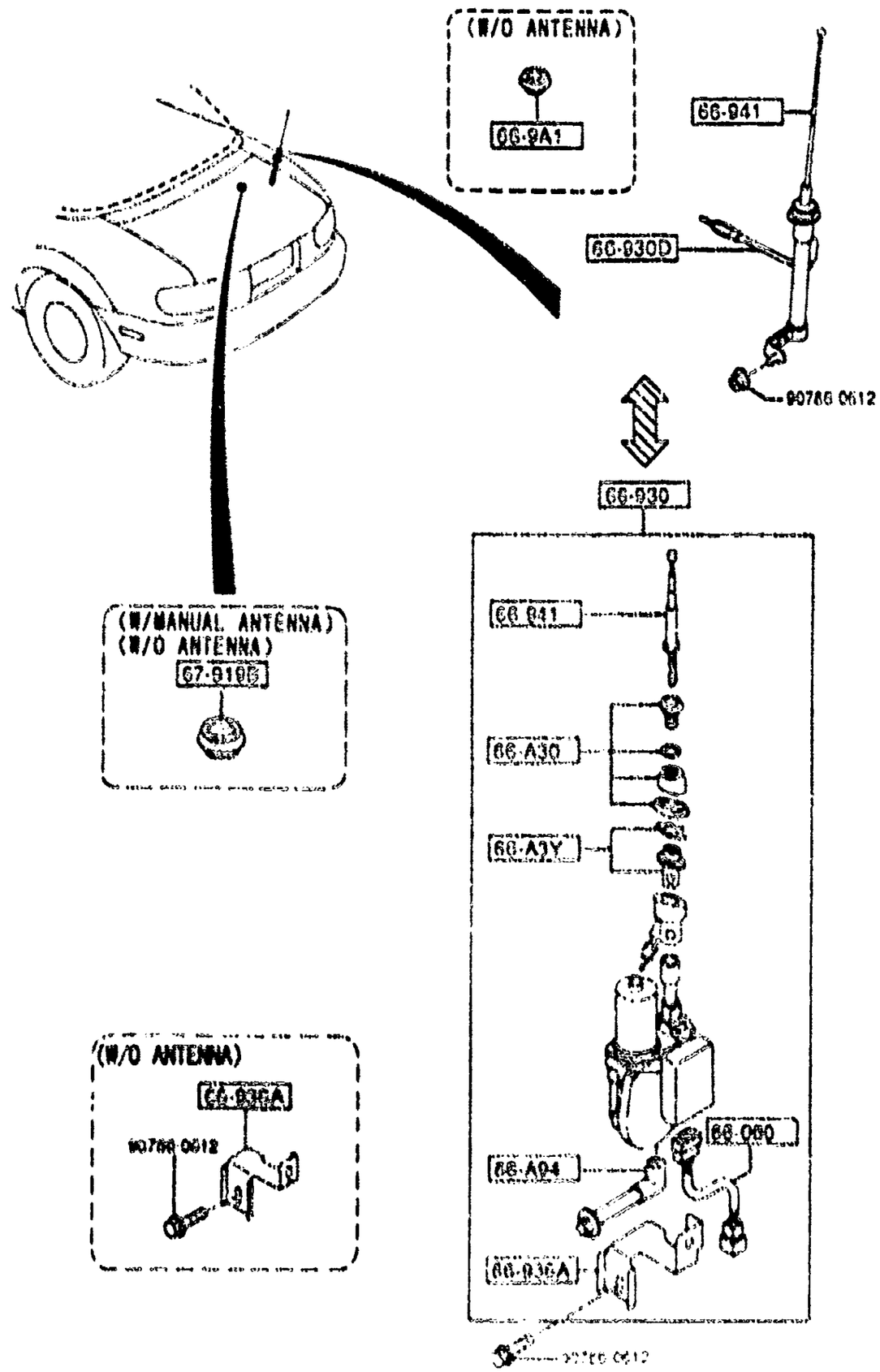
(W/O ANTENNA)
66-9A1
66-941
66-930D
99786-0612
66-930
(W/MANUAL ANTENNA)
(W/O ANTENNA)
67-910B
66-941
66-A30
66-A2Y
66-000
66-A04
66-936A
(W/O ANTENNA)
66-936A
99786-0612

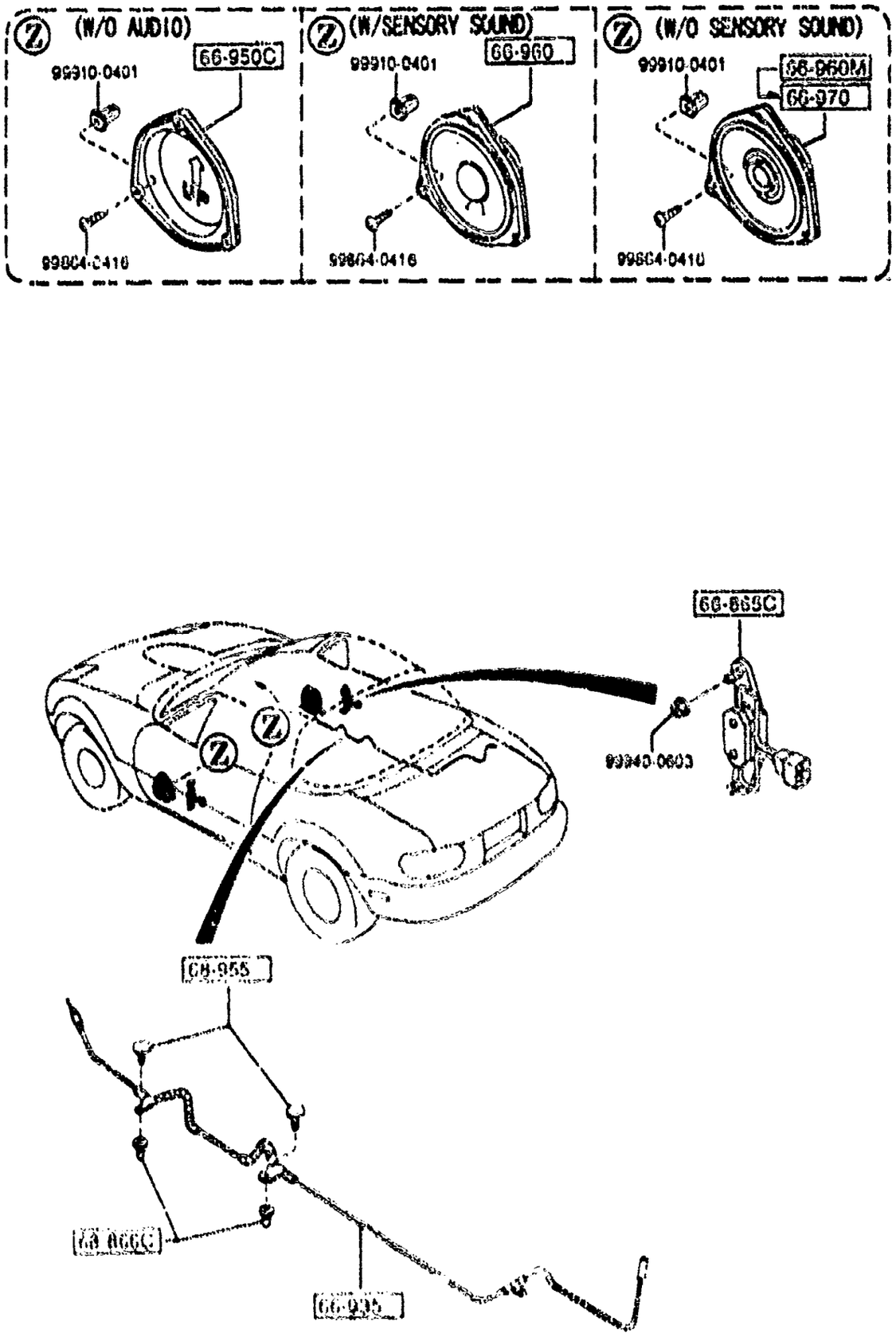

PART NO.	QTY	MODEL/RESTRICTION	MODEL/RESTRICTION	MODEL/RESTRICTION	FROM-TO
66-A3Y		PLATE,EARTH-MOTOR ANTENNA			
*N007-66-A3Z	1	PKG-B, PKG-C, (W/ELECT.ANTENNA)			4601-
66-A30		NUT,MOUNTING-ANTENNA			
*N007-66-A9Y	1	PKG-B, PKG-C, (W/ELECT.ANTENNA)			4601-
66-A94		PIPE,DRAIN-ANTENNA			
*N007-66-A90	1	PKG-B, PKG-C, (W/ELECT.ANTENNA)			4601-
66-080		CORD			
*N007-66-D10	1	PKG-B, PKG-C, (W/ELECT.ANTENNA)			4601-
66-865C		SUPPRESSOR,IG.			
N018-66-991A	2	(W/SENSORY SOUND)			
66-9A1		COVER,HOLE-ANTENNA			
FB01-66-9A1A	1	(W/O ANTENNA)			
66-930		ANTENNA,RADIO			
N007-66-930A	1	PKG-B, PKG-C, (W/ELECT.ANTENNA)			
56-930D		BODY,LOW-RADIO ANTENNA			
NA01-66-A3XA	1	BASE, PKG-A, PKG-R, (W/MANUAL ANTENNA)			
66-955		FEEDER-ANTENNA			
NA01-66-940C	1				
66-936A		BRKT,MOTOR-ANTENNA			
N007-66-A9X	1	PKG-B, PKG-C, (W/ELECT.ANTENNA) (W/O ANTENNA)			
66-941		POLE,ANTENNA			
N001-66-A30	1	BASE, PKG-A, PKG-R, (W/MANUAL ANTENNA)			
*N007-66-A3X	1	PKG-B, PKG-C, (W/ELECT.ANTENNA)			4601-

4601 NA3***-519089

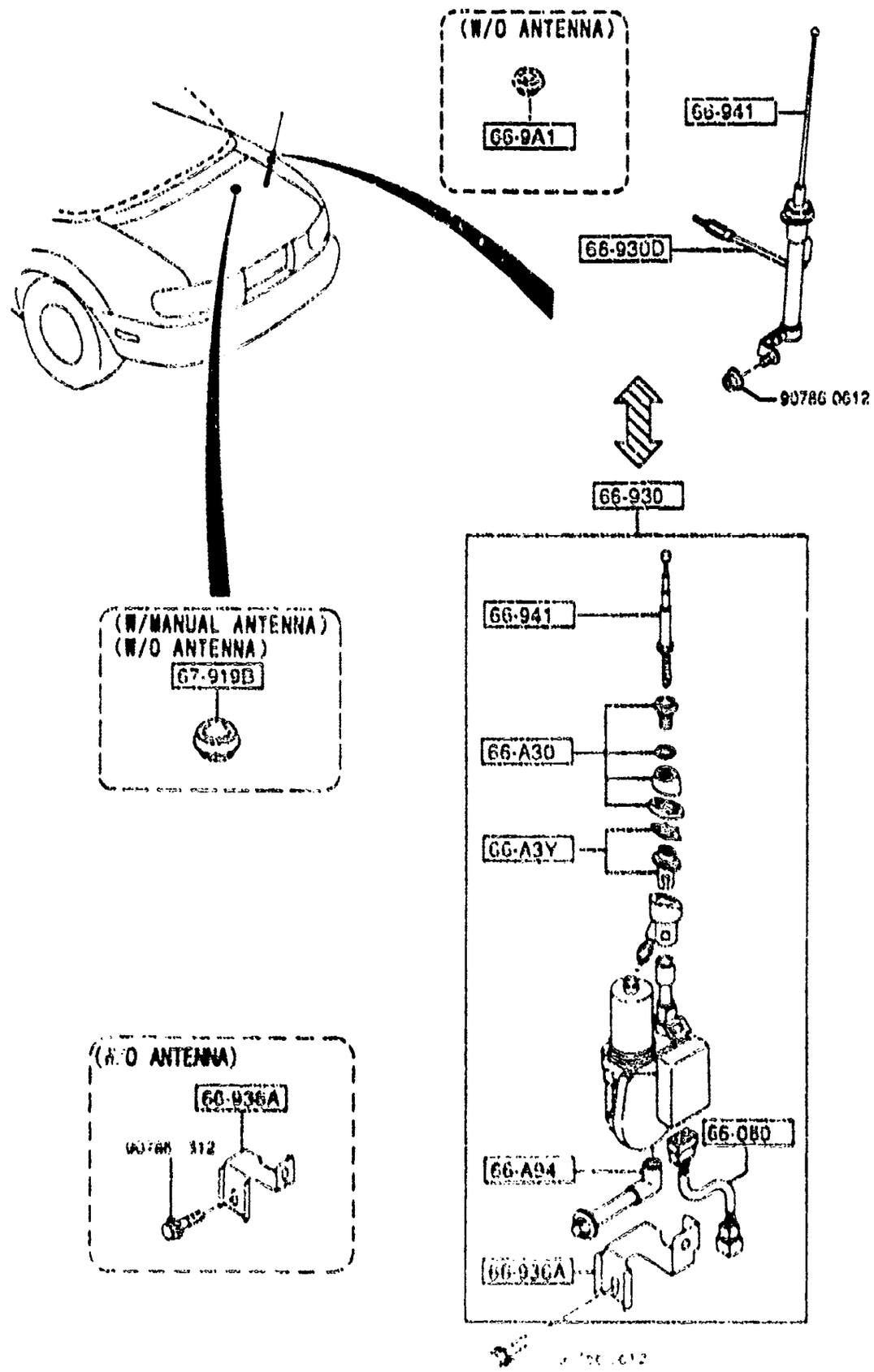

PART NO.	QTY	MODEL/RESTRICTION	MODEL/RESTRICTION	MODEL/RESTRICTION	FROM-TO
66-950C		BRACKET,LOUD SPEAKER			
NA01-66-9B0A	2	(W/O AUDIO)			
66-960		SPEAKER,LOUD-FRONT			
N018-66-960A	2	(W/SENSORY SOUND)			
66-960M		SPEAKER,LOUD-DOOR			
NA03-66-96X	2	(W/O SENSORY SOUND)			-3B16
66-970		SPEAKER,LOUD-REAR			
B01F-66-960	2	(W/O SENSORY SOUND)			3B16-
67-919B		GROMMET			
N007-67-011	1	BASE, PKG-A, PKG-R, (W/MANUAL ANTENNA) (W/O ANTENNA)			
68-866C		FASTENER,SEAL			
B235-68-865A	2				
68-955		FASTENER,LIFT GATE T RIM			
GJ37-68-955	2				
00	INT-	NA3 NA5 NA4 NA6 BLACK			

3B16 NA3****-506855

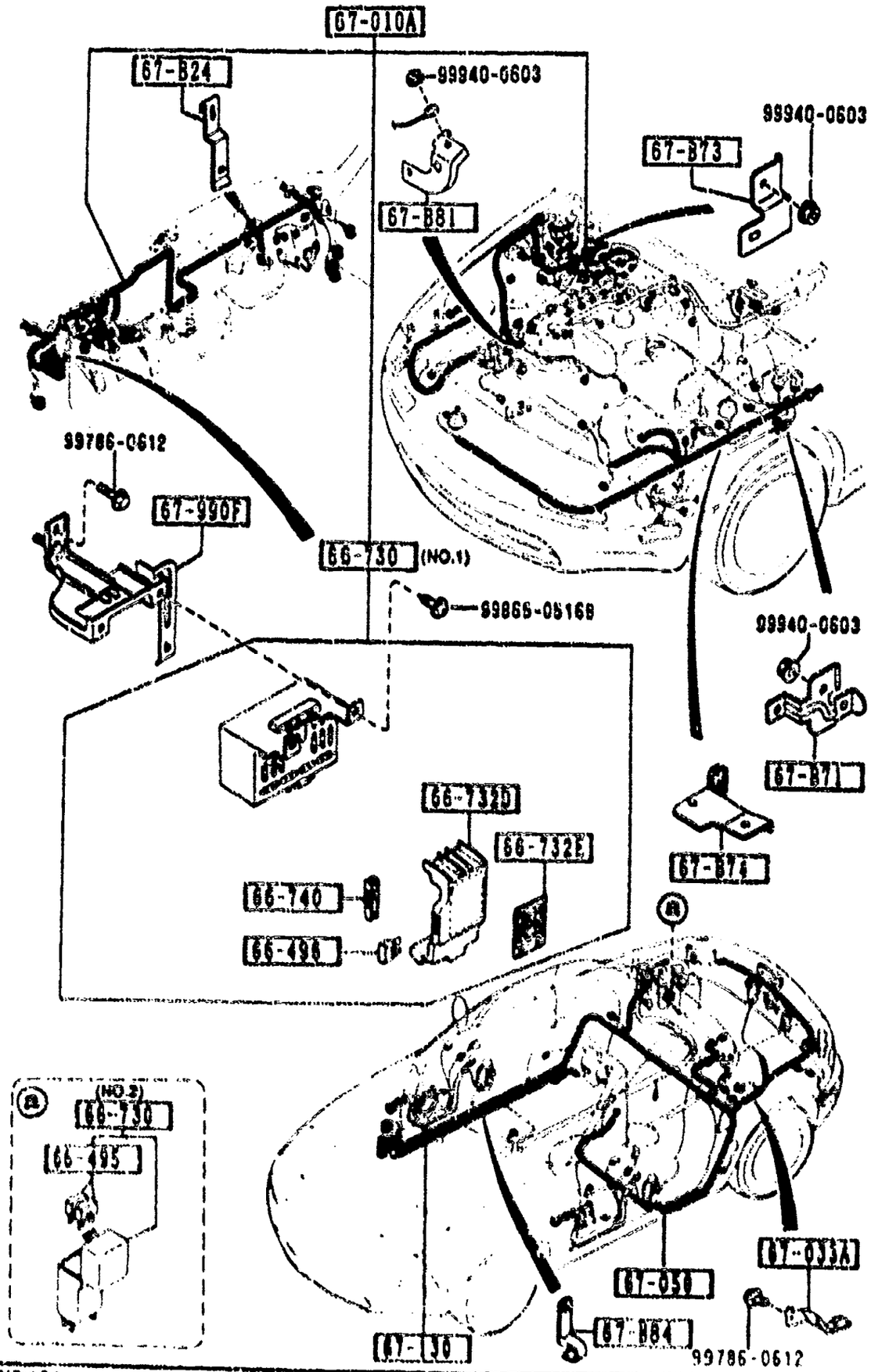

AUNA04

PART NO.	QTY	MODEL/RESTRICTION	MODEL/RESTRICTION	MODEL/RESTRICTION	FROM-TO
66-495		FUSE(10A)			
99705-1110	2				
66-496		FUSE(15A)			
99705-1115	1	(W/AIR BAG-DRIV.&PAS S.SIDE)			
66-730		BLOCK,FUSE			
NA75-66-730	1	(ILLUST. NO.1) (W/AIR BAG-DRIV.&PAS S.SIDE)			
N008-66-730	1	(ILLUST. NO.2)			
66-732D		COVER,FUSE BLOCK			
NA01-66-731A	1	FURUKAWA (W/AIR BAG-DRIV.&PAS S.SIDE)			
66-732E		LABEL,CAUTION-FUSE C OVER			
NA75-66-732	1	(W/AIR BAG-DRIV.&PAS S.SIDE)			
66-740		HOLDER,FUSE			
K001-66-739	1	(W/AIR BAG-DRIV.&PAS S.SIDE)			
67-B24		BRACKET			
NA75-67-B11 AN(NA75-67-B11A)	1				-4401
NA75-67-B11A	1				4401-
67-B72		BRACKET,HARNESS			
NA05-67-BW1A	1				
67-B73		BRACKET,HARNESS			
NA05-67-BW2	1				
67-B74		BRACKET,HARNESS			
N018-67-BW0	1				
67-B81		BRACKET,HARNESS-ENGI NE			
NA75-67-B81	1				

4401 NA3###-517816

CAT AUNA04-03

1995-04

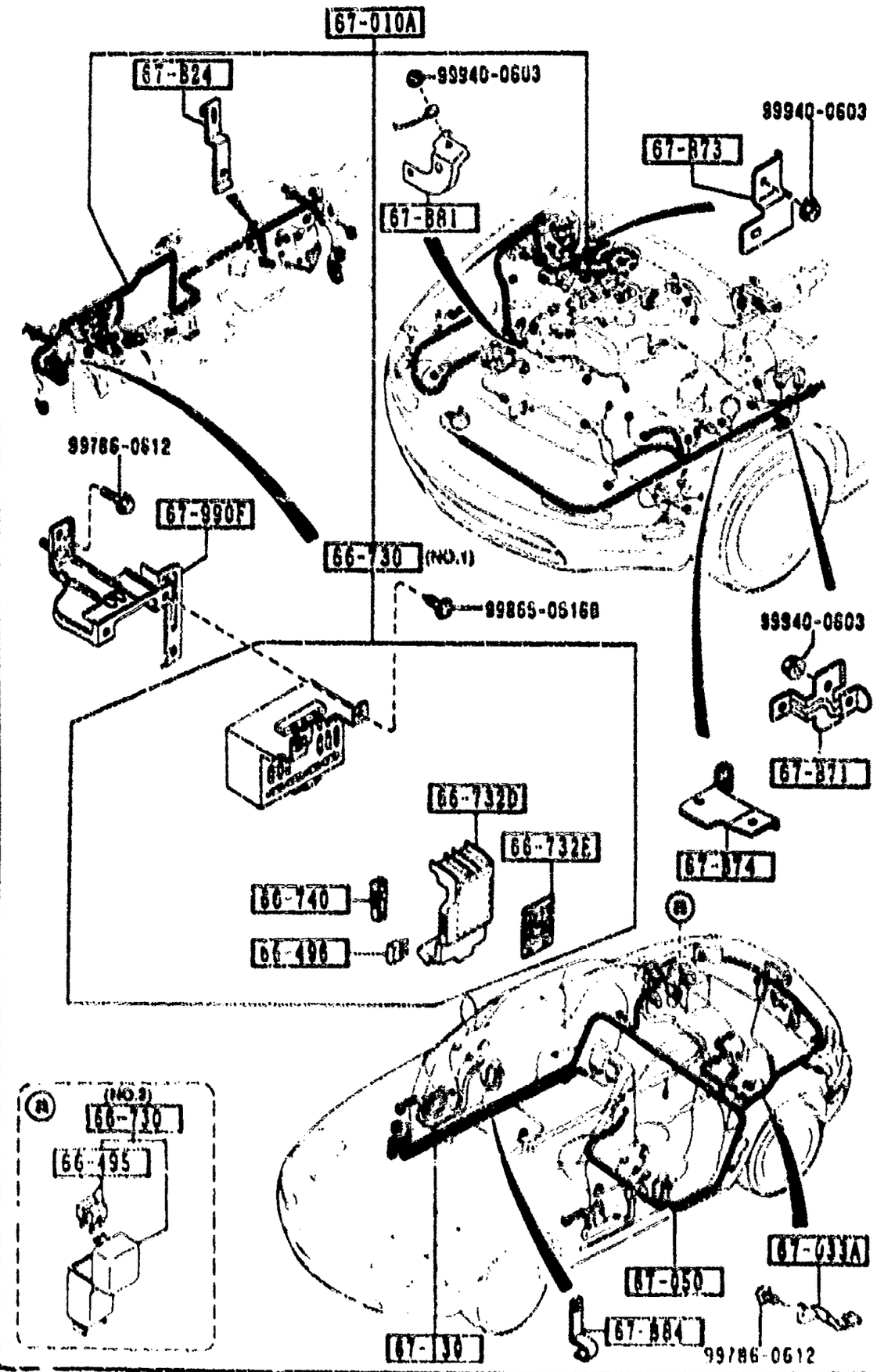

PART NO.	QTY	MODEL/RESTRICTION	MODEL/RESTRICTION	MODEL/RESTRICTION	FROM-TO
67-B84		BRACKET			
NA75-67-B12	1				
67-010A		HARNESS,FRONT			
NA81-67-010D	1	(W/AIR BAG-DRIV.&PASS.SIDE) ((AT)>(W/O A.LOCK BRAKE))			
NA82-67-010D	1	(W/AIR BAG-DRIV.&PASS.SIDE) ((AT)>(A.LOCK BRAKE))			
NA75-67-010D A (NA75-67-010E)	1				-3C01
NA80-67-010D A (NA80-67-010E)	1				-3C01
NA75-67-010E	1	(W/AIR BAG-DRIV.&PASS.SIDE) ((MT)>(W/O A.LOCK BRAKE))			3C01-
NA80-67-010E	1	(W/AIR BAG-DRIV.&PASS.SIDE) ((MT)>(A.LOCK BRAKE))			3C01-
67-033A		BRACKET,WIRING			
N007-67-B10A	1				
67-050		HARNESS,REAR			
NA75-67-050C	1	(W/O A.LOCK BRAKE)			
NA80-67-050C	1	(A.LOCK BRAKE)			
67-130		HARNESS'NO.2',FRONT			
NA80-67-110C A (NA80-67-110E)	1				-4106
NA82-67-110C A (NA82-67-110E)	1				-4106
NA80-67-110E	1	(W/O A.LOCK BRAKE)			4106-
NA82-67-110E	1	(A.LOCK BRAKE)			4106-
67-990F		BRACKET,HARNESS			
NA01-67-BJ0	1				

3C01 NA5W##-507607
4106 NA5W##-509503

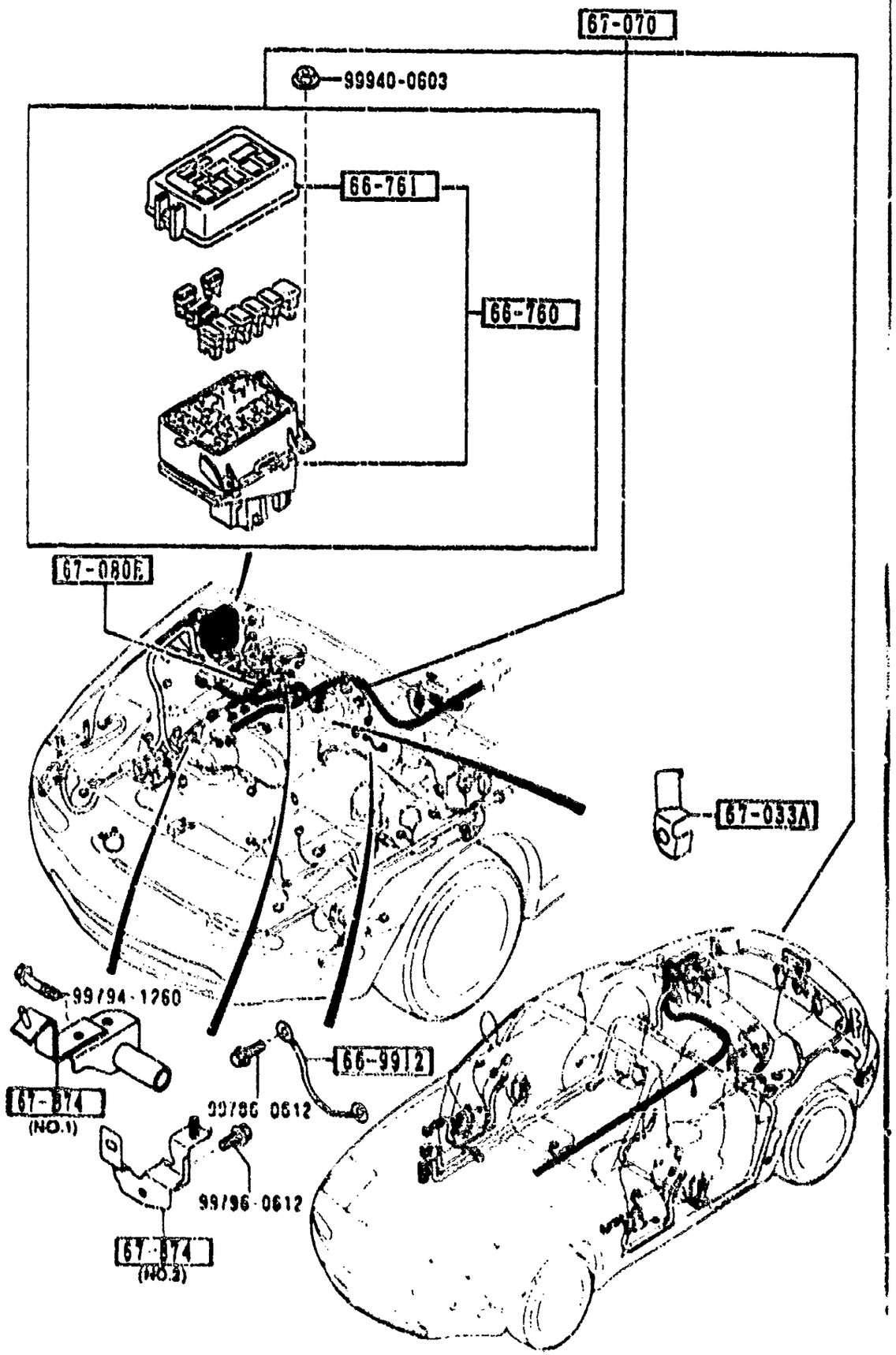

PART NO.	QTY	MODEL/RESTRICTION	MODEL/RESTRICTION	MODEL/RESTRICTION	FROM-TO
66-760		BLOCK,MAIN FUSE			
NA80-66-760	1				
66-761		COVER,MAIN FUSE BLOC K			
NA80-66-762	1				
66-9912		WIRE,EARTH			
NA75-67-EW1B	1				
67-874		BRACKET,HARNESS			
NA80-67-880	1	(ILLUST. NO.1)			
N027-67-880	1	(ILLUST. NO.2)			
67-033A		BRACKET,WIRING			
NA01-67-810B	1				
67-070		HARNESS,ENGINE			
NA80-67-070C	1	((MT)>(A.LOCK BRAKE))			
NA82-67-070C	1	((AT)>(A.LOCK BRAKE))			
NA75-67-070C AN(NA75-67-070D)	1				-3A25
NA81-67-070C AN(NA81-67-070D)	1				-3A25
NA75-67-070D	1	((MT)>(W/O A.LOCK BR AKE))			3A25-
NA81-67-070D	1	((AT)>(W/O A.LOCK BR AKE))			3A25-
67-080E		WIRING,INJECTOR			
NA75-67-080B A (NA75-67-080C)	1				-4601
*NA75-67-080C	1				4601-

3A25 NA3***-505655
4601 NA3***-519089

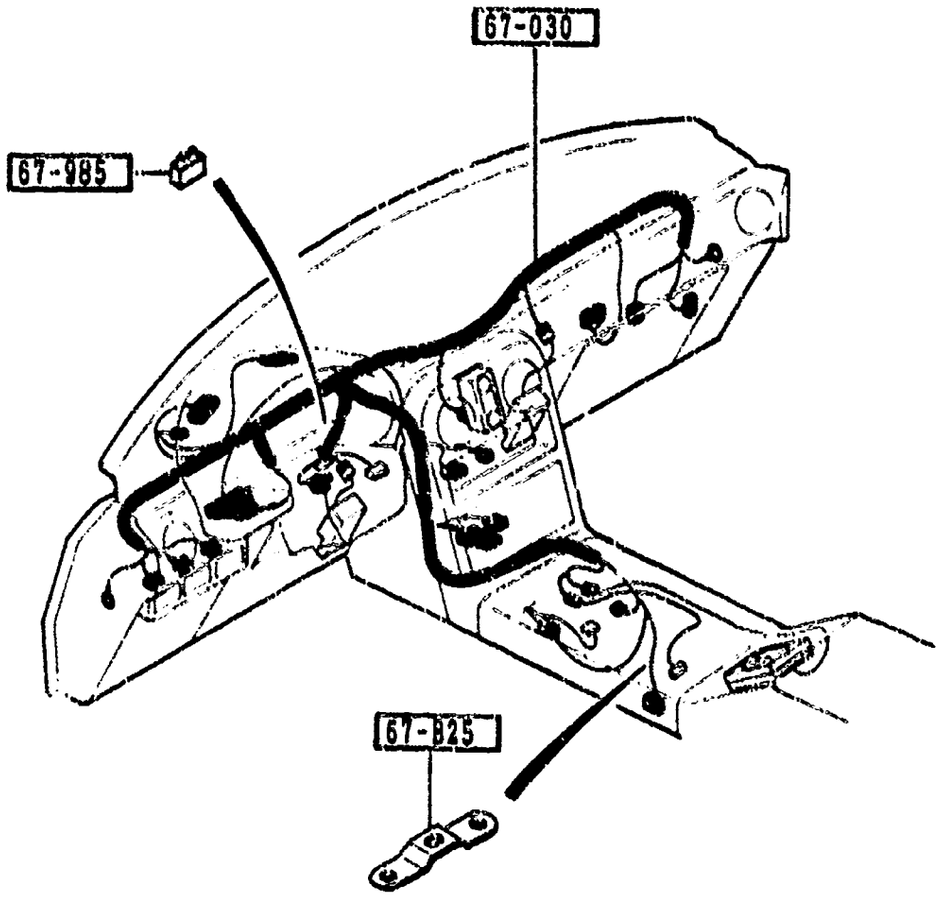

PART NO.	QTY	MODEL/RESTRICTION	MODEL/RESTRICTION	MODEL/RESTRICTION	FROM-TO
67-B25		BRACKET,HARNESS			
NA01-67-B31	1				
67-030		HARNESS,INSTRUMENT			
NA75-67-030C AN(NA75-67-030D)	1				-4106
NA80-67-030C AN(NA80-67-030D)	1				-4106
NA81 67-030C AN(NA81-67-030D)	1				-4106
NA82-67-030C AN(NA82-67-030D)	1				-4106
NA75-67-030D	1	(W/O SENSORY SOUND) (MT)			4106-
NA80-67-030D	1	(W/SENSORY SOUND) (MT)			4106-
NA81-67-030D	1	(W/O SENSORY SOUND) (AT)			4106-
NA82-67-030D	1	(W/SENSORY SOUND) (AT)			4106-
67-985		CONNECTOR,SHORT			
NA80-67-SC0	1	(USA)			

4106 NA3###-509503

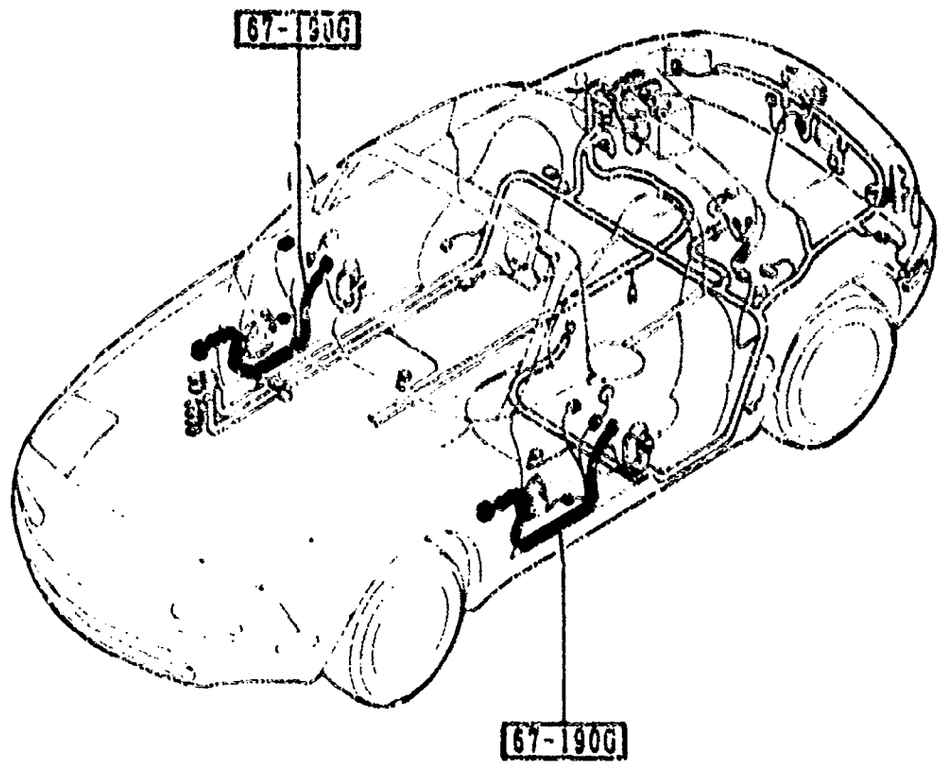

PART NO.	QTY	MODEL/RESTRICTION	MODEL/RESTRICTION	MODEL/RESTRICTION	FROM-TO
67-190G		HARNESS,DOOR			
NA01-67-190A	2	BASE, (DR MIRROR MANUAL,W/O SENSORY SOUND,W/O P.WIND.)			
NA02-67-190A	2	RICO-OPT-PKG, (DR MIRROR MANUAL,W/O SENSORY SOUND,W/P.WIND.)			
NA52-67-190B	2	(DR MIRROR MANUAL,W/SENSORY S.)			
NA53-67-190A	2	PKG-A, PKG-B, PKG-C, (DR MIRROR ELECT,W/O SENSORY S.)			
NA54-67-190B ^ (NA54-67-190C)	2				-3901
NA54-67-190C	2	PKG-B-OPT, PKG-C-OPT, (DR MIRROR ELECT,W/SENSORY S.)			3901-

3901 NA3***-S02360

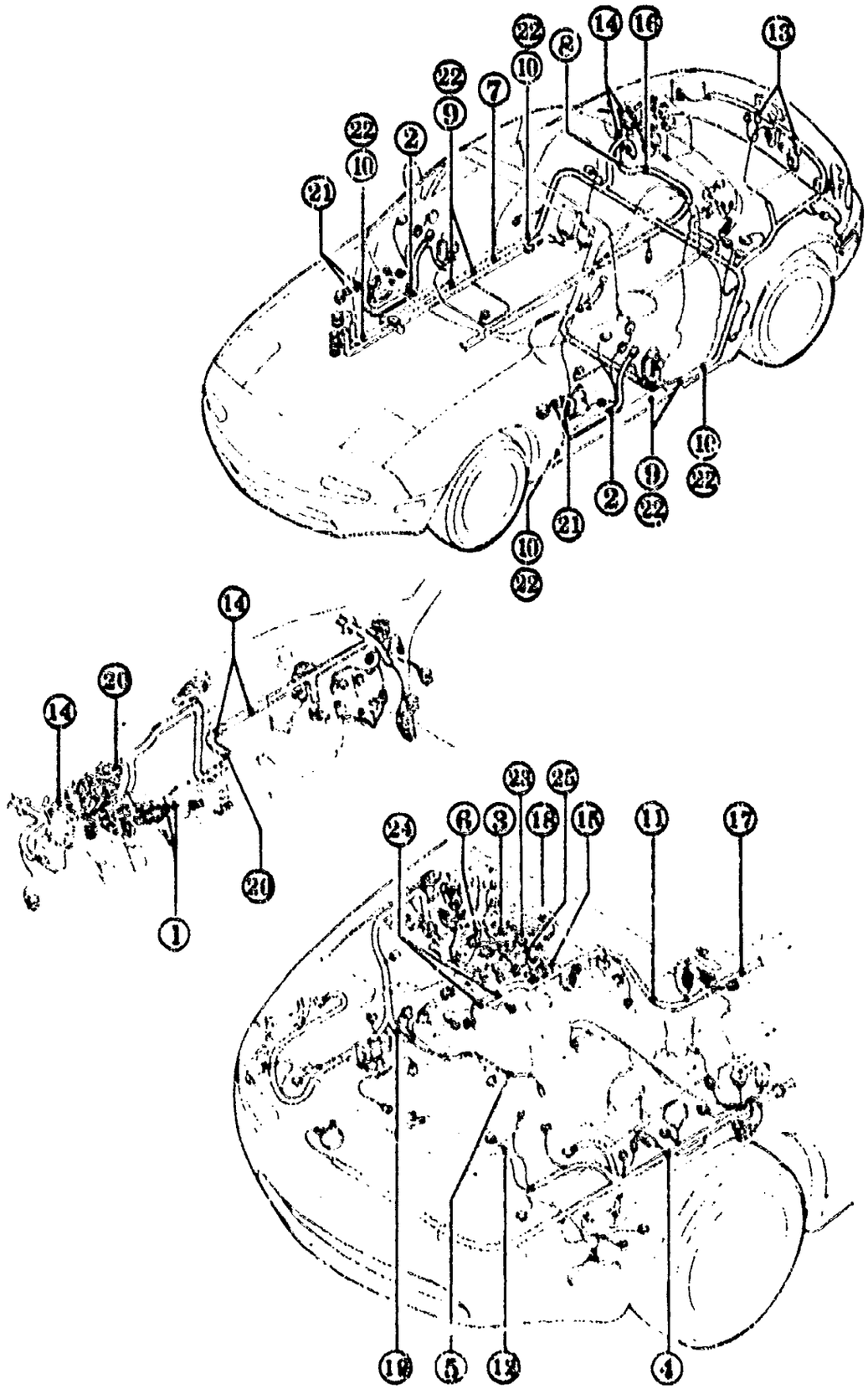

AUNA04

① 14-726	② 45-941B	③ 67-CS1 99786-0612	④ 67-CT2	⑤ 67-011C
⑥ 67-013A	⑦ 67-013D	⑧ 67-014F 99786-0620	⑨ 67-022	⑩ 67-026
⑪ 67-048A 99786-0612	⑫ 67-051E	⑬ 67-051J	⑭ 67-052H	⑮ 67-062B 99786-0612
⑯ 67-072H 99786-0620	⑰ 67-073 90845-0612	⑱ 67-073B 99940-0603	⑲ 67-074 99786-0612	⑳ 67-076
㉑ 67-191	㉒ 68-865	㉓ 26-C10	㉔ 34-C10	㉕ 63-941A

AUNA04

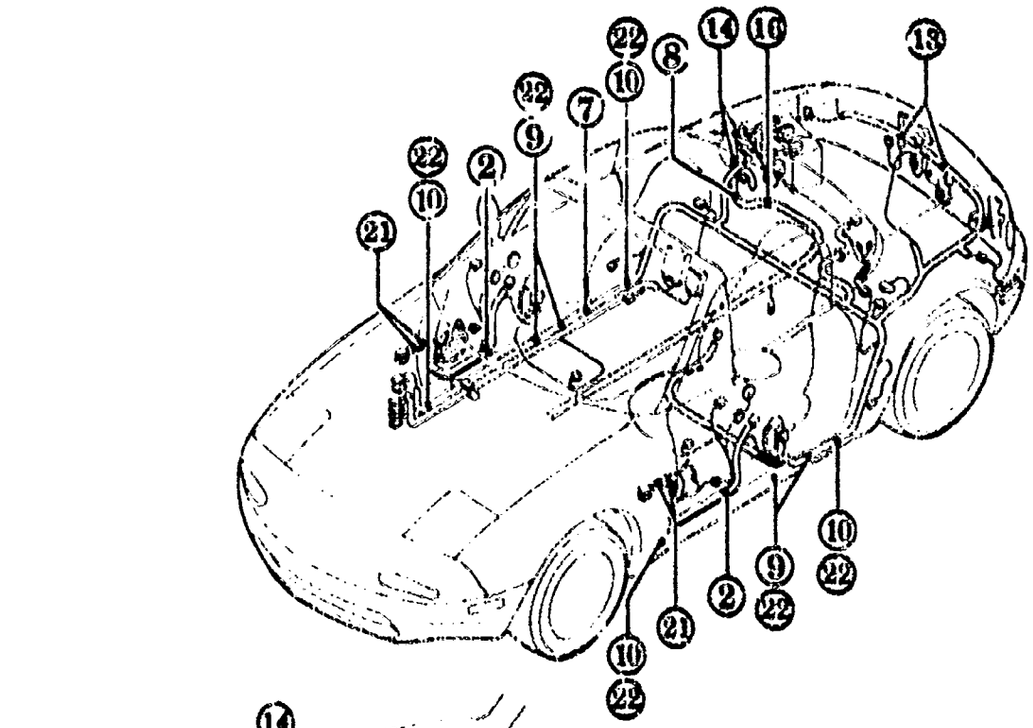

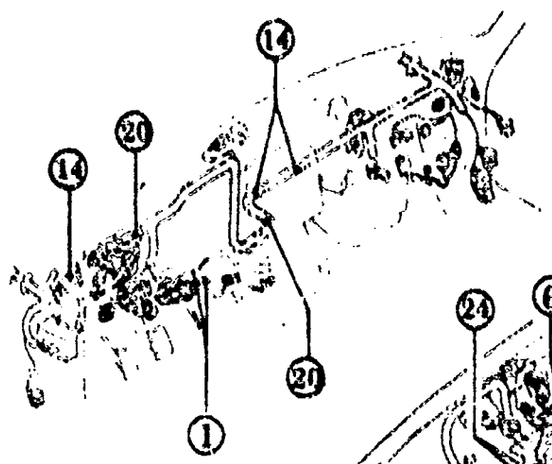

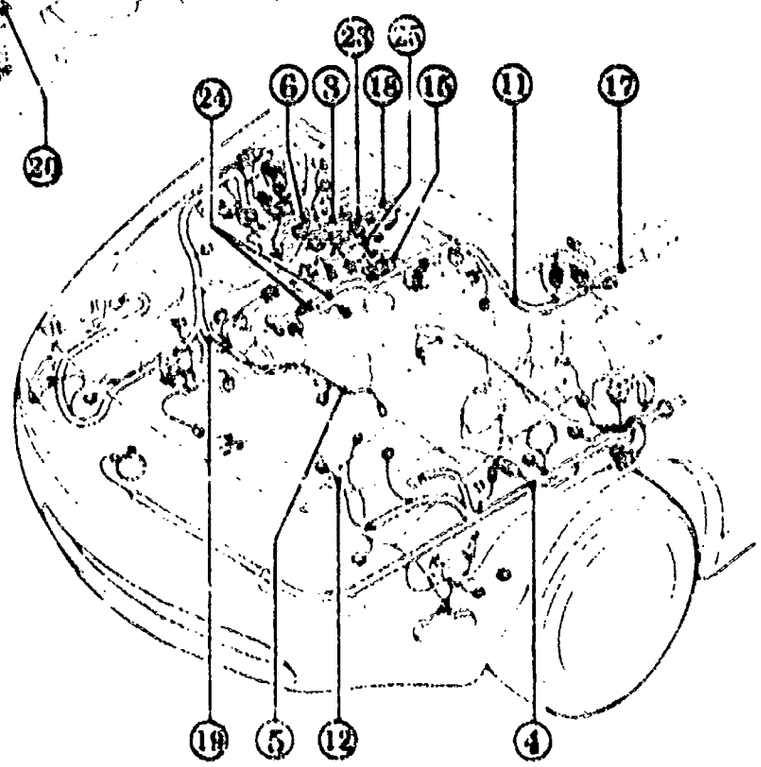

PART NO.	Q'TY	MODEL/RESTRICTION	MODEL/RESTRICTION	MODEL/RESTRICTION	FROM-TO
14-726		BAND			
N304-14-726	2				
28-C10		BAND,PIPE			
B214-28-C10	1				
34-C10		BAND,PIPE			
B214-34-C10	2				
45-961B		CAP			
H002-45-961	2				
66-941A		CLIP			
FB01-66-945	1				
67-CS1		CLIP,HARNESS			
N001-67-CS1C	1				
67-CT2		CLIP,HARNESS			
NA01-67-CH5	1				
67-011C		CLIP			
E356-10-141	1	BASE, (W/O POWER STEERING)			
67-013A		CLIP			
UB42-67-013	1	(W/O A.LOCK BRAKE)			
67-013D		PROTECTOR,HARNESS			
NA01-67-P54	1				-4509
NA75-67-P54	1				4509-
67-014F		PROTECTOR,HARNESS			
NA01-67-P71	1				
67-022		CLIP,HARNESS			
NA01-67-CW5A	4				
67-026		CLIP,HARNESS			
NA02-67-CW5A	4				

4509 NA3mm-518031

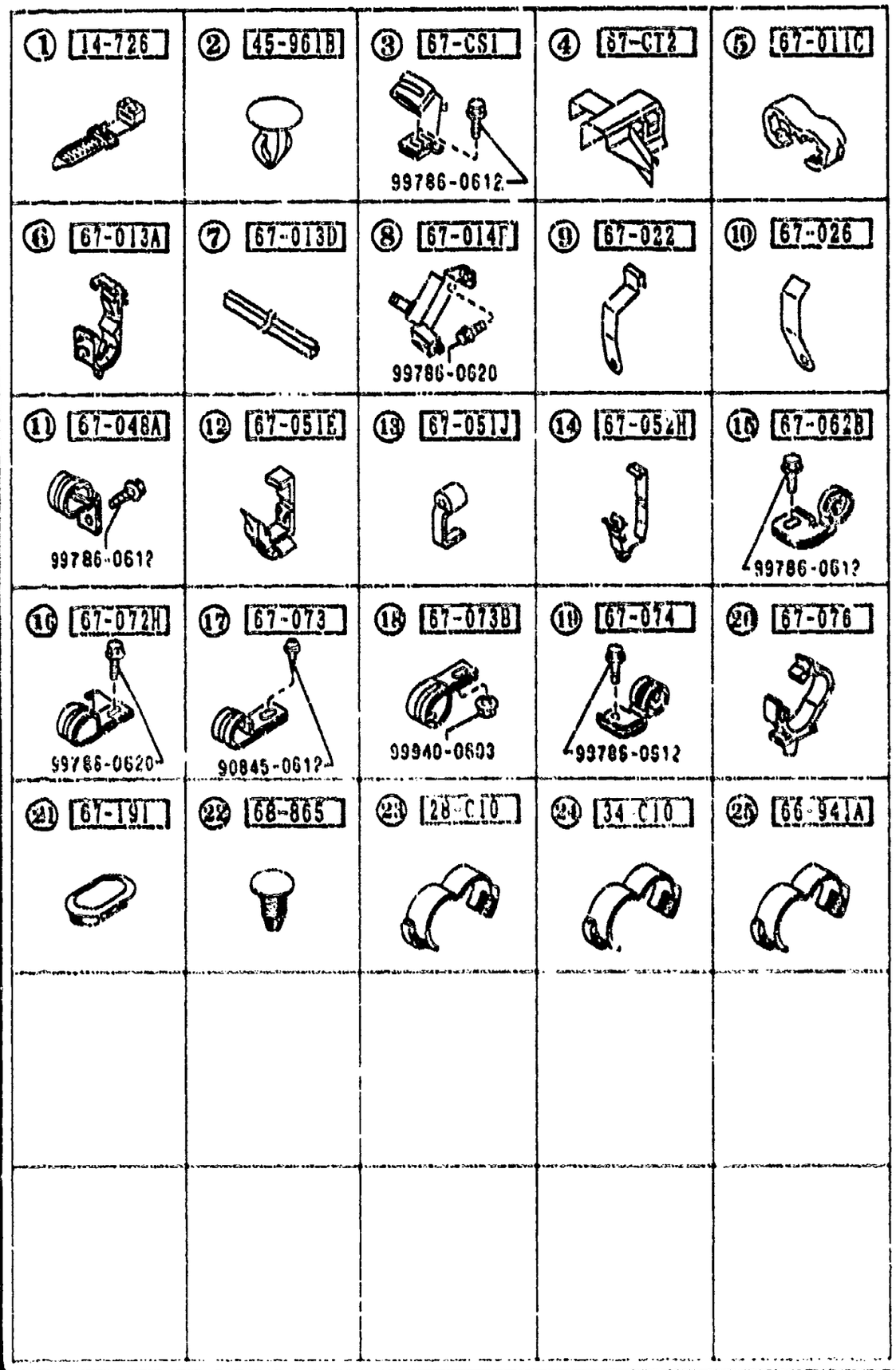

PART NO.	QTY	MODEL/RESTRICTION	MODEL/RESTRICTION	MODEL/RESTRICTION	FROM-TO
67-048A NA01-67-CS1	1	CLIP,HARNESS			
67-051E UB42-67-051	1	CLIP			
67-051J G031-67-053A	2	CLIP			
67-052H G030-67-018A	5	CLIP			
67-062B NA02-67-CS1A	1	CLIP,HARNESS			
67-072H NA01-67-CS6	1	CLIP,ENGINE HARNESS			
67-073 UB73-67-073A	1	CLIP			
67-073B H261-67-073	1	CLIP			
67-074 NA01-67-CS5	1	CLIP,HARNESS			
67-076 NA01-67-CH8	2	CLIP,ENGINE HARNESS			
67-191 B200-67-HD1	4	GROMMET			
68-865 B003-68-865	8	FASTENER			
00	INT-	NA3 NA5 NA4 NA6 BLACK			

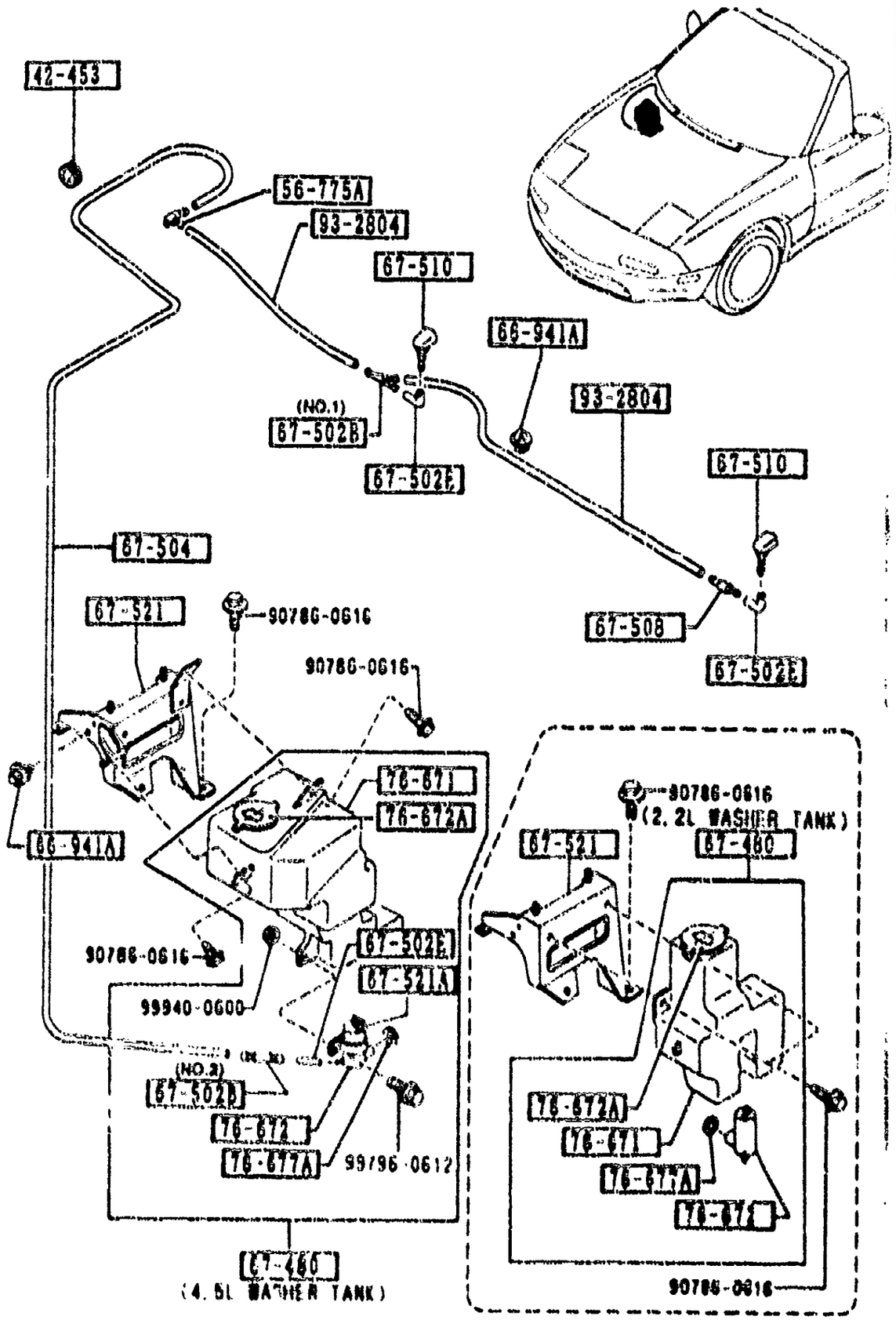

PART NO	QTY	MODEL/RESTRICTION	MODEL/RESTRICTION	MODEL/RESTRICTION	FROM-TO
42-453		PROTECTOR,CABLE			
B04A-42-453	1				
56-775A		CLIP,WASHER HOSE			
LA01-67-505B	1				
66-941A		CLIP			
GB08-66-941	4				
67-480		TANK,WASHER-FRONT			
NA01-67-480A	1	(2.2L WASHER TANK)			
NA04-67-480B	1	(4.5L WASHER TANK)			
67-502B		JOINT,HOSE			
H001-67-502	1	(ILLUST. NO.1)			
4116-67-502	1	(ILLUST. NO.2) (4.5L WASHER TANK)			
67-502E		JOINT,ELBOW-W.TANK			
5084-67-502	2	(2.2L WASHER TANK)			
5084-67-502	3	(4.5L WASHER TANK)			
67-504		HOSE"C",WASHER			
NA01-67-501A	1				
67-508		VALVE,CHECK			
FA54-67-508	1				
67-510		NOZZLE,WASHER-F.WIND			
NA01-67-510	2				
67-521		BRACKET,WASHER TANK			
NA01-67-520	1	(2.2L WASHER TANK)			
NA04-67-520	1	(4.5L WASHER TANK)			
67-521A		BRACKET			
5095-67-521	1	(4.5L WASHER TANK)			
76-671		TANK,WASHER			
NA01-67-481	1	(2.2L WASHER TANK)			

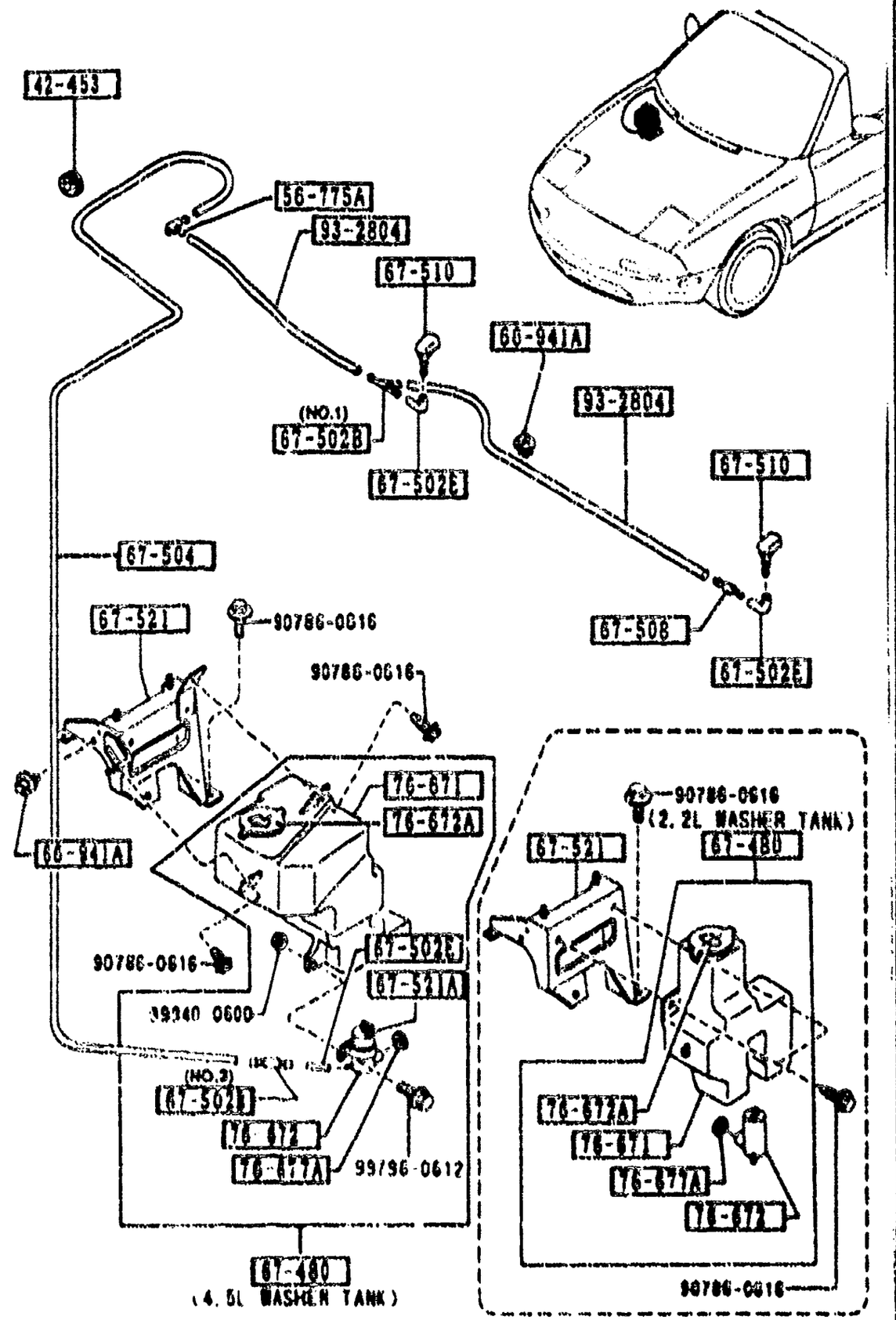

6720 -2 * WINDSHIELD WASHER
(W/O ANTI LOCK BRAKE SYSTEM)

PART NO	QTY	MODEL/RESTRICTION	MODEL/RESTRICTION	MODEL/RESTRICTION	FROM-TO
CONT'D					
NA04-67-481	1	(4.5L WASHER TANK)			
76-672		PUMP,WASHER			
S004-76-672	1				
76-672A		CAP,TANK			
UB39-51-815	1				
76-677A		GROMMET,WASHER TANK			
S084-76-677	1				
93-2804		PIPE,VINYL			
99328-04010	1	L=10M			

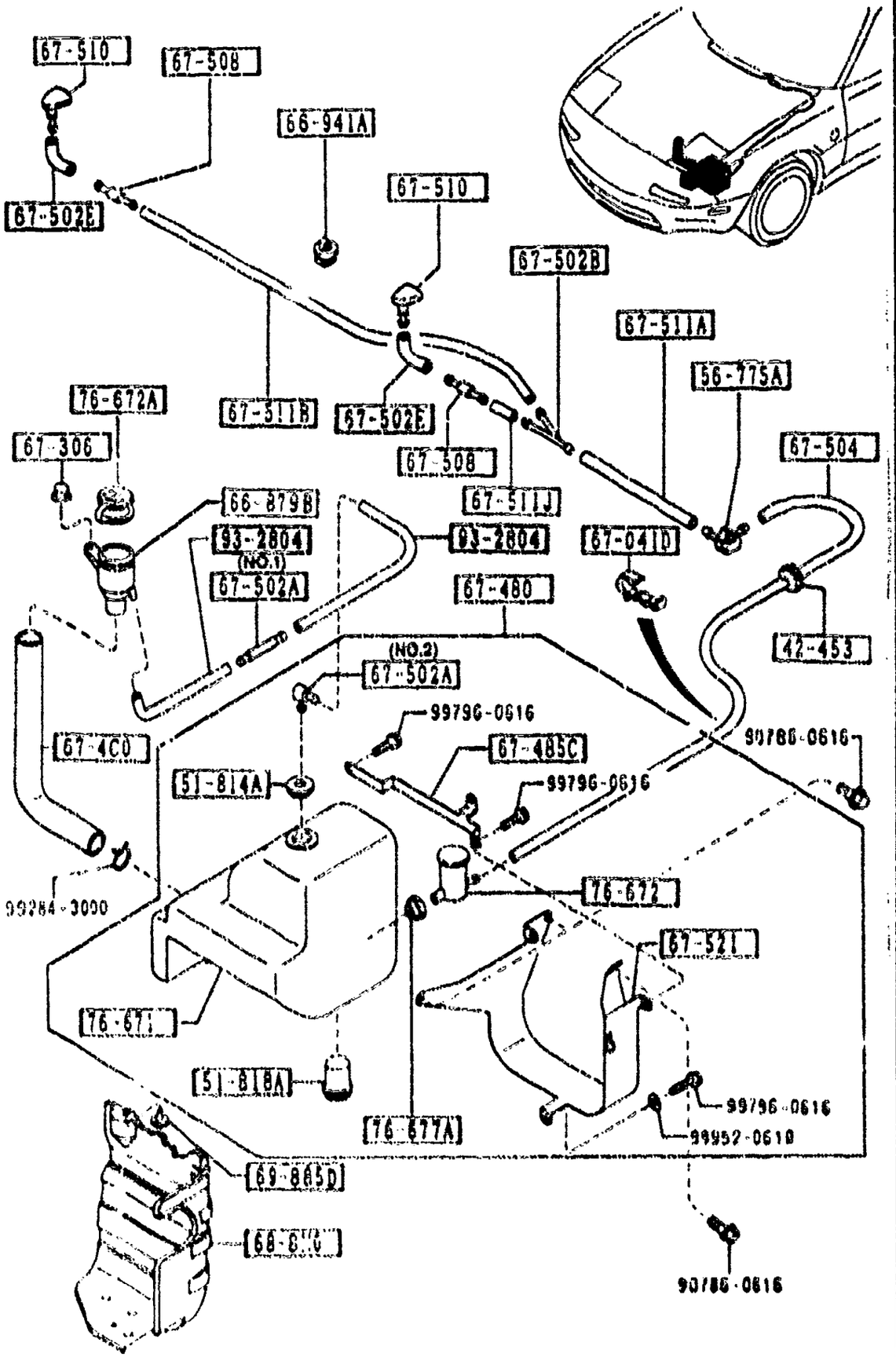

PART NO.	QTY	MODEL/RESTRICTION	MODEL/RESTRICTION	MODEL/RESTRICTION	FROM-TO
42-453		PROTECTOR,CABLE			
B048-42-453	1				
51-814A		GROMMET,WASHER TANK			
B002-51-814	1				
51-818A		SWITCH,LEVEL-WASHER TANK			
NA17-67-408	1				
56-775A		CLIP,WASHER HOSE			
LA01-67-505B	1				
66-879B		JOINT			
NA17-67-4C2	1				
66-941A		CLIP			
GB08-66-941	3				
67-041D		CLIP,HARNESS			
B092-67-041	1				
67-306		NUT,WIPER LINK			
GJ21-67-306	1				
67-4C0		PIPE,FILLER-F.WASHER TANK			
NA17-67-4C1	1				
67-480		TANK,WASHER-FRONT			
NA17-67-41GA	1				
67-485C		BRKT'A',WASHER TANK-FNT			
NA18-67-521	1				
67-502A		JOINT,HOSE			
NA17-67-502	1	(ILLUST. NO.1)			
5013-67-502	1	(ILLUST. NO.2)			
67-502B		JOINT,HOSE			
H001-67-502	1				

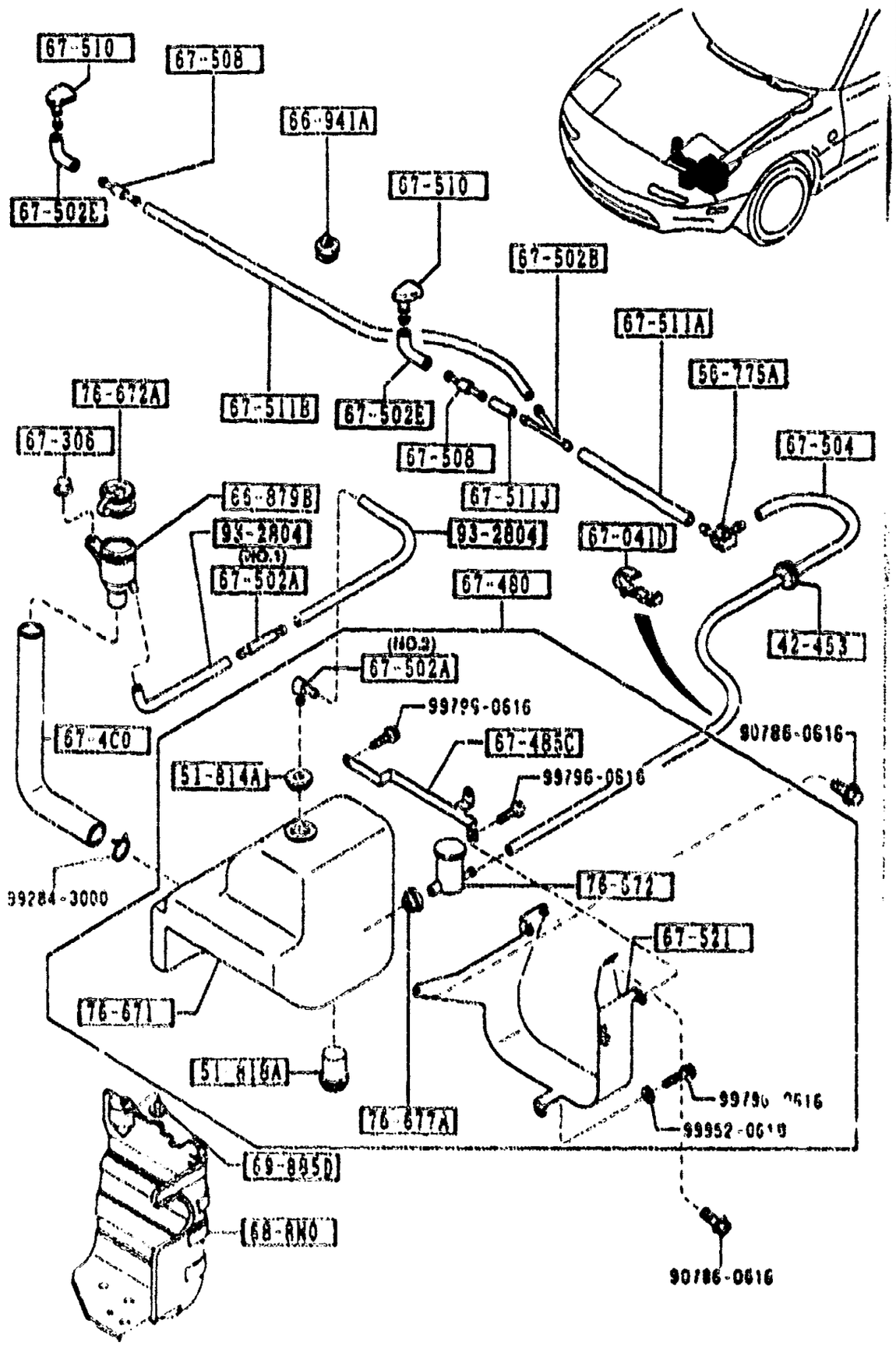

PART NO.	QTY	MODEL/RESTRICTION	MODEL/RESTRICTION	MODEL/RESTRICTION	FROM-TO
67-502E S084-67-502	2	JOINT,ELBOW-W.TANK			
67-504 NA17-67-501	1	HOSE'C',WASHER			
67-508 FA54-67-508	2	VALVE,CHECK			
67-510 NA01-67-510	2	NOZZLE,WASHER-F.WIND			
67-511A NA18-67-501	1	PIPE,SCREEN WASHER			
67-511B NA19-67-501	1	PIPE,SCREEN WASHER			
67-511J NA15-67-501	1	PIPE,SCREEN WASHER			
67-521 NA17-67-521	1	BRACKET,WASHER TANK			
68-8N0 NA20-56-181A	1	COVER,WASHER TANK			
69-885D NA01-56-145	3	FASTENER			
76-671 NA17-67-471	1	TANK,WASHER			
76-672 LA01-67-482	1	PUMP,WASHER			
76-672A [illegible]	1	CAP,TANK			
76-677A S084-76-677	1	GROMMET,WASHER TANK			

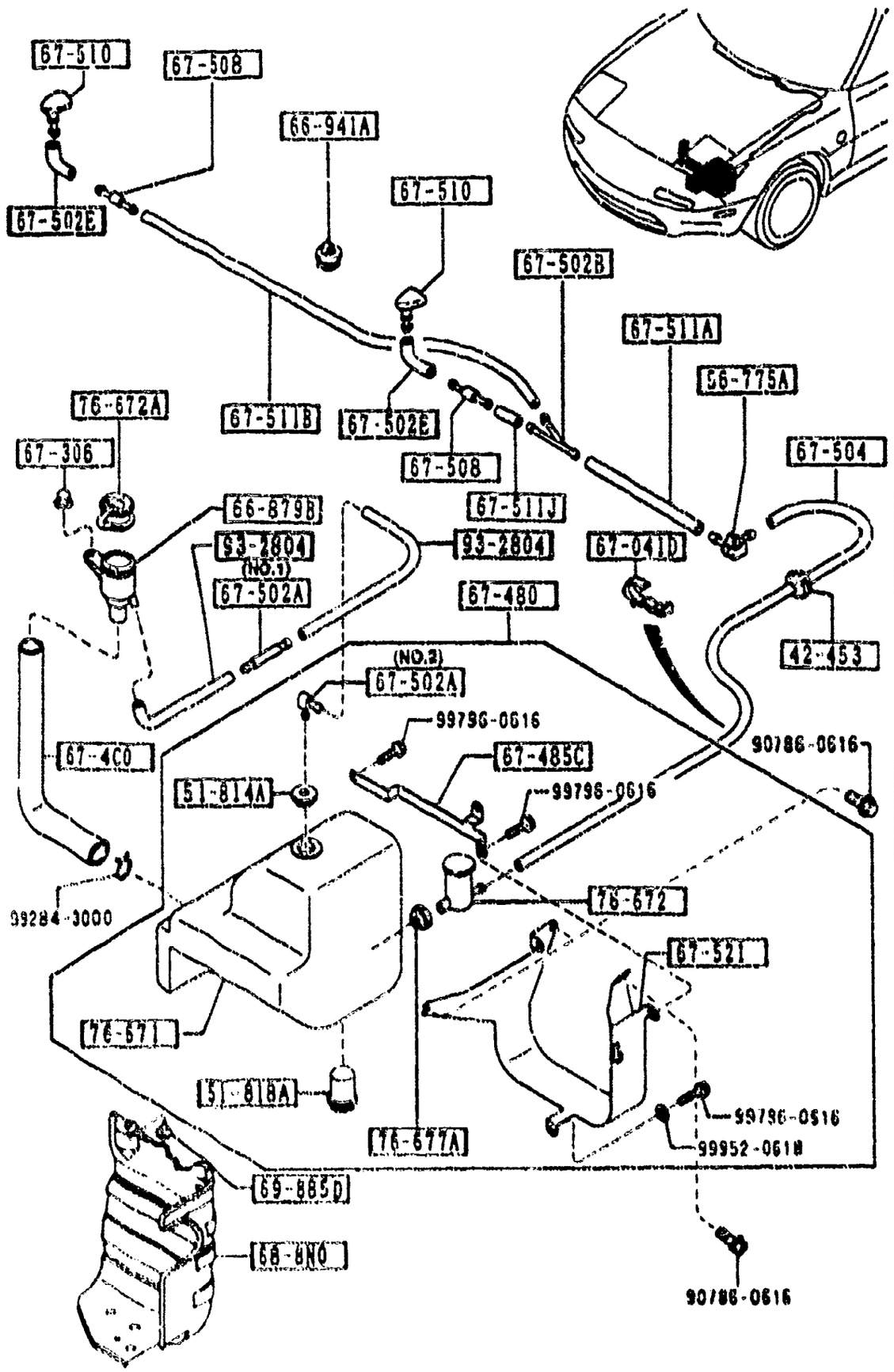

PART NO.	QTY	MODEL/RESTRICTION	MODEL/RESTRICTION	MODEL/RESTRICTION	FROM-TO
93-2804		PIPE,VINYL			
99328-04010	1	L=10M			

6730 -1 WINDSHIELD WIPERS

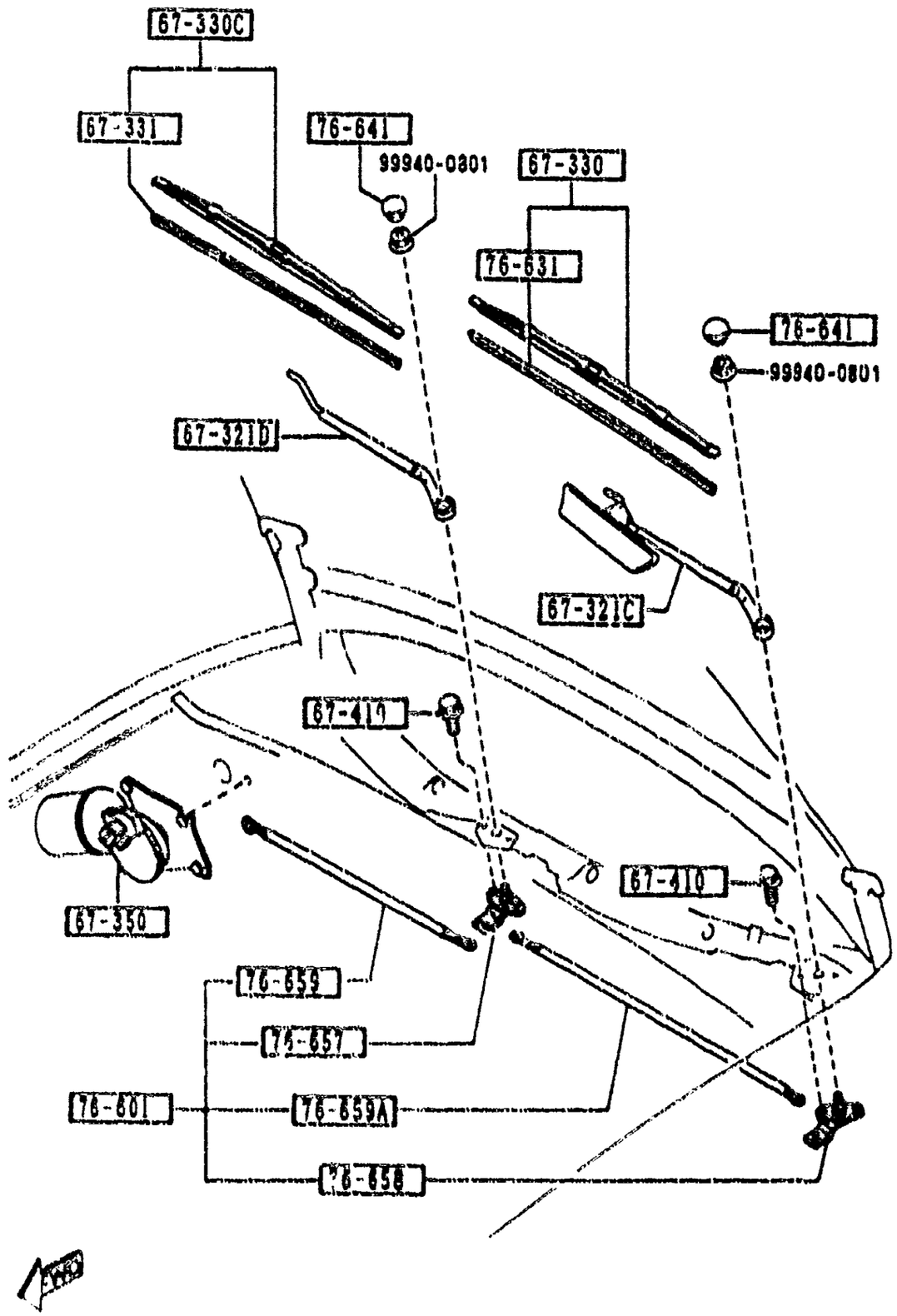

PART NO.	QTY	MODEL/RESTRICTION	MODEL/RESTRICTION	MODEL/RESTRICTION	FROM-TO
67-321C		ARM,WIPER-DRIVER SID E			
NA01-67-321	1				
67-321D		ARM,WIPER-CO DRIVER SIDE			
NA02-67-321	1				
67-330		BLADE,WIPER-FRONT			
BM90-67-330B	1				
67-330C		BLADE(R),WIPER-FRONT			
NA02-67-330A	1				
67-331		RUBBER,BLADE-FRONT			
N002-67-331	1				
67-350		MOTOR,WIPER			
NA01-67-340B	1	(EXC.COLD SPEC)			
NA04-67-340A	1	(COLD SPEC)			
67-410		BOLT			
B455-67-369	4				
76-601		LINK,WIPER			
NA01-67-360A	1				
76-631		RUBBER,BLADE-FRONT			
D041-67-331	1				
76-641		COVER,WIPER ARM-FRON T			
LA01-67-395A	2				
76-657		SHAFT,DRIVE NO.1			
NA01-67-363	1				
76-658		SHAFT,DRIVE NO.2			
NA01-67-364	1				
76-659		ARM NO.1,LINK			
NA01-67-361	1				

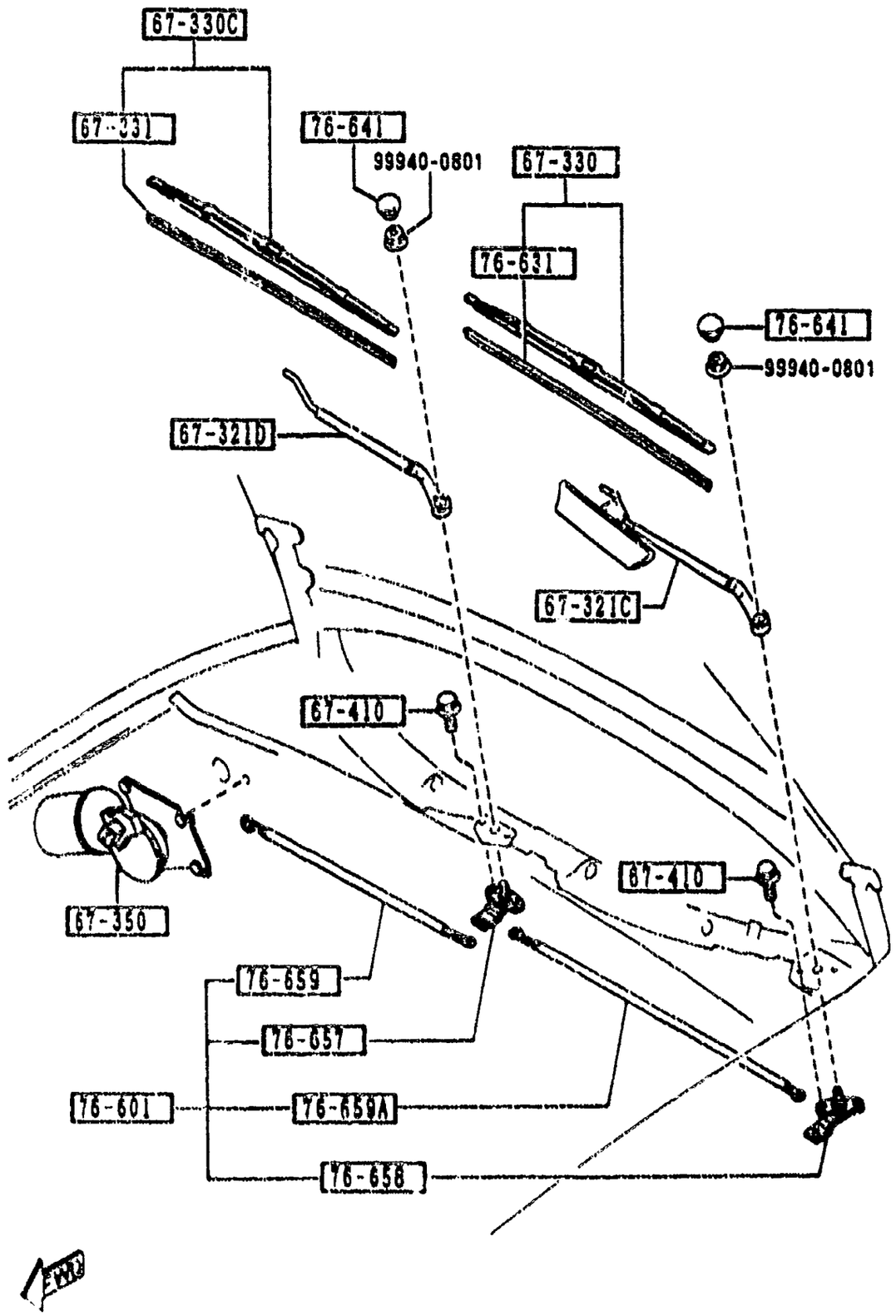

PART NO.	QTY	MODEL/RESTRICTION	MODEL/RESTRICTION	MODEL/RESTRICTION	FROM-TO
76-659A		ARM NO.2,LINK			
NA01-67-362	1				

6740 WIPER MOTOR COMPONENTS(FRONT)

COMPONENTS OF NA01-67-340B
NA04-67-340A

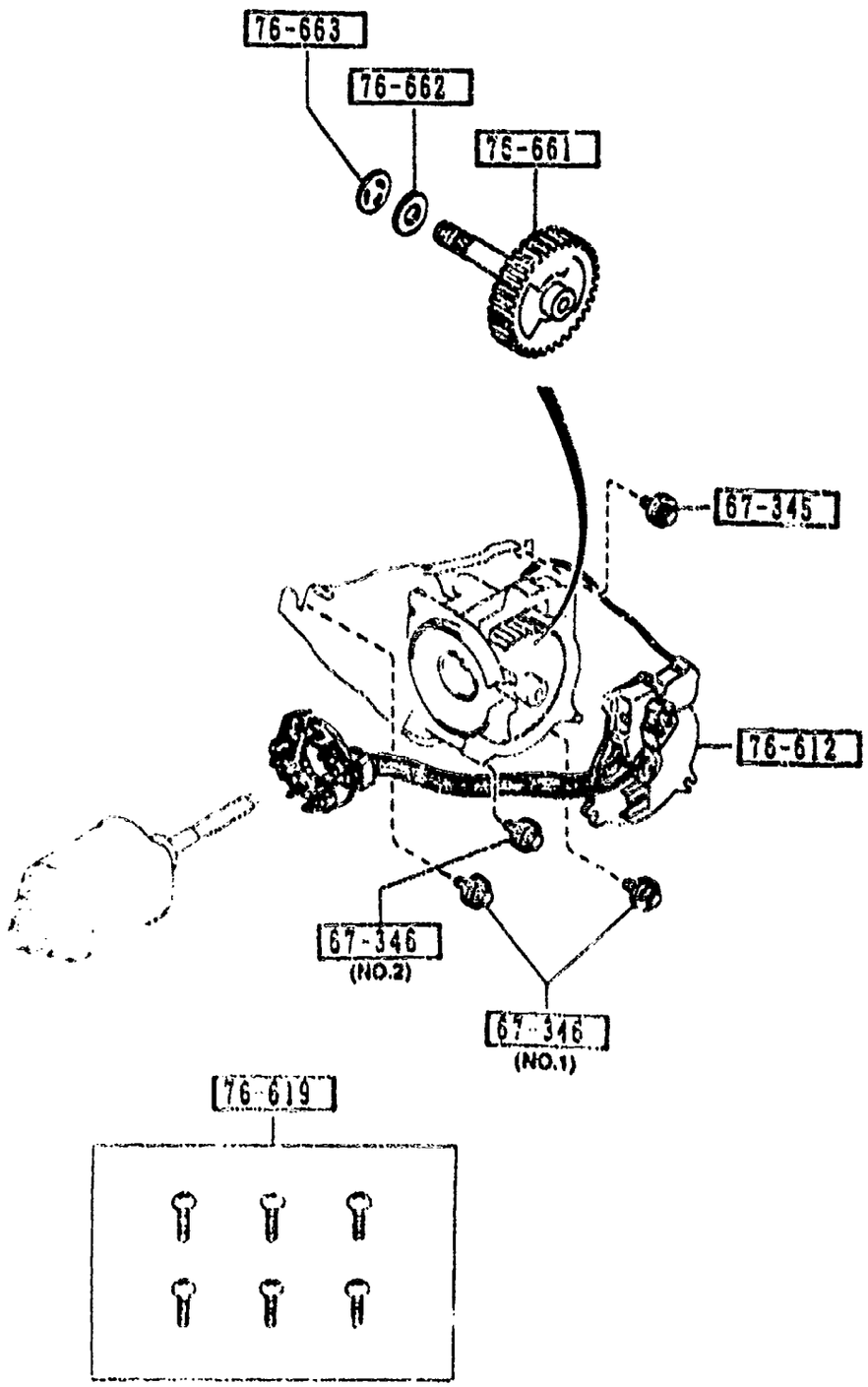

PART NO.	QTY	MODEL/RESTRICTION	MODEL/RESTRICTION	MODEL/RESTRICTION	FROM-TO
67-345		SCREW,EARTH SET-MOTOR BRK			
NA01-67-345	1				
67-346		SCREW,BRACKET-WIPER MOTOR			
NA01-67-346	2	(ILLUST. NO.1)			
NA23-67-346	1	(ILLUST. NO.2)			
76-612		PLATE,HOLDER-BRUSH			
NA23-67-351	1	(EXC.COLD SPEC)			
NA26-67-351	1	(COLD SPEC)			
76-619		PARTS SET			
H043-76-619A	1				
76-661		GEAR,SHAFT			
NA23-67-354	1				
76-662		WASHER			
B094-76-662	1				
76-663		WASHER,TOOTHED			
B094-76-663	1				

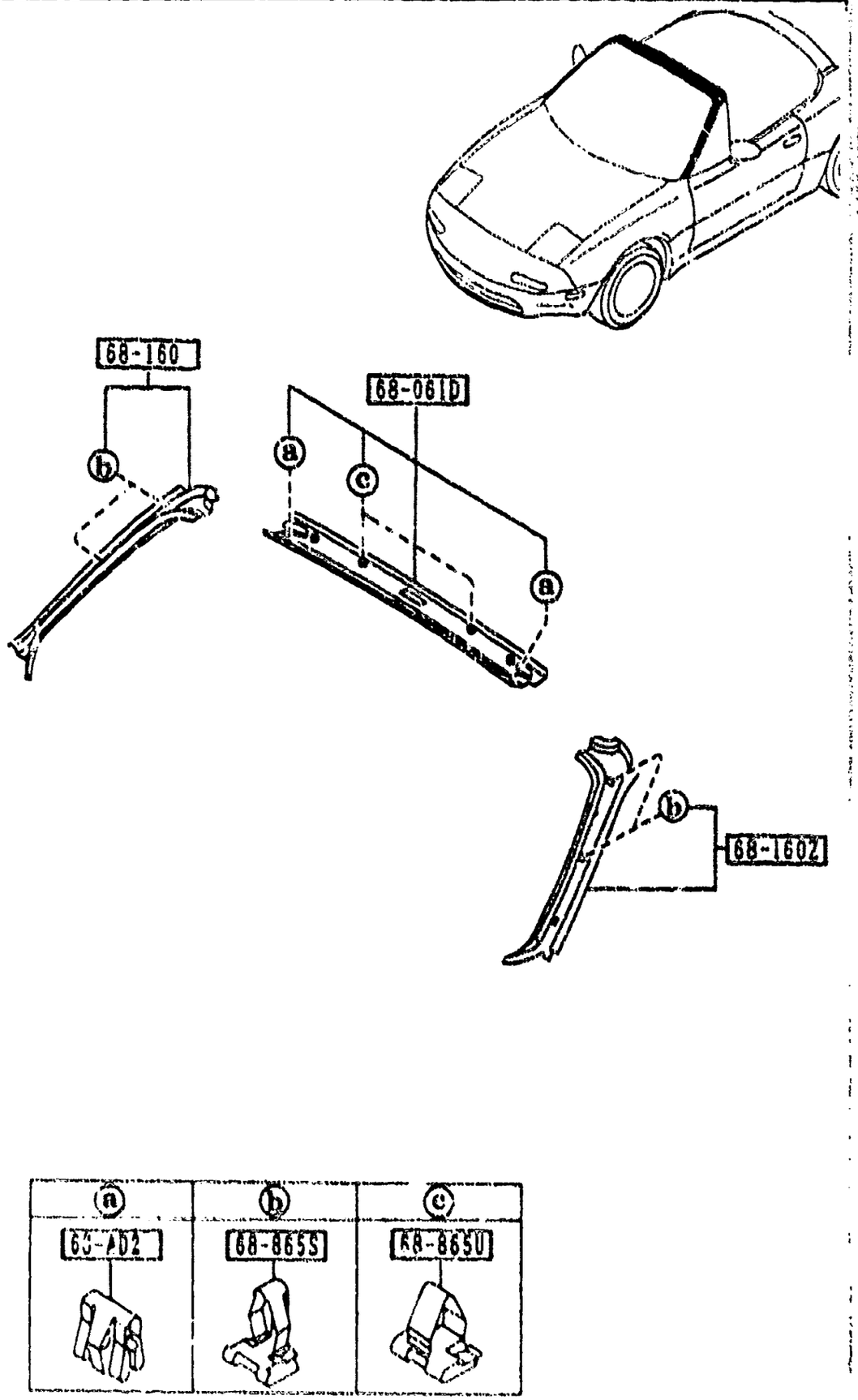

PART NO.	QTY	MODEL/RESTRICTION	MODEL/RESTRICTION	MODEL/RESTRICTION	FROM-TO
68-AD2		CLIP			
B455-68-AD2	2				
68-061D		TRIM,FRONT HEADER			
NA01-68-090A	1				
00	INT-	NA3 NA5 NA4 NA6 BLACK			
68-160		TRIM(R),'A'PILLAR			
NA01-68-160	1				
00	INT-	NA3 NA5 NA4 NA6 BLACK			
68-160Z		TRIM(L),'A'PILLAR			
NA01-68-170	1				
00	INT-	NA3 NA5 NA4 NA6 BLACK			
68-865S		CLIP,TRIM			
GJ12-68-865	4				
68-865U		CLIP,TRIM			
GJ21-68-865	2				

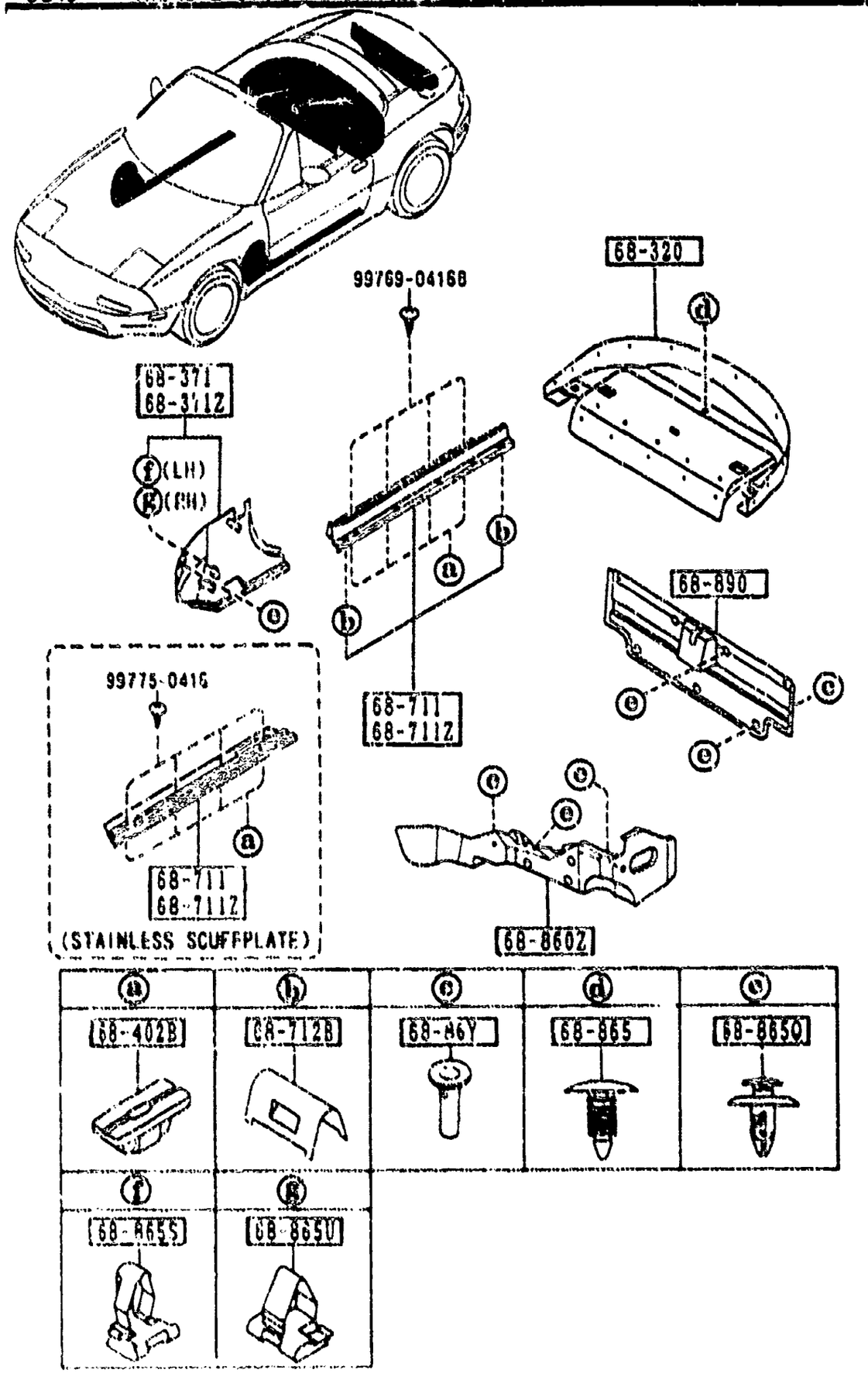

PART NO.	QTY	MODEL/RESTRICTION	MODEL/RESTRICTION	MODEL/RESTRICTION	FROM-TO
68-320		TRAY,REAR PACKAGE			
NA01-68-3F1B	1				-3C01
00	INT-	NA3 BLACK			
88	INT-	NA4 NA5 TAN			
NA01-68-3F1C	1				3C01-
00	INT-	NA3 BLACK			
88	INT-	NA4 NA5 TAN			
68-371		TRIM(R),FRONT SIDE			
NA75-68-370	1				
00	INT-	NA3 BLACK			
88	INT-	NA5 NA4 TAN			
68-371Z		TRIM(L),FRONT SIDE			
NA01-60-390	1				
00	INT-	NA3 BLACK			
88	INT-	NA5 NA4 TAN			
68-402B		GROMMET,SCREW			
FA54-68-719B	8				
68-711		PLATE(R),FRONT SCUFF			
NA01-68-710	1	BASE, (PLASTIC SCUFFPLATE)			
00	INT-	NA3 NA5 NA4 NA6 BLACK			
NA02-68-710	1	OPT, (STAINLESS SCUFFPLATE)			
68-711Z		PLATE(L),FRONT SCUFF			
NA01-68-720	1	BASE, (PLASTIC SCUFFPLATE)			
00	INT-	NA3 NA5 NA4 NA6 BLACK			
NA02-68-720	1	OPT, (STAINLESS SCUFFPLATE)			
68-712B		CLIP			

3C01 NA5[illegible]-507607

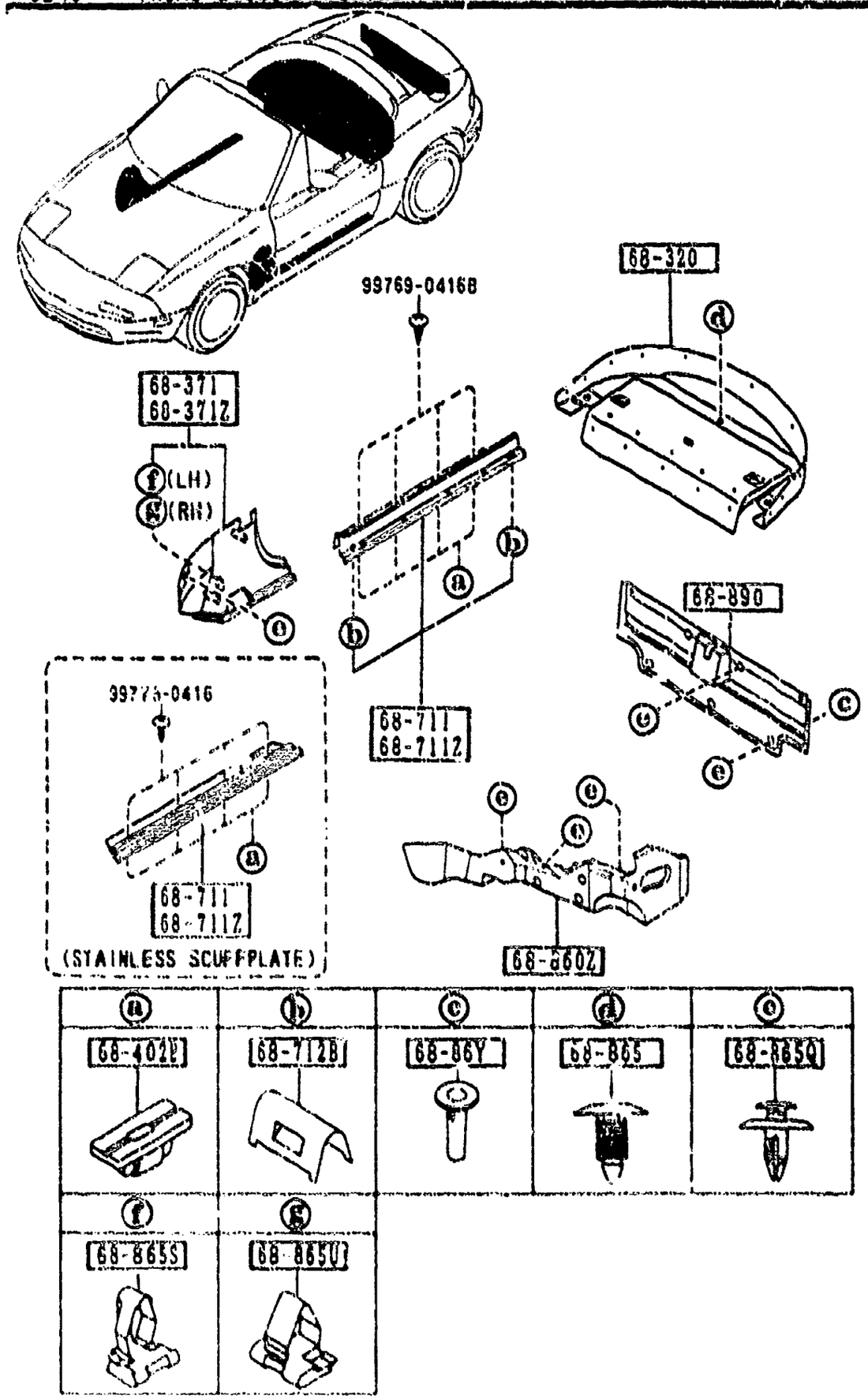

PART NO.	QTY	MODEL/RESTRICTION	MODEL/RESTRICTION	MODEL/RESTRICTION	FROM-TO
CONT'D					
B235-68-712	4	BASE, (PLASTIC SCUFFPLATE)			
68-86Y		CAP,SEAL-TRUNK END TRIM			
KA01-68-86YA	3				
68-860Z		TRIM(L),TRUNK SIDE			
N026-68-871	1				
00	INT-	NA3 NA5 NA4 BLACK			
68-865		FASTENER			
G032-68-865A	18				
00	INT-	NA3 BLACK			
67	INT-	NA5 TAN			
68-865Q		FASTENER			
GJ21-68-885B	12				
00	INT-	NA3 NA5 NA4 NA6 BLACK			
88	INT-	NA5 NA4 TAN			
68-865S		CLIP,TRIM			
GJ12-68-865	1				
68-865U		CLIP,TRIM			
GJ21-68-865	1				
68-890		TRIM,TRUNK END			
NA01-68-891	1				
00	INT-	NA3 NA5 NA4 BLACK			

6860 FLOOR MATS & PADS

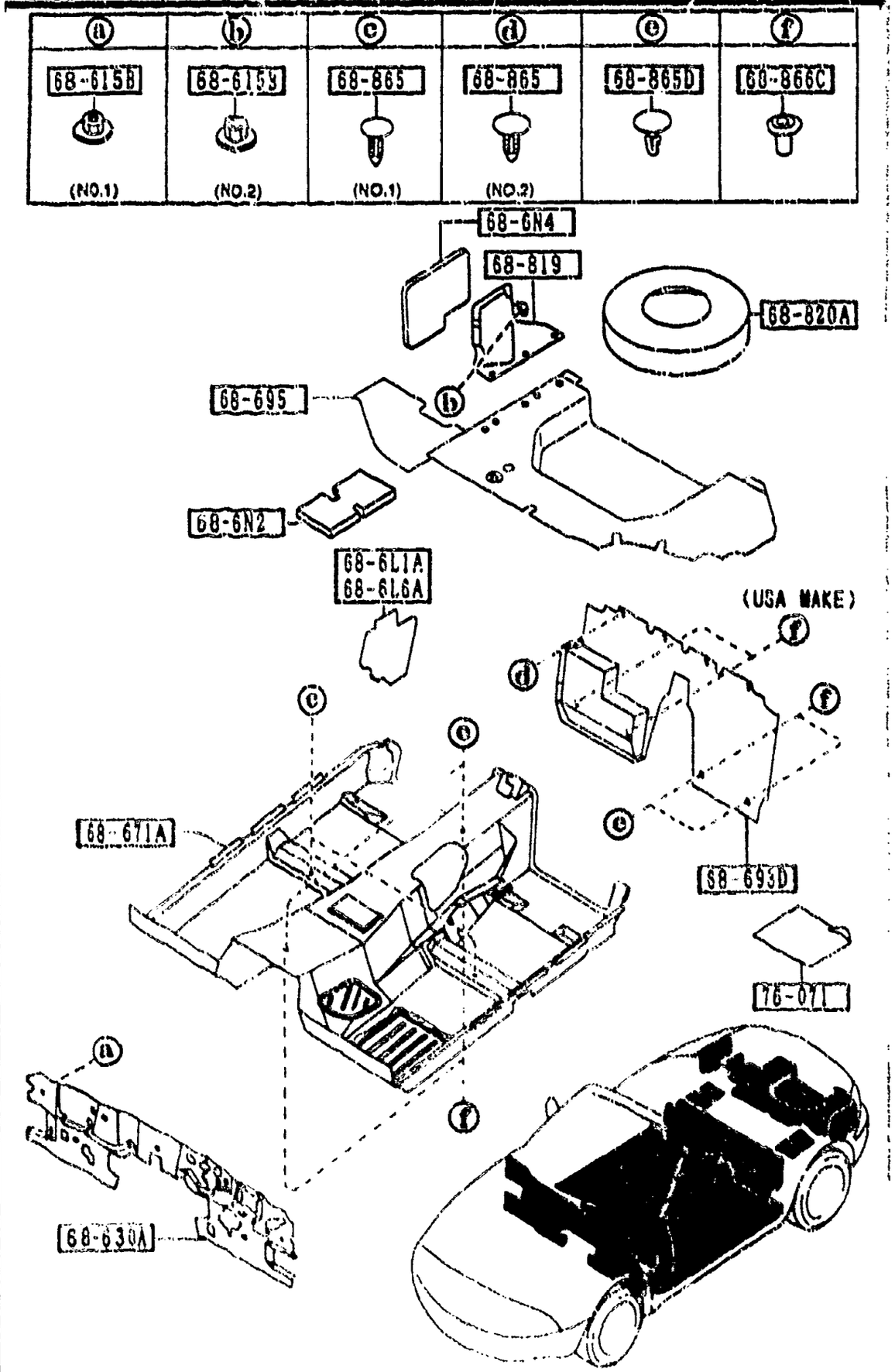

PART NO	QTY	MODEL/RESTRICTION	MODEL/RESTRICTION	MODEL/RESTRICTION	FROM-TO
68-6L1A		COVER(R),HOLE			
NA01-68-6L1	1				
68-6L6A		COVER(L),HOLE			
NA01-68-6L6	1				
68-6N2		INSULATOR,RR FLOOR			
NA01-68-6N2	2				
68-6N4		PAD,RR FENDER			
NA01-68-6N4	1				
68-615B		NUT,FLANGE-CAP			
B100-68-615	5	(ILLUST. NO.1)			
NA01-68-615	1	(ILLUST. NO.2)			
68-630A		INSULATOR,DASHBOARD			
NA01-68-631D	1				
68-671A		MAT,FLOOR			
NA75-68-670	1	BASE, (USA MAKE)			
00	INT-	NA3 BLACK			
NA76-68-670	1	MONTEGO-B-SE, (JAPAN MAKE)			-3C01
00	INT-	NA3 BLACK			
88	INT-	NA5 NA4 TAN			
NA76-68-670A	1	MONTEGO-B-SE, (JAPAN MAKE)			3C01-
88	INT-	NA4 NA5 TAN			
68-693D		MAT,REAR END			
NA75-68-693	1	BASE, (USA MAKE)			
00	INT-	NA3 BLACK			
NA76-68-693	1	MONTEGO-B-SE, (JAPAN MAKE)			-3C01
00	INT-	NA3 BLACK			
88	INT-	NA5 NA4 TAN			
NA76-68-693A	1	MONTEGO-B-SE, (JAPAN MAKE)			3C01-

3C01 NA3MAR-507607

6860 FLOOR MATS & PADS

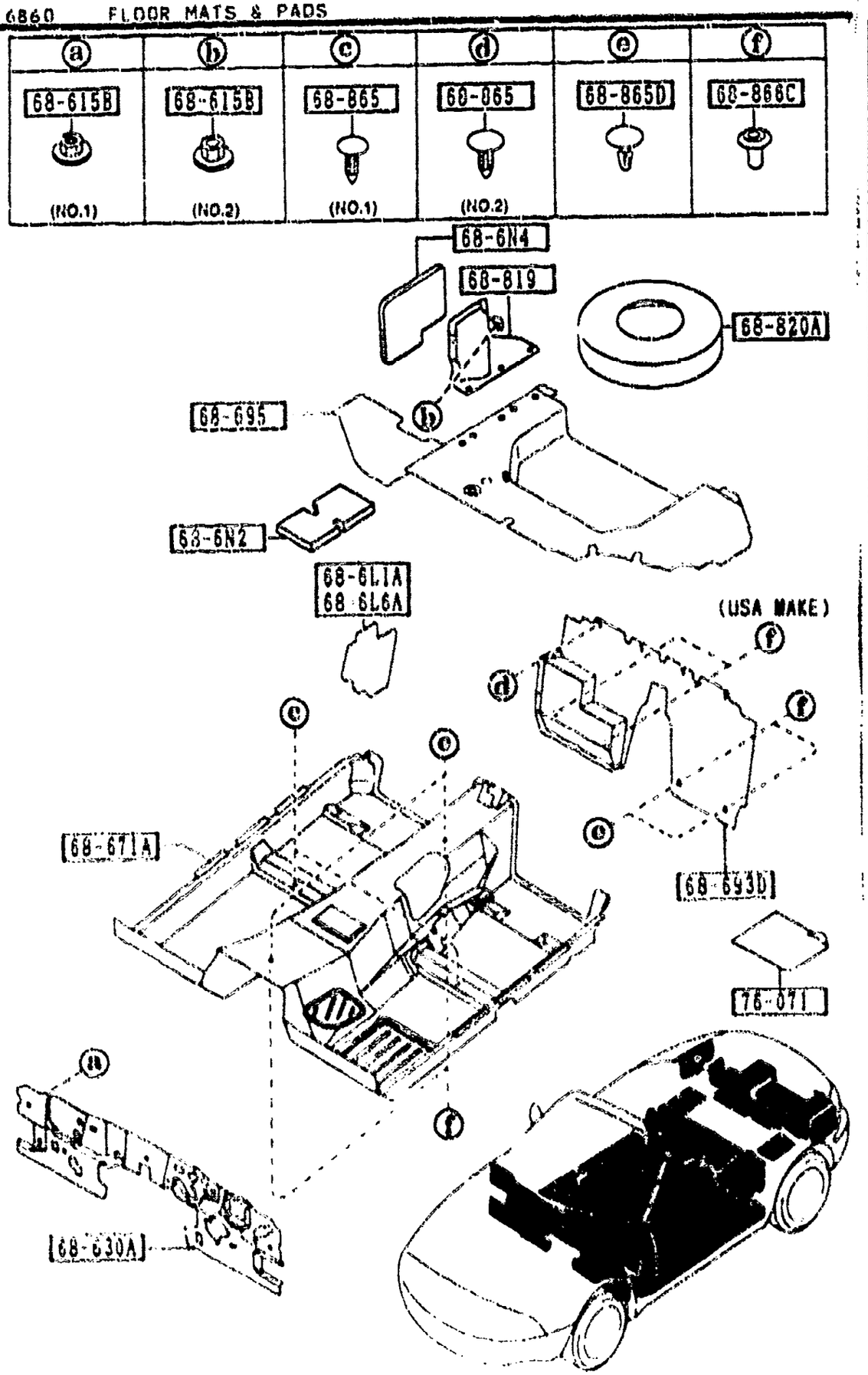

PART NO	QTY	MODEL/RESTRICTION	MODEL/RESTRICTION	MODEL/RESTRICTION	REMARKS
CONT'D					
88	INT-	NA4 NA5 TAN			
68-695		MAT,TRUNK ROOM			
N026-68-811	1				-4201
00	INT-	NA3 NA5 NA4 BLACK			
N026-68-811A	1				4201
00	INT-	NA3 NA4 NA5 BLACK			
68-819		COVER,BATTERY			
NA01-68-819B	1				
00	INT-	NA3 NA5 NA4 BLACK			
68-820A		COVER,SPARE TIRE			
NA01-68-8P9A	1				
68-865		FASTENER			
B003-68-865	2	(ILLUST. NO.1)			
G032-68-865A	4	(ILLUST. NO.2)			
00	INT-	NA3 BLACK			
67	INT-	NA5 TAN			
68-865D		FASTENER			
S003-68-865A	4				
00	INT-	NA3 BLACK			
68	INT-	NA5 NA4 TAN			
68-866C		FASTENER,SEAL			
B235-68-865A	4	MONTEGO-B-SE, (JAPAN MAKE)			
B235-68-865A	6	BASE, (USA MAKE)			
76-071		SILENCER,FLOOR			
0208-76-071	1	30CMX30CM			

4201 NA3***-511601

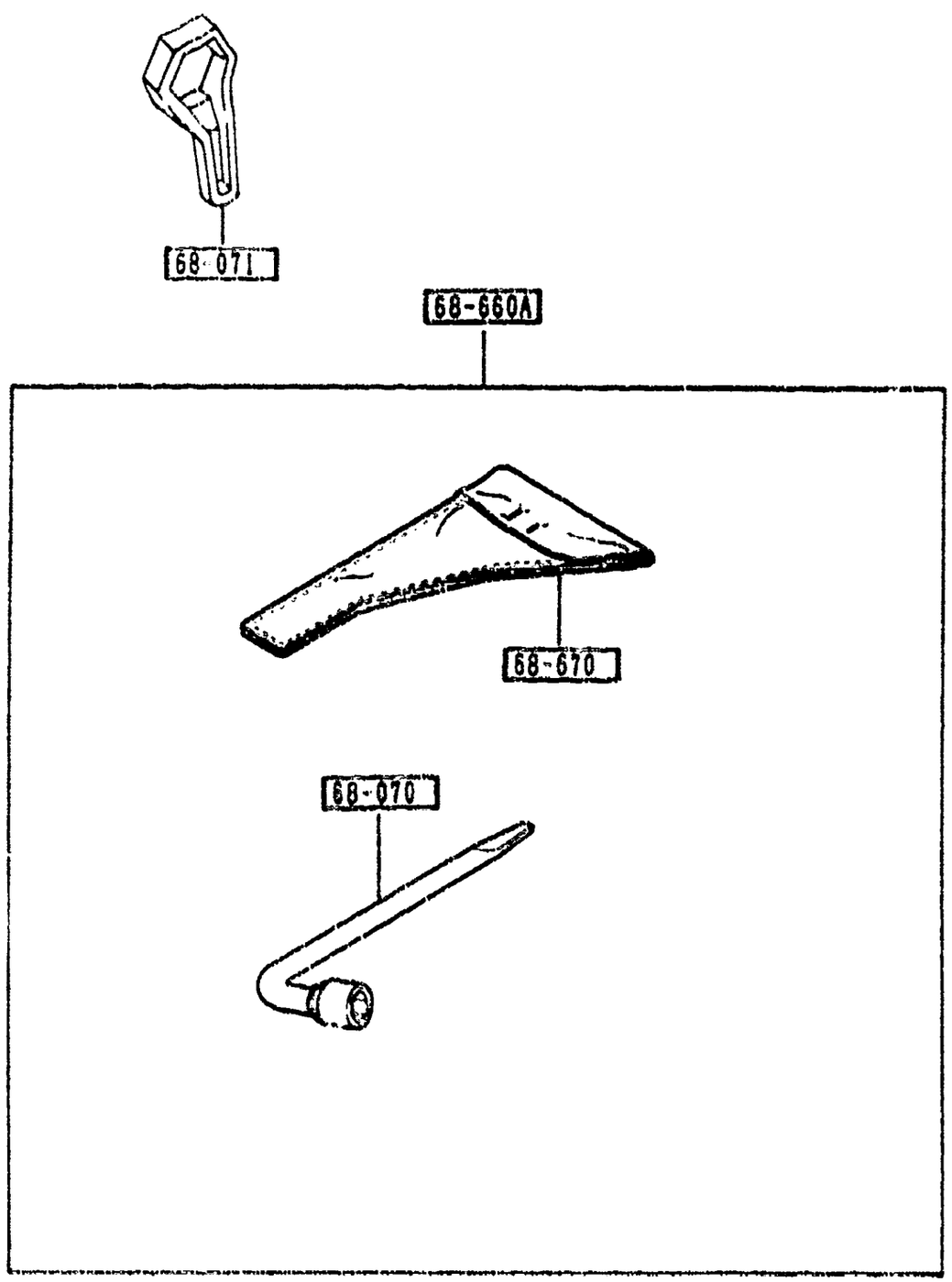

PART NO	QTY	MODEL/RESTRICTION	MODEL/RESTRICTION	MODEL/RESTRICTION	FROM-TO
68-070		WRENCH,HUB NUT			
NA01-68-070	1				
68-071		WRENCH,WHEEL CAP			
F057-68-071	1				
68-660A		TOOL SET			
NA01-69-650	1				
68-670		BAG,TOOL			
NA01-69-670	1				

6900 VISORS,ASSIST HANDLES & MIRRORS

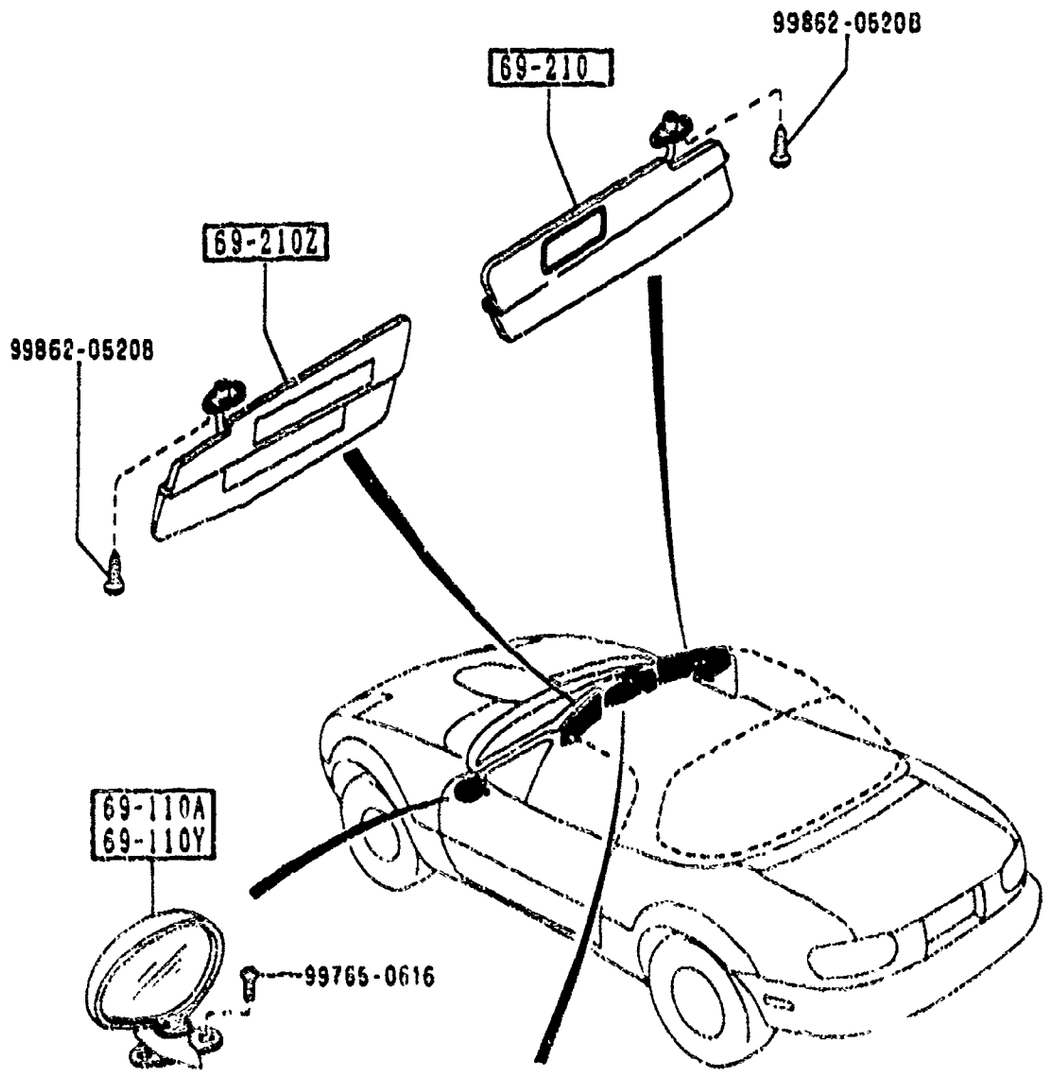

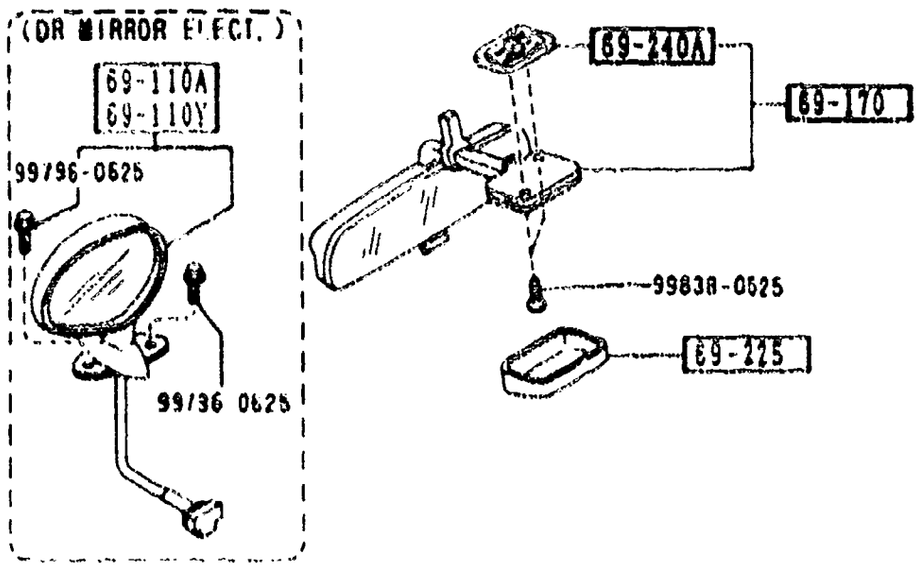

PART NO.	QTY	MODEL/RESTRICTION	MODEL/RESTRICTION	MODEL/RESTRICTION	REMARK
69-110A		MIRROR(R),DOOR			
NA05-69-120A	1	BASE, (DR MIRROR MANUAL)			
HU	EXT-	HU NEO GREEN			
PT	EXT-	PT CHAST WHITE			
PZ	EXT-	PZ BRILLIANT BL[illegible]			
SU	EXT-	SU CLASSIC RED			
6W	EXT-	6W LAGUNA BLUE M.			
NA52-69-120C	1	PKG-A, PKG-B, PKG-C, (DR MIRROR ELECT.)			
HU	EXT-	HU NEO GREEN			
MB	EXT-	MB MONTEGO BLUE M			
PT	EXT-	PT CHAST WHITE			
PZ	EXT-	PZ BRILLIANT BLACK			
SU	EXT-	SU CLASSIC RED			
6W	EXT-	6W LAGUNA BLUE M.			
69-110Y		MIRROR(L),DOOR			
NA05-69-180A	1	BASE, (DR MIRROR MANUAL)			
HU	EXT-	HU NEO GREEN			
PT	EXT-	PT CHAST WHITE			
PZ	EXT-	PZ BRILLIANT BLACK			
SU	EXT-	SU CLASSIC RED			
6W	EXT-	6W LAGUNA BLUE M.			
NA52-69-100C	1	PKG-A, PKG-B, PKG-C, (DR MIRROR ELECT.)			
HU	EXT-	HU NEO GREEN			
MB	EXT-	MB MONTEGO BLUE M			
PT	EXT-	PT CHAST WHITE			
PZ	EXT-	PZ BRILLIANT BLACK			
SU	EXT-	SU CLASSIC RED			
6W	EXT-	6W LAGUNA BLUE M.			
69-170		MIRROR,INTERIOR			
NA01-69-220	1				-4701
00	INT-	NA3 NA5 NA4 NA6 BLACK			

4701 NA3***-521312

6900 VISORS,ASSIST HANDLES & MIRRORS

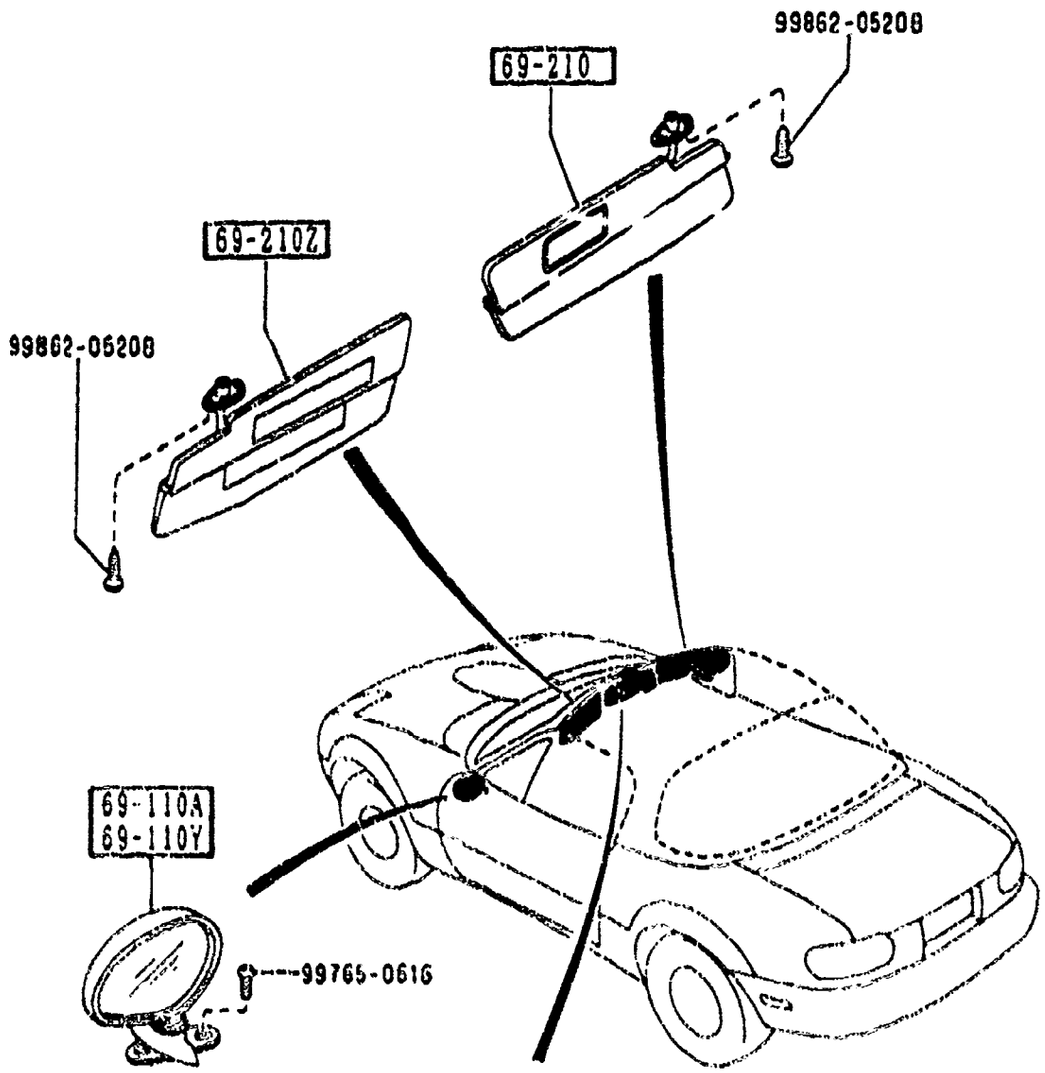

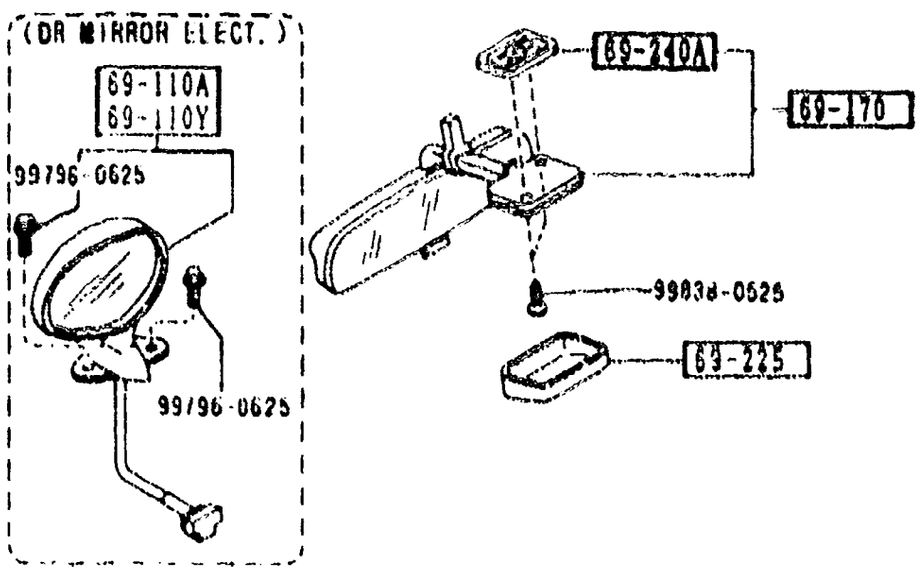

PART NO	QTY	MODEL/RESTRICTION	MODEL/RESTRICTION	MODEL/RESTRICTION	REMARKS
CONT'D					
MNA01-69-220A	1				4701-
69-210		SUN VISOR(R)			
NA01-69-270B	1				
02	INT-	NA5 NA3 NA4 BLACK			
69-210Z		SUN VISOR(L)			
NA75-69-320	1	(W/AIR BAG-DRIV.&PASS.SIDE)			
02	INT-	NA3 NA5 NA4 BLACK			
69-225		COVER,INTERIOR MIRROR			
GJ21-69-225	1				
00	INT-	NA3 NA5 NA4 NA6 BLACK			
69-240A		BASE,INTERIOR MIRROR			
NA01-69-240	1				

4701 NA5***-521512

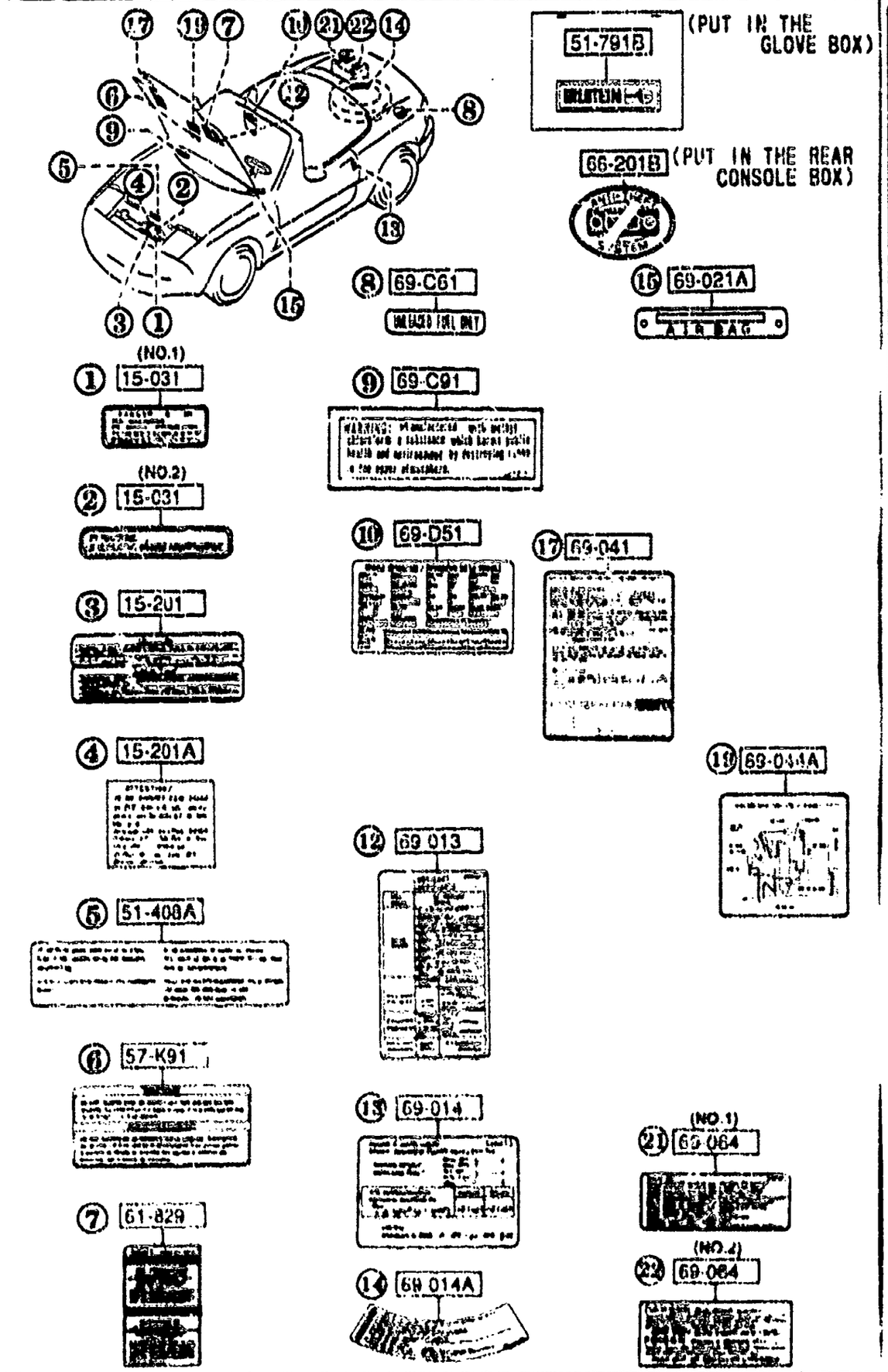

PART NO	QTY	MODEL/RESTRICTION	MODEL/RESTRICTION	MODEL/RESTRICTION	FROM-TO
15-031		LABEL,CAUTION			
B660-15-031	1	(ILLUST. NO.1)			
E508-15-031	1	(ILLUST. NO.2)			
15-201		PLATE,CAUTION			
0488-15-201	1				
15-201A		LABEL,CAUTION-RADIATOR			
8791-15-201	1				
51-408A		LABEL,CAUTION-RETRACTABLE			
NA04-51-502	1				
51-791B		LABEL,BILSTEIN			
N021-51-790	1	(BILSTEIN DAMP.)			
57-K91		LABEL'A',CAUTION-A/B			
KA78-57-K91	1				
61-829		LABEL,CAUTION			
FD16-61-439B	1	(A)			
66-201B		LABEL,ANTI THEFT-AUDIO			
NA01-66-201	1	(W/O SENSORY SOUND)			
69-C61		LABEL,UNLEADED FUEL			
UB40-69-C61	1				
69-C91		LABEL,CFC			
GB7E-69-C91	1	(W/HFC LABEL)			-3901
69-D51		LABEL,VEHICLE INFORMATION			
B001-69-D51	1	VIN NO.IS REQUIRED			
69-013		LABEL,OIL			
NA01-69-021D	1				-4201
69-014		LABEL,TIRE			
NA01-69-014	1				

3901 NA3***-502360
4201 NA3***-511601

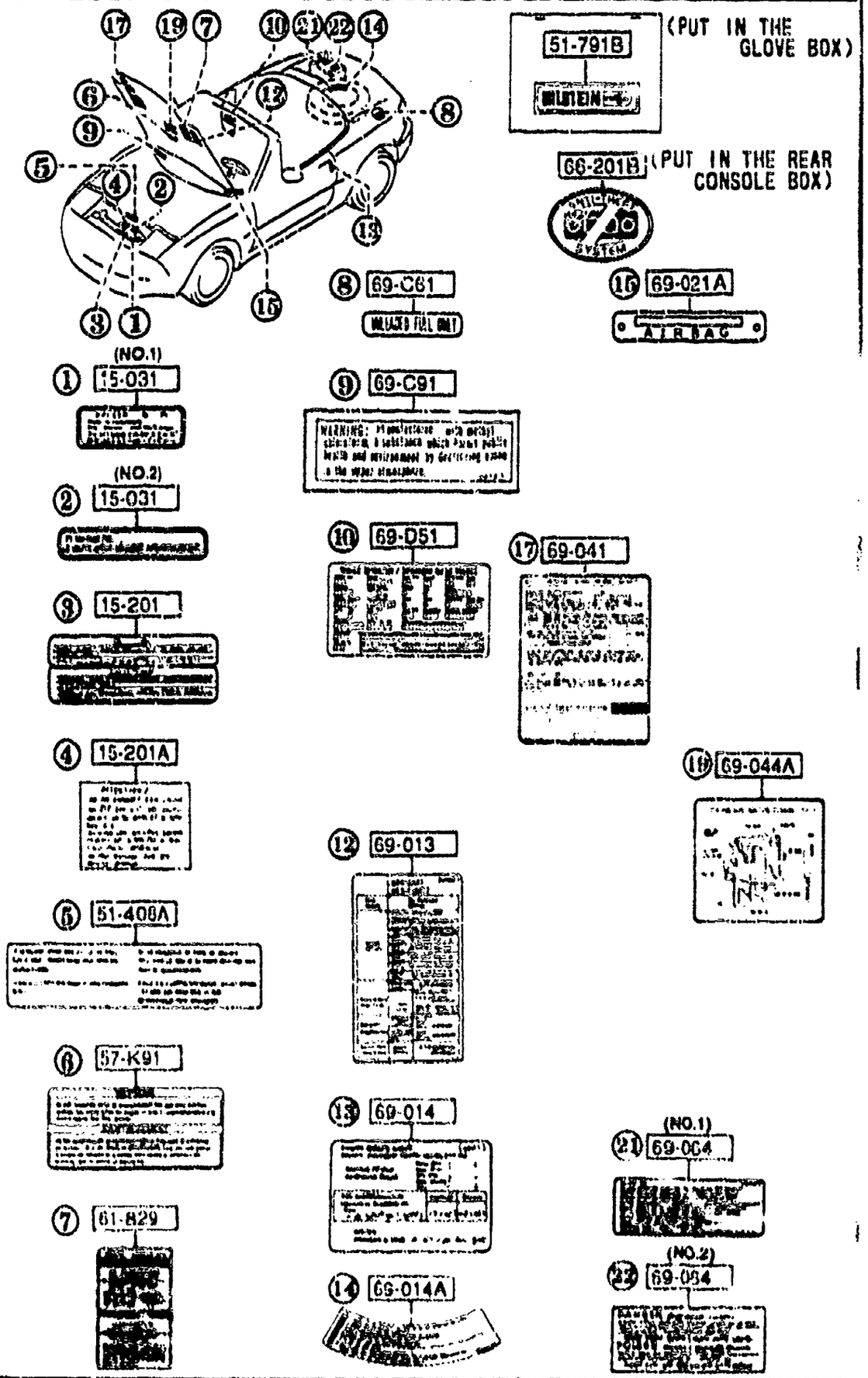

PART NO.	QTY	MODEL/RESTRICTION	MODEL/RESTRICTION	MODEL/RESTRICTION	FROM-TO
69-014A		LABEL,TEMPORARY TIRE			
BF68-69-073	1	ENGLISH			
BF69-69-073B	1	FRENCH			
69-021A		PLATE,CAUTION			
NA01-69-068A	1				
69-041		LABEL,EMISSION			
NA75-69-036	1	ENGLISH			
69-044A		LABEL,VAC.DIAPHRAGM			
NA75-69-044	1	(USA)			
69-064		LABEL,BATTERY			
FA03-69-C72A	1	(ILLUST. NO.1) (W/BATTERY LABEL)			
FA01-69-064A	1	(ILLUST. NO.2) (W/BATTERY LABEL)			

7250 QUARTER WINDOW & TRIMS

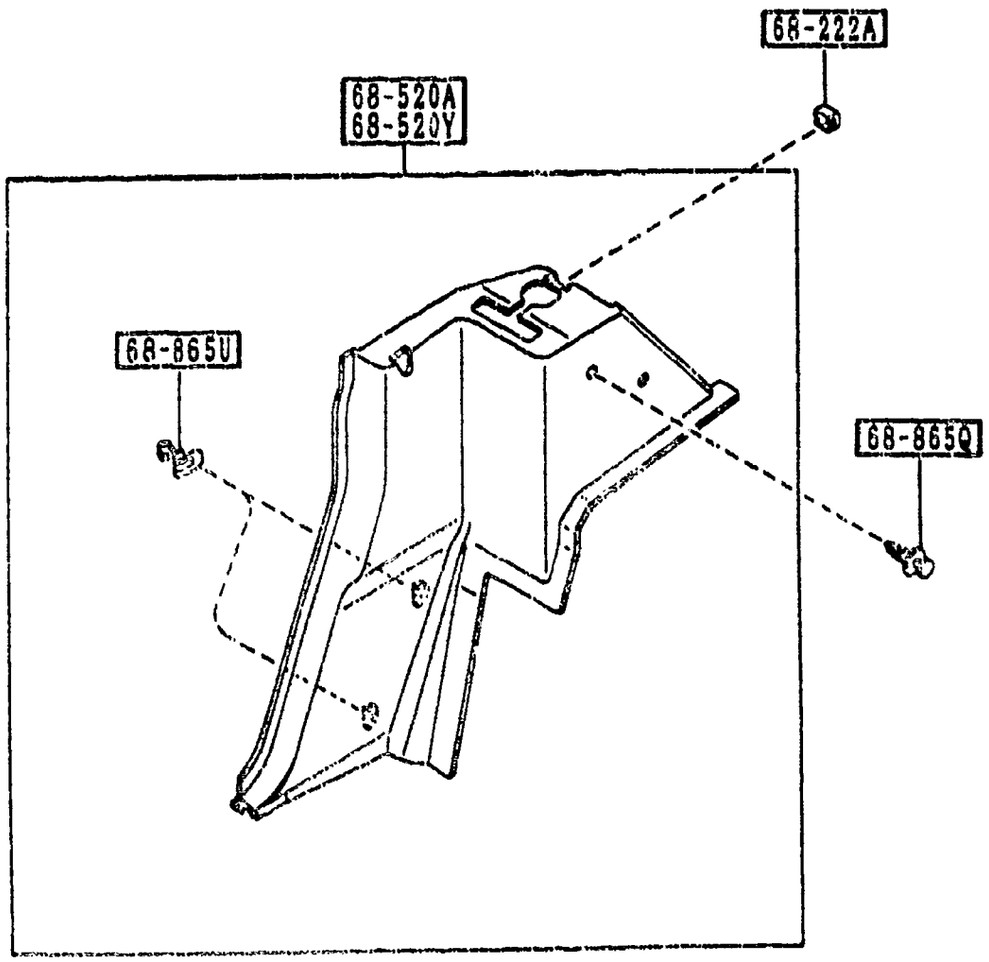

PART NO.	QTY	MODEL/RESTRICTION	MODEL/RESTRICTION	MODEL/RESTRICTION	FROM-TO
68-222A		COVER,HOLE			
NA01-68-222A	2				
00	INT-	NA3 NA6 BLACK			
88	INT-	NA5 NA4 TAN			
68-520A		TRIM(R),QUARTER			
NA75-68-520	1	(W/O DETACHABLE HARD TOP)			
00	INT-	NA3 NA6 BLACK			
88	INT-	NA4 NA5 TAN			
NA76-68-520	1	(W/DETACHABLE HARD TOP)			
00	INT-	NA3 NA6 BLACK			
88	INT-	NA4 NA5 TAN			
68-520Y		TRIM(L),QUARTER			
NA75-68-550	1	(W/O DETACHABLE HARD TOP)			
00	INT-	NA3 NA6 BLACK			
88	INT-	NA4 NA5 TAN			
NA76-68-550	1	(W/DETACHABLE HARD TOP)			
00	INT-	NA3 NA6 BLACK			
88	INT-	NA4 NA5 TAN			
68-865Q		FASTENER			
GJ21-68-865B	2				
00	INT-	NA3 NA4 NA5 NA6 BLACK			
88	INT-	NA5 NA4 TAN			
68-865U		CLIP,TRIM			
GJ21-68-865	4				