# Parts Catalog

# Mazda MX-5 MIATA U.S.A. ('95►'96)

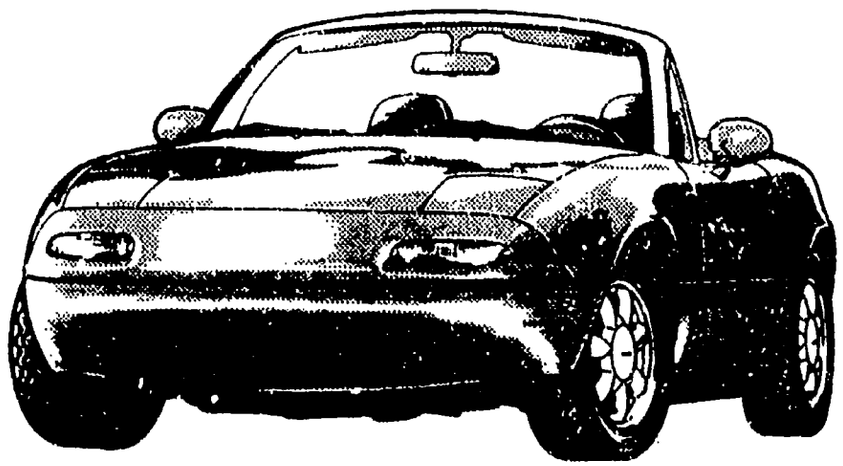

NA35 • -600001~700000
NA3 • • -700001~800000

**Jul.'97 (FINAL)**

Catalog No. AU-NA05-04

mazda

© 1997 Mazda Motor Corporation

## LAYOUT OF CONTENTS / DISPOSITION TYPOGRAPHIQUE DE CONTENU / DISPOSICION DEL CONTENIDO / ANORDNUNG DES INHALTS

- The following is a typical example of the layout of contents on Mazda microfiche parts catalog.
- Voici un exemple typique de la disposition typographique de contenu dans les microfiches de catalogue des pièces de Mazda.
- El siguiente es un ejemplo típico de la disposición del contenido en una microficha del catálogo de repuestos de Mazda.
- Folgendes ist ein typisches Beispiel der Inhaltsanordnung des Mazda-Mikrofiche-Teilekatalogs.

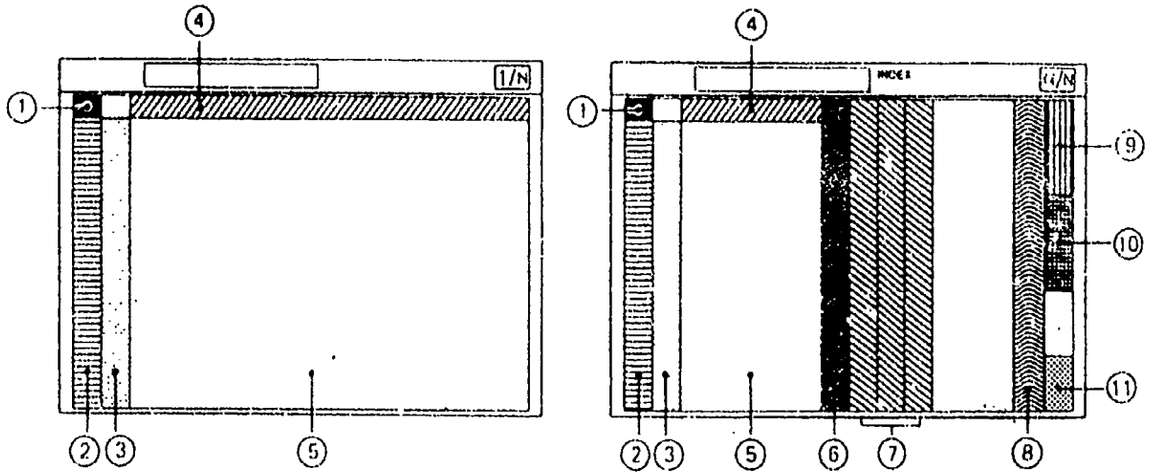


**Remark :** The items listed under ④ have been deleted from each fiche since Dec. '93

① • Layout of contents
• Disposition Typographique de Contenu
• Disposición del contenido
• Anordnung des Inhalts

② • Pictorial Index
• Index par Schémas
• Indice Gráfico
• Illustrierter Index

③ • Master Section No. Index
• Index des Numéros des Sections Totale
• Indice del Número de la Sección Maéstra
• Hauptabschnitssnummer-Index

~~④ • Section No. Index for the Column~~
~~• Index des Numéros des Sections pour les Colonnes~~
~~• N° de la Sección para el Indice~~
~~• Abschnitssnummer-Index für die Spalte~~

⑤ • Illustration & Text
• Illustrations et Textes
• Ilustración y Texto
• Abbildung und Text

⑥ • Part No. Index
• Index des Numéros des Pièces
• Indice del N° de Pieza
• Teile-Nr.-Index

⑦ • Alphabetical Index
• Index Alphabétique
• Indice Alfabético
• Alphabetischer Index

⑧ • Model Identification
• Identification des Modèles
• Identificación del Modelo
• Modell-Kennzeichnung

⑨ • Vehicle Identification System
• Système d'Identification de Véhicule
• Sistema de Identification de Vehículo
• Fahrzeug-Identifikations-system

# PICTORIAL INDEX

## GASOLINE ENGINE 4 - CYLINDER (1/2)

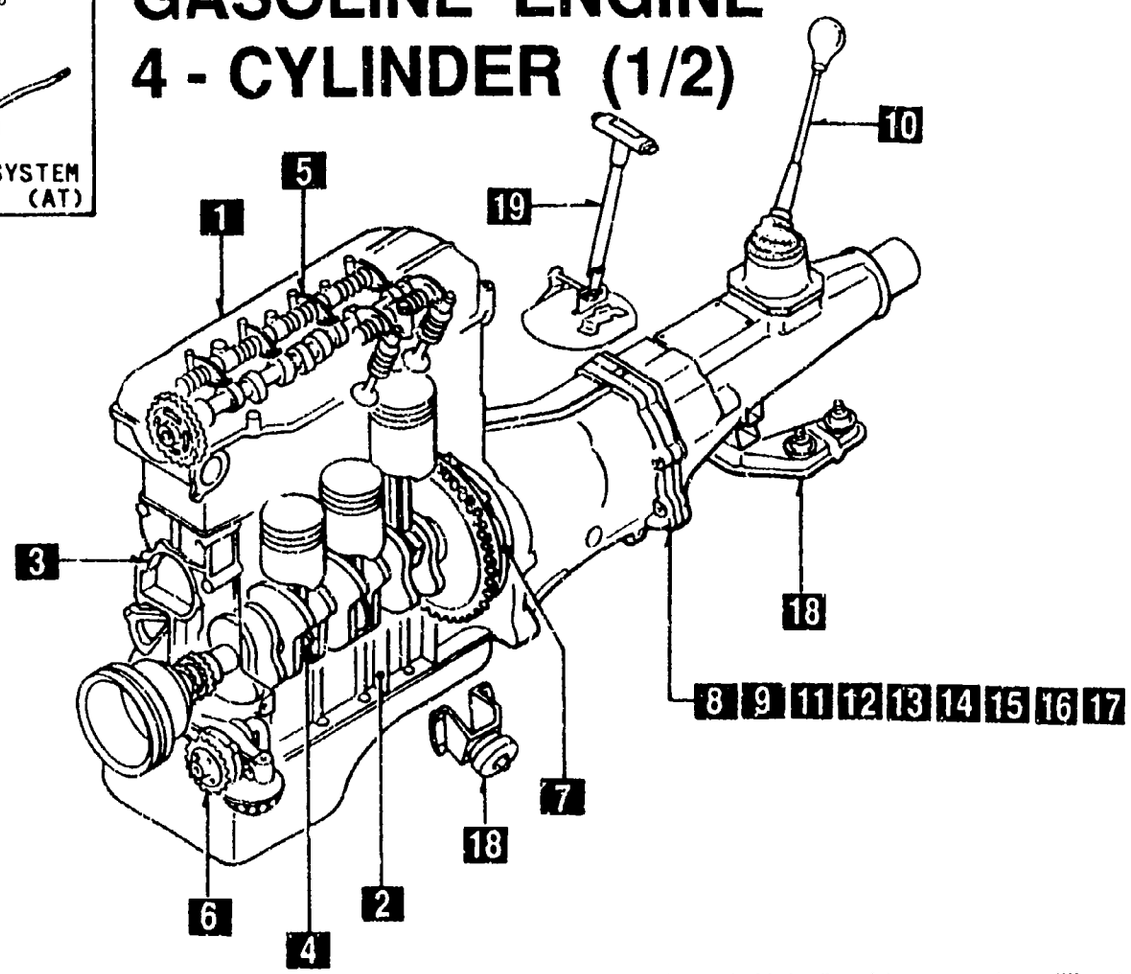


As this illustration is prepared to be applicable to all models, some parts are different in specifications from parts listed in this parts Catalog.

**1000**

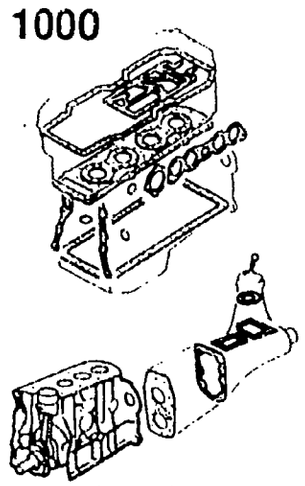

ENGINE & GASKET SETS

**1 1010**

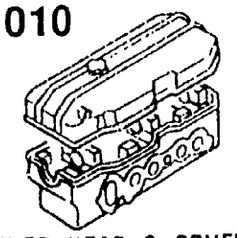

CYLINDER HEAD & COVER

**2 1030**

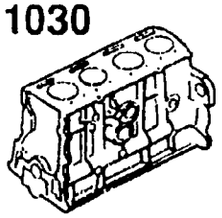

CYLINDER BLOCK

**3 1040**

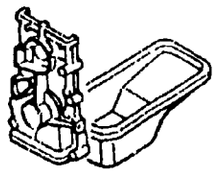

OIL PAN & TIMING COVER

**4 1100**

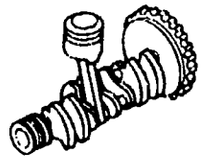

PISTON, CRANKSHAFT & FLYWHEEL

**5 1200**

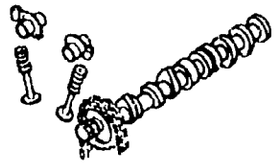

VALVE SYSTEM

**19 4600**

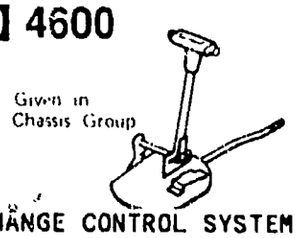


CHANGE CONTROL SYSTEM (AT)

**6 1400**

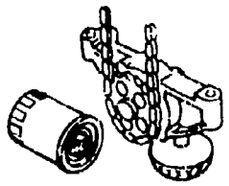

OIL PUMP & FILTER

**18 3900**

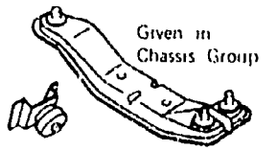


ENGINE & T/MISSION MOUNTINGS

**7 1600**

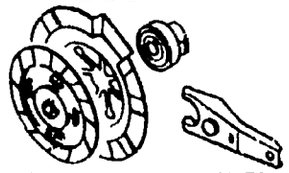

CLUTCH DISC & COVER (MANUAL)

**17 1960**

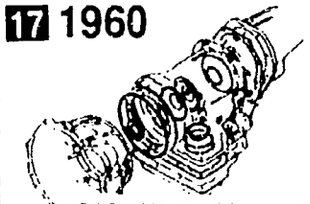

GASKET & SEAL KIT (AUTOMATIC)

**8 1700**

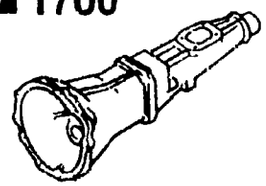

TRANSMISSION CASE (MANUAL)

**16 1950**

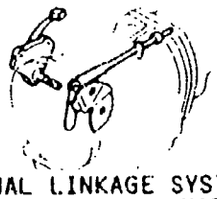

MANUAL LINKAGE SYSTEM (AUTOMATIC)

**9 1710**

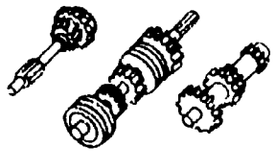

TRANSMISSION GEARS (MANUAL)

**15 1940**

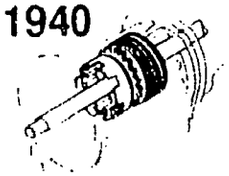

GOVERNOR, LOW & REVERSE PISTON (AUTOMATIC)

**14 1930**

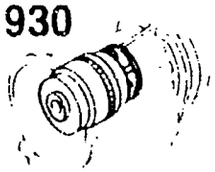

CLUTCHES & PLANETARY GEARS (AUTOMATIC)

**13 1925**

CONTROL VALVE (AUTOMATIC)

**12 1920**

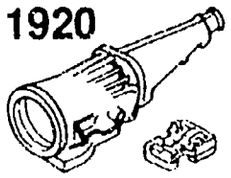

TRANSMISSION CASE & MAIN CONTROL SYSTEM (AUTOMATIC)

**11 1910**

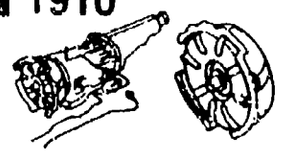

TORQUE CONVERTER, OIL PUMP & PIPINGS (AUTOMATIC)

**10 1720**

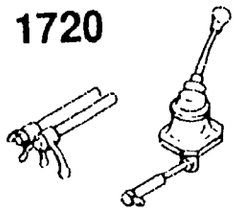

CHANGE CONTROL SYSTEM (MANUAL)

# PICTORIAL INDEX

**1** 1300

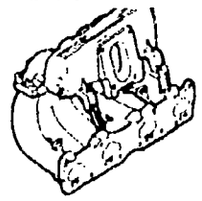

INLET MANIFOLD

**2** 1310

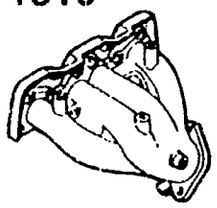

EXHAUST MANIFOLD

**3** 1320

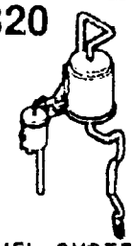

FUEL SYSTEM

**4** 1325

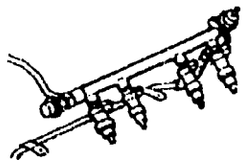

FUEL DISTRIBUTOR

**5** 1330

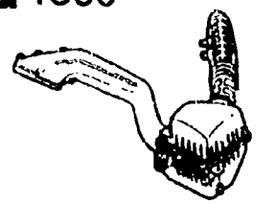

AIR CLEANER

**6** 1364

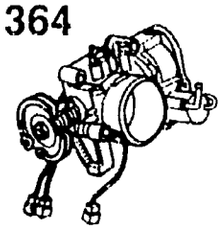

THROTTLE BODY

## GASOLINE ENGINE
## 4 - CYLINDER (2/2)

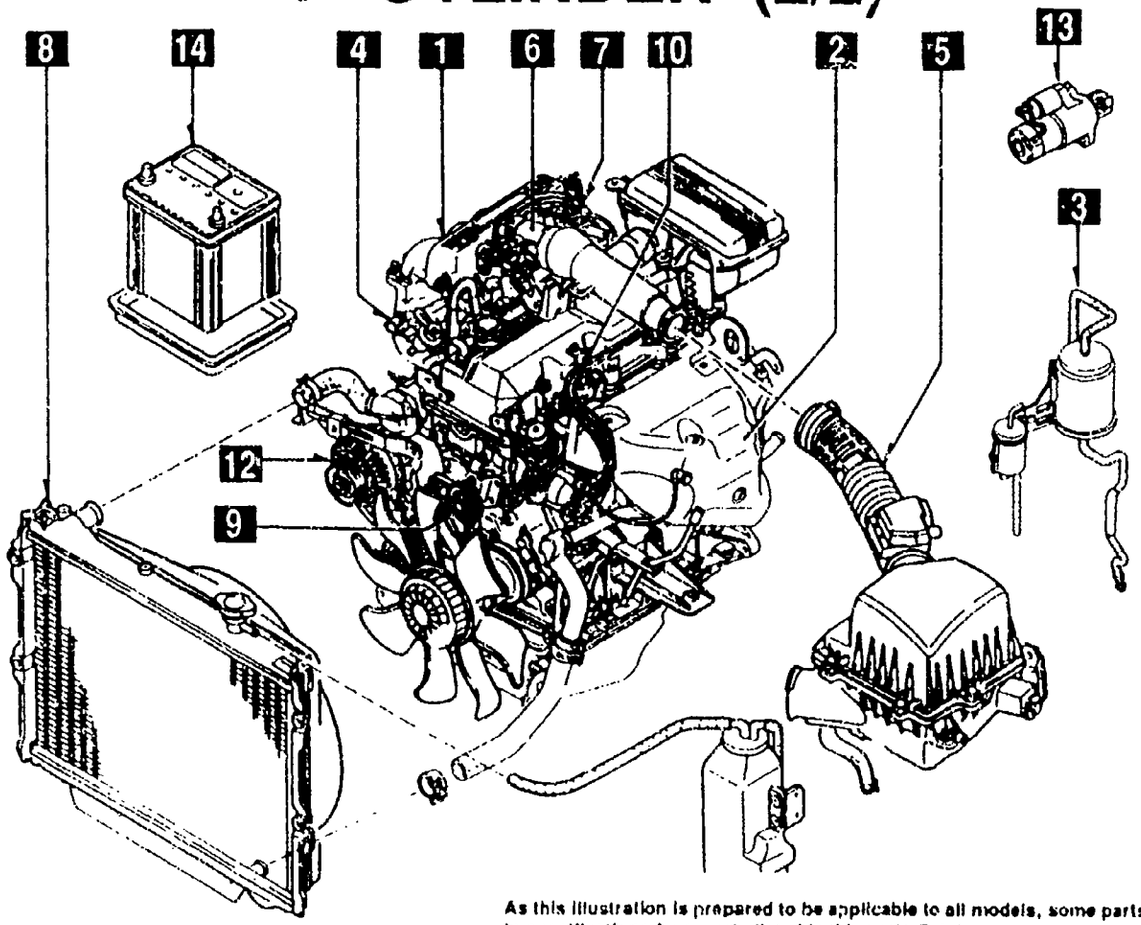


As this illustration is prepared to be applicable to all models, some parts are different in specifications from parts listed in this parts Catalog.

**7** 1370

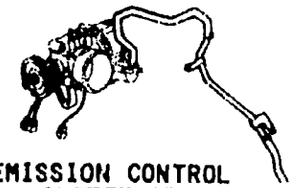

EMISSION CONTROL SYSTEM (INLET SIDE)

**8** 1500

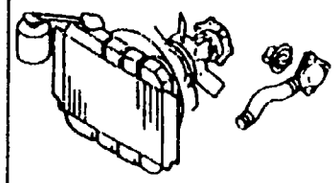

COOLING SYSTEM

**9** 1580

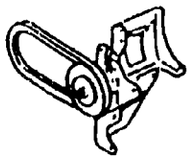

BRACKET, PULLEY & BELT

**10** 1800

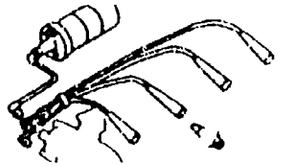

ENGINE ELECTRICAL SYSTEM

**11**

**14** 1850

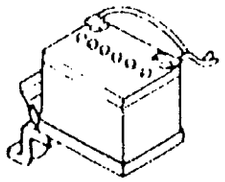

BATTERY

**13** 1840

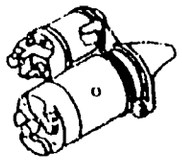

STARTER

**12** 1830

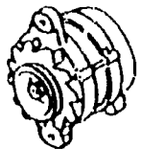

ALTERNATOR

# PICTORIAL INDEX

**1** 2505

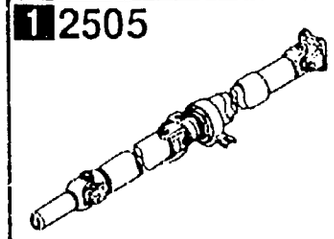

REAR PROPELLER SHAFT

**2** 2550

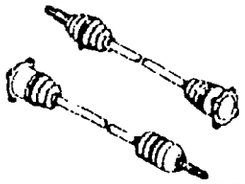

REAR DRIVE SHAFT

**3** 2600

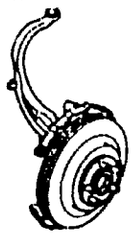

REAR AXLE

**4** 2610

REAR BRAKE MECHANISMS

**5** 2710

REAR DIFFERENTIALS

**6** 2800

REAR SUSPENSION MECHANISMS

**20** 4000

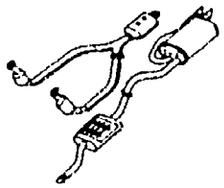

EXHAUST SYSTEM

**21** 4600

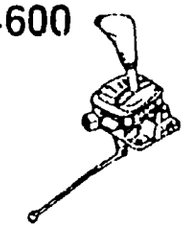

CHANGE CONTROL SYSTEM

**22** 1720

Given in Engine Group

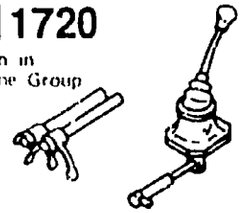

CHANGE CONTROL SYSTEM (MANUAL TRANSMISSION)

## CHASSIS (1/2)

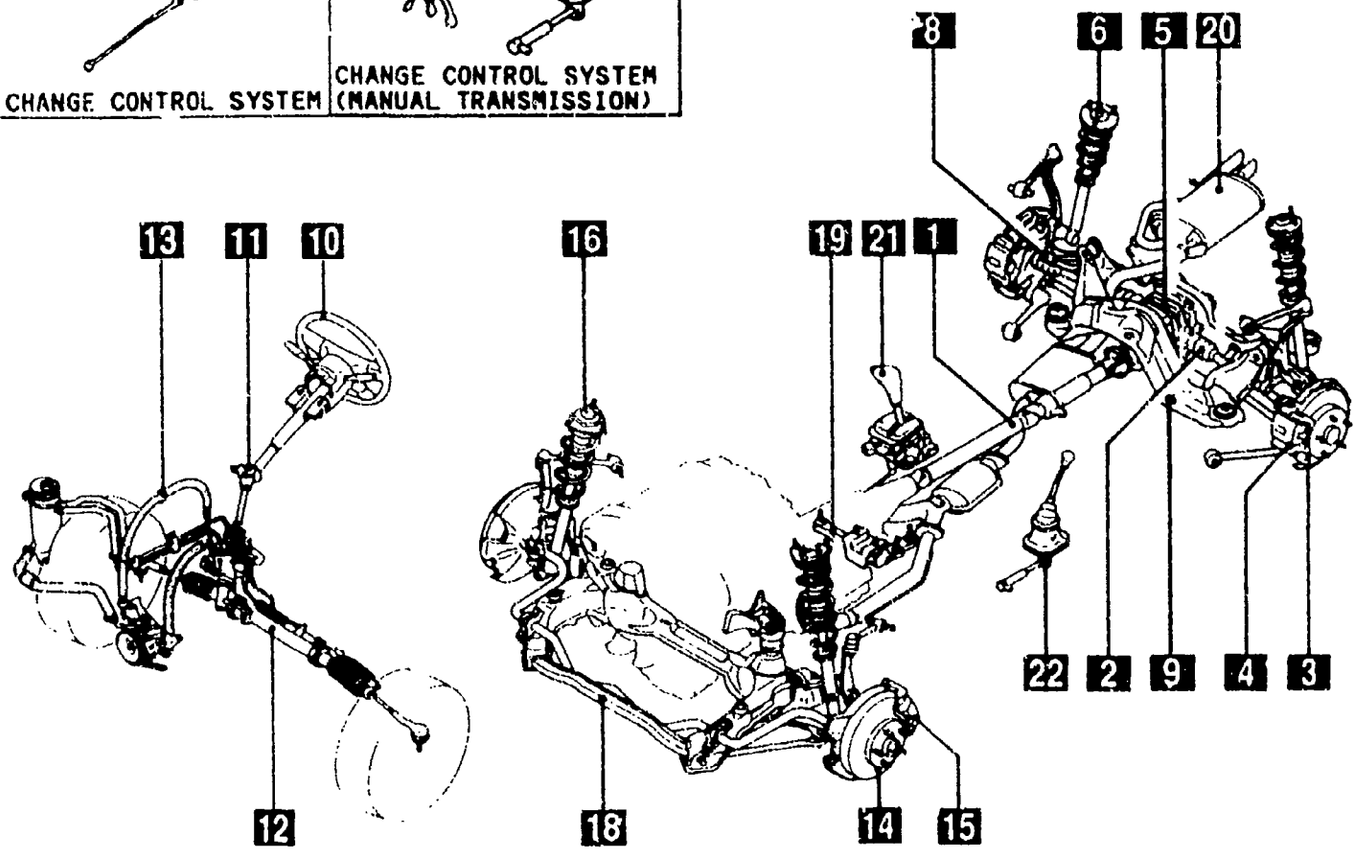


As this illustration is prepared to be applicable to all models, some parts are different in specifications from parts listed in this parts Catalog.

**7**

**8** 2810

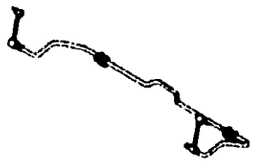

REAR STABILIZER

**9** 2830

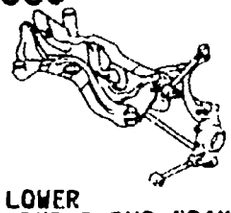

REAR LOWER ARMS & SUB FRAME

**10** 3200

STEERING WHEEL

**11** 3210

STEERING COLUMN & SHAFTS

**12** 3220

STEERING GEAR

**13** 3240

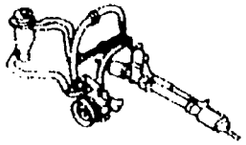

POWER STEERING SYSTEM (FRONT)

**14** 3300

FRONT AXLE

**15** 3310

FRONT BRAKE MECHANISMS

**16** 3400

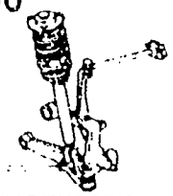

FRONT SUSPENSION MECHANISMS

**17**

**18** 3410

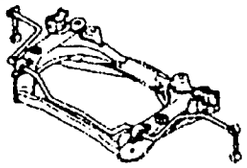

CROSSMEMBER & STABILIZER

**19** 3900

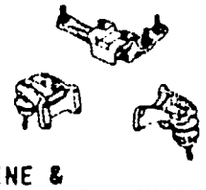

ENGINE & T/MISSION MOUNTINGS

# PICTORIAL INDEX

**1** 3700

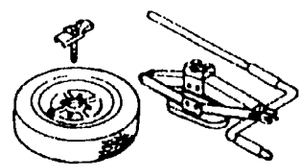

TIRES & JACK

**2** 4140

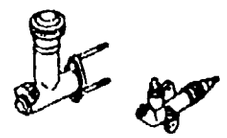

CLUTCH RELEASE & MASTER CYLINDERS

**3** 4145

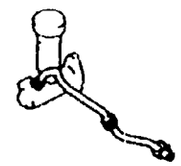

CLUTCH PIPINGS

**4** 4160

ACCELERATOR CONTROL SYSTEM

**5** 4200

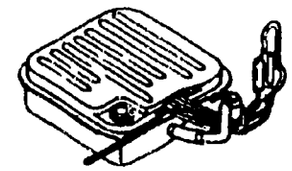

FUEL TANK

**6** 4210

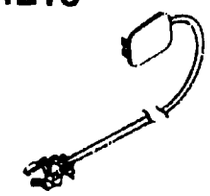

FUEL LID OPENER

## CHASSIS (2/2)

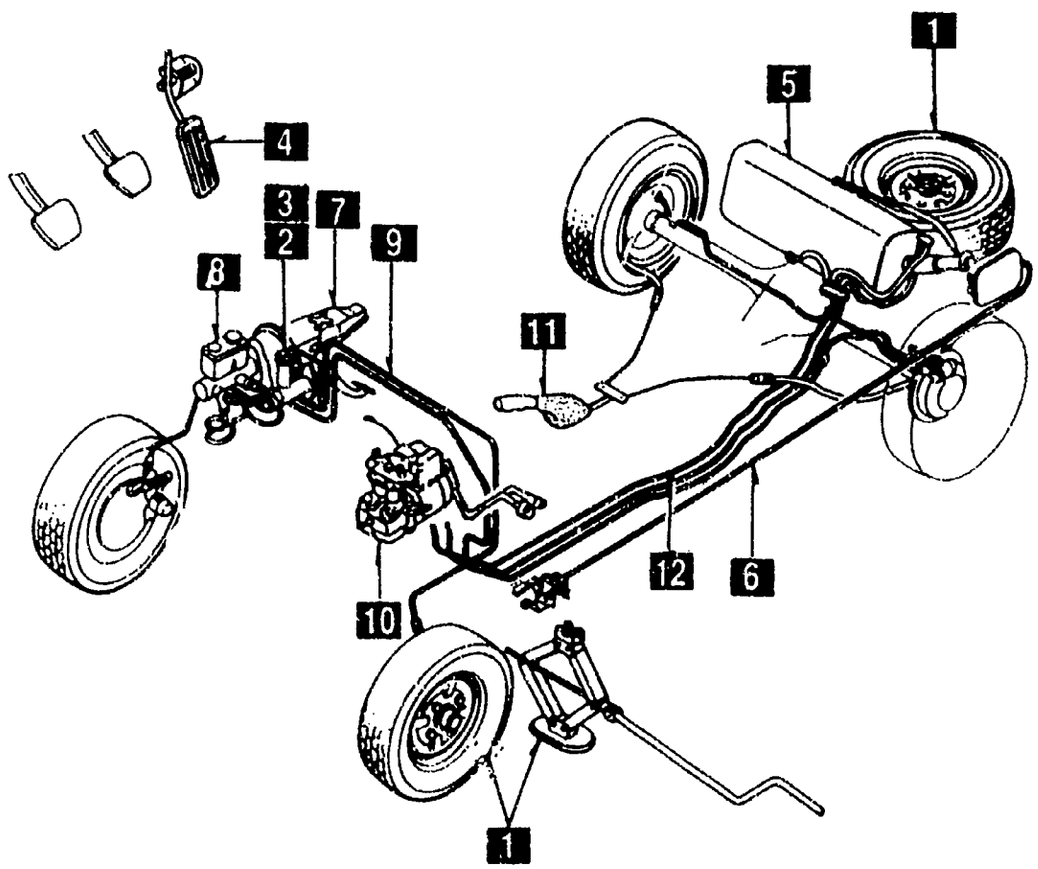


As this illustration is prepared to be applicable to all models, some parts are different in specifications from parts listed in this parts Catalog.

**7** 4300

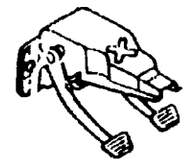

CLUTCH & BRAKE PEDALS

**8** 4340

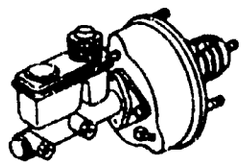

BRAKE MASTER CYLINDER & POWER BRAKE

**9** 4360

BRAKE PIPINGS

**10** 4370

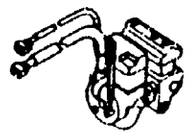

ANTILOCK BRAKE SYSTEM

**12** 4500

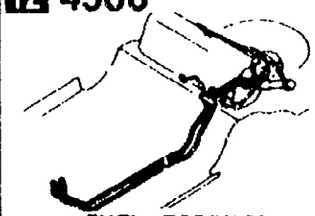

FUEL PIPINGS

**11** 4400

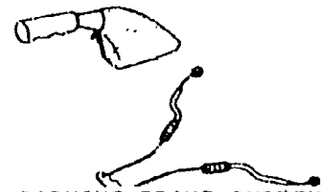

PARKING BRAKE SYSTEM

# PICTORIAL INDEX

**1** 0900

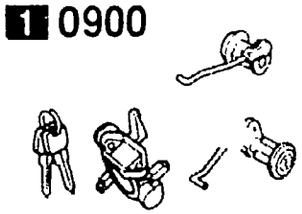

KEY SETS

**2** 5100

HEAD LAMPS

**3** 5103

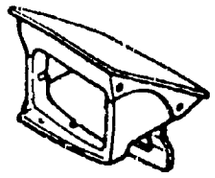

HEAD LAMP RETRACTORS

**4** 5105

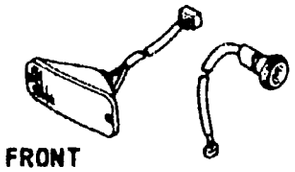

FRONT COMBINATION LAMPS

**5** 5110

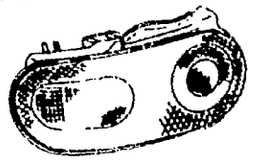

REAR COMBINATION LAMPS

**6** 5120

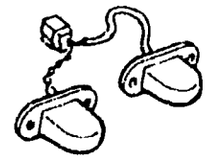

LICENSE LAMPS

**7** 5125

INTERIOR LAMPS

**8** 6600

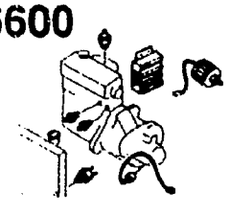

SWITCHES & RELAYS (ENGINE)

**9** 6630

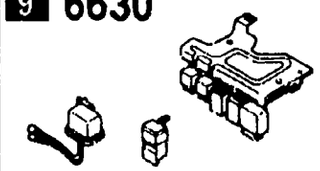

RELAYS & UNIT (BODY)

**10** 6635

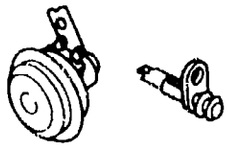

DOOR SWITCH & HORNS

**11** 6700

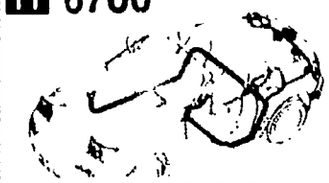

WIRING HARNESSES (FRONT & REAR)

**12** 6701

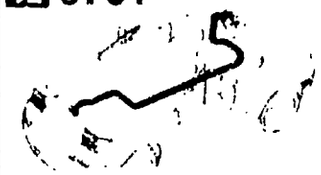

WIRING HARNESSES (ENGINE & T/MISSION)

**13** 6702

WIRING HARNESSES (DASHBOARD)

**14** 6703

WIRING HARNESSES (DOOR/FLOOR/CEILING)

**15** 6704

WIRING HARNESS CLAMPS

**16** 6720

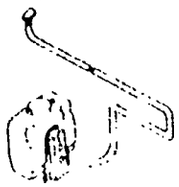

WINDSHIELD WASHER

## BODY (1/4)

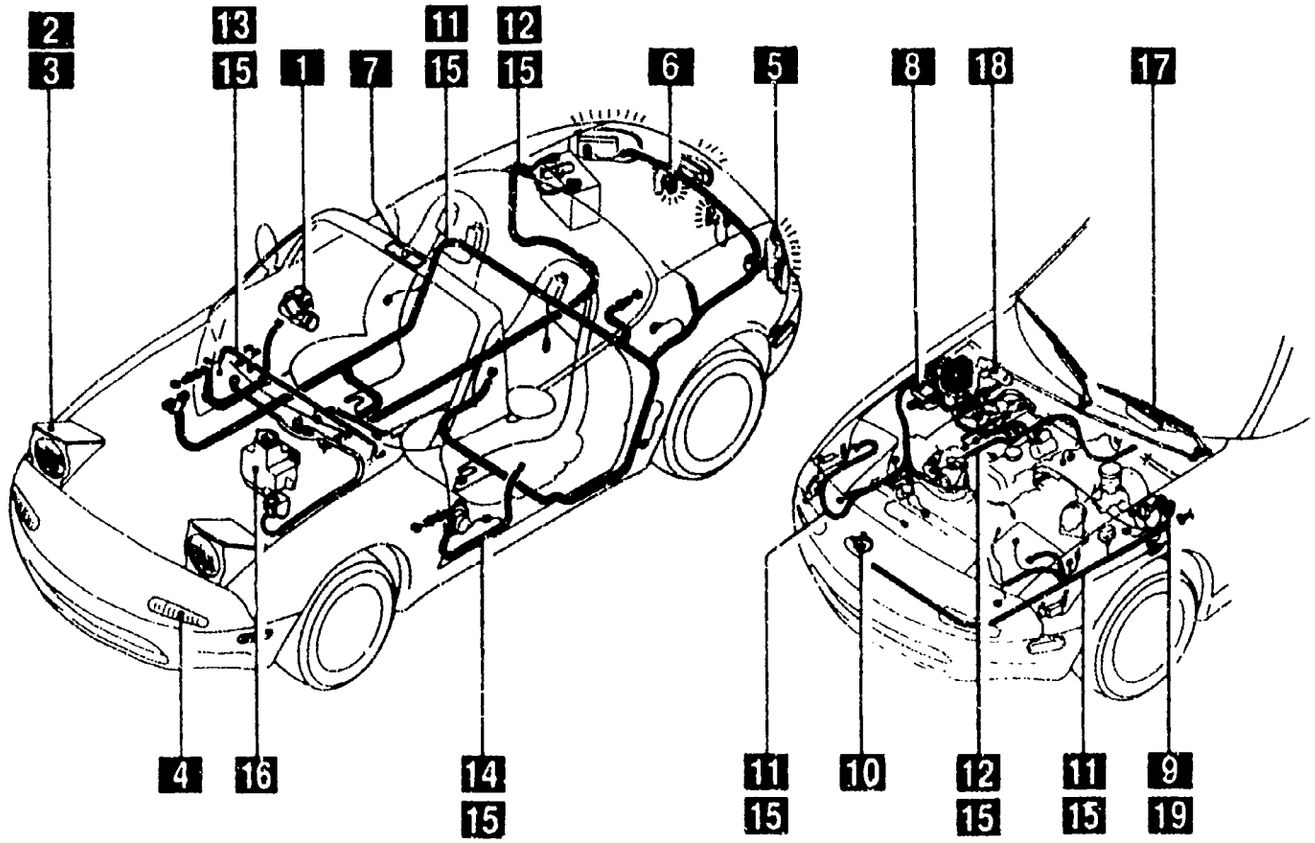


As this illustration is prepared to be applicable to all models, some parts are different in specifications from parts listed in this parts Catalog.

**17** 6730

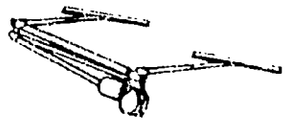

WINDSHIELD WIPERS

**18** 6740

WIPER MOTOR COMPONENTS (FRONT)

**19** 6640

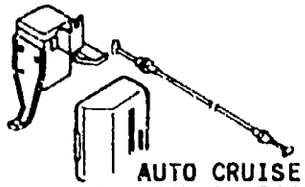

AUTO CRUISE CONTROL SYSTEM

# PICTORIAL INDEX

**1** 5000

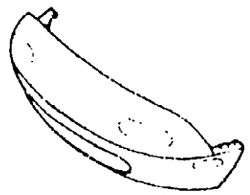

FRONT BUMPER

**2** 5010

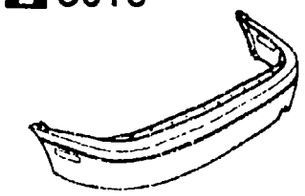

REAR BUMPER

**3** 5030

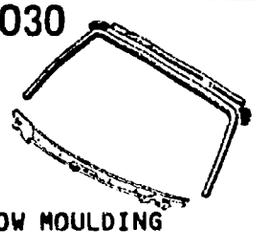

WINDOW MOULDING
& COWL GRILLES

**4** 5170

ORNAMENTS

**5** 5180

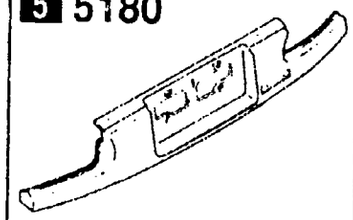

REAR FINISHER

**6** 5230

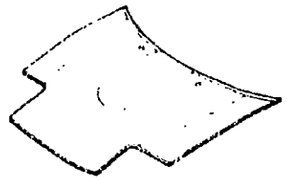

BONNET

**7** 5260

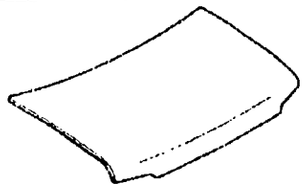

TRUNK LID

**8** 5310

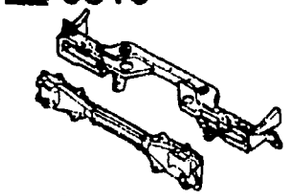

FRONT PANELS

**9** 5320

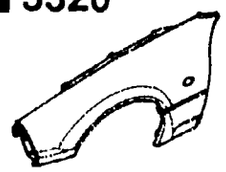

FENDER
& WHEEL APRON PANELS

**10** 5330

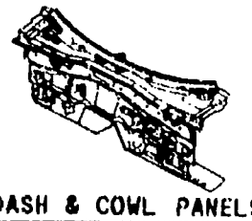

DASH & COWL PANELS

**11** 5340

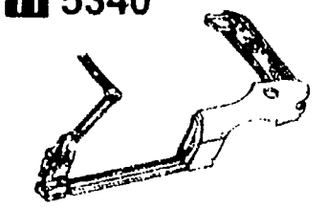

SIDE PANELS

**12** 5370

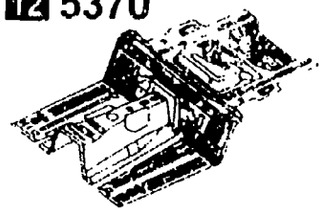

FLOOR PANELS

**13** 5380

FLOOR ATTACHMENTS
(HOLE COVERS)

**14** 5390

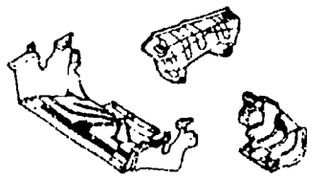

FLOOR ATTACHMENTS

**15** 5800

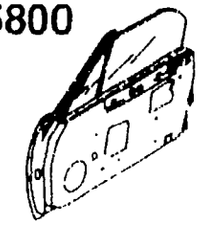

FRONT DOORS

**16** 5830

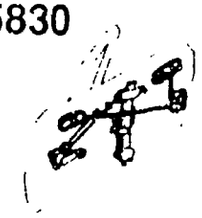

FRONT DOOR MECHANISMS

**17** 5840

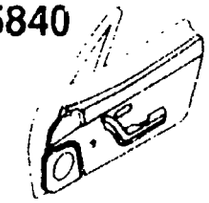

FRONT DOOR TRIMS
& RELATED PARTS

**18** 6300

WINDOW GLASSES

**19** 6330

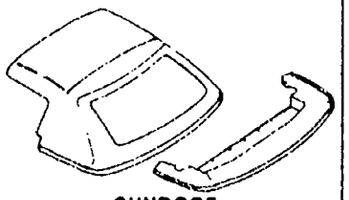

SUNROOF

## BODY (2/4)

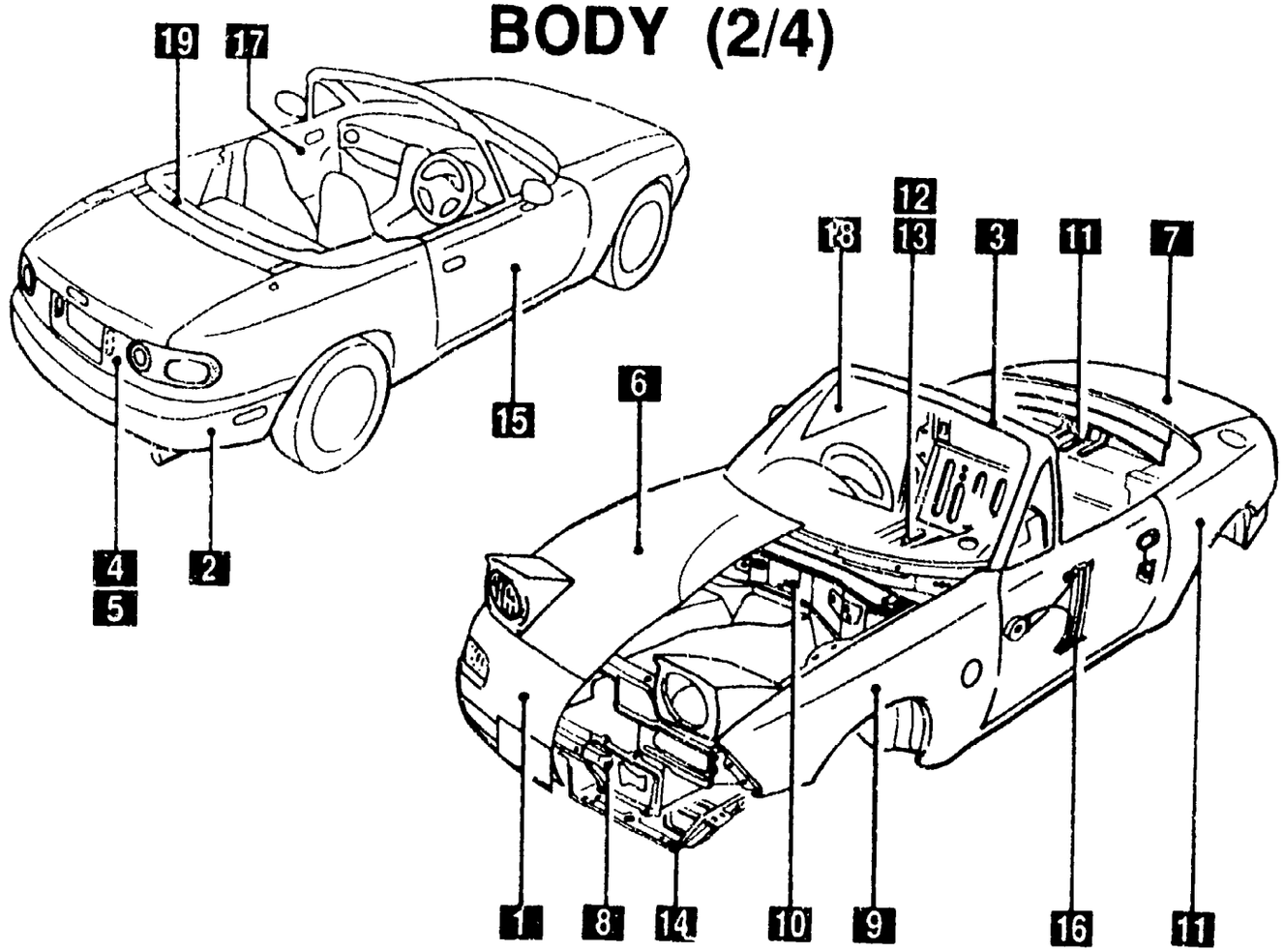

# PICTORIAL INDEX

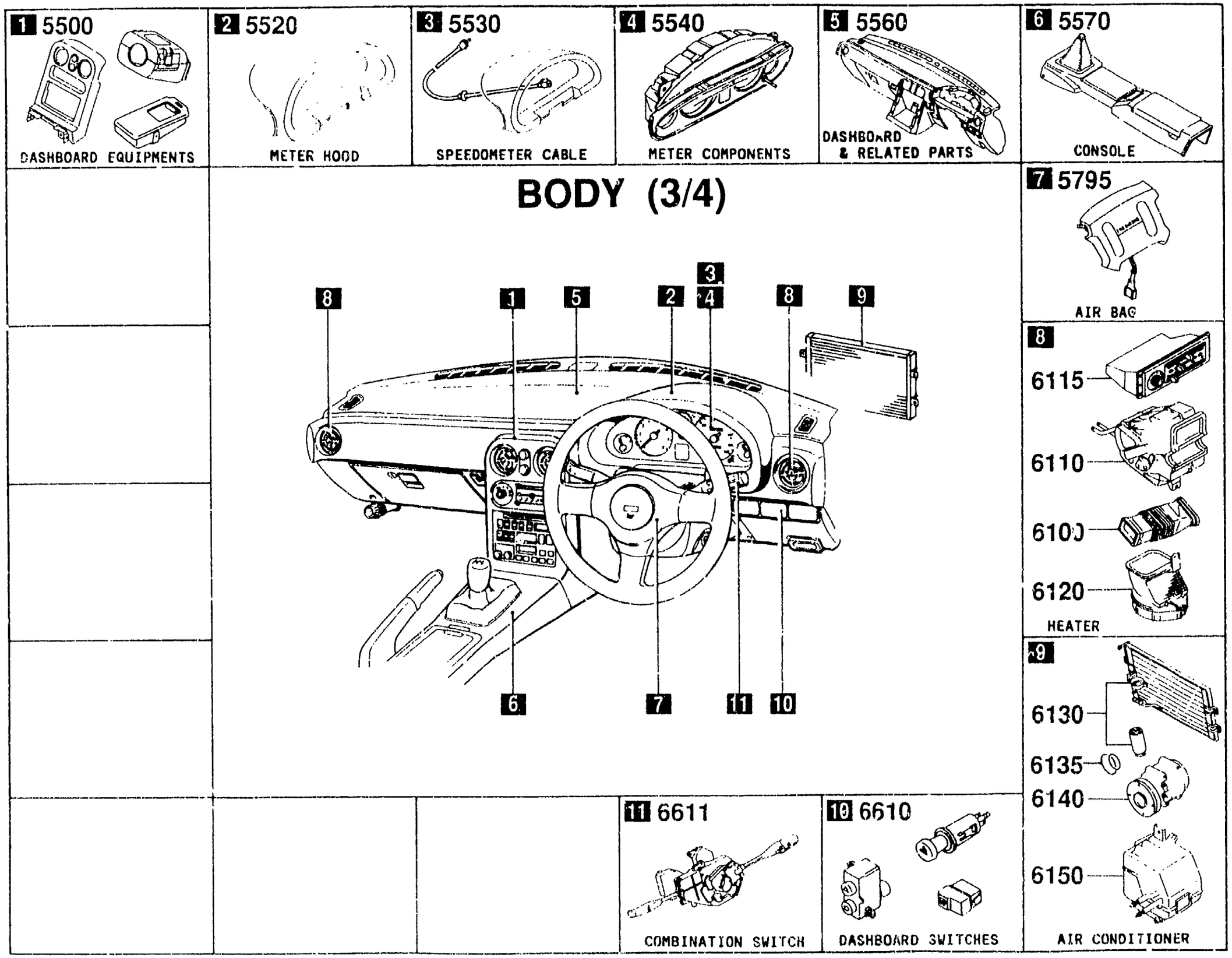

# PICTORIAL INDEX

**1** 5580

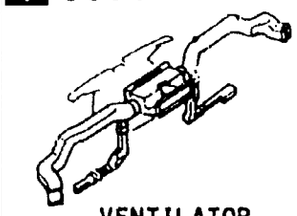

VENTILATOR

**2** 5700

SEATS

**3** 5790

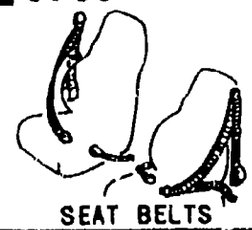

SEAT BELTS

**4** 6680

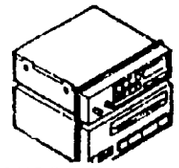

AUDIO SYSTEMS (RADIO & TAPE DECK)

**5** 6682

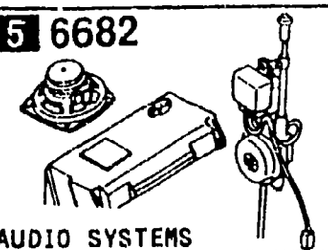

AUDIO SYSTEMS (ANTENNA & SPEAKER)

**6** 6820

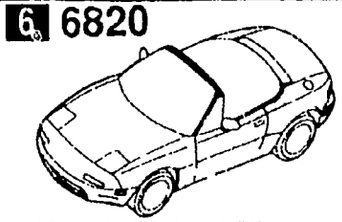

FRONT HEADER TRIM & PILLAR TRIMS

**7** 6840

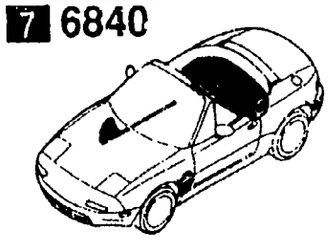

TRIMS & SCUFF PLATES

**8** 6860

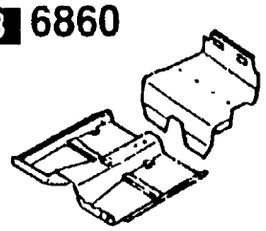

FLOOR MATS & PADS

**9** 6870

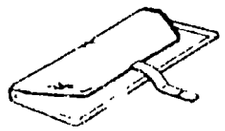

SERVICE TOOLS

**10** 6900

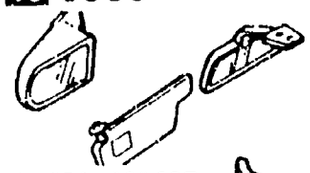

VISORS, ASSIST HANDLES & MIRRORS

## BODY (4/4)

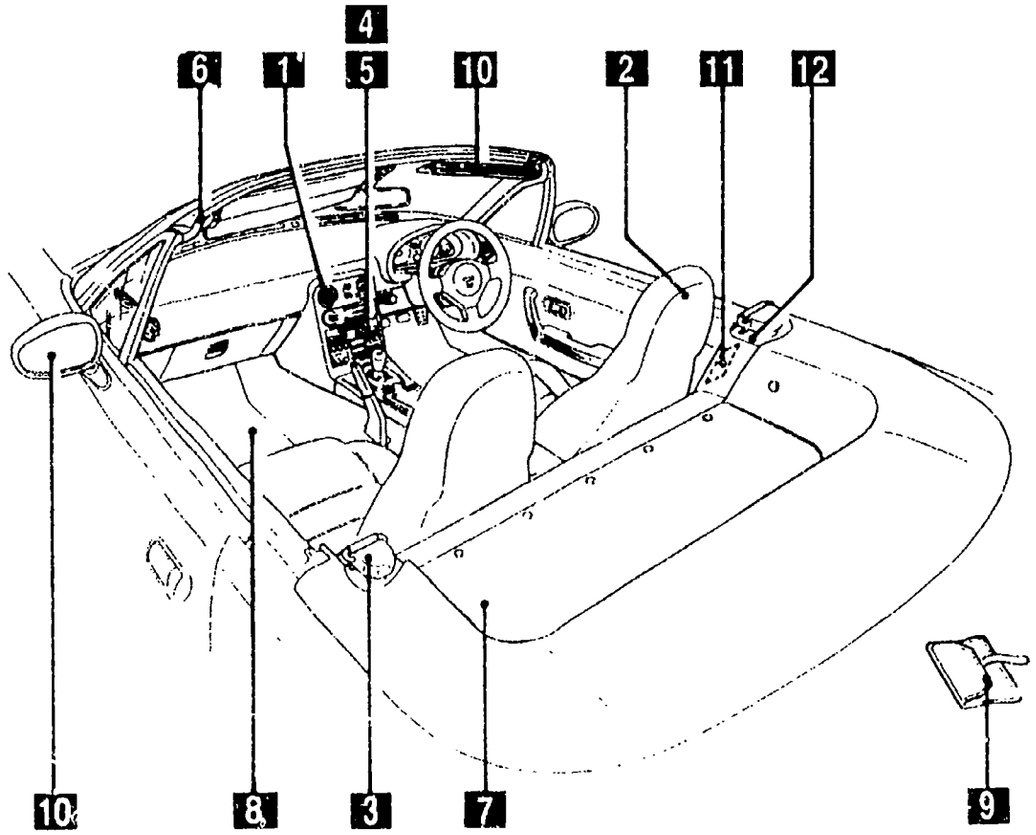


As this illustration is prepared to be applicable to all models, some parts are different in specifications from parts listed in this parts Catalog.

**12** 7250

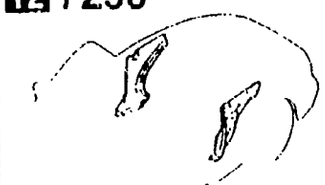

QUARTER WINDOW & TRIMS

**11** 6930

CAUTION PLATES & LABELS

SECTION NAME INDEX (ENGINE)

| LO.NO | SEC.NO | SECTION NAME | LO.NO | SEC.NO | SECTION NAME | LO.NO | SEC.NO | SECTION NAME |
|---|---|---|---|---|---|---|---|---|
| 1-C03 | 1000 | ENGINE & GASKET SETS | 1-K09 | 1950 | AUTOMATIC TRANSMISSION MANUAL LINKAGE SYSTEM | | | |
| 1-E03 | 1010 | CYLINDER HEAD & COVER | 1-M09 | 1960 | AUTOMATIC TRANSMISSION GASKET & SEAL KIT | | | |
| 1-H03 | 1030 | CYLINDER BLOCK | | | | | | |
| 1-J03 | 1040 | OIL PAN & TIMING COVER | | | | | | |
| 1-L03 | 1100 | PISTON, CRANKSHAFT & FLYWHEEL | | | | | | |
| 1-C04 | 1200 | VALVE SYSTEM | | | | | | |
| 1-E04 | 1300 | INLET MANIFOLD | | | | | | |
| 1-F04 | 1310 | EXHAUST MANIFOLD | | | | | | |
| 1-G04 | 1320 | FUEL SYSTEM | | | | | | |
| 1-I04 | 1325 | FUEL DISTRIBUTOR | | | | | | |
| 1-J04 | 1330 | AIR CLEANER | | | | | | |
| 1-L04 | 1364 | THROTTLE BODY | | | | | | |
| 1-M04 | 1370 | EMISSION CONTROL SYSTEM (INLET SIDE) | | | | | | |
| 1-C05 | 1400 | OIL PUMP & FILTER | | | | | | |
| 1-E05 | 1500 | COOLING SYSTEM | | | | | | |
| 1-H05 | 1580 | BRACKET, PULLEY & BELT | | | | | | |
| 1-C06 | 1600 | CLUTCH DISC & COVER | | | | | | |
| 1-D06 | 1700 | MANUAL TRANSMISSION CASE | | | | | | |
| 1-E06 | 1710 | MANUAL TRANSMISSION GEARS | | | | | | |
| 1-J06 | 1720 | MANUAL TRANSMISSION CHANGE CONTROL SYSTEM | | | | | | |
| 1-M06 | 1800 | ENGINE ELECTRICAL SYSTEM | | | | | | |
| 1-C07 | 1830 | ALTERNATOR | | | | | | |
| 1-E07 | 1840 | STARTER (MT) | | | | | | |
| 1-G07 | 1840 A | STARTER (AT) | | | | | | |
| 1-I07 | 1850 | BATTERY | | | | | | |
| 1-J07 | 1910 | AUTOMATIC TRANSMISSION TORQUE CONVERTER, OIL PUMP & PIPINGS | | | | | | |
| 1-M07 | 1920 | AUTOMATIC TRANSMISSION CASE & MAIN CONTROL SYSTEM | | | | | | |
| 1-F08 | 1925 | AUTOMATIC TRANSMISSION CONTROL VALVE | | | | | | |
| 1-M08 | 1930 | AUTOMATIC TRANSMISSION CLUTCHES & PLANETARY GEARS | | | | | | |
| 1-H09 | 1940 | AUTOMATIC TRANSMISSION GOVERNOR, LOW & REVERSE PISTON | | | | | | |

SECTION NAME INDEX (CHASSIS)

| LO.NO | SEC.NO | SECTION NAME | LO.NO | SEC.NO | SECTION NAME | LO.NO | SEC.NO | SECTION NAME |
|---|---|---|---|---|---|---|---|---|
| 1-C11 | 2505 | REAR PROPELLER SHAFT | 1-F16 | 4340 | BRAKE MASTER CYLINDER & POWER BRAKE (W/O ANTILOCK BRAKE) | | | |
| 1-D11 | 2550 | REAR DRIVE SHAFT | | | | | | |
| 1-F11 | 2600 | REAR AXLE | 1-H16 | 4340 A | BRAKE MASTER CYLINDER & POWER BRAKE (W/ANTILOCK BRAKE) | | | |
| 1-G11 | 2610 | REAR BRAKE MECHANISMS | | | | | | |
| 1-J11 | 2710 | REAR DIFFERENTIALS (NORMAL DIFF.) | 1-K16 | 4360 | BRAKE PIPINGS (W/O ANTI LOCK BRAKE SYSTEM) | | | |
| 1-C12 | 2710 A | REAR DIFFERENTIALS (LIMITED SLIP DIFF.) | 1-M16 | 4360 A | BRAKE PIPINGS (ANTI LOCK BRAKE SYSTEM) | | | |
| 1-G12 | 2800 | REAR SUSPENSION MECHANISMS | 2-C03 | 4370 | ANTILOCK BRAKE SYSTEM | | | |
| 1-H12 | 2810 | REAR STABILIZER | 2-E03 | 4400 | PARKING BRAKE SYSTEM | | | |
| 1-I12 | 2830 | REAR LOWER ARMS & SUB FRAME | 2-G03 | 4500 | FUEL PIPINGS | | | |
| 1-K12 | 3200 | STEERING WHEEL | 2-I03 | 4600 | CHANGE CONTROL SYSTEM (AT) | | | |
| 1-L12 | 3210 | STEERING COLUMN & SHAFTS | | | | | | |
| 1-M12 | 3220 | STEERING GEAR (W/O POWER STEERING) | | | | | | |
| 1-C13 | 3220 A | STEERING GEAR (W/POWER STEERING) | | | | | | |
| 1-H13 | 3240 | POWER STEERING SYSTEM | | | | | | |
| 1-K13 | 3300 | FRONT AXLE (W/O ANTILOCK BRAKE) | | | | | | |
| 1-L13 | 3300 A | FRONT AXLE (W/ANTILOCK BRAKE) | | | | | | |
| 1-M13 | 3310 | FRONT BRAKE MECHANISMS | | | | | | |
| 1-N13 | 3400 | FRONT SUSPENSION MECHANISMS | | | | | | |
| 1-E14 | 3410 | CROSSMEMBER & STABILIZER | | | | | | |
| 1-F14 | 3700 | TIRES & JACK | | | | | | |
| 1-C15 | 3900 | ENGINE & T/MISSION MOUNTINGS | | | | | | |
| 1-D15 | 4000 | EXHAUST SYSTEM | | | | | | |
| 1-F15 | 4140 | MANUAL TRANSMISSION CLUTCH RELEASE & MASTER CYLINDERS | | | | | | |
| 1-G15 | 4145 | MANUAL TRANSMISSION CLUTCH PIPINGS | | | | | | |
| 1-H15 | 4160 | ACCELERATOR CONTROL SYSTEM | | | | | | |
| 1-I15 | 4200 | FUEL TANK | | | | | | |
| 1-L15 | 4210 | FUEL LID OPENER | | | | | | |
| 1-M15 | 4300 | MANUAL TRANSMISSION CLUTCH & BRAKE PEDALS | | | | | | |
| 1-D16 | 4300A | AUTOMATIC TRANSMISSION BRAKE PEDAL | | | | | | |

SECTION NAME INDEX (BODY)

| LO.NO | SEC.NO | SECTION NAME | LO.NO | SEC.NO | SECTION NAME | LO.NO | SEC.NO | SECTION NAME |
|---|---|---|---|---|---|---|---|---|
| 2-C05 | 0900 | KEY SETS | 2-C14 | 6100 | HEATER | 3-D06 | 6900 | SUN VISORS, ASSIST HANDLES & MIRRORS |
| 2-E05 | 5000 | FRONT BUMPER | 2-D14 | 6110 | HEATER UNIT COMPONENTS | 3-G06 | 6930 | CAUTION PLATES & LABELS |
| 2-H05 | 5010 | REAR BUMPER | 2-E14 | 6115 | HEATER CONTROL COMPONENTS | 3-I06 | 7250 | QUARTER WINDOW & TRIMS |
| 2-J05 | 5030 | WINDOW MOULDING & COWL GRILLES | 2-G14 | 6120 | HEATER BLOWER COMPONENTS | | | |
| 2-K05 | 5100 | HEAD LAMPS | 2-H14 | 6130 | AIR CONDITIONER | | | |
| 2-L05 | 5103 | HEAD LAMP RETRACTORS | 2-L14 | 6135 | AIR CONDITIONING COOLING PIPE O-RING | | | |
| 2-C06 | 5105 | FRONT COMBINATION LAMPS | 2-M14 | 6140 | AIR CONDITIONING COMPRESSOR COMPONENTS | | | |
| 2-E06 | 5110 | REAR COMBINATION LAMPS | | | | | | |
| 2-H06 | 5120 | LICENSE LAMPS | 2-C15 | 6150 | AIR CONDITIONING COOLING UNIT | | | |
| 2-I06 | 5125 | INTERIOR LAMPS | 2-D15 | 6300 | WINDOW GLASSES | | | |
| 2-J06 | 5170 | ORNAMENTS | 2-E15 | 6330 | SUN ROOF | | | |
| 2-K06 | 5180 | REAR FINISHER | 2-E16 | 6600 | ENGINE SWITCHES & RELAYS | | | |
| 2-L06 | 5230 | BONNET | 2-J16 | 6610 | DASHBOARD SWITCHES | | | |
| 2-N06 | 5260 | TRUNK LID | 2-L16 | 6611 | COMBINATION SWITCH | | | |
| 2-D07 | 5310 | FRONT PANELS | 2-M16 | 6630 | BODY RELAYS & UNIT | | | |
| 2-E07 | 5320 | FENDER & WHEEL APRON PANELS | 3-C03 | 6635 | DOOR SWITCH & HORNS | | | |
| 2-H07 | 5330 | DASH & COWL PANELS | 3-D03 | 6640 | AUTO CRUISE CONTROL SYSTEM | | | |
| 2-I07 | 5340 | SIDE PANELS | 3-E03 | 6680 | AUDIO SYSTEMS (RADIO & TAPE DECK) | | | |
| 2-N07 | 5370 | FLOOR PANELS | 3-K03 | 6682 | AUDIO SYSTEMS (ANTENNA & SPEAKER) | | | |
| 2-E08 | 5380 | FLOOR ATTACHMENTS (HOLE COVERS) | 3-N03 | 6700 | FRONT & REAR WIRING HARNESSES | | | |
| 2-F08 | 5390 | FLOOR ATTACHMENTS | 3-F04 | 6701 | ENGINE & TRANSMISSION WIRING HARNESSES | | | |
| 2-C09 | 5500 | DASHBOARD EQUIPMENTS | 3-G04 | 6702 | DASHBOARD WIRING HARNESSES | | | |
| 2-F09 | 5520 | METER HOOD | 3-H04 | 6703 | DOOR, FLOOR & CEILING WIRING HARNESSES | | | |
| 2-G09 | 5530 | SPEEDOMETER CABLE | 3-I04 | 6704 | WIRING HARNESS CLAMPS | | | |
| 2-H09 | 5540 | METER COMPONENTS | 3-L04 | 6720 | WINDSHIELD WASHER (W/O ANTI LOCK BRAKE) | | | |
| 2-K09 | 5560 | DASHBOARD & RELATED PARTS | 3-N04 | 6720 A | WINDSHIELD WASHER (W/ANTI LOCK BRAKE) | | | |
| 2-N09 | 5570 | CONSOLE | 3-E05 | 6730 | WINDSHIELD WIPERS | | | |
| 2-E10 | 5580 | VENTILATOR | 3-G05 | 6740 | WIPER MOTOR COMPONRNTS | | | |
| 2-G10 | 5700 | SEATS | 3-H05 | 6820 | FRONT HEADER TRIM & PILLAR TRIMS | | | |
| 2-I12 | 5790 | SEAT BELTS | 3-I05 | 6840 | TRIMS & SCUFF PLATES | | | |
| 2-J12 | 5795 | AIR BAG | 3-L05 | 6860 | FLOOR MATS & PADS | | | |
| 2-K12 | 5800 | FRONT DOORS | 3-C06 | 6870 | SERVICE TOOLS | | | |
| 2-N12 | 5830 | FRONT DOOR MECHANISMS | | | | | | |
| 2-F13 | 5840 | FRONT DOOR TRIMS & RELATED PARTS | | | | | | |

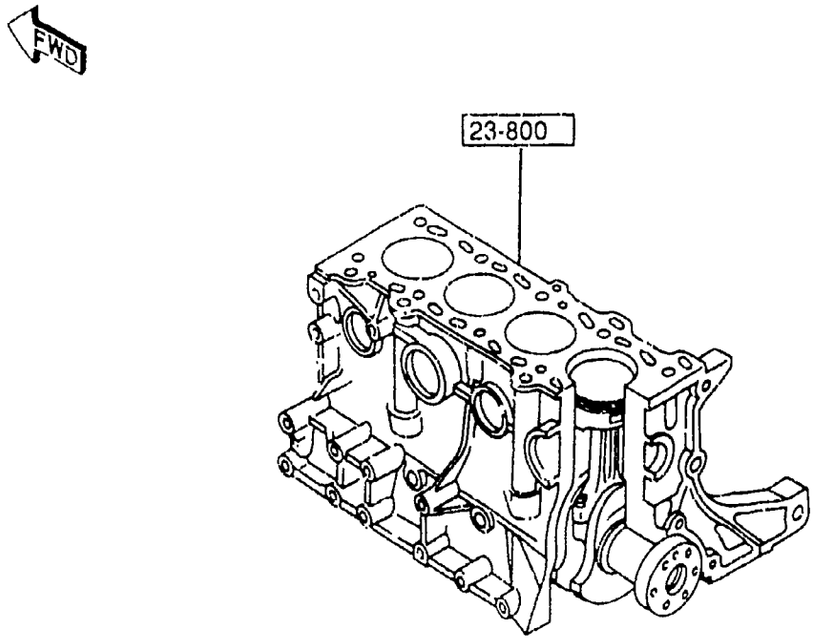


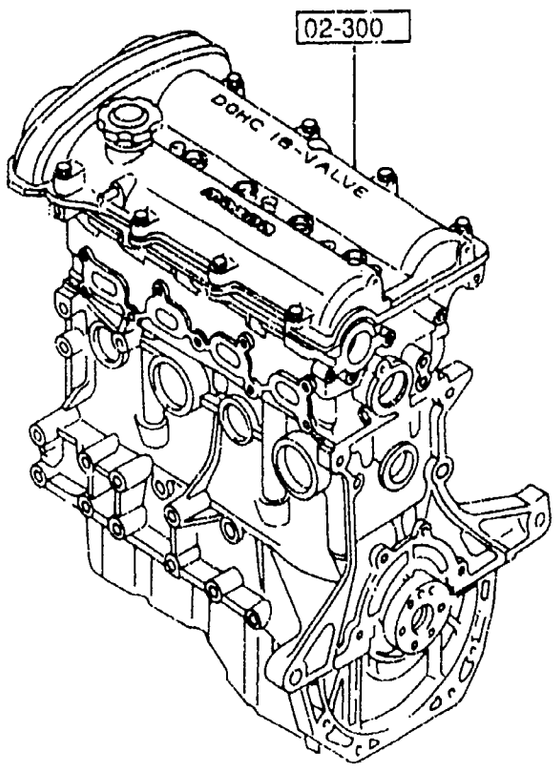






10-271S

| | |
|---|---|
| 1-SEAL, VALVE | (8) |
| 2-SEAL, VALVE | (8) |
| 3-GASKET, HEAD COVER | (1) |
| 4-GASKET, CYLINDER HEAD | (1) |
| 5-GASKET, OIL PAN | (1) |
| 6-GASKET, OIL PAN | (1) |
| 7-GASKET (L) | (1) |
| 8-GASKET (INN), TIMING BELT (L) | (1) |
| 9-GASKET (C), TIMING BELT (L) | (1) |
| 10-GASKET, T. BELT, COVER-C. | (1) |
| 11-RUBBER, SEAL-SEAL PLATE | (1) |
| 12-SEAL, OIL | (1) |
| 13-SEAL, OIL | (2) |
| 14-SEAL, OIL | (1) |
| 15-GASKET, IN. MANIFOLD | (1) |
| 16-GASKET, EX. MANIFOLD | (1) |
| 17-RING, 'O' | (1) |
| 18-GASKET, WATER PUMP | (1) |
| 19-GASKET, W. PUMP INLET | (1) |
| 20-GASKET, THERMOSTAT COVER | (1) |
| 21-RING, 'O' | (1) |

10-235S

| | |
|---|---|
| 1-SEAL, VALVE | (8) |
| 2-SEAL, VALVE | (8) |
| 3-GASKET, HEAD COVER | (1) |
| 4-GASKET, CYLINDER HEAD | (1) |
| 12-SEAL, OIL | (1) |
| 13-SEAL, OIL | (2) |
| 15-GASKET, IN. MANIFOLD | (1) |
| 16-GASKET, EX. MANIFOLD | (1) |
| 20-GASKET, THERMOSTAT COVER | (1) |

02-310S

| | |
|---|---|
| 15-GASKET, IN. MANIFOLD | (1) |
| 16-GASKET, EX. MANIFOLD | (1) |
| 19-GASKET, W. PUMP INLET | (1) |
| 20-GASKET, THERMOSTAT COVER | (1) |

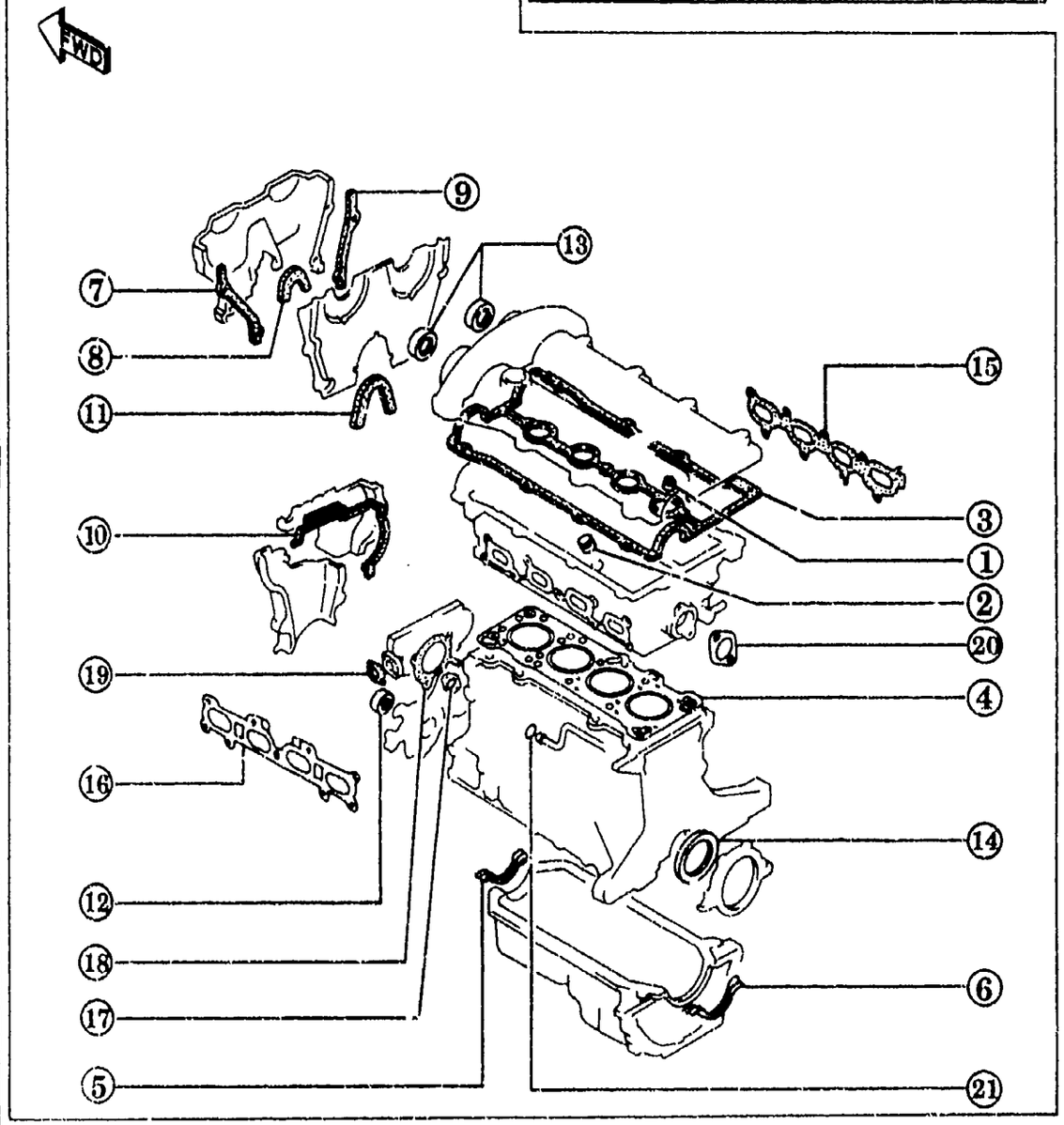

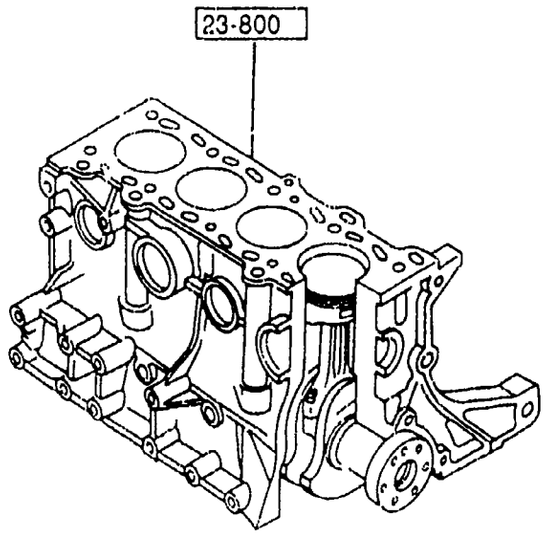


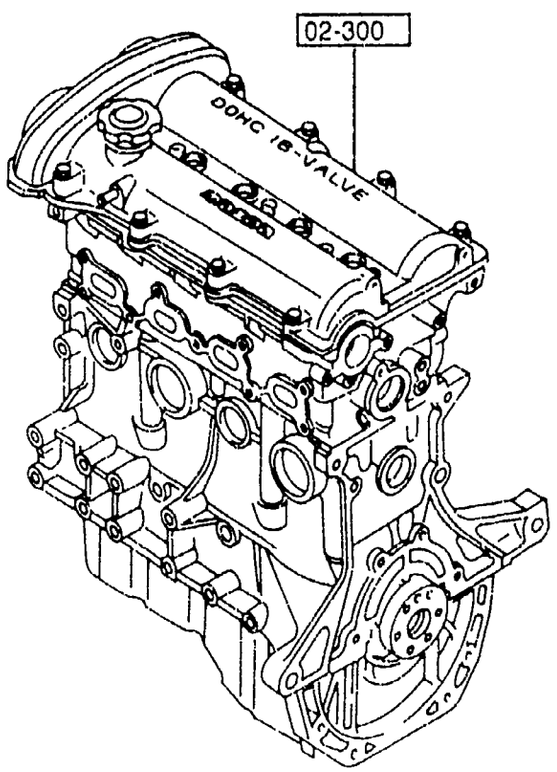


## 1000 -1 * ENGINE & GASKET SETS

| PART NO. | QTY | MODEL/RESTRICTION | MODEL/RESTRICTION | MODEL/RESTRICTION | FROM-TO |
|---|---|---|---|---|---|
| +---------+ \| 02-300 \| +---------+ | | ENGINE,PARTIAL | | | |
| BPE8-02-300 | 1 | ('95 MODEL) | | | |
| BPS1-02-300 | 1 | ('96 MODEL) | | | |
| +---------+ \| 02-310S \| +---------+ | | GASKET SET,PARTIAL E NGINE | | | |
| *8ABA-02-310 | 1 | | | | |
| +---------+ \| 10-235S \| +---------+ | | GASKET SET,CYL. HEAD | | | |
| 8AN2-10-235 A (8AN2-10-235A) | 1 | | | | -5801 |
| *8AN2-10-235A | 1 | | | | 5801- |
| +---------+ \| 10-271S \| +---------+ | | GASKET SET,ENGINE | | | |
| 8AN2-10-271 | 1 | | | | -4901 |
| 8AN2-10-271A A (8AN2-10-271B) | 1 | | | | 4901-5801 |
| 8AN2-10-271B | 1 | | | | 5801- |
| +---------+ \| 23-800 \| +---------+ | | ENGINE,SHORT | | | |
| BPF1-02-200A | 1 | | | | |

4901 NA35* -602618
5801 NA3** -700842

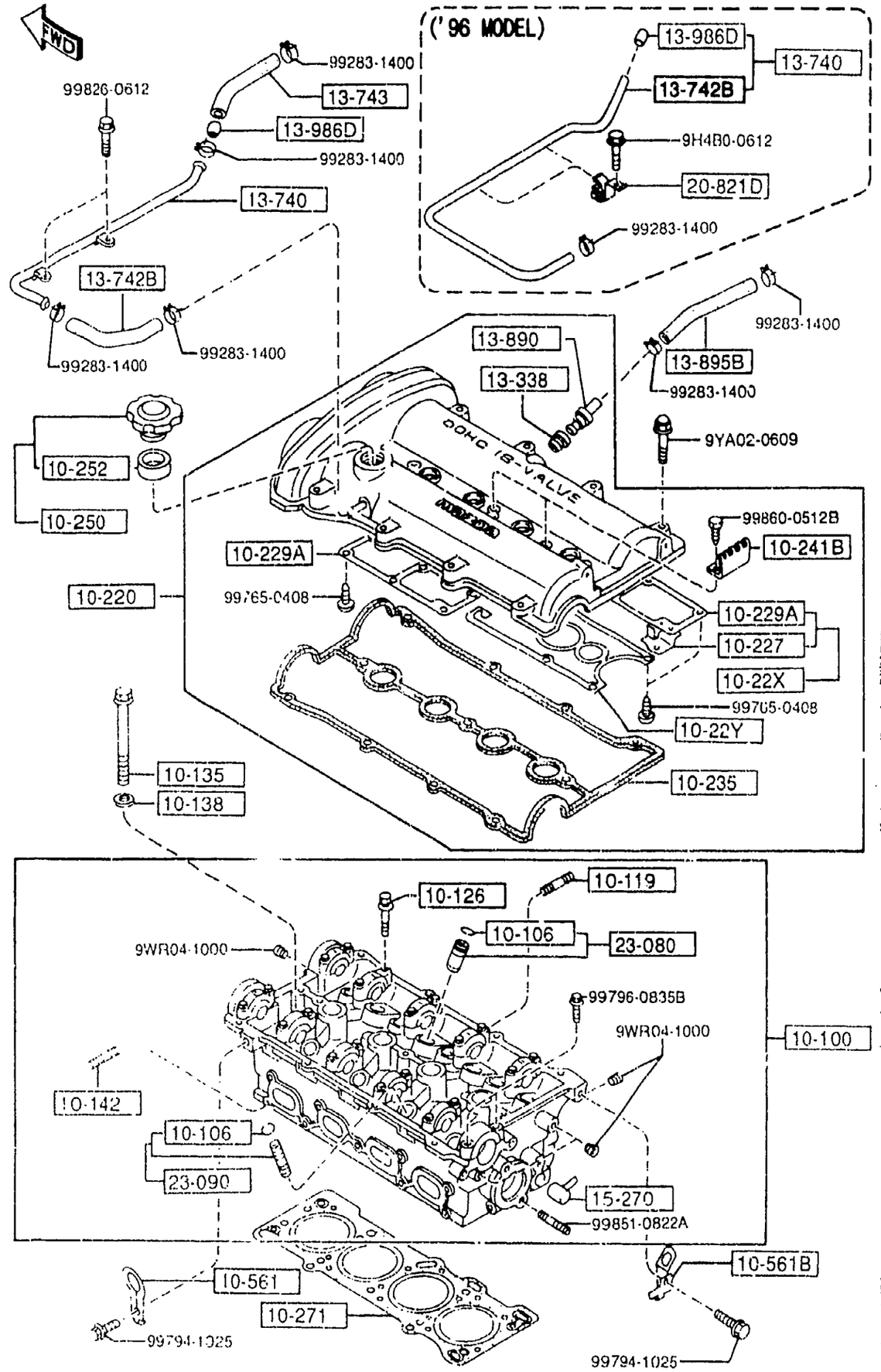


AUNA05

## 1010 -1 CYLINDER HEAD & COVER

| PART NO. | QTY | MODEL/RESTRICTION | MODEL/RESTRICTION | MODEL/RESTRICTION | FROM-TO |
|---|---|---|---|---|---|
| 10-100 | | HEAD,CYLINDER | | | |
| BPL3-10-100A | 1 | | | | |
| 10-106 | | CLIP,VALVE GUIDE | | | |
| B66U-10-106 | 16 | | | | |
| 10-119 | | STUD | | | |
| FE4J-13-146 | 9 | | | | |
| 10-126 | | BOLT,CAMSHAFT CAP | | | |
| B660-10-126 | 20 | | | | -5601 |
| KL02-10-126 | 20 | | | | 5601- |
| 10-135 | | BOLT,CYLINDER HEAD | | | |
| B660-10-135A | 10 | | | | |
| 10-138 | | WASHER,PLAIN CYL. HEAD | | | |
| B630-10-138A | 10 | | | | |
| 10-142 | | STUD,EX. MANIFOLD | | | |
| B661-10-104 | 9 | | | | |
| 10-22X | | PLATE,OIL BAFFLE-IN. SIDE | | | |
| B61P-10-22X | 1 | | | | |
| 10-22Y | | PLATE,OIL BAFFLE-EX. | | | |
| B6S7-10-22Y | 1 | | | | |
| 10-220 | | COVER,CYLINDER HEAD | | | |
| BPE8-10-210A | 1 | | | | -4B04 |
| A (BPE8-10-210B) | | | | | |
| BPE8-10-210B | 1 | | | | 4B04-5801 |
| AN(BPE8-10-210C) | | | | | |
| BPE8-10-210C | 1 | | | | 5801- |
| 10-227 | | PLATE,BAFFLE | | | |
| B61P-10-227 | 1 | | | | |
| 10-229A | | PLATE,OIL BAFFLE | | | |
| B6S7-10-225 | 2 | | | | |

4B04 NA35* -606526
5601 NA3** -700001
5801 NA3** -700842

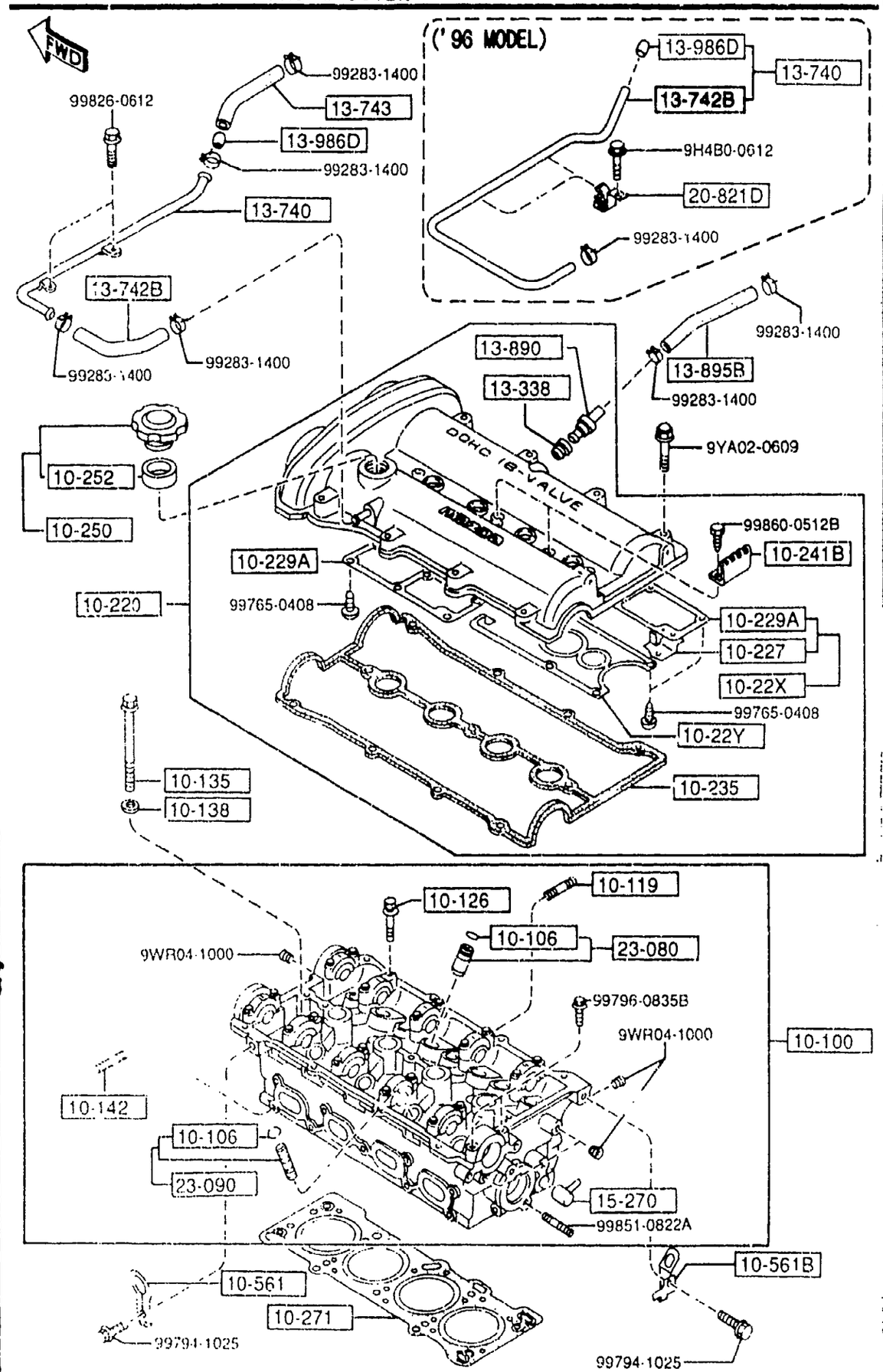


AUNA05



| PART NO. | QTY | MODEL/RESTRICTION | MODEL/RESTRICTION | MODEL/RESTRICTION | FROM-TO |
|---|---|---|---|---|---|
| 10-235 | | GASKET,HEAD COVER | | | |
| BP05-10-235B A (BP05-10-235C) | 1 | | | | -5801 |
| BP05-10-235C | 1 | | | | 5801- |
| 10-241B | | PROTECTOR,HT.CORD-S. TANK | | | |
| B660-10-241 | 2 | | | | -4B04 |
| BPE8-10-241 | 2 | | | | 4B04- |
| 10-250 | | CAP,OIL FILLER | | | |
| 0453-10-250A | 1 | | | | |
| 10-252 | | GASKET | | | |
| 0324-10-252 | 1 | | | | |
| 10-271 | | GASKET,CYLINDER HEAD | | | |
| BP26-10-271 | 1 | NON ASBESTOS | | | |
| 10-561 | | HANGER,ENGINE | | | |
| B660-10-561 | 1 | | | | |
| 10-561B | | HANGER,ENGINE-REAR | | | |
| BPE8-10-566A | 1 | | | | |
| 13-338 | | SEAL,RUBBER | | | |
| E301-13-338A | 1 | | | | |
| 13-740 | | HOSE,VENT.-PURGE CON T. V. | | | |
| BPE8-13-74X | 1 | ('95 MODEL) | | | |
| BPE8-13-740A | 1 | ('96 MODEL) | | | |
| 13-742B | | HOSE,VENTILATION | | | |
| *BPE8-13-742 | 1 | ('96 MODEL) | | | |
| B61P-13-742A | 1 | ('95 MODEL) | | | |
| 13-743 | | HOSE,VENTILATION | | | |
| BPE8-13-743 | 1 | ('95 MODEL) | | | |
| 13-890 | | VALVE,P.C.V. | | | |
| BP05-13-890 | 1 | | | | |

4B04 NA35* -606526
5801 NA3** -700842

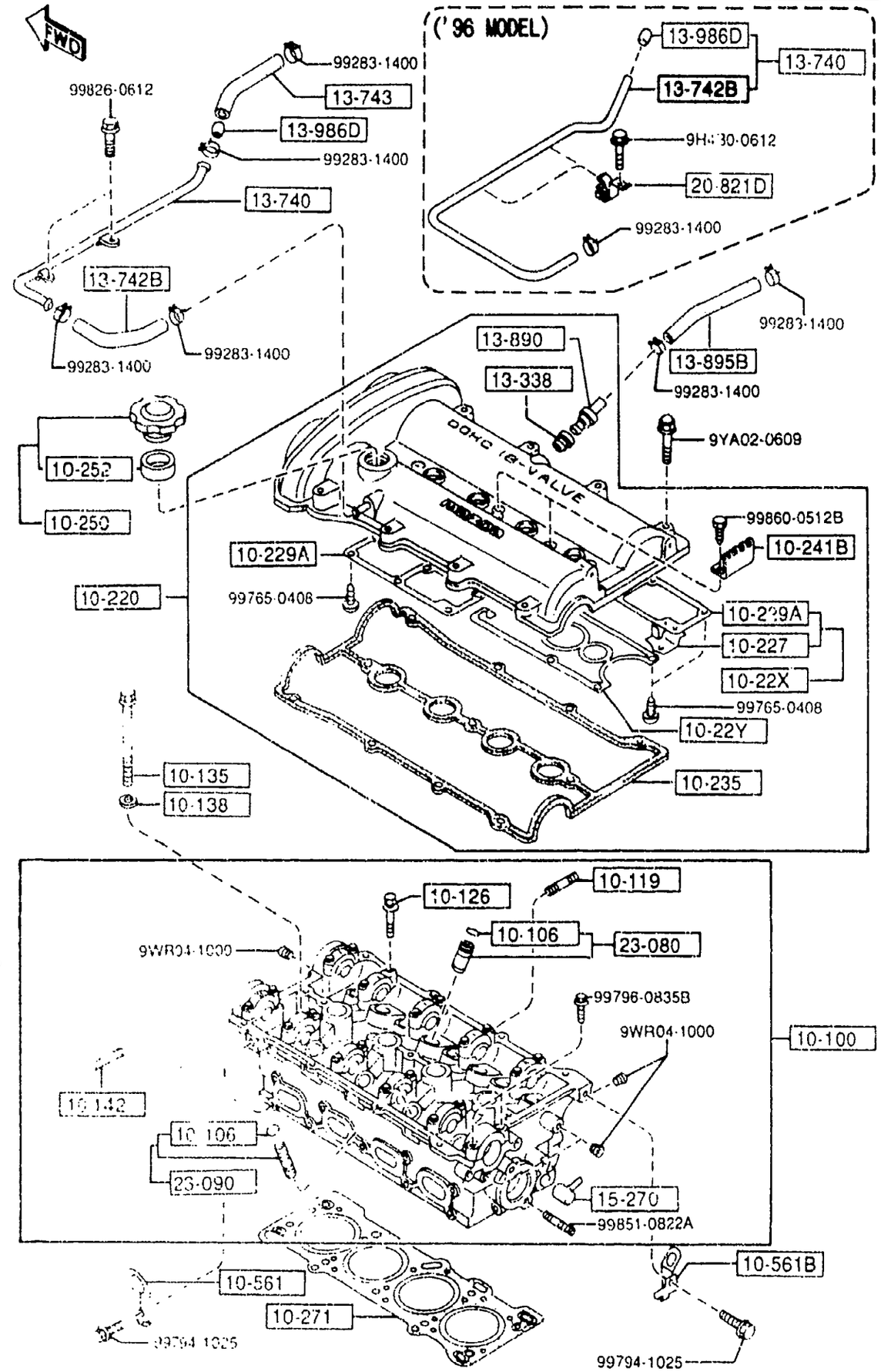


AUNA05

## 1010 -3 * CYLINDER HEAD & COVER

| PART NO. | QTY | MODEL/RESTRICTION | MODEL/RESTRICTION | MODEL/RESTRICTION | FROM-TO |
|---|---|---|---|---|---|
| 13-895B<br>BPE8-13-895 | 1 | HOSE,P.C.V. | | | |
| 13-986D<br>B61P-13-986 | 1 | ORIFICE | | | -5A02 |
| 15-270<br>BPE8-15-270 | 1 | PIPE,WATER BY PASS | | | |
| 20-821D<br>BPE8-20-820 | 2 | CLIP,HOSE<br>('96 MODEL) | | | |
| 23-080<br>B6Z1-10-280 | 8 | GUIDE,VALVE | | | |
| 23-090<br>BPY0-10-290 | 8 | GUIDE,VALVE | | | |

5A02 NA3** -703043

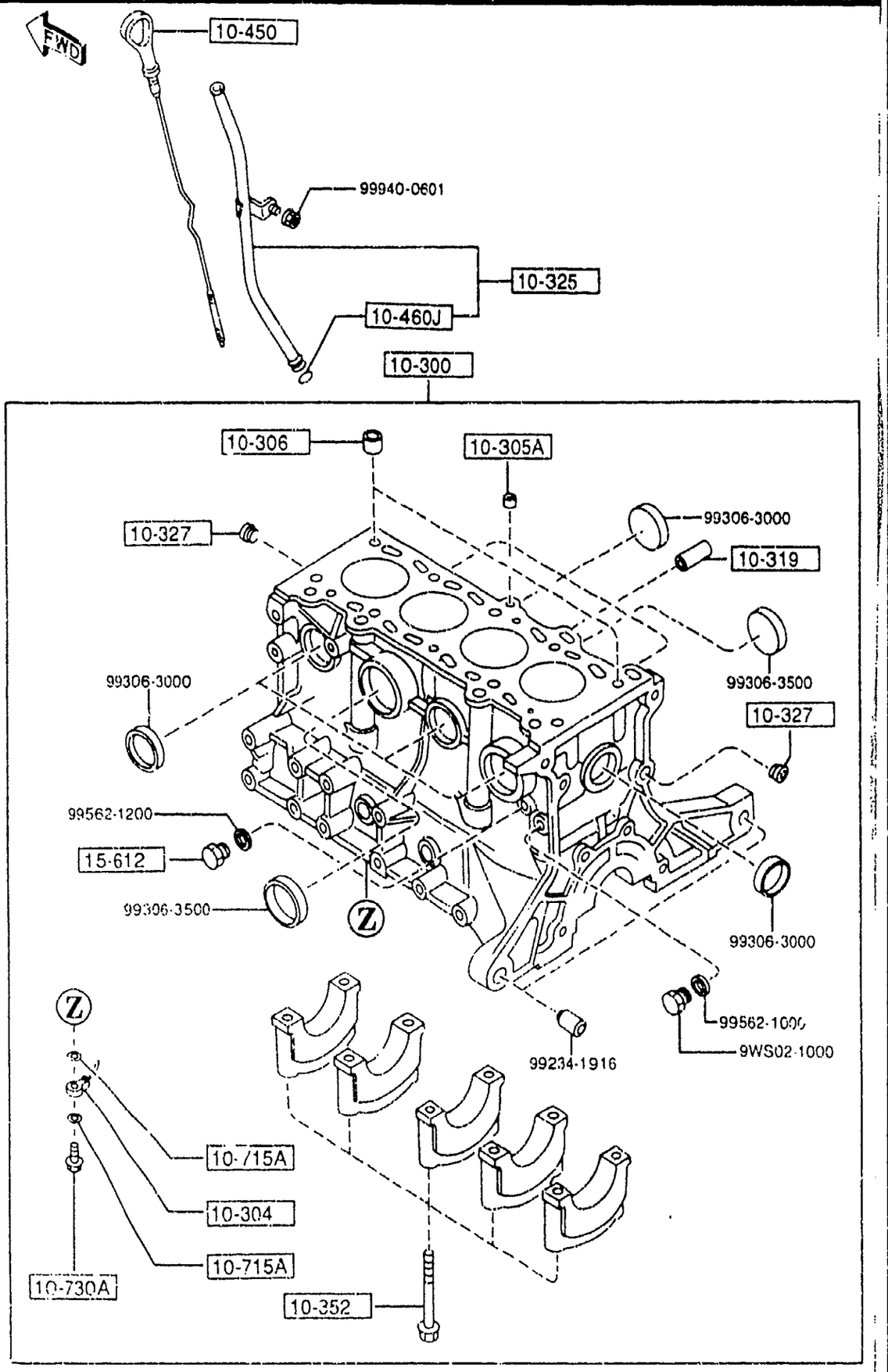




| PART NO. | QTY | MODEL/RESTRICTION | MODEL/RESTRICTION | MODEL/RESTRICTION | FROM-TO |
|---|---|---|---|---|---|
| 10-300 | | BLOCK,CYLINDER | | | |
| BP05-10-300M AN(BP05-10-300N) | 1 | | | | -5712 |
| BP05-10-300N | 1 | | | | 5712- |
| 10-304 | | JET,OIL | | | |
| BP01-10-580 A (BP01-10-580A) | 4 | | | | -5501 |
| BP01-10-580A | 4 | | | | 5501- |
| 10-305A | | PLUG | | | |
| B366-10-305 | 1 | | | | |
| 10-306 | | PIN,TUBULAR | | | |
| B630-10-306 | 2 | | | | |
| 10-319 | | JOINT | | | |
| E5B6-10-319C | 1 | | | | |
| 10-325 | | PIPE,OIL LEVEL GAUGE | | | |
| BPE8-10-440 | 1 | | | | |
| 10-327 | | PLUG,BLIND | | | |
| 0221-10-327 | 2 | | | | |
| 10-352 | | BOLT,BEARING CAP | | | |
| B630-10-352 | 10 | | | | |
| 10-450 | | GAUGE,OIL LEVEL | | | |
| BPE8-10-450 | 1 | | | | |
| 10-460J | | RING,'O' | | | |
| 99541-00907 | 1 | | | | |
| 10-715A | | GASKET,OIL JET | | | |
| SE01-10-715 | 8 | | | | -5501 |
| 10-730A | | VALVE,OIL JET | | | |
| SE01-10-730 | 4 | | | | |
| 15-612 | | PLUG | | | |

5501 NA35* -620210
5712 NA3** -700295

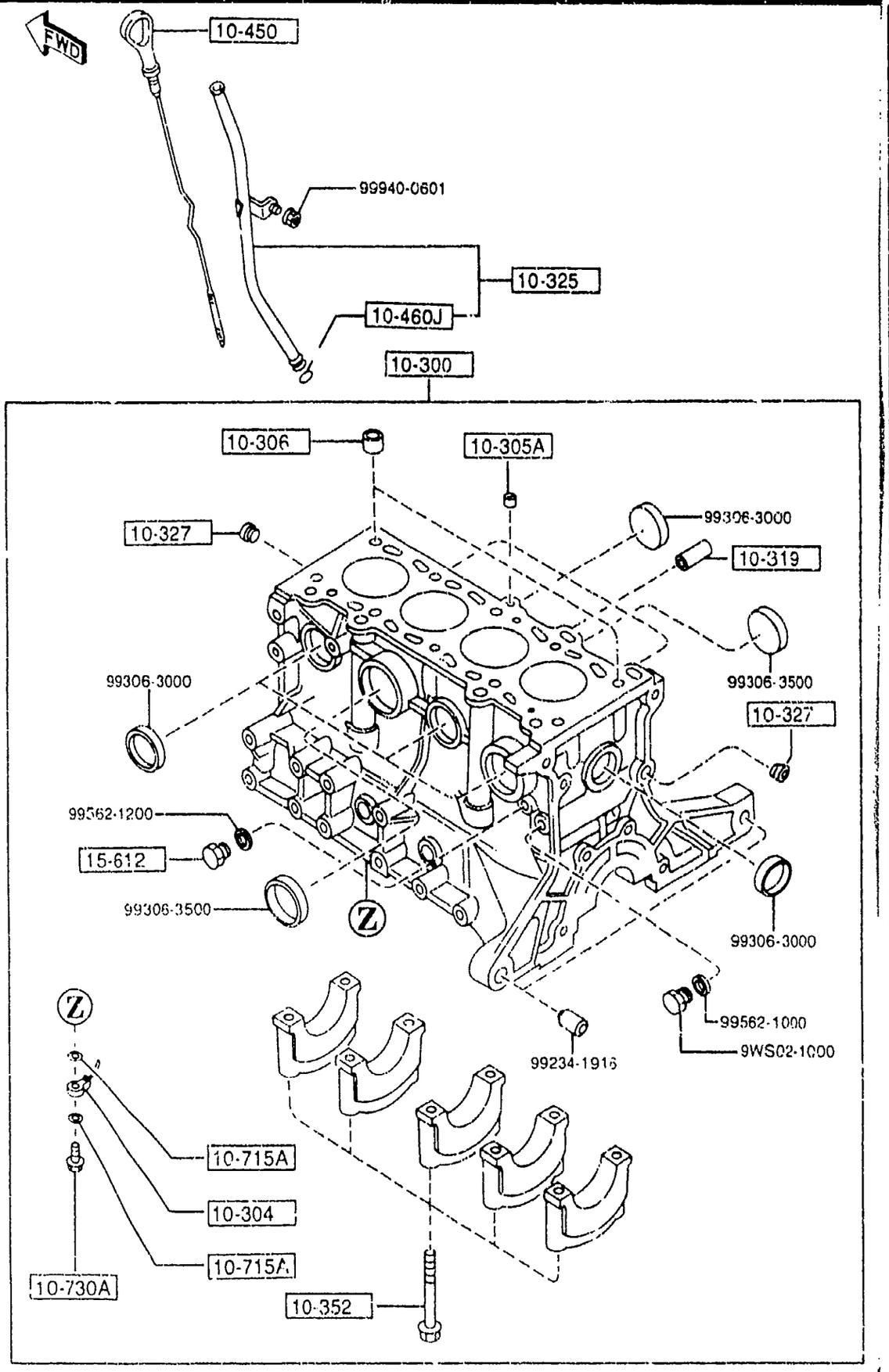


## 1030 -2 * CYLINDER BLOCK

| PART NO. | QTY | MODEL/RESTRICTION | MODEL/RESTRICTION | MODEL/RESTRICTION | FROM-TO |
|---|---|---|---|---|---|
| CONT'D | | | | | |
| SE01-15-612 | 1 | | | | -5712 |

5712 NA3** -700295

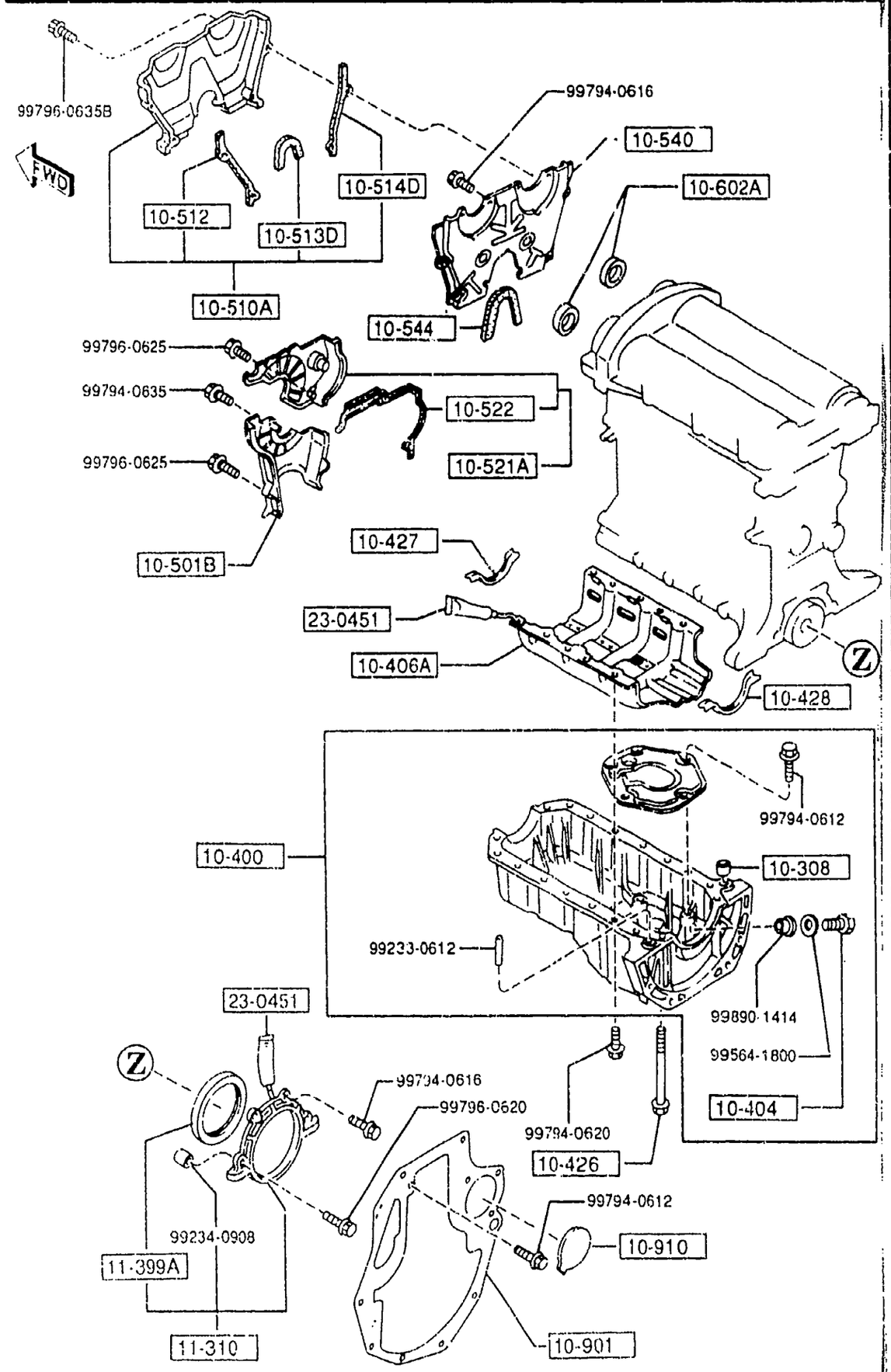






| PART NO. | QTY | MODEL/RESTRICTION | MODEL/RESTRICTION | MODEL/RESTRICTION | FROM-TO |
|---|---|---|---|---|---|
| 10-308 | | PIN,TUBULAR | | | |
| B6F4-10 308 | 1 | | | | |
| 10-400 | | PAN,OIL | | | |
| BPE8-10-400A | 1 | | | | |
| 10-404 | | PLUG,DRAIN | | | |
| B6S7-10-404A | 1 | | | | |
| 10-406A | | PLATE,OIL BAFFLE-CYL . BLK | | | |
| BPE8-10-40Y | 1 | | | | |
| 10-426 | | BOLT | | | |
| B6S7-10-465 | 2 | | | | |
| 10-427 | | GASKET,OIL PAN | | | |
| B6F4-10-427 | 1 | | | | |
| 10-428 | | GASKET,OIL PAN | | | |
| B6F4-10-428 | 1 | | | | |
| 10-501B | | COVER,TIMING BELT-LW R | | | |
| B660-10-501E | 1 | | | | |
| 10-510A | | COVER(UP.),TIMING CH AIN | | | |
| B61P-10-510 | 1 | | | | |
| 10-512 | | GASKET(L) | | | |
| B61P-10-512 | 1 | NON ASBESTOS | | | |
| 10-513D | | GASKET(INN),TIMING B ELT(L) | | | |
| B61P-10-513 | 1 | NON ASBESTOS | | | |
| 10-514D | | GASKET(C),TIMING BEL T(L) | | | |
| B61P-10-514 | 1 | NON ASBESTOS | | | |
| 10-521A | | COVER,TIMING BELT-C. | | | |
| B660-10-520B A (B660-10-521B) | 1 | | | | -4901 |

4901 NA35* -602618

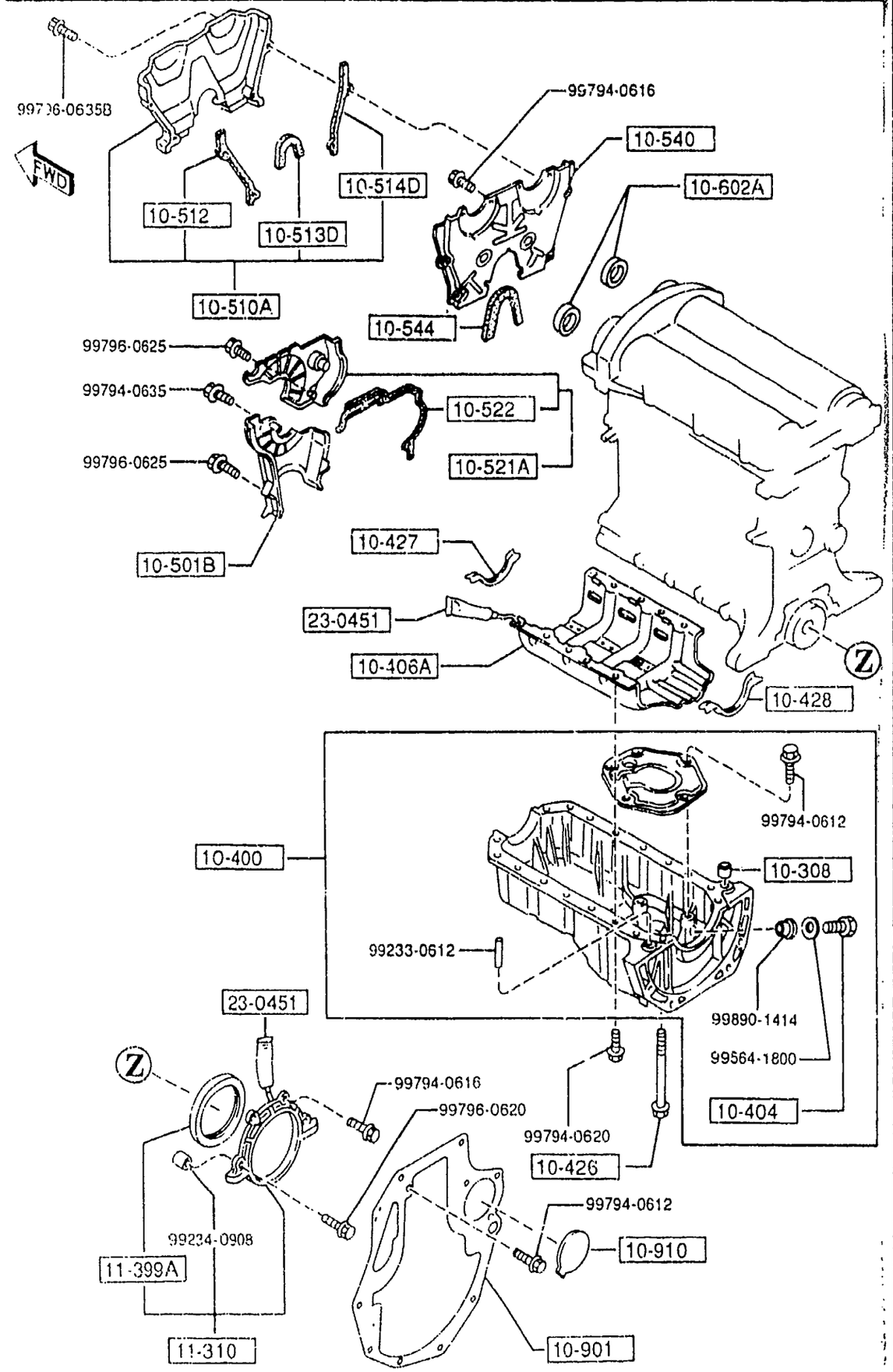




| PART NO. | QTY | MODEL/RESTRICTION | MODEL/RESTRICTION | MODEL/RESTRICTION | FROM-TO |
|---|---|---|---|---|---|
| CONT'D | | | | | |
| B660-10-521B | 1 | | | | 4901- |
| 10-522 | | GASKET,T.BELT COVER-C. | | | |
| B660-10-522 | 1 | NON ASBESTOS | | | -4901 |
| 10-540 | | PLATE,SEAL-T.BELT COVER U | | | |
| B61P-10-540C | 1 | | | | |
| 10-544 | | RUBBER,SEAL-SEAL PLATE | | | |
| B61P-10-544 | 1 | | | | |
| 10-602A | | SEAL,OIL | | | |
| FS05-10-602A | 2 | | | | |
| 10-901 | | PLATE,END | | | |
| B61P-10-901A | 1 | (MT) | | | |
| B64J-10-901 | 1 | (AT) | | | |
| 10-910 | | COVER,END PLATE | | | |
| B64J-10-903 | 1 | (AT) | | | |
| 11-310 | | COVER,REAR | | | |
| B366-11-310C | 1 | | | | |
| 11-399A | | SEAL,OIL-CRANKSHAFT | | | |
| BP05-11-312 | 1 | | | | |
| 23-0451 | | TUBE,SILICON | | | |
| 8527-77-739 | 1 | | | | |

4901 NA35* -602618

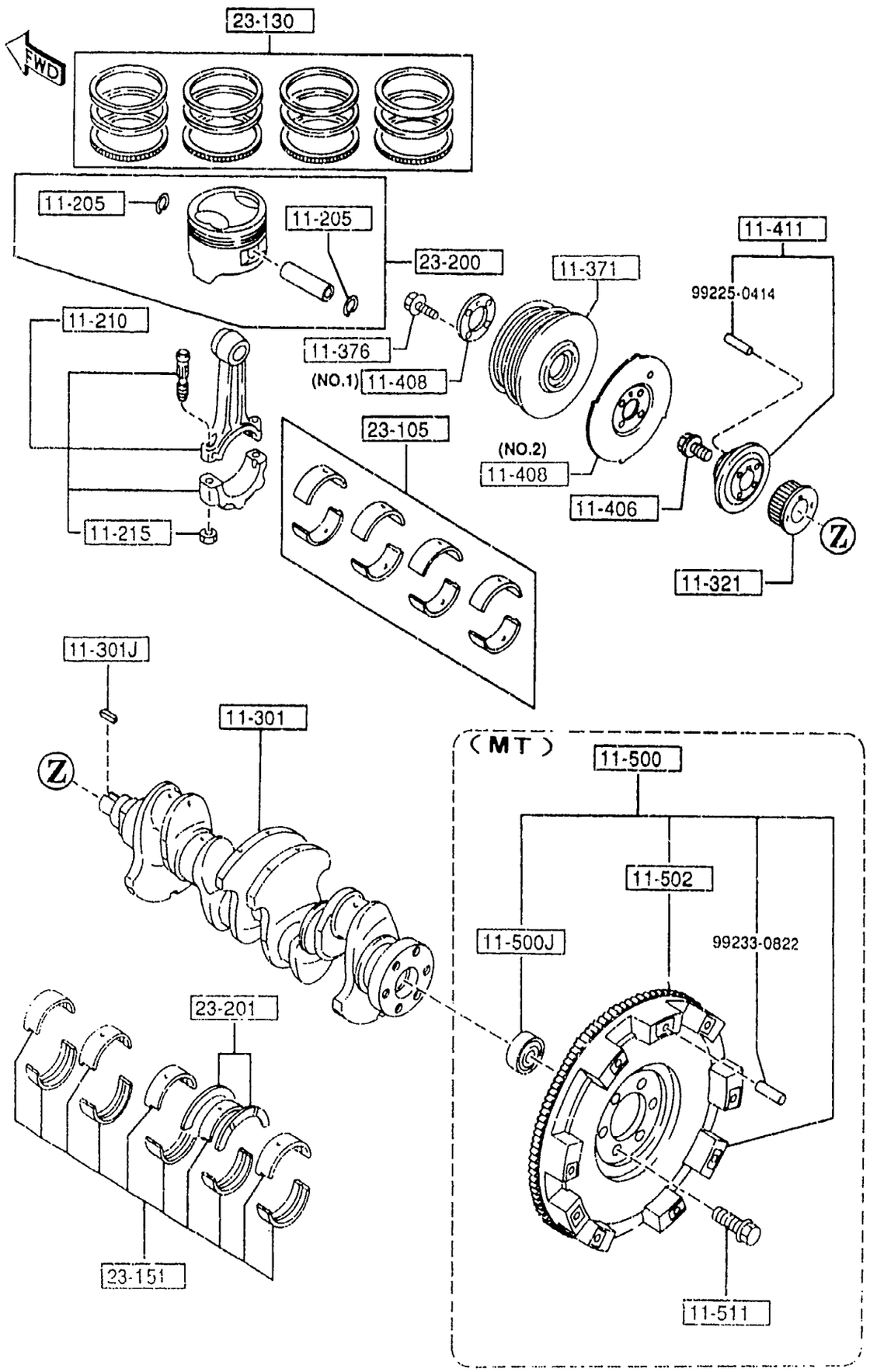




| PART NO. | QTY | MODEL/RESTRICTION | MODEL/RESTRICTION | MODEL/RESTRICTION | FROM-TO |
|---|---|---|---|---|---|
| 11-205 | | CLIP | | | |
| U221-11-205 | 8 | | | | |
| 11-210 | | ROD,CONNECTING | | | |
| B6S7-11-210E | 4 | | | | |
| 11-215 | | NUT,CONNECTING ROD | | | |
| B6S7-11-215A | 8 | | | | |
| 11-301 | | CRANKSHAFT | | | |
| BP06-11-300C | 1 | | | | |
| 11-301J | | KEY,WOODRUFF-PULLEY | | | |
| B3C7-11-317 | 1 | | | | |
| 11-321 | | PULLEY,TIMING BELT | | | |
| B3C7-11-321 | 1 | | | | |
| 11-371 | | PULLEY,CRANKSHAFT | | | |
| BPD3-11-401A | 1 | | | | |
| 11-376 | | BOLT,PULLEY | | | |
| JF01-11-405 | 4 | | | | |
| 11-406 | | BOLT,LOCK-C.SHAFT PULLEY | | | |
| B3C7-11-406 | 1 | | | | |
| 11-408 | | PLATE,CRANKSHAFT PULLEY | | | |
| B3C7-11-408 | 1 | (ILLUST. NO.1) | | | |
| B6BF-11-408B | 1 | (ILLUST. NO.2) ('96 MODEL) | | | |
| 11-411 | | BOSS,PULLEY | | | |
| B3C7-11-400 | 1 | ('95 MODEL) | | | |
| B6BF-11-400A | 1 | ('96 MODEL) | | | |
| 11-500 | | WHEEL,FLY | | | |
| BPR7-11-500 | 1 | (MT) | | | |
| 11-500J | | BEARING,BALL-FLY WHEEL | | | |
| F801-11-303 | 1 | (MT) | | | |

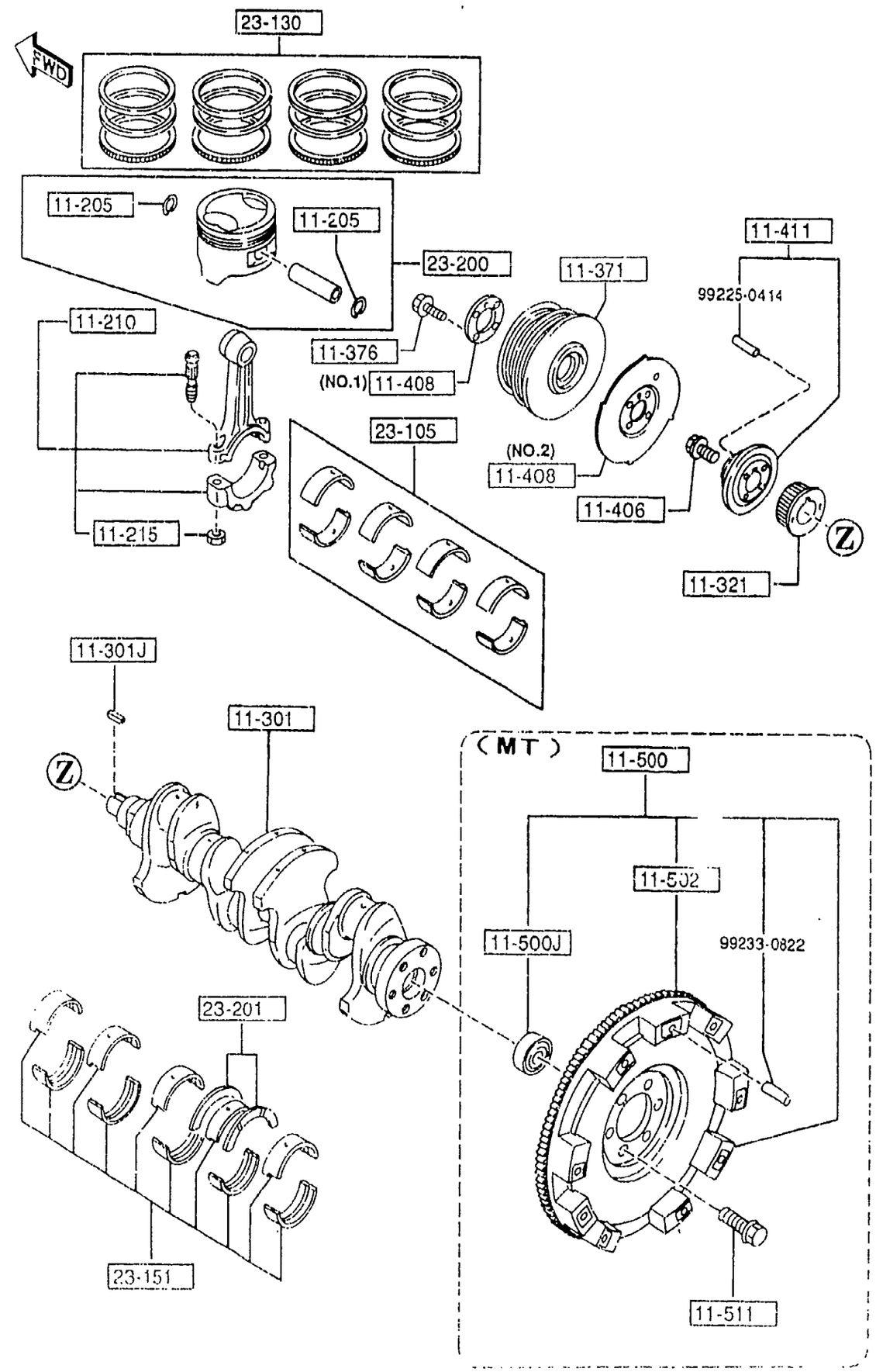




| PART NO. | QTY | MODEL/RESTRICTION | MODEL/RESTRICTION | MODEL/RESTRICTION | FROM-TO |
|---|---|---|---|---|---|
| +---------+ \| 11-502 \| +---------+ | | GEAR,RING-FLY WHEEL | | | |
| B367-11-502 | 1 | YOSHIWA (MT) | | | |
| 0110-11-502 | 1 | KANDA (MT) | | | 4C01- |
| +---------+ \| 11-511 \| +---------+ | | BOLT,LOCK-FLYWHEEL | | | |
| F201-11-511A | 6 | (MT) | | | |
| +---------+ \| 23-105 \| +---------+ | | METAL SET,CONN.ROD | | | |
| B6Y2-11-SE0 | | STD | | | |
| A (B6Y2-11-SE0A) | 1 | | | | -5601 |
| B6Y2-11-SFX | | O.S. 0.50 | | | |
| A (B6Y2-11-SFXA) | 1 | | | | -5601 |
| B6Y2-11-SFY | | O.S. 0.75 | | | |
| A (B6Y2-11-SFYA) | 1 | | | | -5601 |
| B6Y2-11-SF0 | | O.S. 0.25 | | | |
| A (B6Y2-11-SF0A) | 1 | | | | -5601 |
| B6Y2-11-SE0A | 1 | STD. | | | 5601- |
| B6Y2-11-SFXA | 1 | O.S. 0.50 | | | 5601- |
| B6Y2-11-SFYA | 1 | O.S. 0.75 | | | 5601- |
| B6Y2-11-SF0A | 1 | O.S. 0.25 | | | 5601- |
| +---------+ \| 23-130 \| +---------+ | | RING SET,PISTON | | | |
| BPY1-11-SC0 | 1 | STD. | | | |
| BPY1-11-SDX | 1 | O.S. 0.50 | | | |
| BPY1-11-SD0 | 1 | O.S. 0.25 | | | |
| +---------+ \| 23-151 \| +---------+ | | METAL SET,MAIN BRG. | | | |
| B6Y2-11-SG0 | 1 | STD. | | | |
| B6Y1-11-SHX | 1 | O.S. 0.50 | | | |
| B6Y1-11-SHY | 1 | O.S. 0.75 | | | |
| B6Y1-11-SH0 | 1 | O.S. 0.25 | | | |

4C01 NA35* -609691
5601 NA3** -700001

1100 -3 * PISTON, CRANKSHAFT & FLYWHEEL

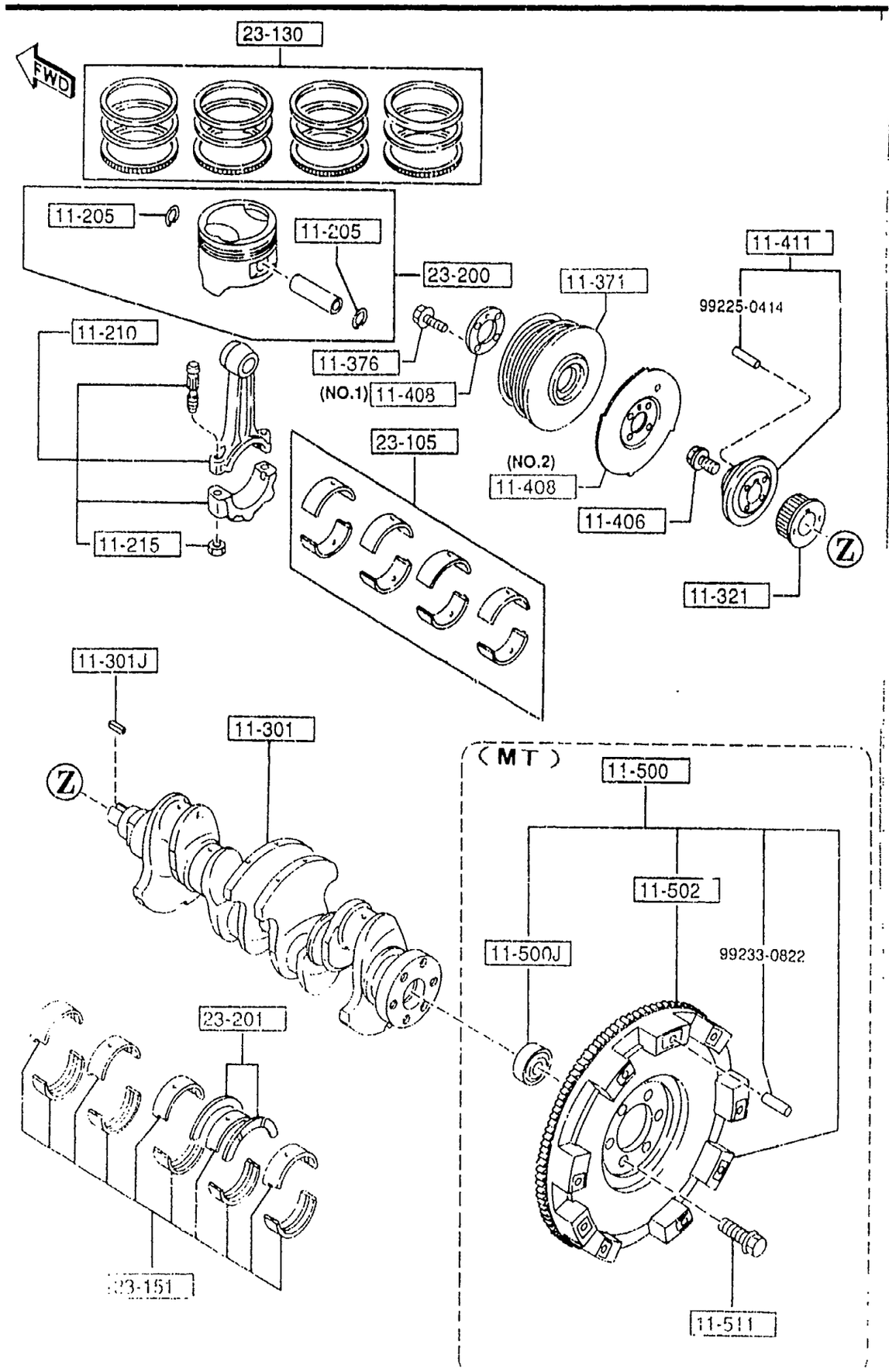


| PART NO. | QTY | MODEL/RESTRICTION | MODEL/RESTRICTION | MODEL/RESTRICTION | FROM-TO |
|---|---|---|---|---|---|
| +---------+ | | | | | |
| \| 23-200 \| | | PISTON SET | | | |
| +---------+ | | | | | |
| BPY1-11-SA0A | 4 | STD. | | | |
| BPY1-11-SBXA | 4 | O.S. 0.50 | | | |
| BPY1-11-SB0A | 4 | O.S. 0.25 | | | |
| +---------+ | | | | | |
| \| 23-201 \| | | METAL SET,THRUST | | | |
| +---------+ | | | | | |
| B6Y1-11-SJ0 | 1 | STD. | | | |
| B6Y1-11-SKX | 1 | O.S. 0.50 | | | |
| B6Y1-11-SKY | 1 | O.S. 0.75 | | | |
| B6Y1-11-SK0 | 1 | O.S. 0.25 | | | |

## 1200 VALVE SYSTEM

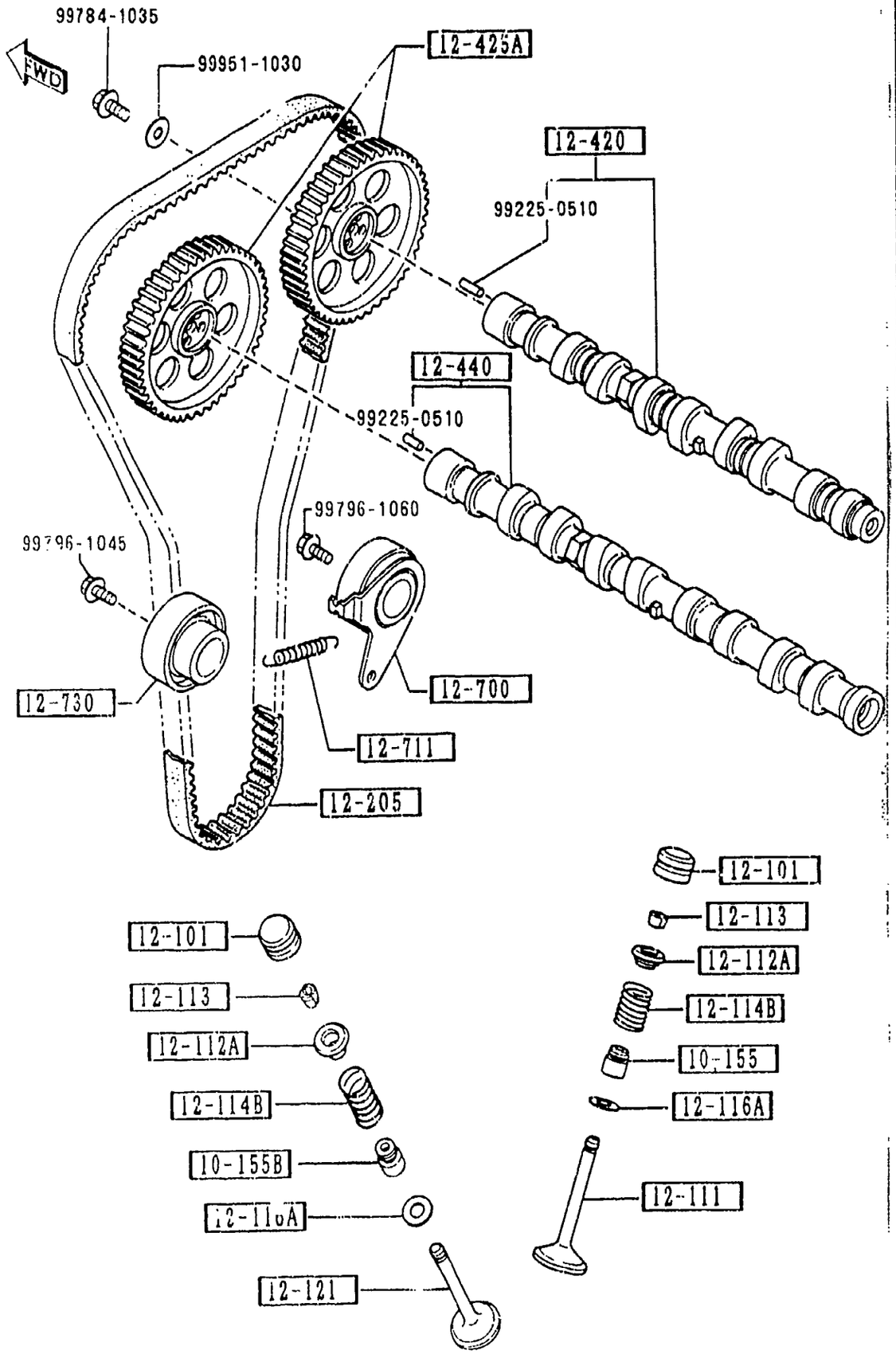


| PART NO. | QTY | MODEL/RESTRICTION | MODEL/RESTRICTION | MODEL/RESTRICTION | FROM-TO |
|---|---|---|---|---|---|
| 10-155 | | SEAL,VALVE | | | |
| KL01-10-155 | 8 | NOK | | | |
| 10-155B | | SEAL,VALVE | | | |
| KL02-10-155 | 8 | NOK | | | |
| 12-101 | | ADJUSTER,HYDRAULIC L ASH | | | |
| KL01-12-101B | 16 | NITTAN VALVE | | | |
| 12-111 | | VALVE,INLET | | | |
| BP05-12-111 | 8 | NITTAN VALVE | | | -5901 |
| BP06-12-111 A (BP05-12-111 ) | 8 | FUJI VALVE | | | -5A01 |
| BP1B-12-111 | 8 | NITTAN VALVE | | | 5901- |
| BP06-12-111A | 8 | FUJI VALVE | | | 5A01- |
| 12-112A | | SEAT,VALVE SPG-UP. | | | |
| BP05-12-113 | 16 | | | | -5606 |
| B6BF-12-113 | 16 | | | | 5606- |
| 12-113 | | COTTER,VALVE-IN. | | | |
| FE3N-12-114 | 32 | | | | -5606 |
| FS01-12-114 | 32 | | | | 5606- |
| 12-114B | | SPRING,VALVE | | | |
| BP05-12-125 | 16 | | | | |
| 12-116A | | SEAT,VALVE SPG.-LWR | | | |
| B660-12-123A | 16 | | | | |
| 12-121 | | VALVE,EXHAUST | | | |
| BP05-12-121A | 8 | | | | |
| 12-205 | | BELT,TIMING | | | |
| B6S7-12-205C AN(B6S7-12-205D) | 1 | UNITTA | | | -5C01 |
| B6S7-12-205D | | UNITTA | | | |

5606 NA3** -700001
5901 NA3** -702989
5A01 NA3** -703035
5C01 NA3** -706448

## 1200 VALVE SYSTEM

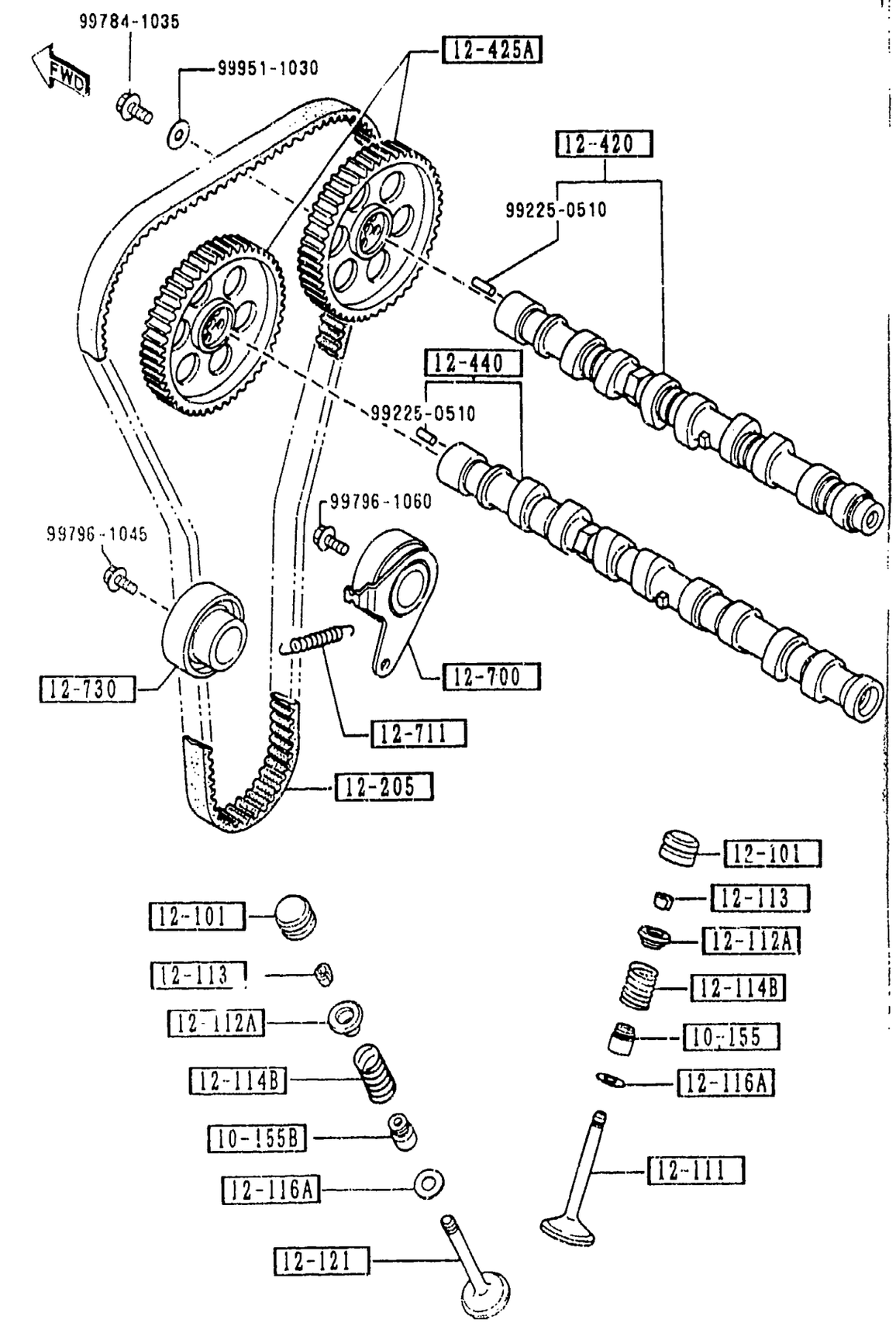


| PART NO. | QTY | MODEL/RESTRICTION | MODEL/RESTRICTION | MODEL/RESTRICTION | FROM-TO |
|---|---|---|---|---|---|
| CONT'D | 1 | | | | 5C01- |
| 12-420 | | CAMSHAFT | | | |
| BP05-12-420E | 1 | | | | |
| 12-425A | | PULLEY,CAMSHAFT | | | |
| B6S7-12-425A | 2 | | | | |
| 12-440 | | CAMSHAFT,EXHAUST | | | |
| BP06-12-440C | 1 | | | | |
| 12-700 | | TENSIONER,TIMING BEL T | | | |
| B660-12-700E | 1 | | | | |
| 12-711 | | SPRING,TENSIONER | | | |
| B660-12-711C | 1 | | | | |
| 12-730 | | IDLER,TIMING BELT | | | |
| B660-12-730C | 1 | | | | |

5C01 NA3** -706448

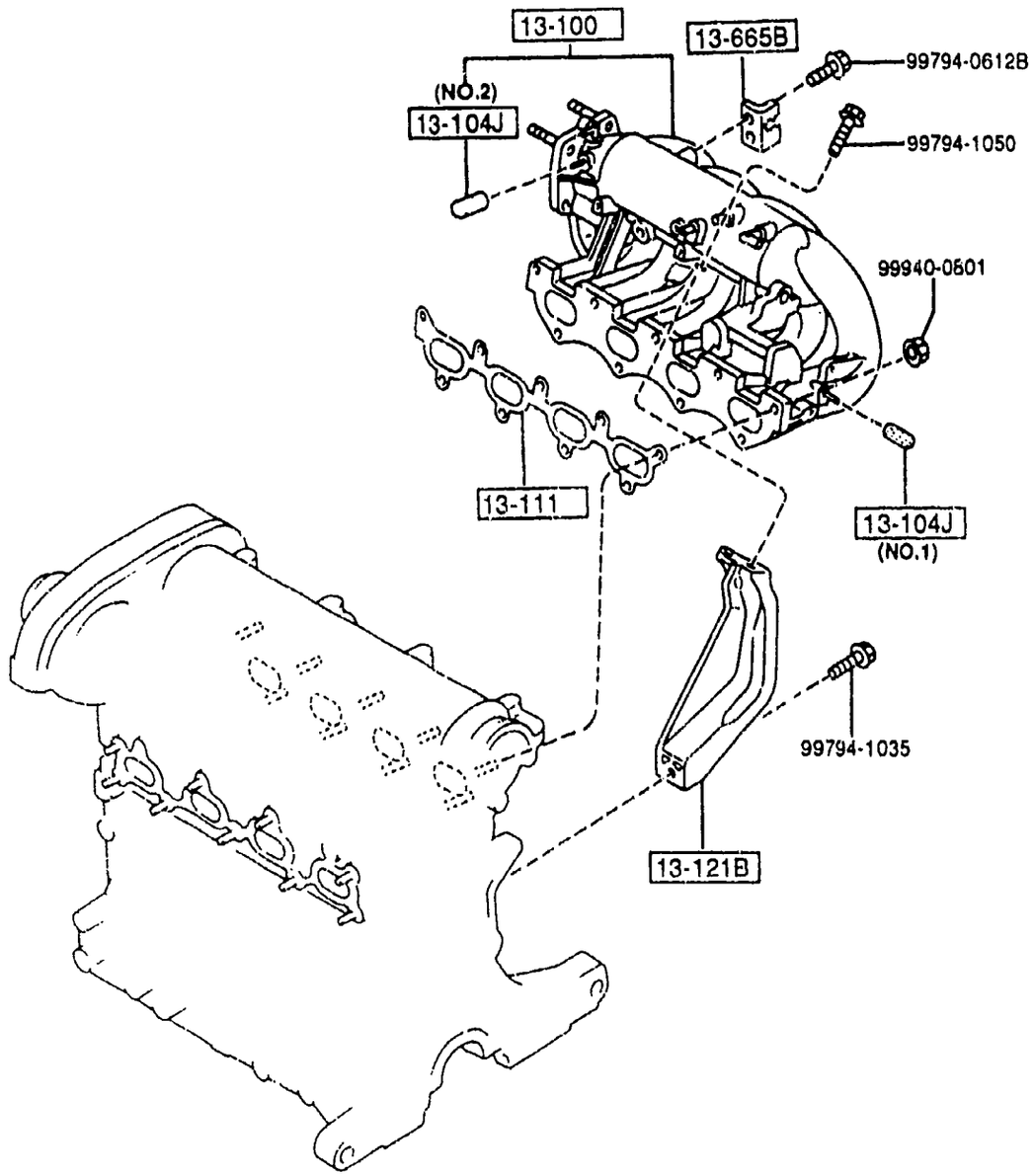


## 1300 -1 * INLET MANIFOLD

| PART NO. | QTY | MODEL/RESTRICTION | MODEL/RESTRICTION | MODEL/RESTRICTION | FROM-TO |
|---|---|---|---|---|---|
| 13-100 | | MANIFOLD,INLET | | | |
| BPE8-13-100C | 1 | | | | -5201 |
| BPE8-13-100D | 1 | | | | 5201- |
| 13-104J | | CAP,BLIND | | | |
| F8L7-13-104 | 1 | (ILLUST. NO.1) (MT) | | | |
| 1010-13-104 | 1 | (ILLUST. NO.2) | | | |
| 13-111 | | GASKET,IN.MANIFOLD | | | |
| BP05-13-111 | 1 | NON ASBESTOS | | | |
| 13-121B | | STAY,MANIFOLD | | | |
| BPE8-13-121 | 1 | | | | |
| 13-665B | | BRACKET,ACCEL WIRE | | | |
| BPR5-13-665 | 1 | | | | |

5201 NA35* -614193

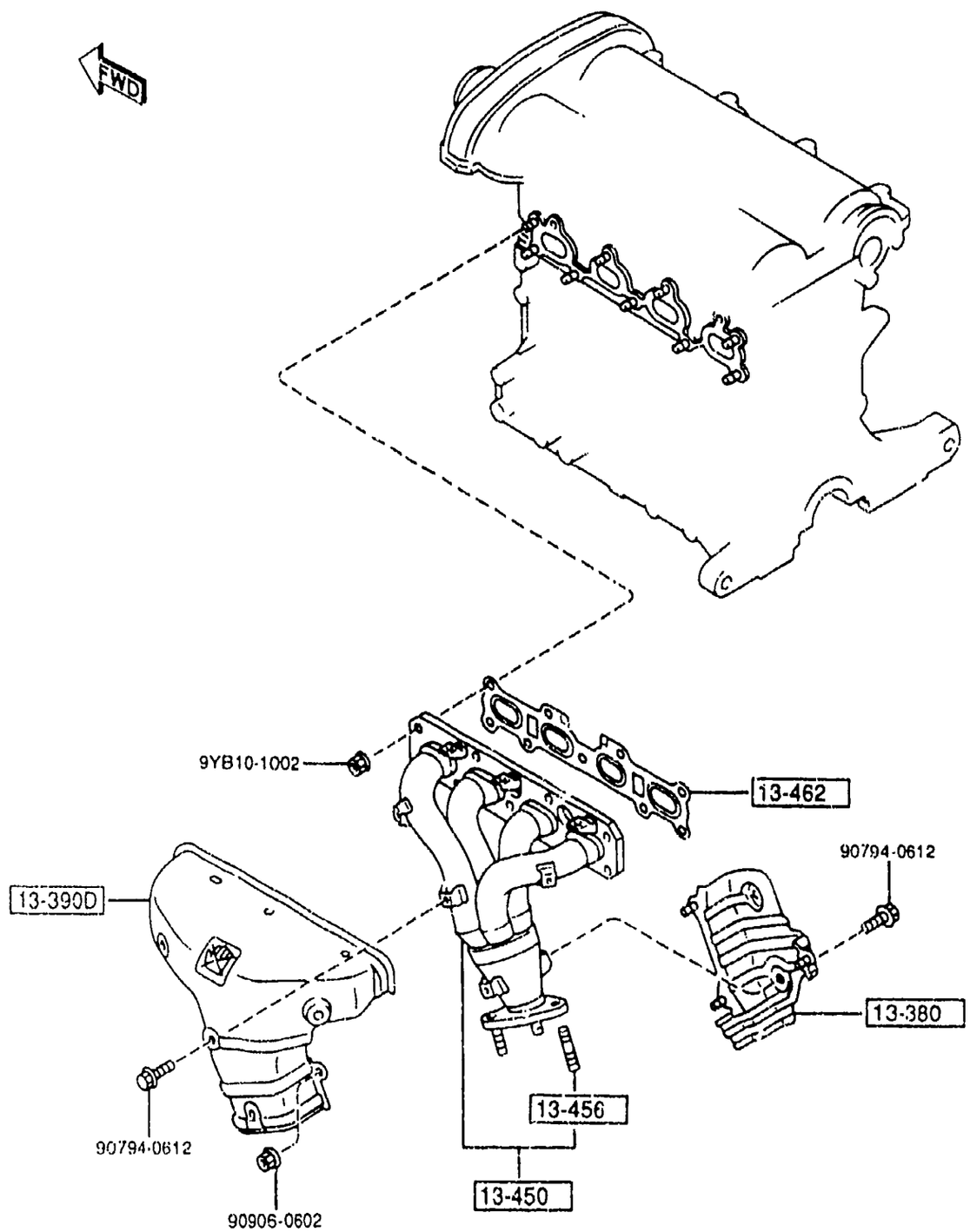


## 1310 -1 * EXHAUST MANIFOLD

| PART NO. | QTY | MODEL/RESTRICTION | MODEL/RESTRICTION | MODEL/RESTRICTION | FROM-TO |
|---|---|---|---|---|---|
| 13-380 | | INSULATOR,HEAT | | | |
| BPE8-13-380A | 1 | | | | |
| 13-390D | | INSULATOR,EX.MANIFOLD | | | |
| BPE8-13-390 | 1 | | | | |
| 13-450 | | MANIFOLD,EXHAUST | | | |
| BPE8-13-450 | 1 | | | | |
| 13-456 | | STUD | | | |
| 2306-13-456 | 3 | | | | |
| 13-462 | | GASKET,EX.MANIFOLD | | | |
| BP05-13-460 | 1 | NON ASBESTOS | | | |

## 1320 FUEL SYSTEM

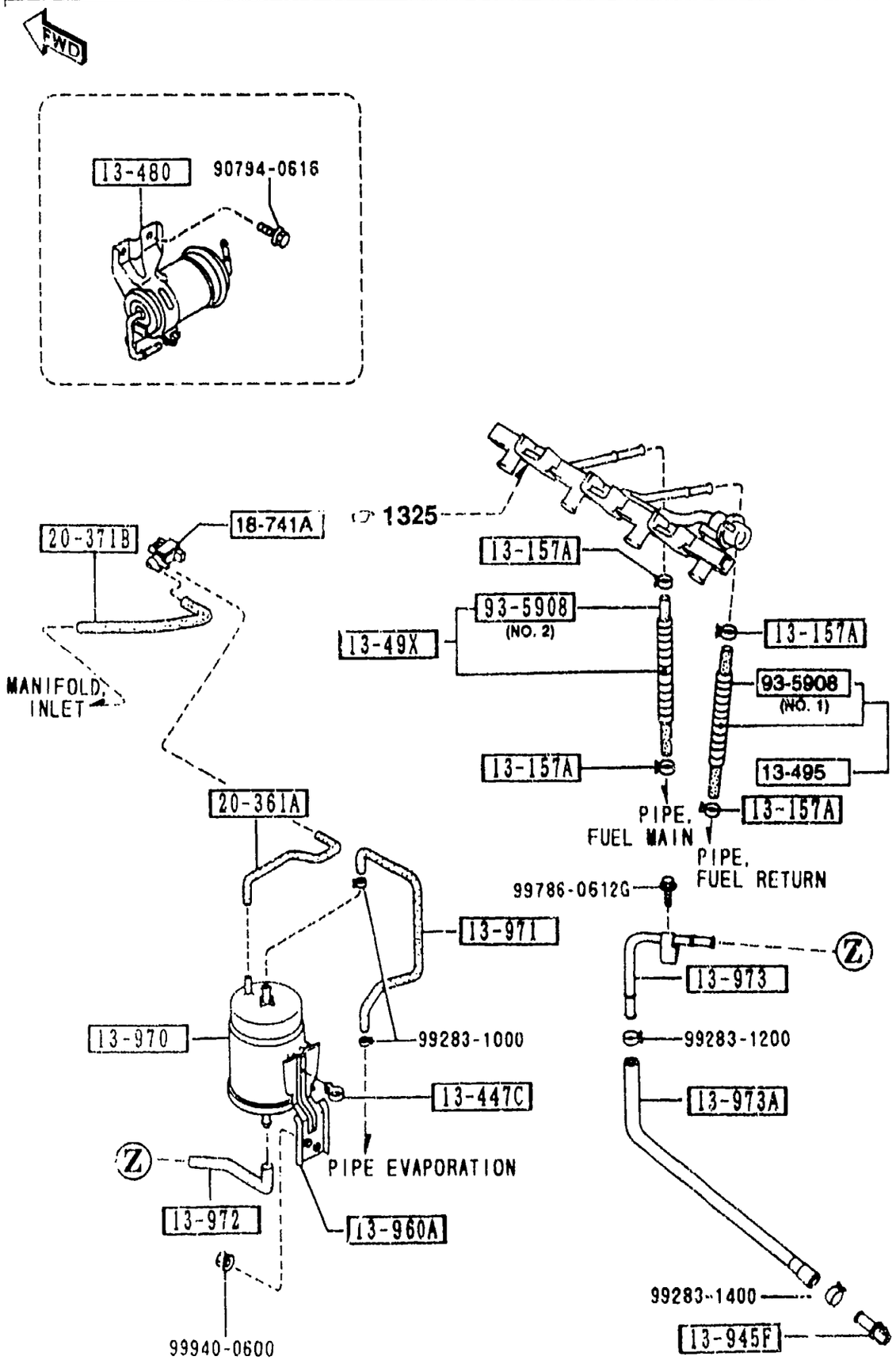


| PART NO. | QTY | MODEL/RESTRICTION | MODEL/RESTRICTION | MODEL/RESTRICTION | FROM-TO |
|---|---|---|---|---|---|
| 13-157A<br>8574-13-157 | 4 | CLIP | | | |
| 13-447C<br>B61P-13-447 | 1 | CLAMP,HOSE | | | |
| 13-480<br>B61P-20-490 | 1 | FILTER,FUEL | | | |
| 13-49X<br>BPE8-13-49X | 1 | HOSE,FUEL-EGI | | | |
| 13-495<br>BPE8-13-495 | 1 | HOSE,FUEL | | | |
| 13-945F<br>JE16-13-298 | 1 | CONNECTOR | | | |
| 13-960A<br>B61P-13-960 | 1 | BRACKET,CANISTER | | | |
| 13-970<br>JE16-13-970A | 1 | CANISTER | | | |
| 13-971<br>B6CA-13-971 | 1 | HOSE,VENTILATION | | | |
| 13-972<br>B6CA-13-972 | 1 | HOSE,EVAPORATION | | | |
| 13-973<br>B61P-13-97YA | 1 | HOSE,DRAIN | | | |
| 13-973A<br>B61P-13-973A | 1 | HOSE,EVAPORATION | | | |
| 18-741A<br>JE16-18-741 | 1 | VALVE,THREE WAY<br>NIHON OIL SEAL | | | |
| 20-361A | | TUBE,VACUUM | | | |



1-G 4

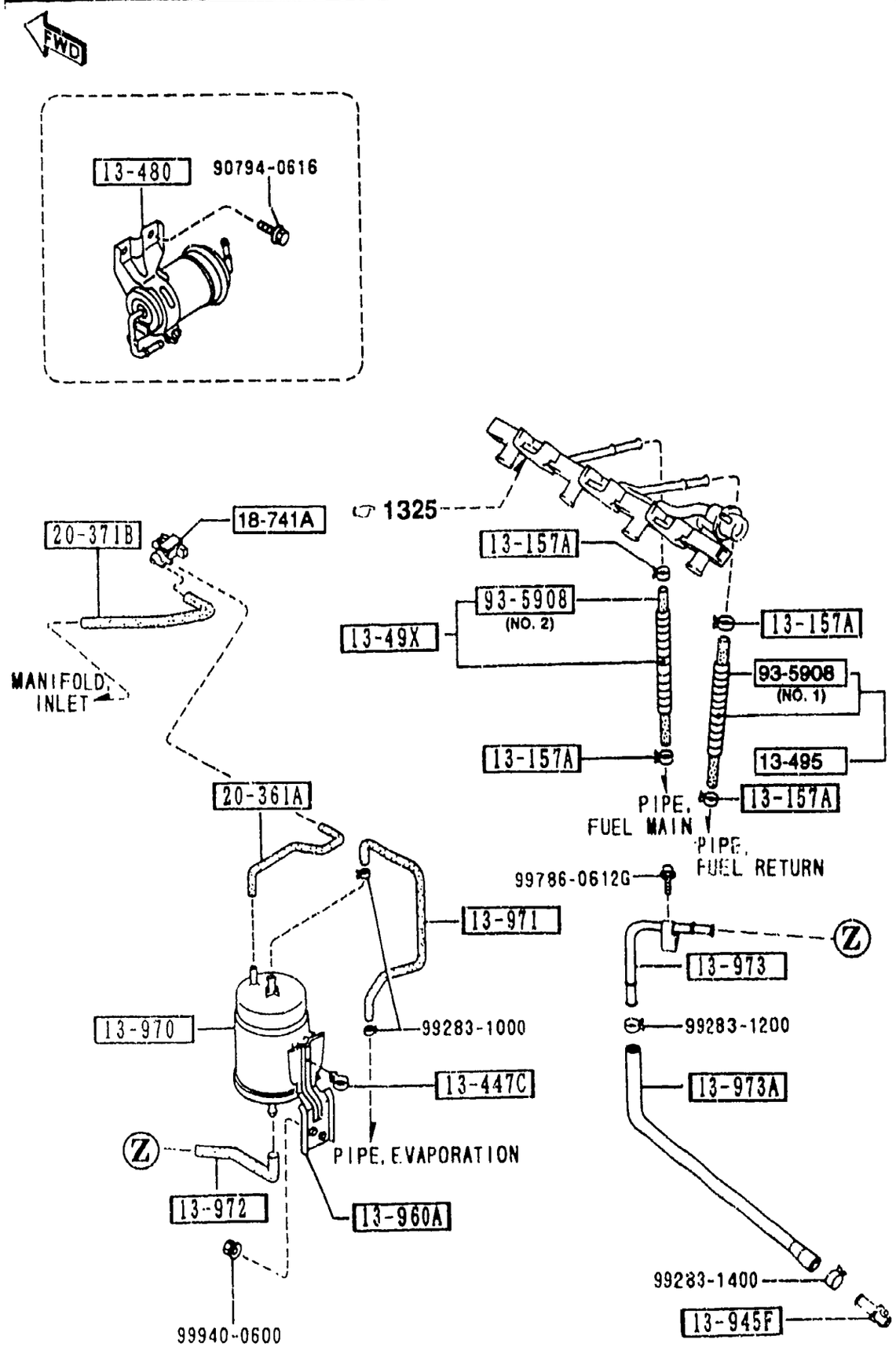




| PART NO. | QTY | MODEL/RESTRICTION | MODEL/RESTRICTION | MODEL/RESTRICTION | FROM-TO |
|---|---|---|---|---|---|
| CONT'D | | | | | |
| B61P-20-361 | 1 | | | | |
| +---------+ | | | | | |
| \| 20-371B \| | | TUBE,VACUUM | | | |
| +---------+ | | | | | |
| BPE8-20-371 | 1 | | | | |
| +---------+ | | | | | |
| \| 93-5908 \| | | HOSE | | | |
| +---------+ | | | | | |
| *99359-0830M | 1 | (ILLUST. NO.1) | | | |
| 99359-0834 | 1 | (ILLUST. NO.2) | | | |

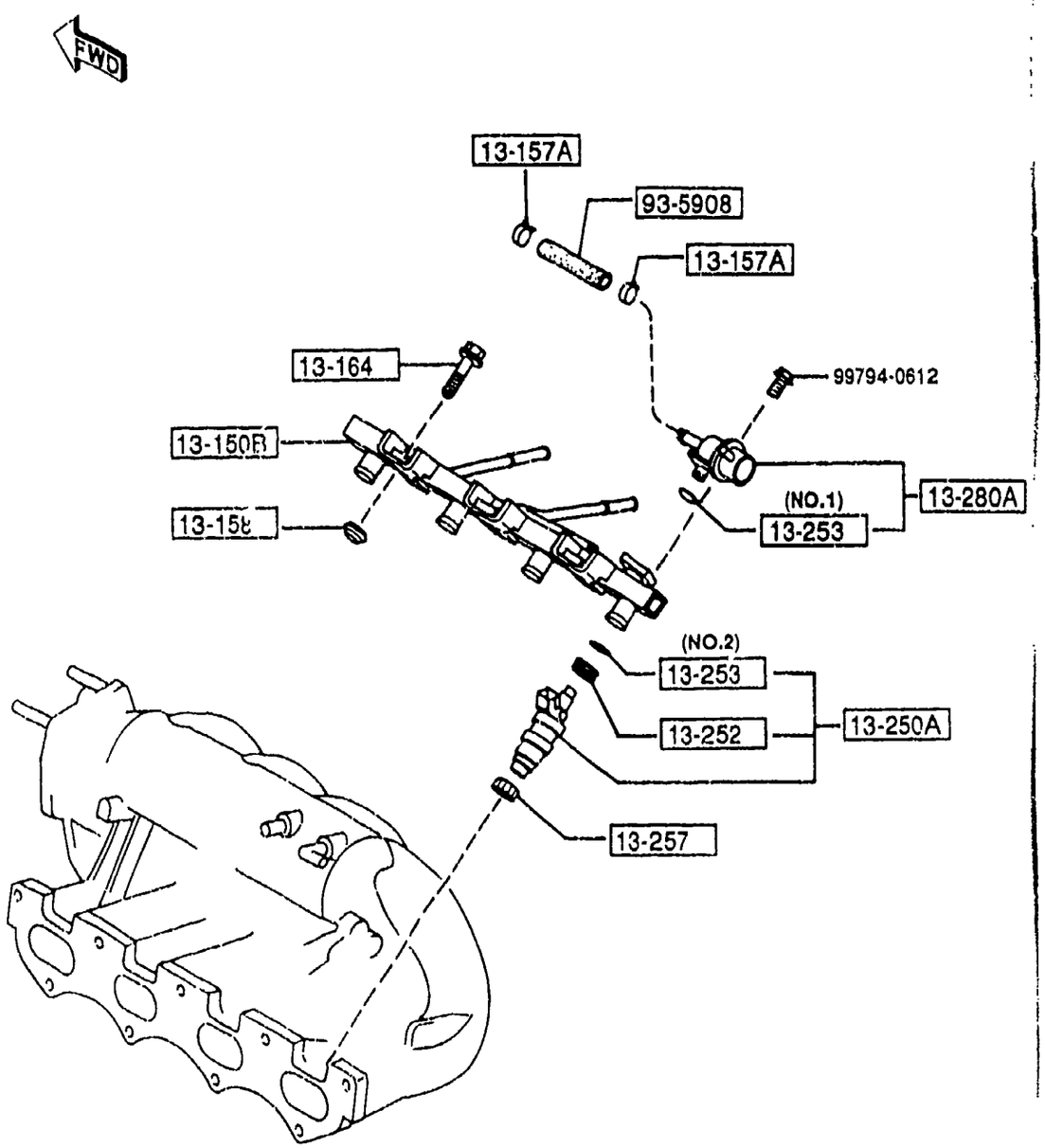


## 1325 -1 * FUEL DISTRIBUTOR

| PART NO. | QTY | MODEL/RESTRICTION | MODEL/RESTRICTION | MODEL/RESTRICTION | FROM-TO |
|---|---|---|---|---|---|
| 13-150B | | DISTRIBUTOR,FUEL | | | |
| BPE8-13-150 | 1 | | | | |
| 13-157A | | CLIP | | | |
| 8574-13-157 | 2 | | | | |
| 13-158 | | INSULATOR,FUEL DIST. | | | |
| B675-13-158 | 3 | | | | |
| 13-164 | | BOLT,FUEL DISTRIBUTOR | | | |
| F8B3-13-164 | 3 | | | | |
| 13-250A | | INJECTION,FUEL-M.P.ELECT. | | | |
| BP06-13-250 | 4 | | | | |
| 13-252 | | GROMMET | | | |
| 8574-13-252 | 4 | | | | |
| 13-253 | | RING,'O' | | | |
| G601-13-253 | 1 | (ILLUST. NO.1) | | | |
| 8574-13-253 | 4 | (ILLUST. NO.2) | | | |
| 13-257 | | INSULATOR,INJECTION | | | |
| JE06-13-257 | 4 | | | | |
| 13-280A | | PRESSURE RG.,FUEL | | | |
| KJ01-13-280 | 1 | | | | |
| 93-5908 | | HOSE | | | |
| 99359-0809 | 1 | | | | |

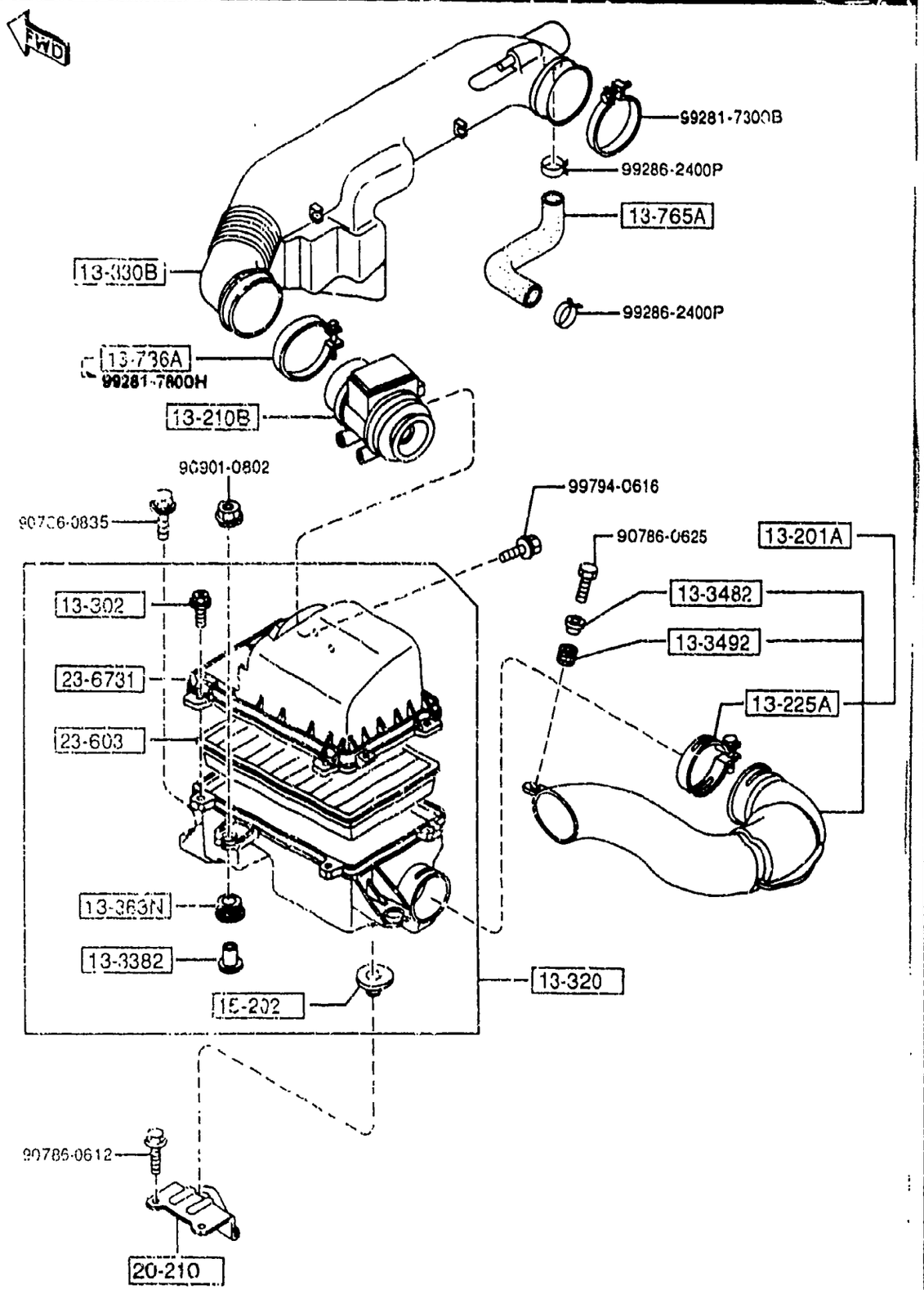




| PART NO. | QTY | MODEL/RESTRICTION | MODEL/RESTRICTION | MODEL/RESTRICTION | FROM-TO |
|---|---|---|---|---|---|
| 13-201A | | DUCT,FRESH AIR | | | |
| BPE8-13-200 | 1 | | | | |
| 13-210B | | SENSOR,AIR FLOW | | | |
| B6BF-13-215 | 1 | | | | |
| 13-225A | | CLAMP,HOSE | | | |
| B61P-13-735 | 1 | | | | |
| 13-302 | | BOLT,AIR CLEANER | | | |
| F201-13-302A | 4 | | | | |
| 13-320 | | CLEANER,AIR | | | |
| BPE8-13-320 | 1 | | | | |
| 13-330B | | PIPE,AIR INTAKE | | | |
| BPE8-13-331A | 1 | | | | -6118 |
| A (BPE8-13-331B) | | | | | |
| *BPE8-13-331B | 1 | | | | 6118- |
| 13-3382 | | SPACER | | | |
| FE51-13-329 | 3 | | | | |
| 13-3482 | | SPACER,AIR INT.PIPE | | | |
| SLA1-13-321 | 1 | | | | |
| 13-3492 | | INSULATOR | | | |
| S501-13-349 | 1 | | | | |
| 13-363N | | RUBBER,MOUNTING | | | |
| FE51-13-363 | 3 | | | | |
| 13-736A | | CLAMP,HOSE-A.I.P./A. CLNR | | | |
| KL01-13-735 | 1 | | | | -5201 |
| 13-765A | | HOSE,AIR | | | |
| BPE8-13-765A | 1 | | | | |
| 15-202 | | RUBBER,MOUNT | | | |
| B61P-13-Z66 | 1 | | | | |

5201 NA35* -614193
6118 NA3** -709942

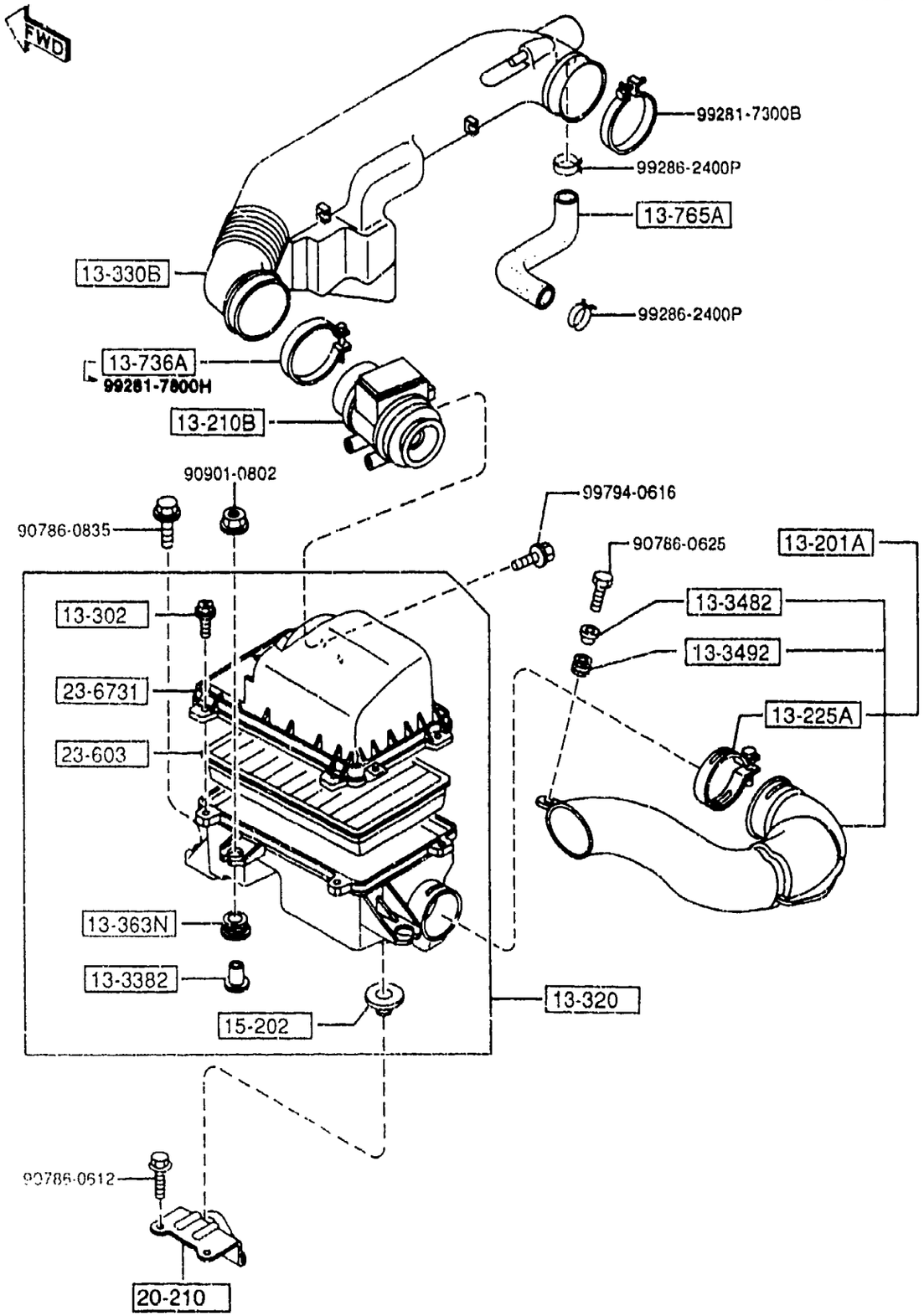


## 1330 -2 * AIR CLEANER

| PART NO. | QTY | MODEL/RESTRICTION | MODEL/RESTRICTION | MODEL/RESTRICTION | FROM-TO |
|---|---|---|---|---|---|
| 20-210 | | BRACKET,AIR CLEANER | | | |
| B61P-20-211 | 1 | | | | |
| 23-603 | | ELEMENT,AIR CLEANER | | | |
| B6S7-13-Z40 | 1 | | | | |
| 23-6731 | | COVER,AIR CLEANER | | | |
| BPE8-13-Z01 | 1 | | | | |

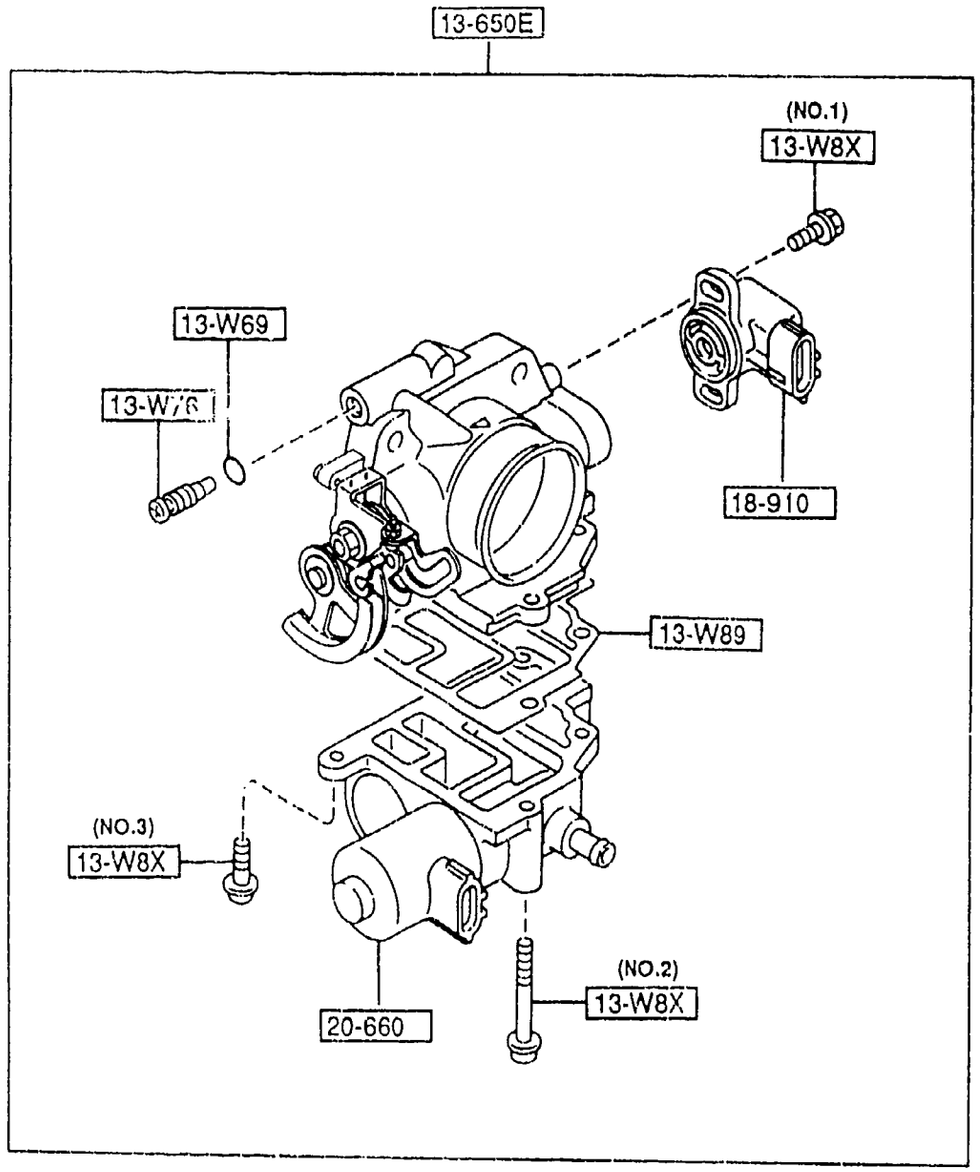

## 1364 -1 * THROTTLE BODY

| PART NO. | QTY | MODEL/RESTRICTION | MODEL/RESTRICTION | MODEL/RESTRICTION | FROM-TO |
|---|---|---|---|---|---|
| 13-W69 | | RING,'O' | | | |
| K801-13-W69 | 1 | | | | |
| 13-W76 | | SCREW,ID.ADJUST-TH. BODY | | | |
| K801-13-W76 | 1 | | | | |
| 13-W8X | | SCREW & WASHER SET | | | |
| B551-13-W8X | 2 | (ILLUST. NO.1) | | | |
| B6BF-13-W8X | 2 | (ILLUST. NO.2) | | | |
| K802-13-W8X | 2 | (ILLUST. NO.3) | | | |
| 13-W89 | | GASKET,THERMO | | | |
| B6BF-13-W89 | 1 | | | | |
| 13-650E | | BODY,THROTTLE | | | |
| BPR5-13-640 | 1 | | | | |
| 18-910 | | SENSOR,THROTTLE-CARB | | | |
| JE50-18-911 | 1 | | | | |
| 20-660 | | VALVE,IDLE AIR CONTROL | | | |
| B6BF-20-660 | 1 | | | | |

## 1370 EMISSION CONTROL SYSTEM (INLET SIDE)

('96 MODEL)

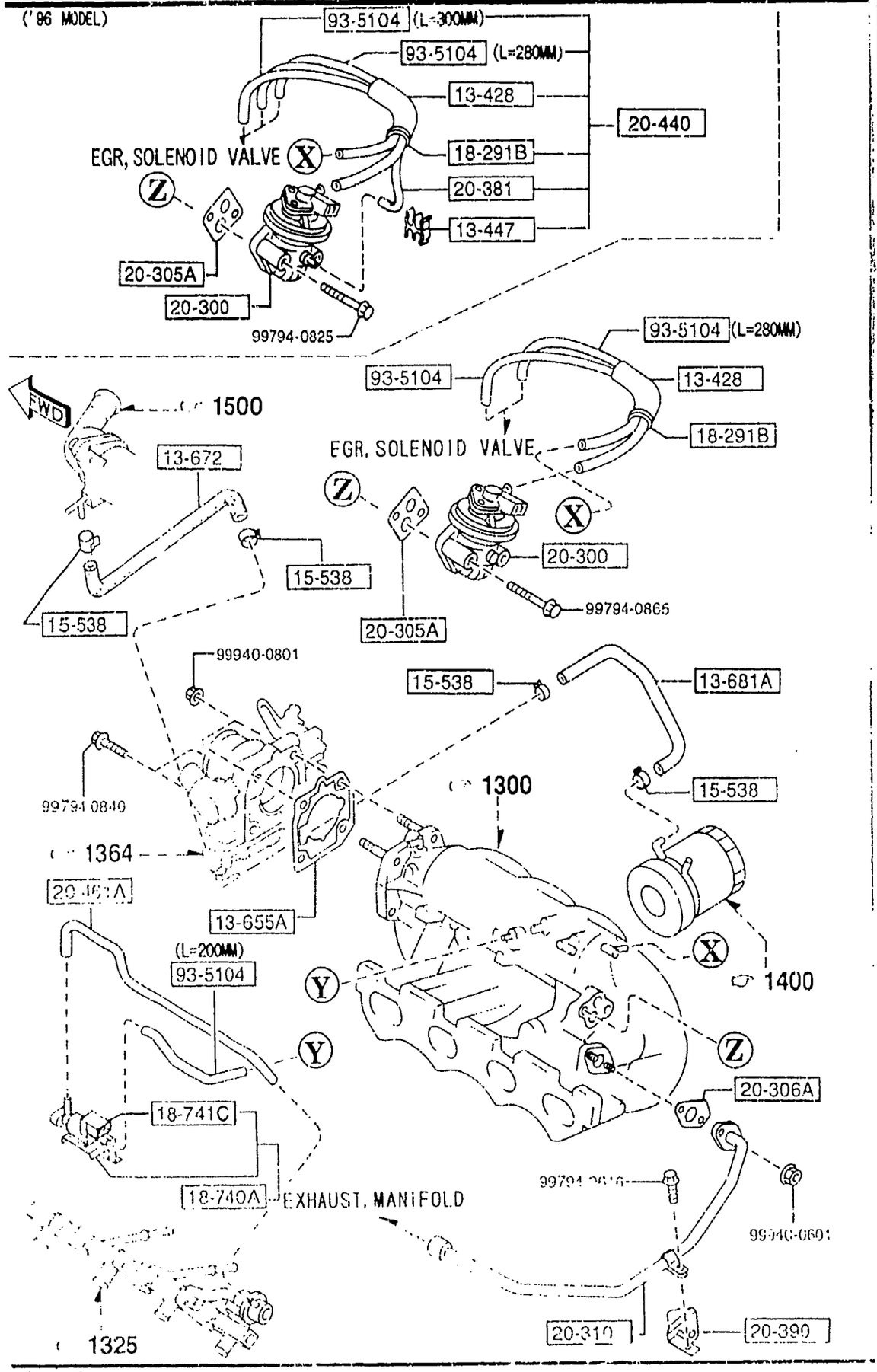


AUNA05

| PART NO. | QTY | MODEL/RESTRICTION | MODEL/RESTRICTION | MODEL/RESTRICTION | FROM-TO |
|---|---|---|---|---|---|
| 13-428 | | PROTECTOR | | | |
| BPS1-13-428A | 1 | ('96 MODEL) | | | |
| B367-13-428 | 1 | ('95 MODEL) | | | |
| 13-447 | | CLIP | | | |
| F801-13-447 | 1 | ('96 MODEL) | | | |
| 13-655A | | GASKET | | | |
| B6BF-13-655 | 1 | | | | |
| 13-672 | | HOSE,WATER | | | |
| BPE8-13-682 | 1 | | | | |
| 13-681A | | HOSE,WATER | | | |
| BPE8-13-601 | 1 | | | | |
| 15-538 | | CLAMP,WATER HOSE | | | |
| JF02-15-538 | 4 | | | | -5C01 |
| B6BF-15-538 | 4 | | | | 5C01- |
| 18-291B | | CLAMP,HOSE | | | |
| HE21-18-291 | 1 | | | | |
| 18-740A | | VALVE,SOLENOID | | | |
| B69N-18-740 | 1 | | | | |
| 18-741C | | VALVE,SOLENOID | | | |
| FS05-18-741 | 1 | | | | |
| 20-300 | | VALVE,E.G.R. | | | |
| Z505-20-300 | 1 | | | | -5801 |
| B6BF-20-300 | 1 | | | | 5801- |
| 20-305A | | GASKET,E.G.R. VALVE | | | |
| JE27-20-305 A (JE27-20-305A) | 1 | | | | -5907 |
| JE27-20-305A | 1 | | | | 5907- |
| 20-306A | | GASKET | | | |
| JE06-20-306 | 1 | | | | |

5801 NA3** -700842
5907 NA3** -703015
5C01 NA3** -706448

## 1370 EMISSION CONTROL SYSTEM (INLET SIDE)

('96 MODEL)

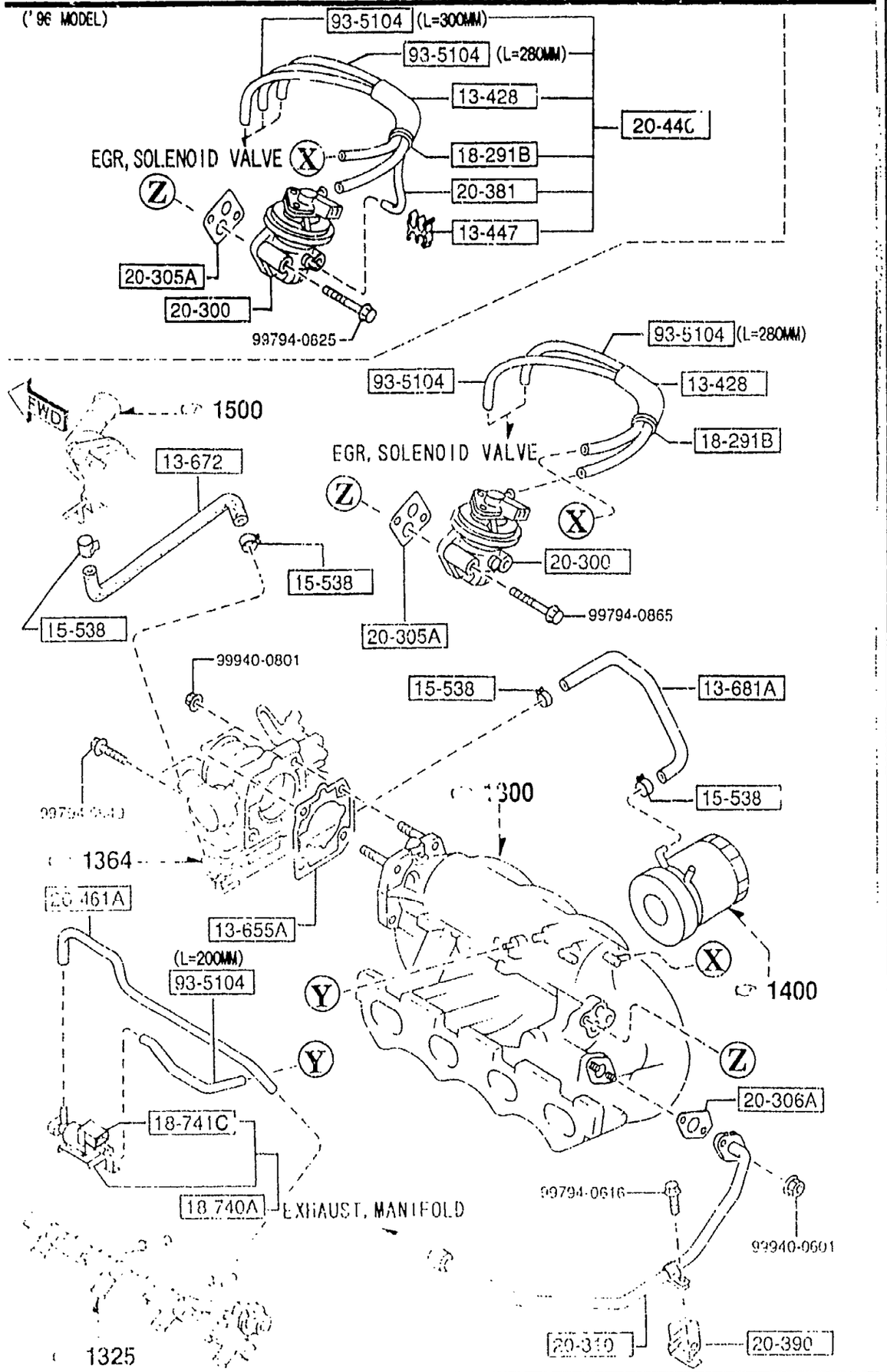


| PART NO. | QTY | MODEL/RESTRICTION | MODEL/RESTRICTION | MODEL/RESTRICTION | FROM-TO |
|---|---|---|---|---|---|
| 20-310 | | PIPE,E.G.R. | | | |
| BPE8-20-310 | 1 | | | | |
| 20-381 | | TUBE,VACUUM | | | |
| BPS1-20-381 | 1 | ('96 MODEL) | | | |
| 20-390 | | BRACKET,E.G.R.PIPE | | | |
| BPE8-20-390 | 1 | | | | |
| 20-440 | | TUBE,VACUUM | | | |
| *BPS1-20-440A | 1 | | | | |
| 20-461A | | TUBE,VACUUM | | | |
| BPE8-20-461 | 1 | | | | |
| 93-5104 | | HOSE | | | |
| 99351-04999 | 1 | L=1M CUT IT TO USE | | | |

## 1400 OIL PUMP & FILTER

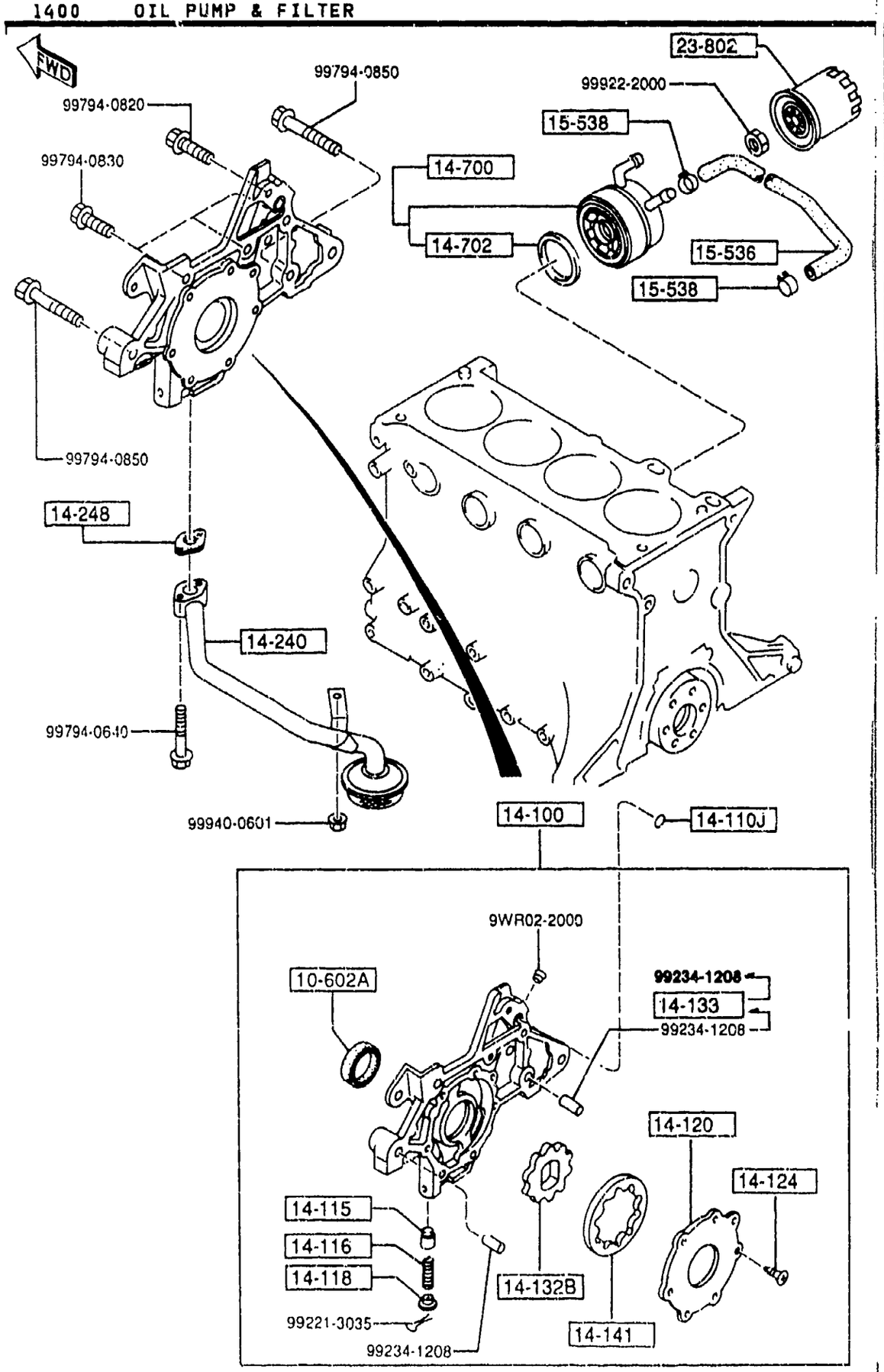


| PART NO. | QTY | MODEL/RESTRICTION | MODEL/RESTRICTION | MODEL/RESTRICTION | FROM-TO |
|---|---|---|---|---|---|
| 10-602A | | SEAL,OIL | | | |
| B3C7-10-602A | 1 | NON ASBESTOS | | | |
| 14-100 | | PUMP,OIL | | | |
| B6S8-14-100G | 1 | | | | -6305 |
| A (B6S8-14-100H) | | | | | |
| *B6S8-14-100H | 1 | | | | 6305- |
| 14-110J | | RING,'O' | | | |
| FE1H-14-122A | 1 | | | | |
| 14-115 | | PLUNGER,CONTROL | | | |
| JF01-14-115 | 1 | | | | -6305 |
| *FS01-14-115 | 1 | | | | 6305- |
| 14-116 | | SPRING,PRESSURE | | | |
| 0324-14-116B | 1 | | | | |
| 14-118 | | SHEET,SPRING | | | |
| 0222-14-118 | 1 | | | | |
| 14-120 | | COVER,OIL PUMP | | | |
| B6BF-14-121 | 1 | | | | |
| 14-124 | | SCREW,OIL PUMP COVER | | | |
| FE1H-14-124 | 7 | | | | |
| 14-132B | | GEAR,INNER | | | |
| B6S7-14-132 | 1 | | | | |
| 14-133 | | PIN,GROOVED | | | |
| *B6S8-14-133 | 2 | | | | 6305-6601 |
| 14-141 | | GEAR,OUTER | | | |
| B6S7-14-141 | 1 | | | | |
| 14-240 | | STRAINER,OIL | | | |
| BPE8-14-240 | 1 | | | | |
| 14-248 | | GASKET,OIL STRAINER | | | |

6305 NA3** -714961
6601 NA3** -719621

## 1400 OIL PUMP & FILTER

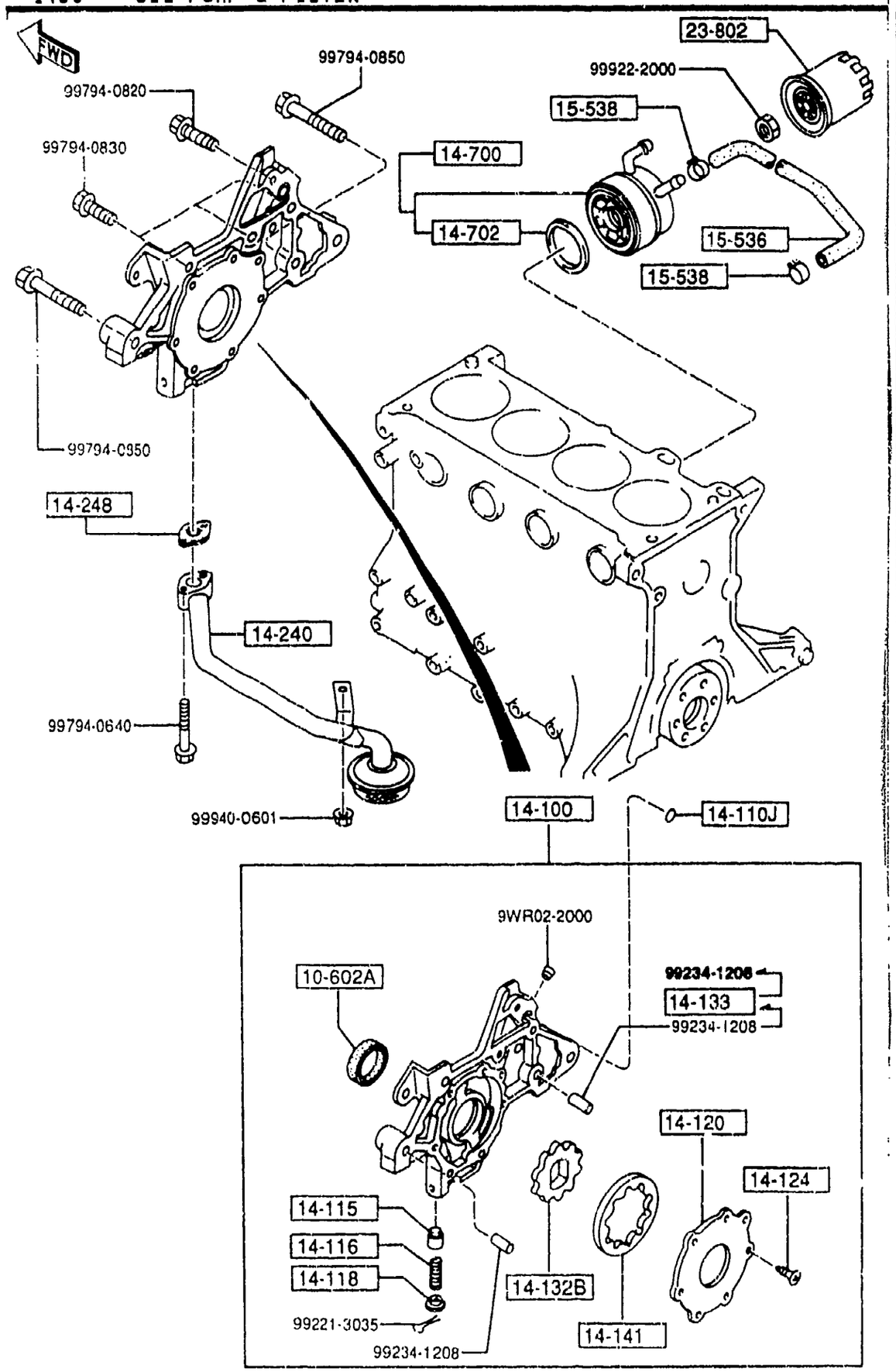


| PART NO. | QTY | MODEL/RESTRICTION | MODEL/RESTRICTION | MODEL/RESTRICTION | FROM-TO |
|---|---|---|---|---|---|
| CONT'D | | | | | |
| B6BF-14-248 | 1 | | | | |
| 14-700 | | COOLER,OIL | | | |
| BPE8-14-700 | 1 | | | | |
| 14-702 | | GASKET | | | |
| KL01-14-702A | 1 | | | | |
| 15-536 | | HOSE,WATER-OIL COOLE R IN. | | | |
| BPE8-15-536 | 1 | | | | |
| 15-538 | | CLAMP,WATER HOSE | | | |
| JF02-15-538 | 2 | | | | -5C01 |
| B6BF-15-538 | 2 | | | | 5C01- |
| 23-802 | | CARTRIDGE,OIL FILTER | | | |
| B6Y1-14-302 AN(B6Y1-14-302A) | 1 | (MAZDA MARK,T. ROKI) | | | -5A01 |
| B6Y1-14-302A | 1 | (MAZDA MARK T.ROKI) | | | 5A01- |

5A01 NA3** -703035
5C01 NA3** -706448

## 1500 COOLING SYSTEM

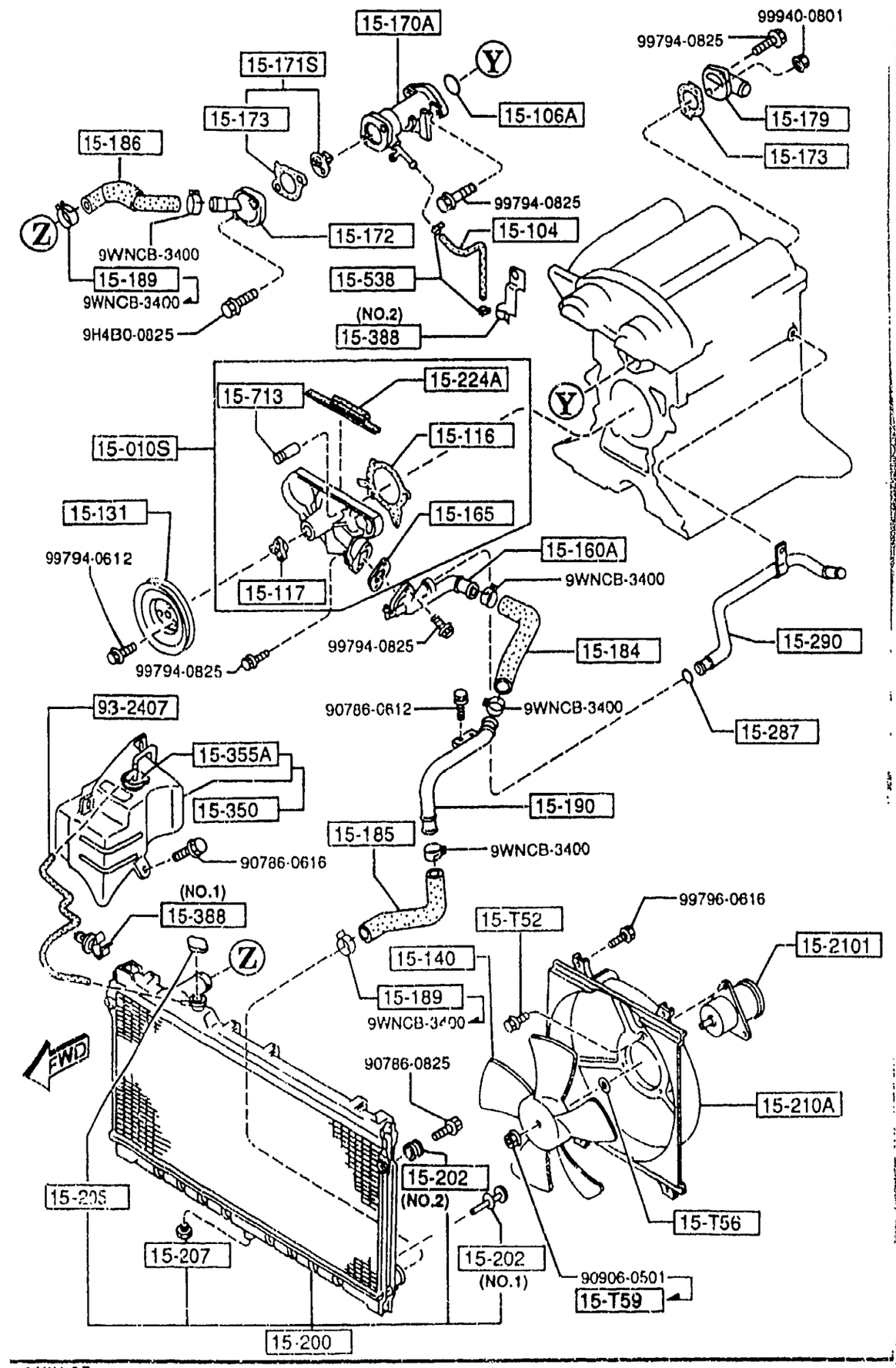


AUNA05

| PART NO. | QTY | MODEL/RESTRICTION | MODEL/RESTRICTION | MODEL/RESTRICTION | FROM-TO |
|---|---|---|---|---|---|
| 15-T52 | | SCREW,MOTOR-ELECTRIC FAN | | | |
| B6S8-15-T52 | 3 | | | | |
| 15-T56 | | WASHER,MOUNT.-FAN | | | |
| B61P-15-T56 | 1 | | | | 5508- |
| 15-T59 | | NUT,COOLING FAN | | | |
| B595-15-T59 | 1 | | | | 5C01- |
| 15-010S | | PUMP SET,WATER | | | |
| 8ABB-15-010 A (8ABB-15-010A) | 1 | | | | -4917 |
| 8ABB-15-010A | 1 | | | | 4917- |
| 15-104 | | HOSE,WATER BY-PASS | | | |
| B61P-15-261A | 1 | | | | |
| 15-106A | | RING,'O'-WATER PUMP | | | |
| B61P-15-106 | 1 | | | | |
| 15-116 | | GASKET,WATER PUMP | | | |
| B6BF-15-116 | 1 | | | | |
| 15-117 | | BOSS,W.PUMP PULLEY | | | |
| E301-15-117 | 1 | | | | |
| 15-131 | | PULLEY,WATER PUMP | | | |
| B3C7-15-131 | 1 | | | | |
| 15-140 | | FAN,COOLING | | | |
| B61P-15-140A | 1 | (MT) | | | |
| B64J-15-140 | 1 | CALSONIC (AT) | | | |
| 15-160A | | INLET,WATER PUMP | | | |
| B61P-15-160 | 1 | | | | |
| 15-165 | | GASKET,W.PUMP INLET | | | |
| B621-15-165 | 1 | NON ASBESTOS | | | |

4917 NA35* -603196
5508 NA35* -620210
5C01 NA3** -706448

## 1500 COOLING SYSTEM

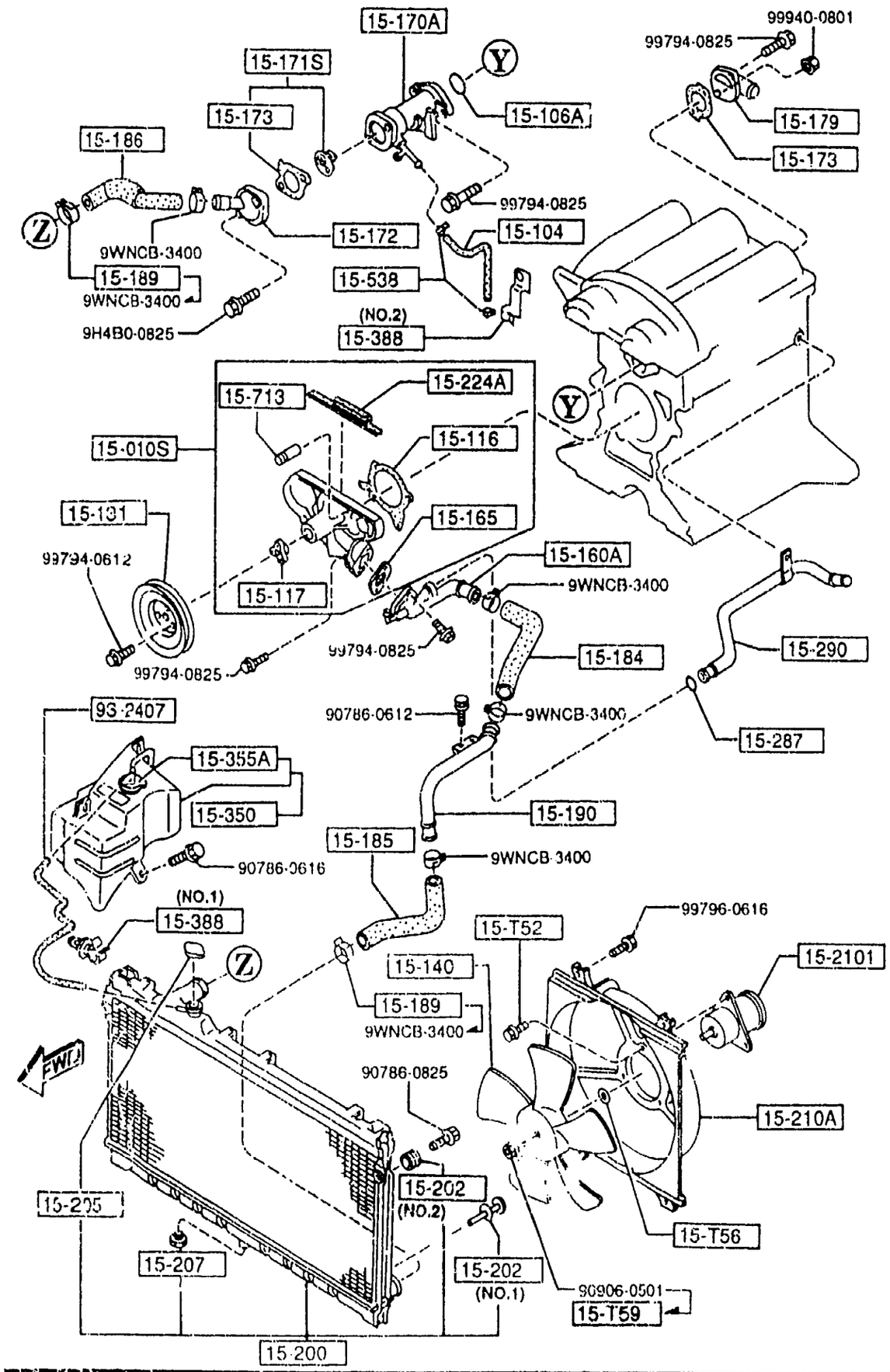


| PART NO. | QTY | MODEL/RESTRICTION | MODEL/RESTRICTION | MODEL/RESTRICTION | FROM-TO |
|---|---|---|---|---|---|
| 15-170A | | COVER,THERMO | | | |
| BPE8-15-170A | 1 | | | | |
| 15-171S | | THERMOSTAT SET | | | |
| 8AB8-15-171 | 1 | | | | |
| 15-172 | | COVER,THERMOSTAT | | | |
| BPE8-15-172 | 1 | | | | |
| 15-173 | | GASKET,THERMOSTAT CO VER | | | |
| B621-15-173 | 2 | NON ASBESTOS | | | |
| 15-179 | | OUTLET,WATER | | | |
| BPE8-15-179 | 1 | | | | |
| 15-184 | | HOSE,WATER | | | |
| B61P-15-184 | 1 | | | | |
| 15-185 | | HOSE,WATER | | | |
| BPE8-15-185 | 1 | | | | |
| 15-186 | | HOSE,WATER | | | |
| BPE8-15-186 | 1 | | | | |
| 15-189 | | CLAMP,HOSE | | | |
| B366-15-182 | 2 | | | | -5501 |
| 15-190 | | PIPE,WATER | | | |
| B61P-15-190 | 1 | | | | |
| 15-200 | | RADIATOR | | | |
| BPE8-15-200 | 1 | (MT) | | | |
| BPE9-15-200 | 1 | (AT) | | | |
| 15-202 | | RUBBER,MOUNT | | | |
| B61P-15-202 | 2 | (ILLUST. NO.1) | | | |
| N326-15-202 | 2 | (ILLUST. NO.2) | | | |
| 15-205 | | CAP,RADIATOR | | | |
| D316-15-205 | | CALSONIC | | | |

5501 NA35* -620210

## 1500 COOLING SYSTEM

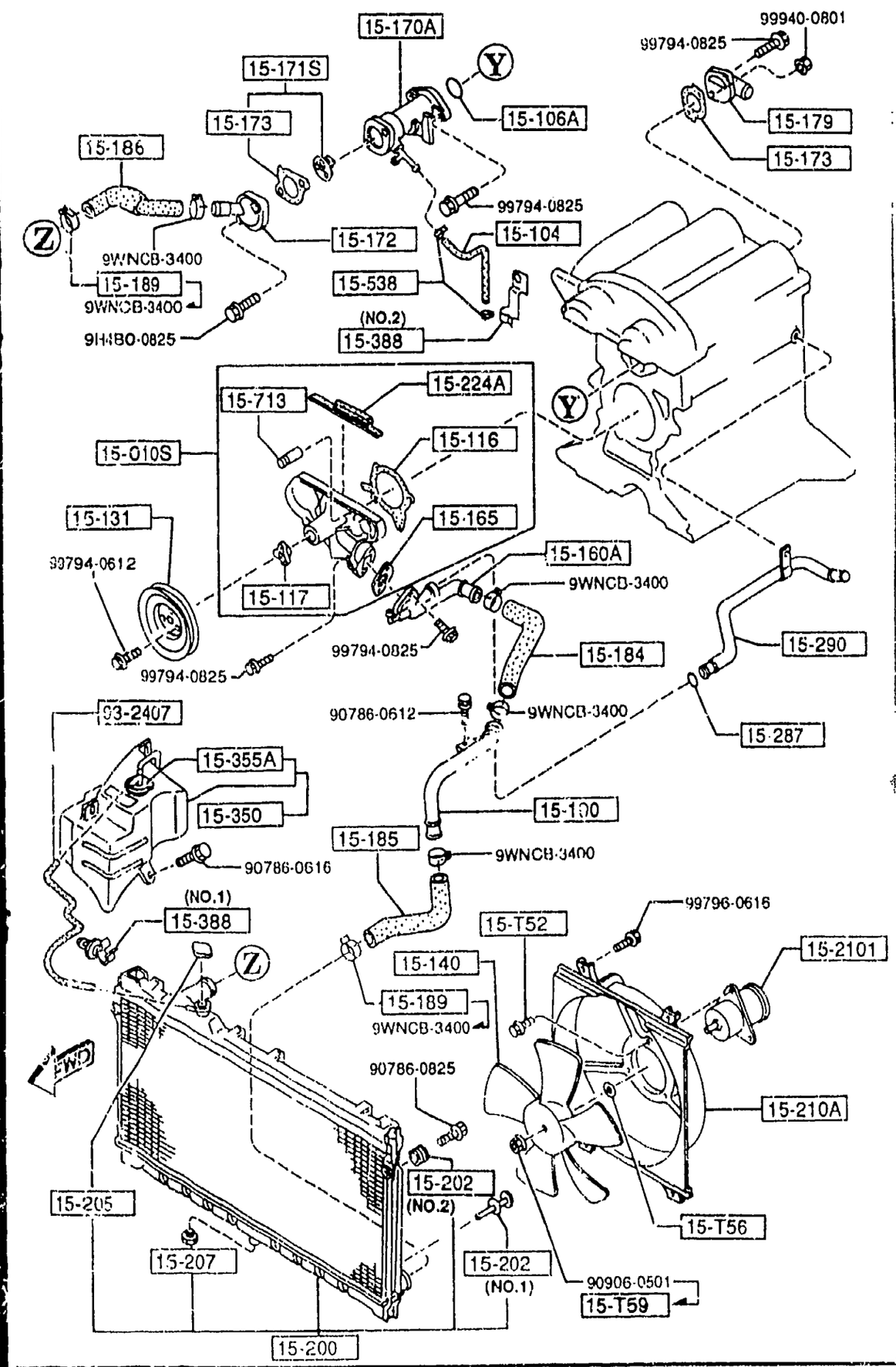


| PART NO. | QTY | MODEL/RESTRICTION | MODEL/RESTRICTION | MODEL/RESTRICTION | FROM-TO |
|---|---|---|---|---|---|
| CONT'D | 1 | | | | |
| 15-207 | | COCK,DRAIN | | | |
| NF01-15-203 | 1 | CALSONIC | | | |
| 15-210A | | COWLING,RADIATOR | | | |
| B61P-15-210B | 1 | | | | |
| 15-2101 | | FAN DRIVE | | | |
| B61P-15-150B | 1 | (MT) | | | |
| B64J-15-150A | 1 | (AT) | | | |
| 15-224A | | RUBBER,SEAL | | | |
| B660-10-543B | 1 | | | | |
| 15-287 | | RING,'O'-WATER BYPAS S | | | |
| E301-15-287 | 1 | | | | |
| 15-290 | | PIPE,BYPASS | | | |
| BPE8-15-290 | 1 | | | | |
| 15-350 | | TANK,SUB-RADIATOR | | | |
| B61P-15-350D | 1 | | | | |
| 15-355A | | CAP,SUB TANK | | | |
| B61P-15-355A | 1 | | | | |
| 15-388 | | CLIP,HOSE-SUB T.& WA TER H | | | |
| F201-15-388A | 1 | (ILLUST. NO.1) | | | |
| B61P-15-547 | 1 | (ILLUST. NO.2) | | | |
| 15-538 | | CLAMP,WATER HOSE | | | |
| JF02-15-538 | 2 | | | | -5C01 |
| B6BF-15-538 | 2 | | | | 5C01- |
| 15-713 | | SET PIN,SPRING | | | |
| F801-15-713 | 1 | | | | |
| 93-2407 | | HOSE,WATER | | | |
| 99324-07610 | 1 | | | | |

5C01 NA3** -706448

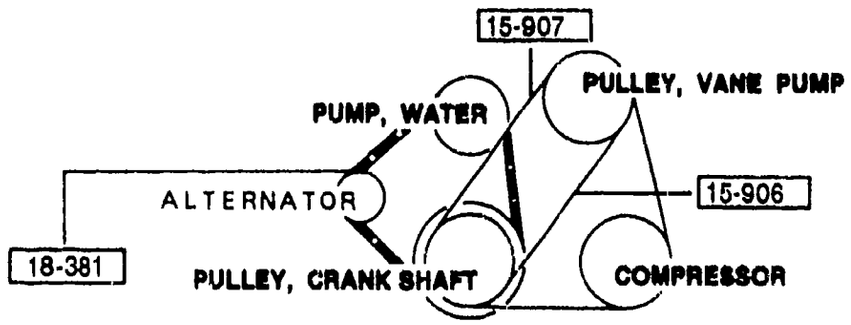


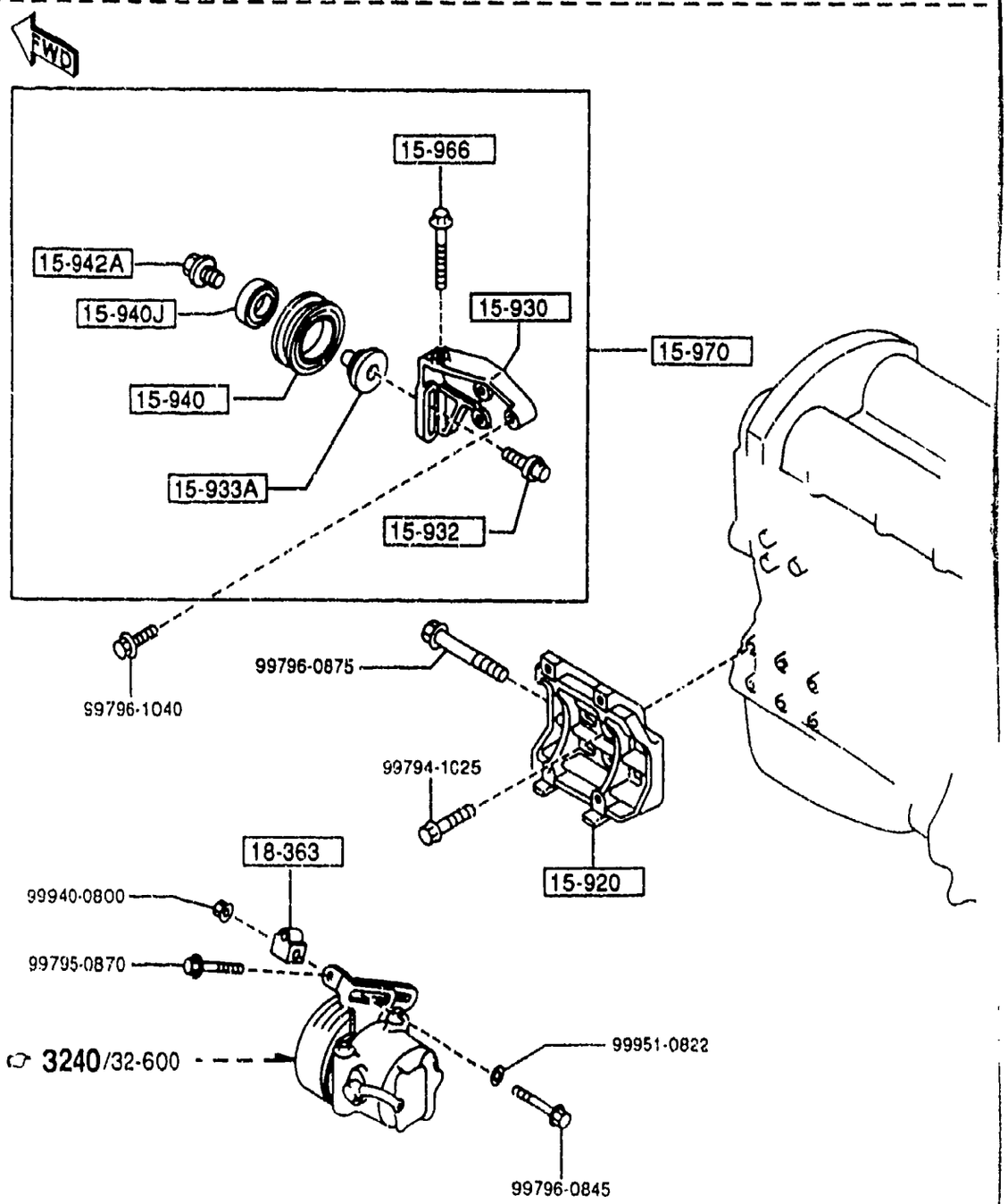




## 1580 -1 BRACKET, PULLEY & BELT

| PART NO. | QTY | MODEL/RESTRICTION | MODEL/RESTRICTION | MODEL/RESTRICTION | FROM-TO |
|---|---|---|---|---|---|
| 15-906 | | BELT'V' | | | |
| B61P-15-907A | 1 | 4PK-855 MITSUBOSHI (W/O AIR CON.+W/POWER STEERING) | | | |
| 15-907 | | BELT'V' | | | |
| B3C7-15-907C | 1 | 4PK L=848MM (W/AIR CON.+W/O POWER STEERING) | | | |
| BPF3-15-909 | 1 | (A) 4PK L=940MM BAND O (W/AIR CON.+W/POWER STEERING) | | | |
| BPE8-15-908 | 1 | (E) GOODYEAR 4PK848 (W/AIR CON.+W/O POWER STEERING) | | | 4C01- |
| BPE8-15-909 | 1 | (A) GOODYEAR 4PK940 (W/AIR CON.+W/POWER STEERING) | | | 4C01- |
| 15-920 | | BRACKET,COMPRESSOR | | | |
| BPE8-15-810A | 1 | (A) (W/AIR CON.) | | | |
| 15-930 | | BRACKET,IDLE PULLEY | | | |
| BP01-15-951 | 1 | (A) (W/AIR CON.+W/O POWER STEERING) | | | |
| 15-932 | | SHAFT,PULLEY | | | |
| B631-15-932 | 1 | (A) (W/AIR CON.+W/O POWER STEERING) | | | |
| 15-933A | | COLLAR | | | |
| BP01-15-933 | 1 | (A) (W/AIR CON.+W/O POWER STEERING) | | | |
| 15-940 | | PULLEY,IDLE | | | |
| BP01-15-940 | 1 | (A) (W/AIR CON.+W/O POWER STEERING) | | | |
| 15-940J | | BEARING | | | |
| 99606-83020 | 1 | (W/AIR CON.+W/O POWER STEERING) | | | |

4C01 NA35* -609691

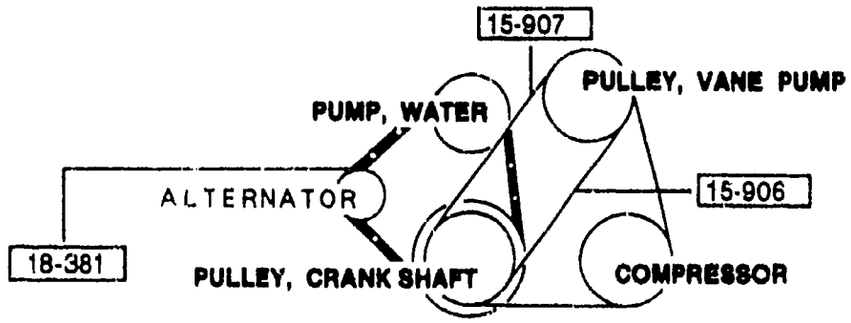


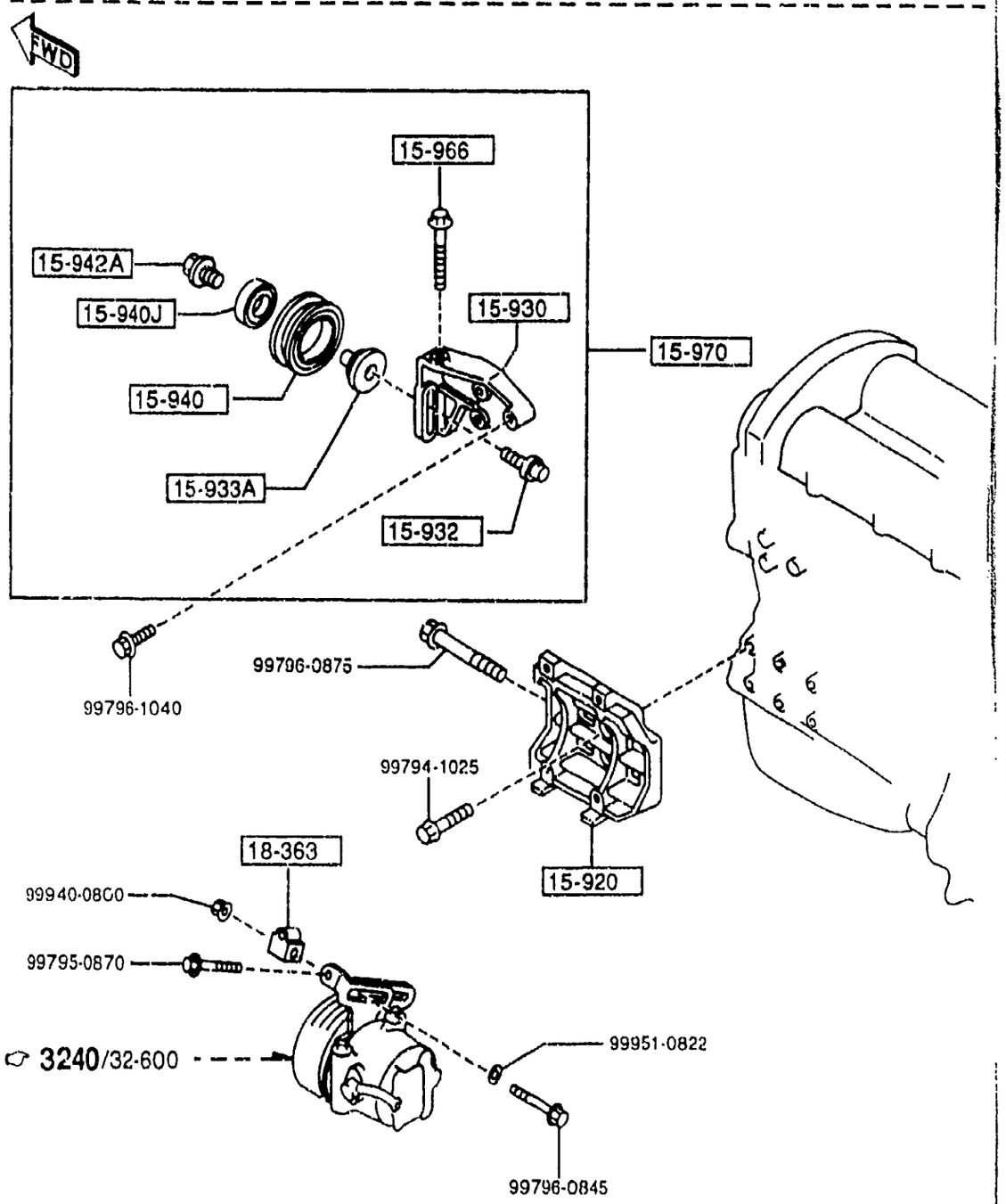






| PART NO. | QTY | MODEL/RESTRICTION | MODEL/RESTRICTION | MODEL/RESTRICTION | FROM-TO |
|---|---|---|---|---|---|
| 15-942A | | COLLAR | | | |
| E564-15-942 | 1 | (A) (W/AIR CON.+W/O POWER STEERING) | | | |
| 15-966 | | BOLT,ADJUST | | | |
| E564-15-934 | 1 | (A) (W/AIR CON.+W/O POWER STEERING) | | | |
| 15-970 | | PULLEY,IDLE | | | |
| BP01-15-930 | 1 | (A) (W/AIR CON.+W/O POWER STEERING) | | | |
| 18-363 | | SPACER,STRAP | | | |
| FP02-18-363 | 1 | (W/O AIR CON.+W/POWER STEERING) | | | |
| 18-381 | | BELT'V' | | | |
| *B596-18-381 | 1 | 4PK L=885 GOOD YEAR | | | |
| *B6BF-18-381 | 1 | 4PK L=885 BANDO | | | |

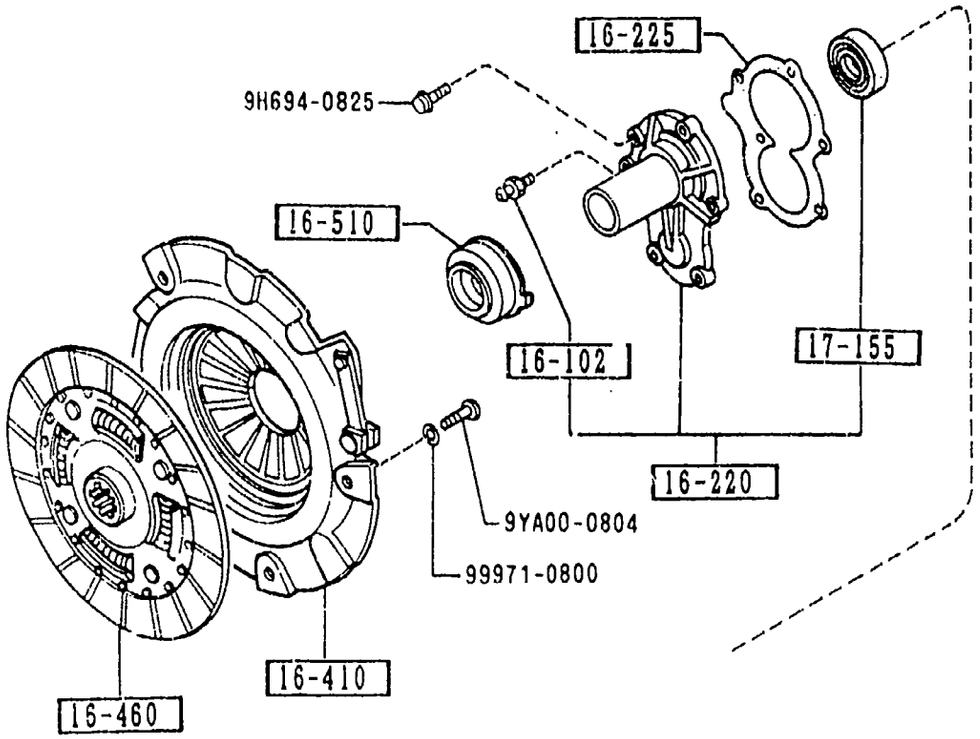


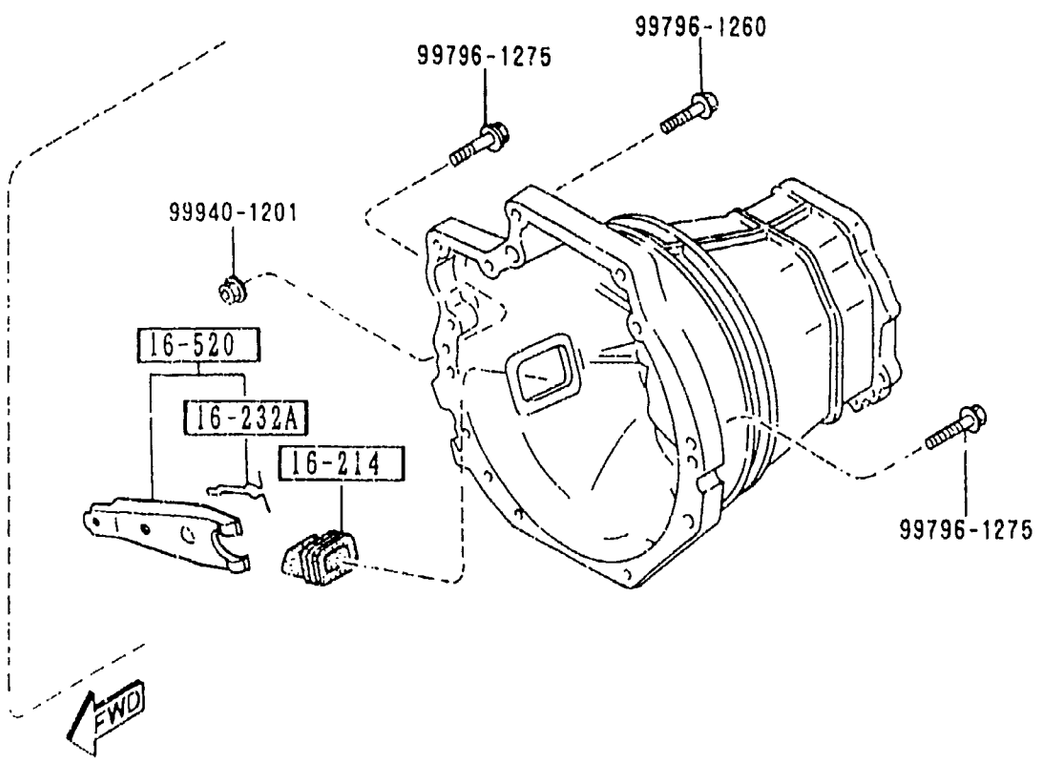


## 1600 -1 * CLUTCH DISC & COVER

| PART NO. | QTY | MODEL/RESTRICTION | MODEL/RESTRICTION | MODEL/RESTRICTION | FROM-TO |
|---|---|---|---|---|---|
| 16-102 | | PIN,PIVOT-CLUTCH REL .FORK | | | |
| 0603-16-102B | 1 | | | | |
| 16-214 | | COVER,DUST-CLUTCH FO RK | | | |
| FE51-16-214 A (FE51-16-214A) | 1 | | | | -5401 |
| FE51-16-214A | 1 | | | | 5401- |
| 16-220 | | COVER,FRONT CLUTCH | | | |
| B622-16-220 AN(B622-16-220A) | 1 | | | | -5801 |
| B622-16-220A | 1 | | | | 5801- |
| 16-225 | | GASKET,FRONT COVER | | | |
| FE50-16-225A | 1 | | | | |
| 16-232A | | SUPPORTER,FORK | | | |
| 1416-16-232A | 1 | | | | |
| 16-410 | | COVER,CLUTCH | | | |
| BP07-16-410 | 1 | | | | |
| 16-460 | | DISC,CLUTCH | | | |
| BP07-16-460 | 1 | | | | |
| 16-510 | | COLLAR,CLUTCH REL. | | | |
| B622-16-510 | 1 | | | | |
| 16-520 | | FORK,CLUTCH RELEASE | | | |
| B622-16-520 | 1 | | | | |
| 17-155 | | SEAL,OIL | | | |
| H501-17-103 | 1 | | | | |

5401 NA35* -619598
5801 NA3** -700842

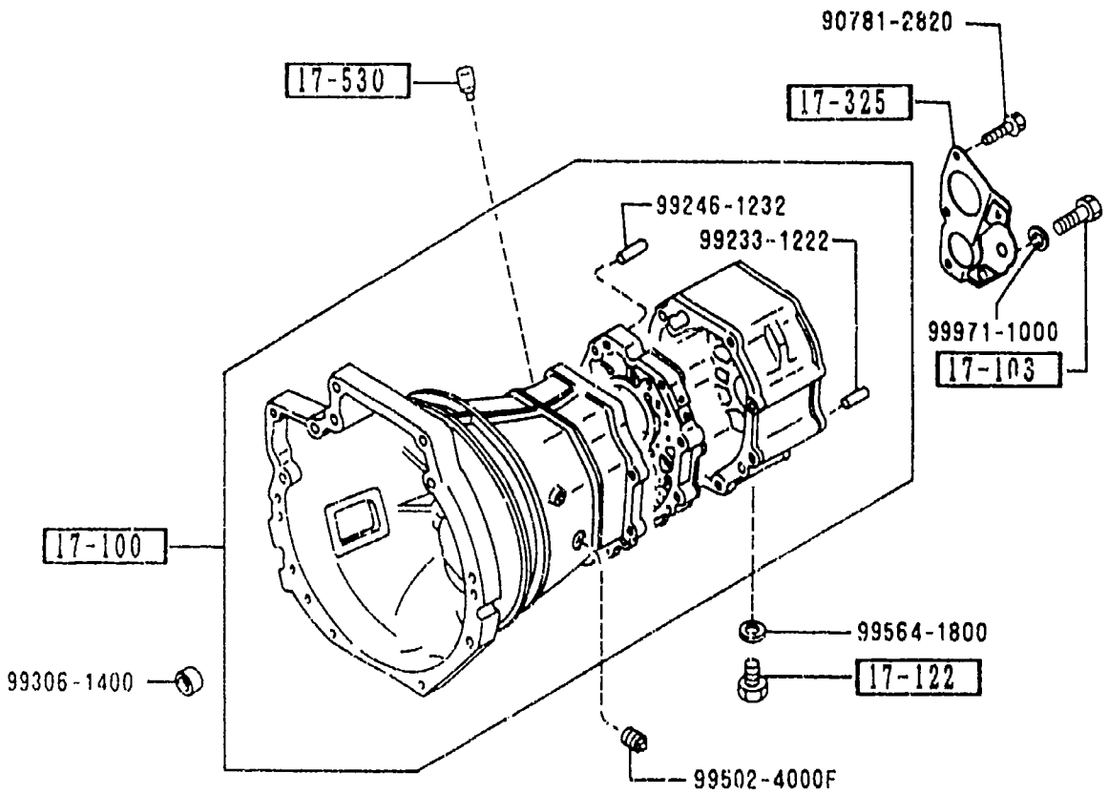


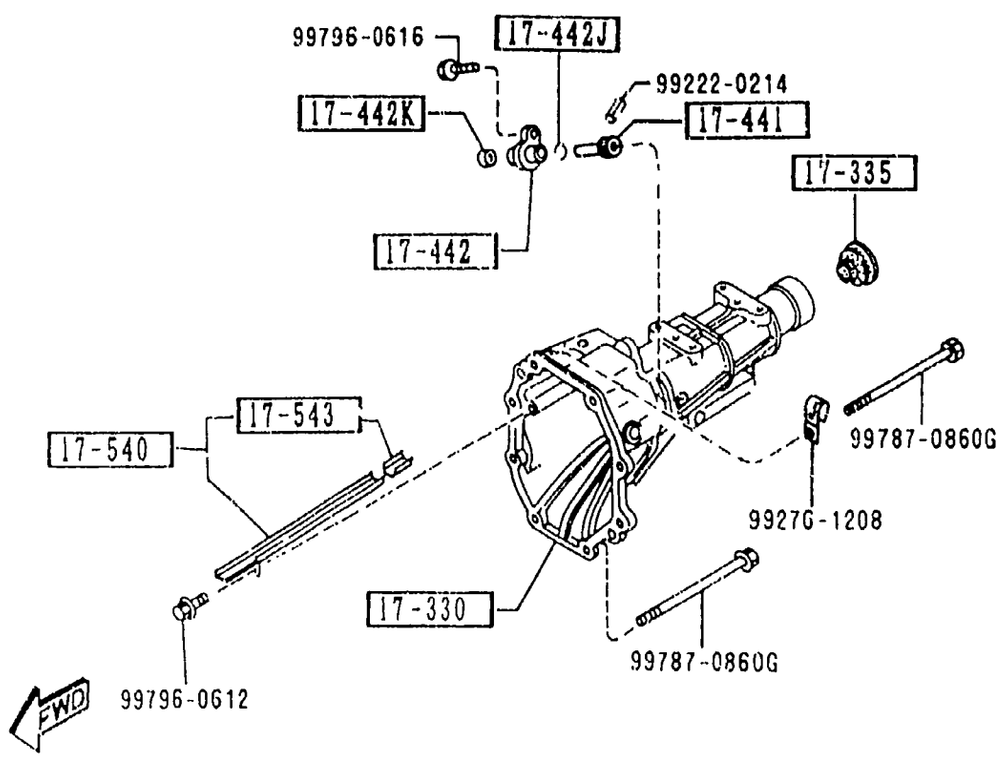


| PART NO. | QTY | MODEL/RESTRICTION | MODEL/RESTRICTION | MODEL/RESTRICTION | FROM-TO |
|---|---|---|---|---|---|
| 17-100<br>M526-17-100A | 1 | CASE,T/MISSION | | | |
| 17-103<br>M501-17-103 | 2 | BOLT | | | |
| 17-122<br>0810-17-121 | 1 | PLUG,MAGNET | | | |
| 17-325<br>M501-17-370A | 1 | COVER,BEARING | | | |
| 17-330<br>M519-17-330 | 1 | HOUSING,EXTENSION | | | |
| 17-335<br>M507-17-335A | 1 | SEAL,OIL | | | |
| 17-441<br>M510-17-441 | 1 | GEAR,DRIVEN<br>N=22 | | | |
| 17-442<br>1669-17-442B | 1 | SLEEVE,SPEEDOMETER | | | |
| 17-442J<br>1011-17-443 | 1 | RING,'O' | | | |
| 17-442K<br>99586-08166 | 1 | SEAL,OIL | | | |
| 17-530<br>0884-17-530 | 1 | BREATHER,AIR-T/MISSI<br>ON | | | |
| 17-540<br>M509-17-540 | 1 | PASS,OIL | | | |
| 17-543<br>M501-17-543A | 1 | RUBBER,SEAL | | | |

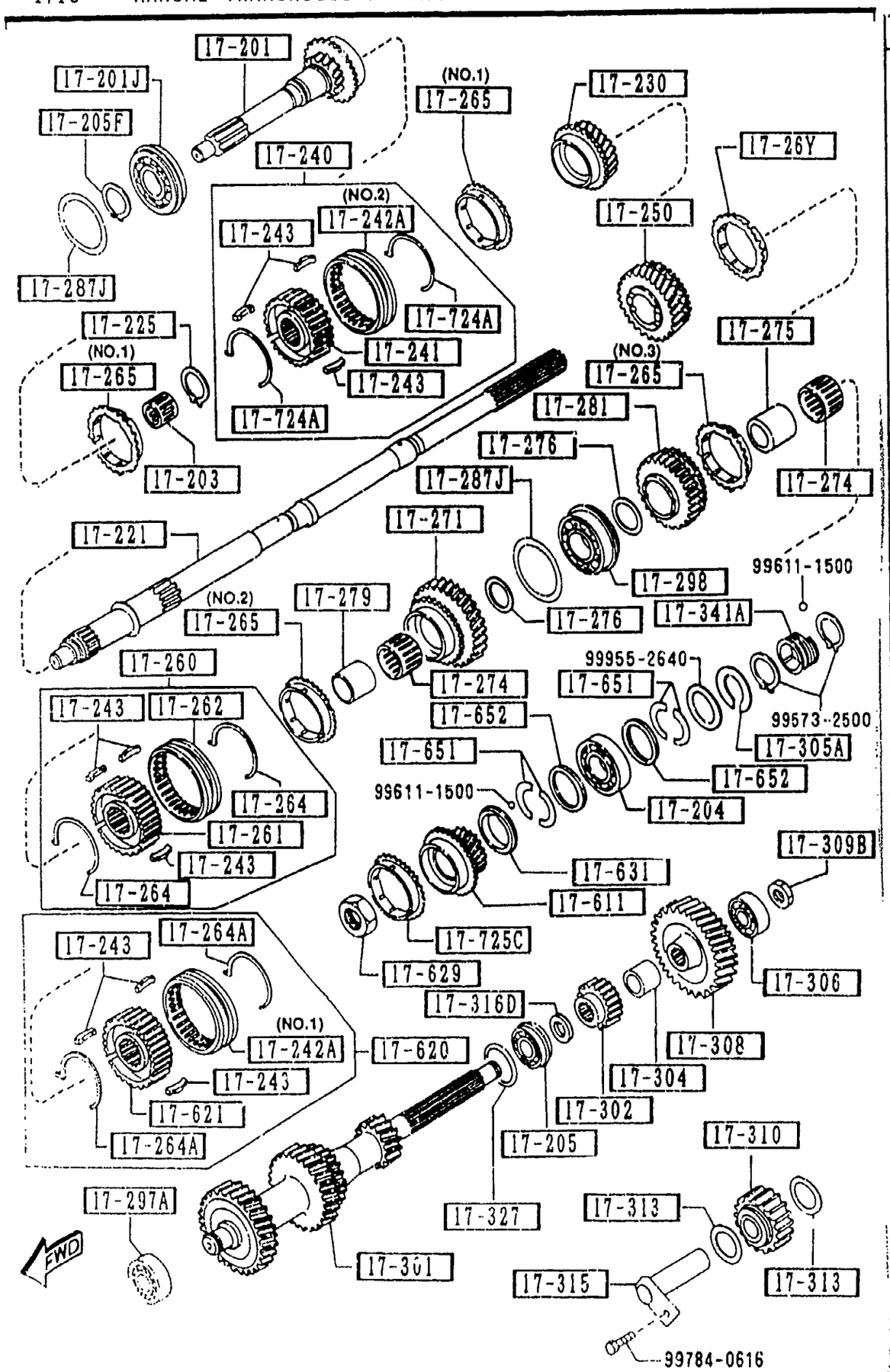


| PART NO. | QTY | MODEL/RESTRICTION | MODEL/RESTRICTION | MODEL/RESTRICTION | FROM-TO |
|---|---|---|---|---|---|
| 17-201 | | GEAR,MAIN DRIVE | | | |
| M516-17-201 | 1 | | | | |
| 17-201J | | BEARING,BALL-MAIN DRIVE GEAR | | | |
| M502-17-295C | 1 | | | | |
| 17-203 | | BEARING,NEEDLE | | | |
| M501-17-210A | 1 | | | | |
| 17-204 | | BEARING,BALL-MAIN SHAFT | | | |
| M503-17-204 | 1 | | | | -4C01 |
| 99606-63053 | 1 | | | | 4C01- |
| 17-205 | | BEARING,ROLLER | | | |
| R502-17-306A | 1 | | | | -5501 |
| M506-17-297 | 1 | | | | 5501- |
| 17-205F | | RING,RETAINING | | | |
| M501-17-205 | 1 | | | | |
| 17-221 | | SHAFT,MAIN | | | |
| M505-17-221B | 1 | | | | |
| 17-225 | | RING,SNAP | | | |
| 0317-17-225 | 1 | | | | |
| 17-230 | | GEAR,3RD | | | |
| M513-17-231B | 1 | | | | |
| 17-240 | | HUB SET,CLUTCH-3RD & 4TH | | | |
| M517-17-240 | 1 | | | | |
| 17-241 | | HUB,CLUTCH | | | |
| M501-17-241C | 1 | | | | |
| 17-242A | | SLEEVE,CLUTCH HUB | | | |
| F401-17-242A | 1 | (ILLUST. NO.1) | | | |
| M502-17-242 | 1 | (ILLUST. NO.2) | | | |
| 17-243 | | KEY,SYNCHRONIZER | | | |

4C01 NA35* -609691
5501 NA35* -620210

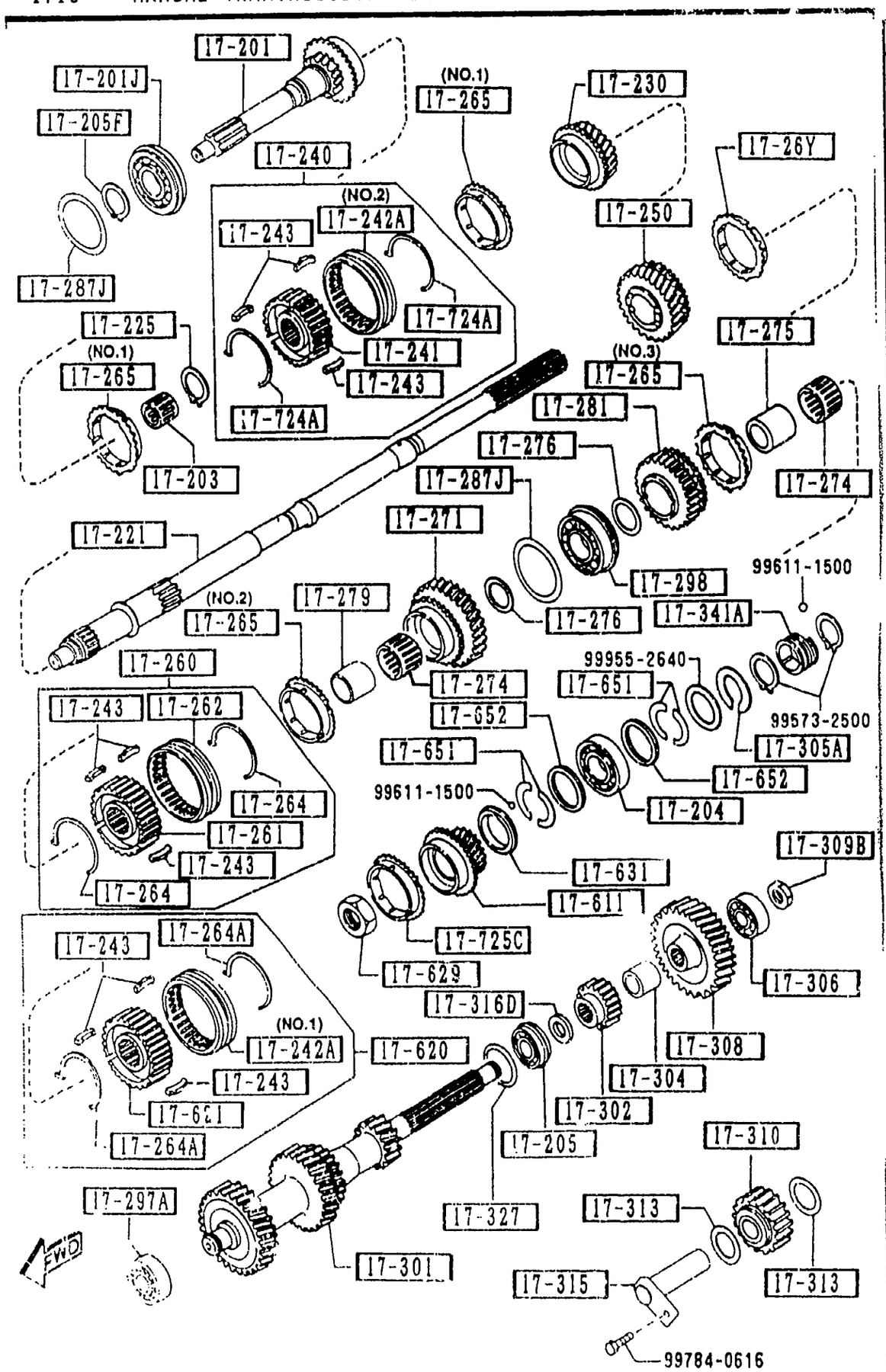


| PART NO. | QTY | MODEL/RESTRICTION | MODEL/RESTRICTION | MODEL/RESTRICTION | FROM-TO |
|---|---|---|---|---|---|
| CONT'D | | | | | |
| F401-17-243A | 9 | | | | |
| 17-250 | | GEAR,2ND | | | |
| M520-17-251A | 1 | | | | |
| 17-26Y | | RING,SYNCHRONIZER | | | |
| R504-17-26Y | 1 | | | | |
| 17-260 | | HUB SET,CLUTCH-1ST & 2ND | | | |
| M517-17-260 | 1 | | | | |
| 17-261 | | HUB,CLUTCH | | | |
| M511-17-261 | 1 | | | | |
| 17-262 | | SLEEVE,CLUTCH HUB | | | |
| M505-17-262 | 1 | | | | |
| 17-264 | | SPRING,SYNCHRO. KEY | | | |
| G401-17-264 | 2 | | | | |
| 17-264A | | SPRING,SYNCHRONIZER | | | |
| F401-17-264A | 2 | | | | |
| 17-265 | | RING,SYNCHRONIZER | | | |
| G501-17-265A | 2 | (ILLUST. NO.1) | | | |
| M502-17-265C | 1 | (ILLUST. NO.2) | | | |
| M504-17-265A | 1 | (ILLUST. NO.3) | | | |
| 17-271 | | GEAR,1ST | | | |
| M516-17-271A | 1 | | | | |
| 17-274 | | BEARING,NEEDLE | | | |
| 4069-17-283A | 2 | | | | |
| 17-275 | | RACE,INNER | | | |
| 4069-17-284E | 1 | | | | |
| 17-276 | | WASHER,THRUST | | | |
| 0259-17-274A | 2 | T=3.0MM | | | |
| 0259-17-276 | | T=2.2MM | | | |

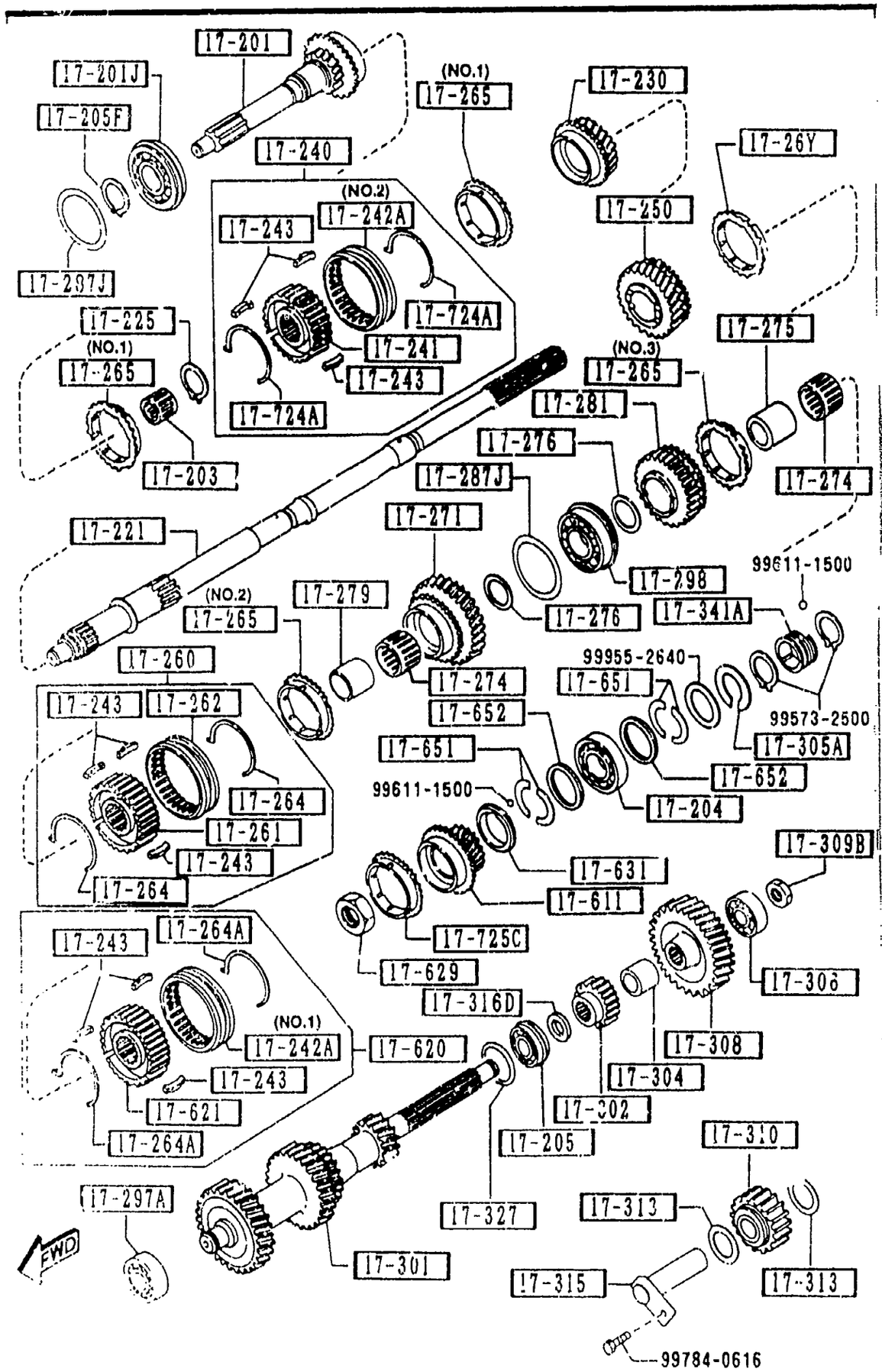






| PART NO. | QTY | MODEL/RESTRICTION | MODEL/RESTRICTION | MODEL/RESTRICTION | FROM-TO |
|---|---|---|---|---|---|
| CONT'D | | | | | |
| | 2 | | | | |
| 0259-17-277 | 2 | T=2.7MM | | | |
| 0259-17-278 | 2 | T=3.2MM | | | |
| 0259-17-279 | 2 | T=3.7MM | | | |
| +---------+ \| 17-279 \| +---------+ | | SLEEVE,GEAR | | | |
| 8540-17-275A | 1 | | | | |
| +---------+ \| 17-281 \| +---------+ | | GEAR,REVERSE | | | |
| M513-17-281 | 1 | | | | |
| +---------+ \| 17-287J \| +---------+ | | SHIM,ADJUST | | | |
| 99963-6310 | 2 | T=0.1MM | | | |
| 99963-6315 | 1 | T=0.15MM | | | |
| 99963-6330 | 2 | T=0.3MM | | | |
| +---------+ \| 17-297A \| +---------+ | | BEARING,BALL-COUNTER SHAFT G. | | | |
| M502-17-297A | 1 | | | | |
| +---------+ \| 17-298 \| +---------+ | | BEARING | | | |
| M502-17-298A | 1 | | | | |
| +---------+ \| 17-301 \| +---------+ | | GEAR,COUNTER SHAFT | | | |
| M528-17-301A | 1 | | | | |
| +---------+ \| 17-302 \| +---------+ | | GEAR,COUNTER REVERSE | | | |
| M516-17-302 | 1 | | | | |
| +---------+ \| 17-304 \| +---------+ | | SPACER | | | |
| M504-17-304 | 1 | | | | |
| +---------+ \| 17-305A \| +---------+ | | RING,RETAINING-BALL BEARING | | | |
| 0839-17-305B | 1 | | | | |
| +---------+ \| 17-306 \| +---------+ | | BEARING,BALL | | | |
| M502-17-299B | 1 | | | | -4C01 |

4C01 NA35* -609691

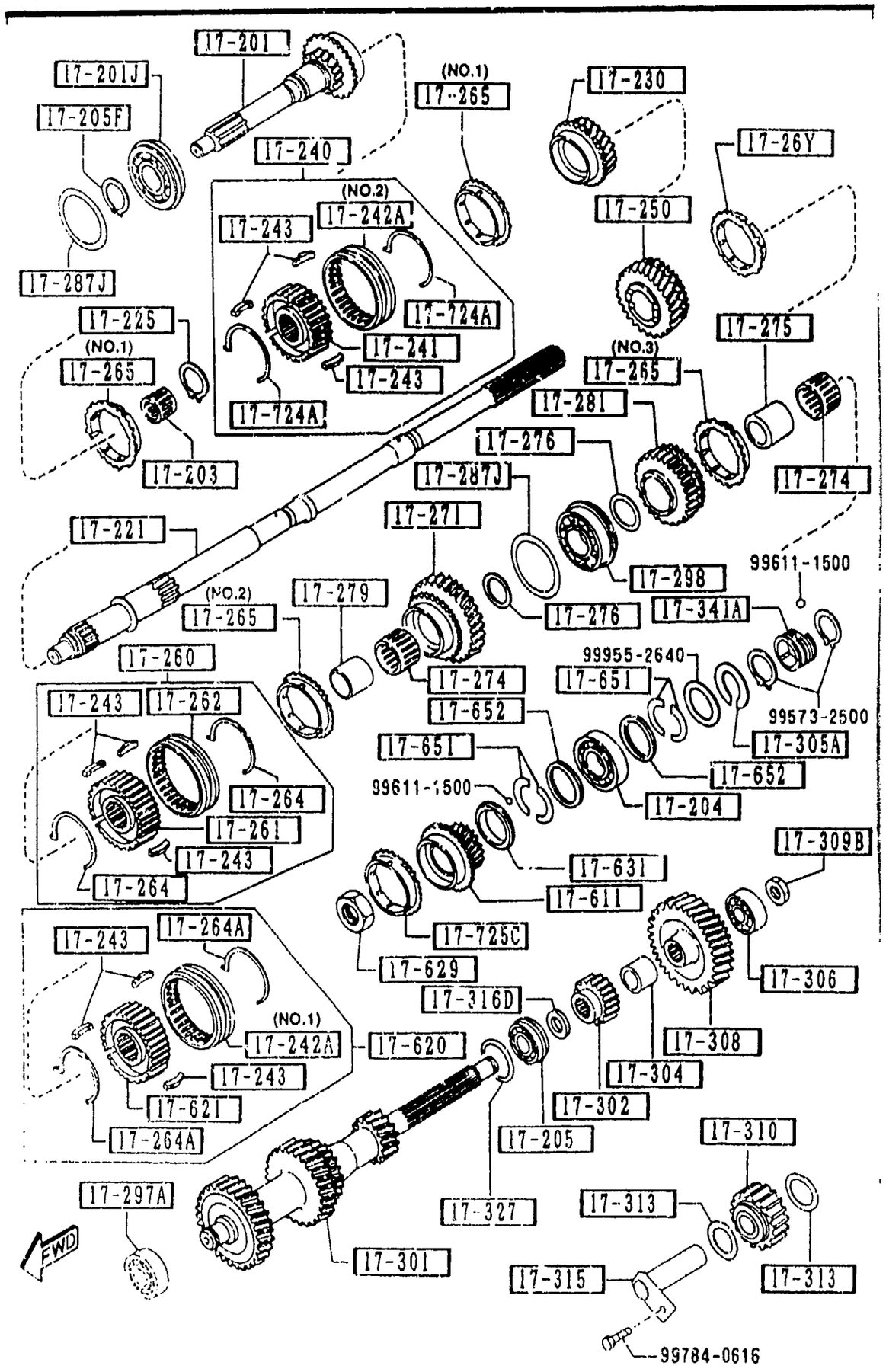






| PART NO. | QTY | MODEL/RESTRICTION | MODEL/RESTRICTION | MODEL/RESTRICTION | FROM-TO |
|---|---|---|---|---|---|
| CONT'D | | | | | |
| P502-17-204 | 1 | | | | 4C01- |
| 17-308 | | GEAR,COUNTER | | | |
| M510-17-308 | 1 | | | | |
| 17-309B | | NUT,LOCK-COUNTER SHAFT BR | | | |
| M501-17-309 | 1 | | | | |
| 17-310 | | GEAR,REVERSE IDLE | | | |
| M513-17-310 | 1 | | | | |
| 17-313 | | WASHER,THRUST-REVERSE IDLE G. | | | |
| M501-17-313 | 2 | T=2.0MM | | | |
| 17-315 | | SHAFT,REV. IDLE GEAR | | | |
| M501-17-140 | 1 | | | | |
| 17-316D | | SPACER | | | |
| R502-17-316 | 1 | | | | -5501 |
| 17-327 | | SHIM,ADJUST-COUNTER SHAFT GEAR | | | |
| 0305-17-327 | 2 | T=0.1MM | | | |
| 0305-17-328 | 1 | T=0.3MM | | | |
| 17-341A | | GEAR,SPEEDO.DRIVE | | | |
| M503-17-341 | 1 | | | | |
| 17-611 | | GEAR,OVER TOP | | | |
| M517-17-611 | 1 | | | | |
| 17-620 | | HUB SET,CLUTCH-O.T. & REV | | | |
| M505-17-620 | 1 | | | | |
| 17-621 | | HUB,CLUTCH | | | |
| M505-17-621 | 1 | | | | |
| 17-629 | | NUT,LOCK-CLUTCH HUB | | | |
| 8601-17-629 | 1 | | | | |

4C01 NA35* -609691
5501 NA35* -620210

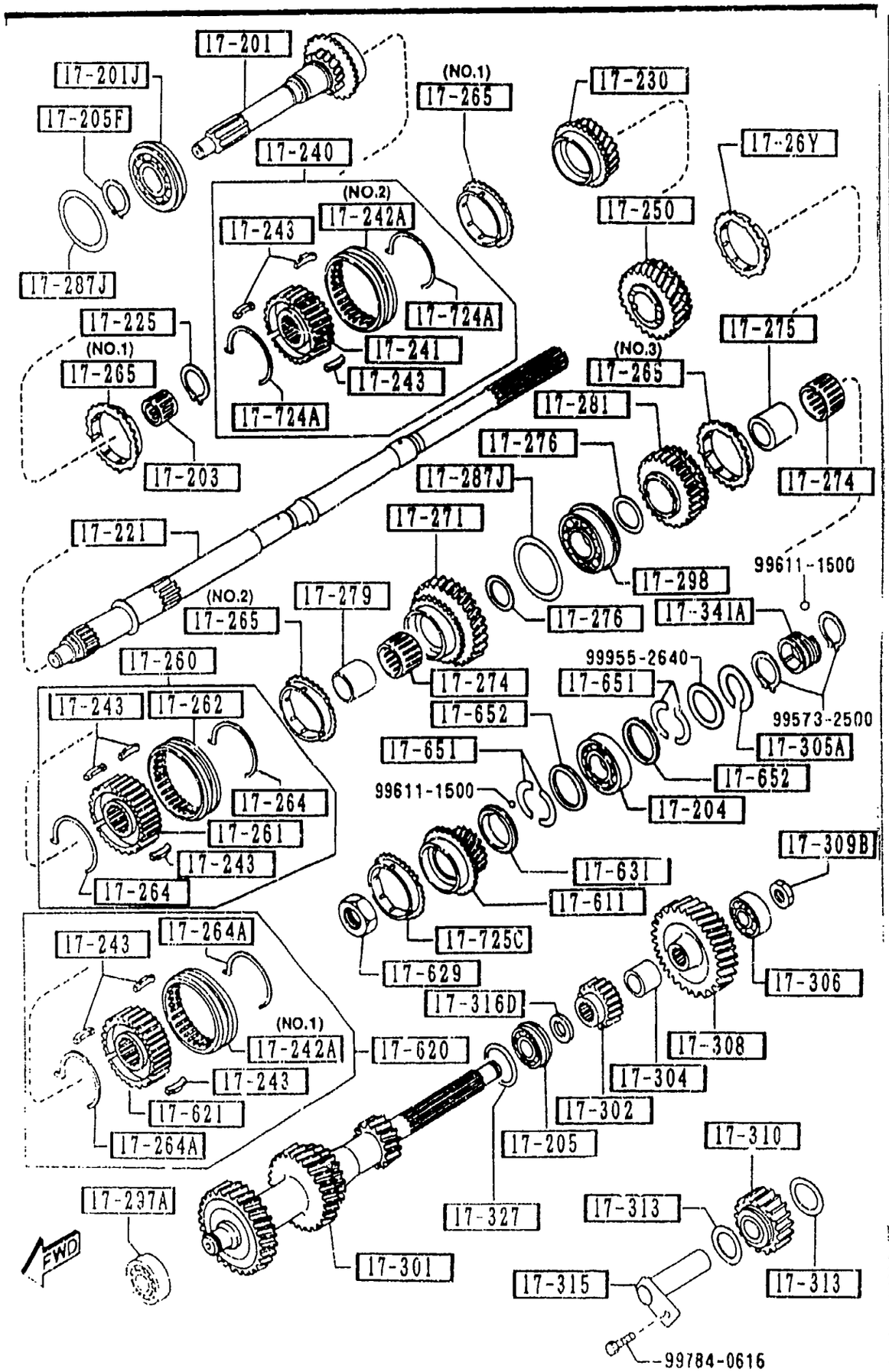






| PART NO. | QTY | MODEL/RESTRICTION | MODEL/RESTRICTION | MODEL/RESTRICTION | FROM-TO |
|---|---|---|---|---|---|
| 17-631 | | WASHER,THRUST LOCK-OVER TOP G. | | | |
| 0884-17-632B | 1 | T=6.2MM | | | |
| 0884-17-633B | 1 | T=6.4MM | | | |
| 0884-17-634B | 1 | T=6.5MM | | | |
| 0884-17-635B | 1 | T=6.6MM | | | |
| 17-651 | | WASHER,THRUST | | | |
| M501-17-651 | 4 | T=3 0MM | | | |
| M501-17-653 | 2 | T=3.1MM | | | |
| M501-17-654 | 2 | T=3.2MM | | | |
| M501-17-655 | 2 | T=2.9MM | | | |
| 17-652 | | RING,THRUST WASHER | | | |
| M501-17-652 | 2 | T=2.0MM | | | |
| 17-724A | | SPRING,SYNCHRO.KEY | | | |
| W501-17-724 | 2 | | | | |
| 17-725C | | RING,SYNCHRONIZER | | | |
| V501-17-725 | 1 | | | | |

1720 -1 MANUAL TRANSMISSION CHANGE CONTROL SYSTEM

NOTE
①…④⇨ 17-481S
THE D-CODE OF 17-481S CONSISTS OF FIGURE NUMBERS ① THROUGH ④.

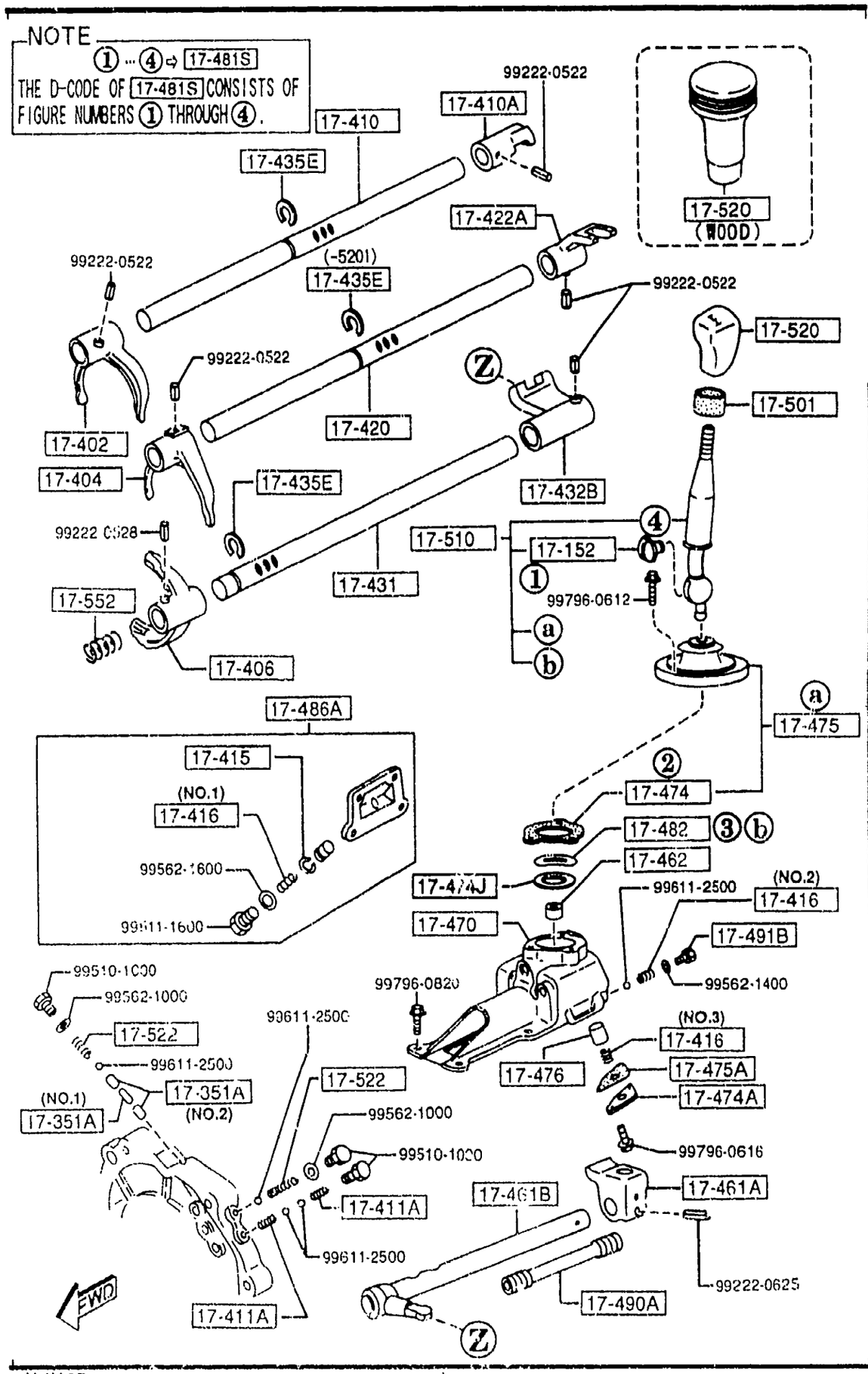


| PART NO. | QTY | MODEL/RESTRICTION | MODEL/RESTRICTION | MODEL/RESTRICTION | FROM-TO |
|---|---|---|---|---|---|
| 17-152 | | BUSH | | | |
| M501-17-515 | 1 | | | | |
| 17-351A | | PIN,INTER LOCK | | | |
| R501-17-351 | 1 | (ILLUST. NO.1) | | | |
| 0114-17-351 | 2 | (ILLUST. NO.2) | | | |
| 17-402 | | FORK,SHIFT (1ST & 2ND) | | | |
| M503-17-402 | 1 | | | | |
| 17-404 | | FORK,SHIFT (3RD & 4TH) | | | |
| M501-17-404B | 1 | | | | |
| 17-406 | | FORK,SHIFT | | | |
| M504-17-406A | 1 | | | | |
| 17-410 | | ROD,SHIFT(1ST&2ND) | | | |
| M503-17-411 | 1 | | | | |
| 17-410A | | END,S/ROD(1ST&2ND) | | | |
| M507-17-412A (M507-17-412A) | 1 | | | | -5201 |
| M507-17-412A | 1 | | | | 5201- |
| 17-411A | | SPRING,SHIFT ROD-REVERSE | | | |
| 0014-17-411 | 2 | | | | |
| 17-415 | | RING,RETAINING-SHIFT ROD END | | | |
| 3648-17-415 | 1 | | | | |
| 17-416 | | SPRING,SHIFT ROD END | | | |
| M501-17-416 | 1 | (ILLUST. NO.1) | | | |
| M504-17-416 | 1 | (ILLUST. NO.2) | | | |
| M505-17-416 | 1 | (ILLUST. NO.3) | | | |
| 17-420 | | ROD,SHIFT(3RD&4TH) | | | |
| M504-17-421A (M504-17-421A) | 1 | | | | -5201 |
| M504-17-421A | 1 | | | | 5201- |

5201 NA35* -614193

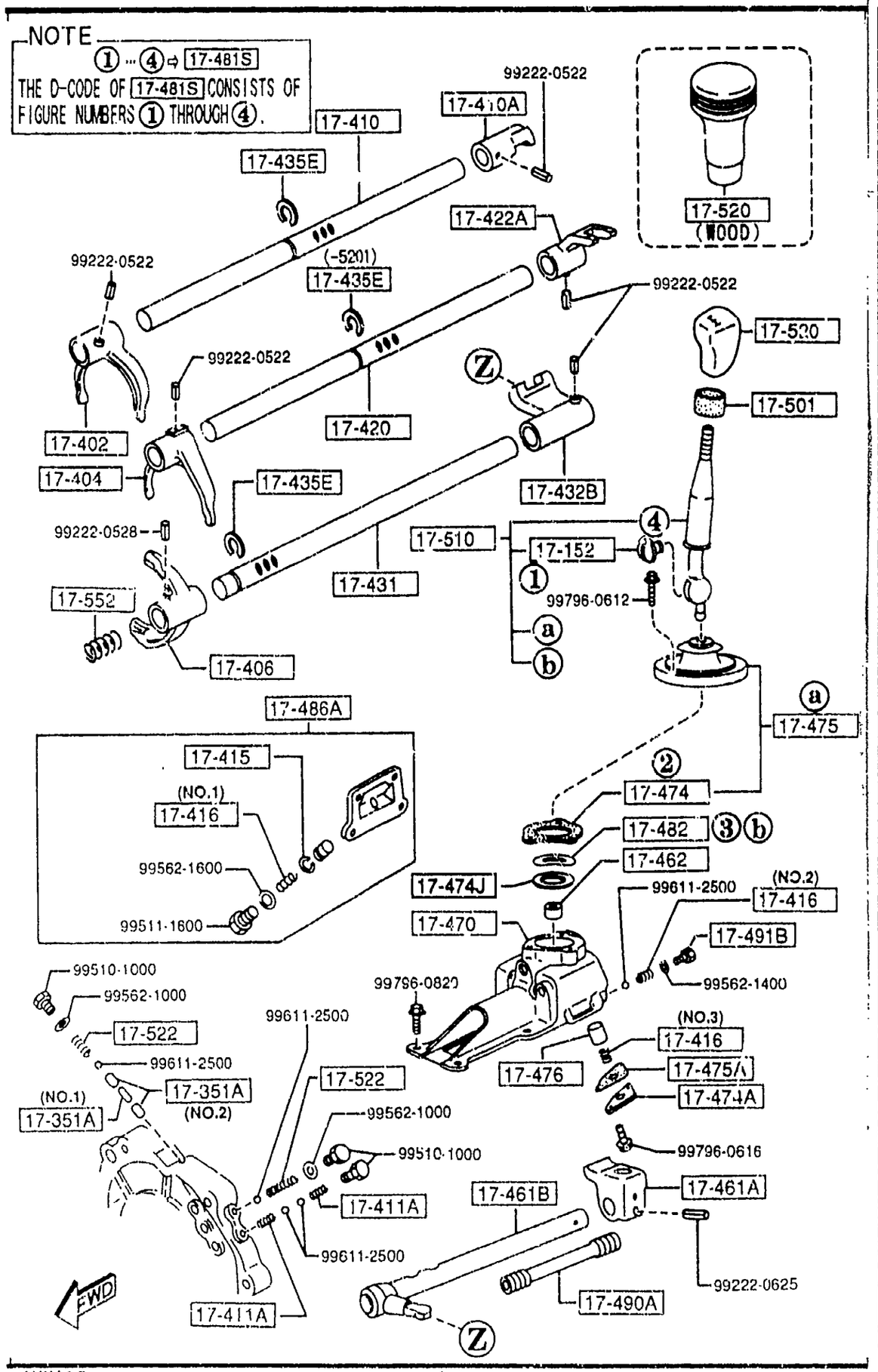






| PART NO. | QTY | MODEL/RESTRICTION | MODEL/RESTRICTION | MODEL/RESTRICTION | FROM-TO |
|---|---|---|---|---|---|
| 17-422A | | END,S/ROD(3RD&4TH) | | | |
| M507-17-422 A (M507-17-422A) | 1 | | | | -5201 |
| M507-17-422A | 1 | | | | 5201- |
| 17-431 | | ROD,SHIFT-OVER TOP & REVERSE | | | |
| M506-17-431A | 1 | | | | |
| 17-432B | | END,SHIFT ROD(O/TOP& REV.) | | | |
| M508-17-432 | 1 | | | | |
| 17-435E | | RING,RETAINING | | | |
| R502-17-435 | 3 | | | | -5201 |
| R502-17-435 | 2 | | | | 5201- |
| 17-461A | | END,CONTROL LEVER | | | |
| M508-17-461A | 1 | | | | |
| 17-461B | | ROD,CONTROL | | | |
| M516-17-450A | 1 | | | | |
| 17-462 | | SHEET,SPRING | | | |
| 0390-17-462A | 1 | | | | |
| 17-470 | | CASE,CHANGE CONTROL | | | |
| M510-17-470C | 1 | | | | |
| 17-474 | | GASKET,COVER PLATE | | | |
| 0303-17-474 | 1 | | | | |
| 17-474A | | CAP,SPRING | | | |
| M501-17-474 | 1 | | | | |
| 17-474J | | SHIM,ADJUST | | | |
| 99963-3330 | 1 | T=0.3MM ('95 MODEL) | | | |
| 17-475 | | BOOT,DUST-CHANGE LEVER | | | |
| M513-17-480A | 1 | | | | |
| 17-475A | | GASKET,SPRING CAP | | | |

5201 NA35* -614193

NOTE
① ··· ④ ⇨ 17-481S
THE D-CODE OF 17-481S CONSISTS OF FIGURE NUMBERS ① THROUGH ④.

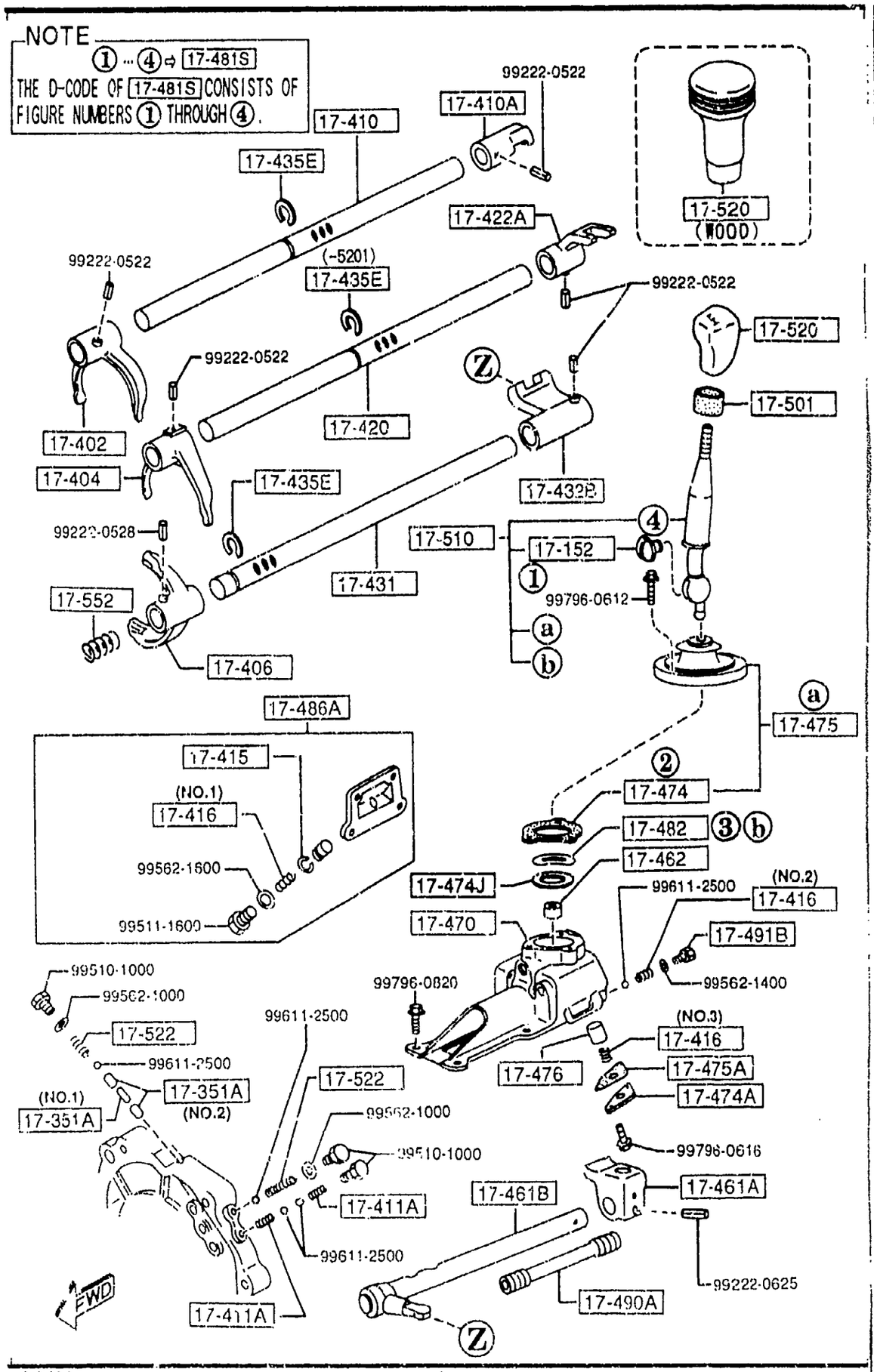


| PART NO. | QTY | MODEL/RESTRICTION | MODEL/RESTRICTION | MODEL/RESTRICTION | FROM-TO |
|---|---|---|---|---|---|
| CONT'D | | | | | |
| M5[illegible]J-17-475 | 1 | | | | |
| 17-476 | | SPINDLE,SELECT LOCK | | | |
| M502-17-476A | 1 | | | | |
| 17-481S | | BUSH SET,CHANGE LEVE R | | | |
| 8AN1[illegible]-481 | 1 | | | | |
| 17-482 | | WASHER,WAVE-CHANGE C ONT.CASE | | | |
| M505-17-482 | 1 | | | | |
| 17-486A | | COVER,BLIND | | | |
| R501-17-47X | 1 | | | | |
| 17-490A | | COVER,ROD | | | |
| M504-17-490A | 1 | | | | |
| 17-491B | | CAP,SPRING | | | |
| 0183-17-491 | 1 | | | | |
| 17-501 | | INSULATOR,CHG LEVER | | | |
| M501-17-501 | 1 | | | | |
| 17-510 | | LEVER,CHANGE | | | |
| M524-17-510C | 1 | | | | |
| 17-520 | | KNOB,CHANGE LEVER | | | |
| M515-17-520 | 1 | (URETHANE) | | | |
| 00 | INT- | NA3 NA4 NA5 NA6 NA7 NA8 BLACK | | | |
| M517-17-520 | 1 | (WOOD) | | | |
| M518-17-520A | 1 | (LEATHER) | | | |
| 17-522 | | SPRING | | | |
| 0103-17-411 | 2 | | | | |
| 17-552 | | SPRING | | | |
| M505-17-552 | 1 | | | | |

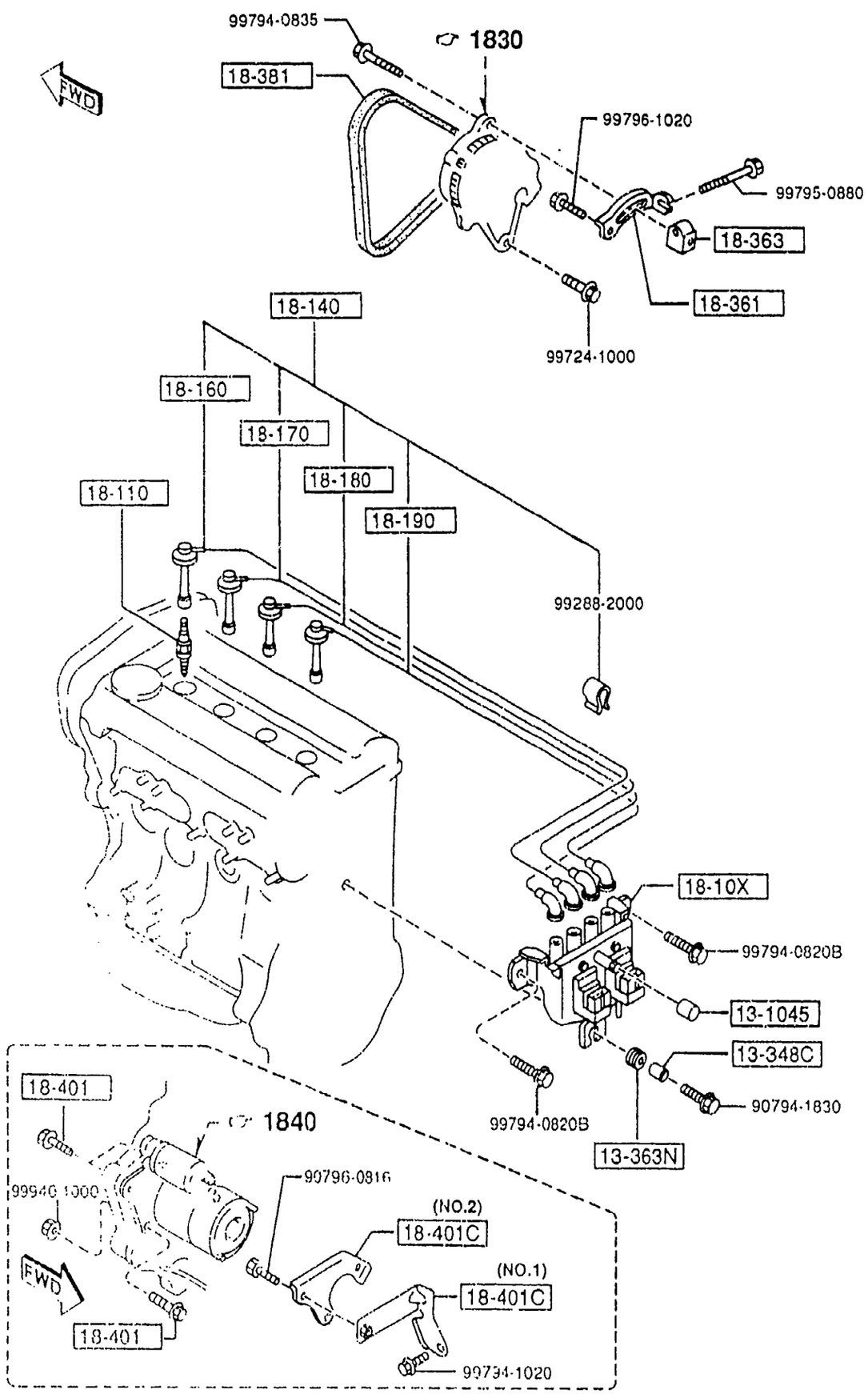






| PART NO. | QTY | MODEL/RESTRICTION | MODEL/RESTRICTION | MODEL/RESTRICTION | FROM-TO |
|---|---|---|---|---|---|
| 13-1045 | | CAP,BLAND | | | |
| JE08-13-104 | 1 | | | | -5403 |
| 13-348C | | SPACER | | | |
| B61P-13-348 | 1 | | | | |
| 13-363N | | RUBBER,MOUNTING | | | |
| B61P-13-363A | 1 | | | | |
| 18-10X | | COIL & IGNITER | | | |
| BPE8-18-10XA | 1 | | | | -5403 |
| BPE8-18-10XB | 1 | | | | 5403- |
| 18-110 | | PLUG,SPARK | | | |
| BP01-18-110 | 4 | BKR5E-11 NGK (STD.) | | | |
| BP02-18-110 | 4 | K16PR-U11 ND (STD.) | | | |
| BP03-18-110 | 4 | BKR6E-11 NGK (OPTION COLD TYPE) | | | |
| BP04-18-110 | 4 | K20PR-U11 ND (OPTION COLD TYPE) | | | |
| 18-140 | | CORD SET,HI.TENSION | | | |
| BPE8-18-140A | 1 | | | | |
| 18-160 | | CORD NO.1,HI.TENSION | | | |
| BPE8-18-T51 | 1 | | | | |
| 18-170 | | CORD NO.2,HI.TENSION | | | |
| BPE8-18-T52 | 1 | | | | |
| 18-180 | | CORD NO.3,HI.TENSION | | | |
| BPE8-18-T53 | 1 | | | | |
| 18-190 | | CORD NO.4,HI.TENSION | | | |
| BPE8-18-T54A | 1 | | | | |
| 18-361 | | STRAP,ALTERNATOR | | | |
| B6BF-18-361C | 1 | | | | |

5403 NA35* -619601

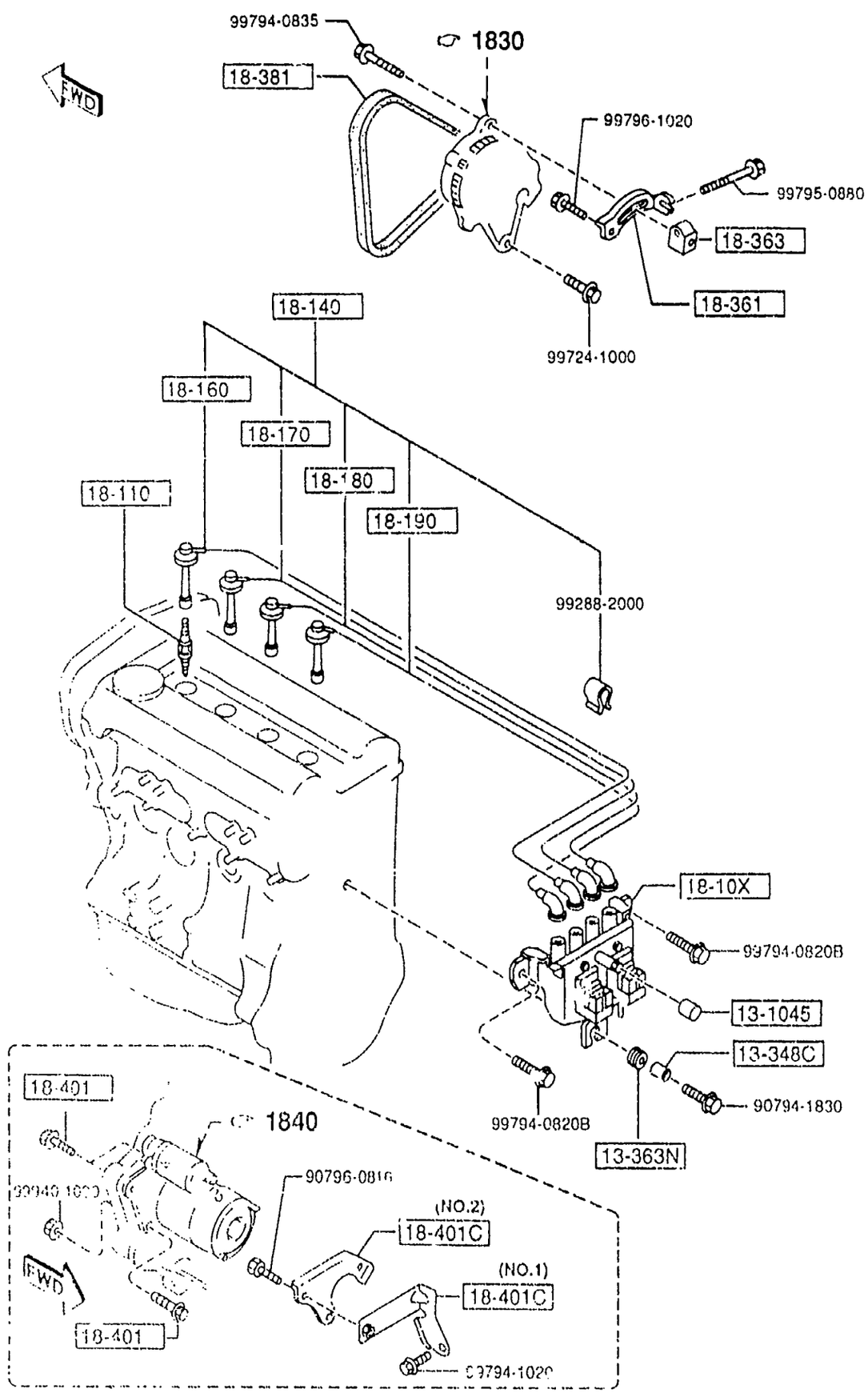






| PART NO. | QTY | MODEL/RESTRICTION | MODEL/RESTRICTION | MODEL/RESTRICTION | FROM-TO |
|---|---|---|---|---|---|
| +----------+ \| 18-363 \| +----------+ | | SPACER,STRAP | | | |
| FP01-18-363 | 1 | | | | |
| +----------+ \| 18-381 \| +----------+ | | BELT'V' | | | |
| B596-18-381 | 1 | 4PK L=885 GOOD YEAR | | | |
| B6BF-18-381 | 1 | 4PK L=885 BANDO | | | |
| +----------+ \| 18-401 \| +----------+ | | BOLT,STARTER | | | |
| B6BG-18-401 A (B6BG-18-401A) | 3 | | | | -5C01 |
| *B6BG-18-401A | 3 | | | | 5C01- |
| +----------+ \| 18-401C \| +----------+ | | BRACKET,STARTER | | | |
| BPE8-18-410 | 1 | (ILLUST. NO.1) (MT) | | | |
| B660-18-411C | 1 | (ILLUST. NO.2) (MT) | | | |

5C01 NA3** -706448

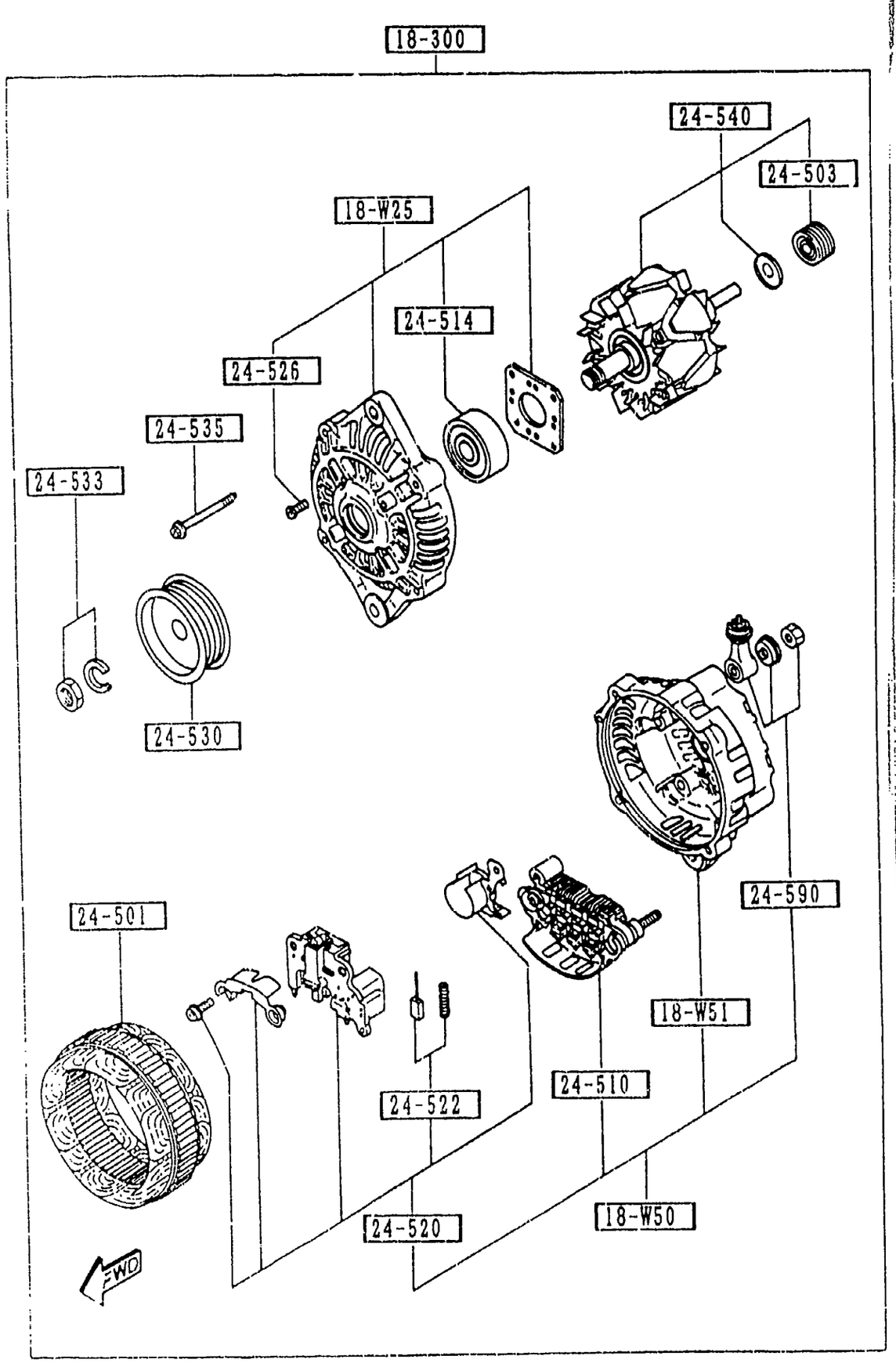


## 1830 -1 ALTERNATOR

| PART NO. | QTY | MODEL/RESTRICTION | MODEL/RESTRICTION | MODEL/RESTRICTION | FROM-TO |
|---|---|---|---|---|---|
| 18-W25 | | COVER,FRONT-ALTERNATOR | | | |
| FS05-18-W25 | 1 | | | | |
| 18-W50 | | COVER,REAR-ALTERNATOR | | | |
| BPE8-18-W50 | 1 | | | | |
| 18-W51 | | COVER,REAR-ALTERNATOR (G) | | | |
| FS05-18-W51 | 1 | | | | |
| 18-300 | | ALTERNATOR | | | |
| BPE8-18-300 | 1 | (MT) | | | |
| BPE9-18-300 | 1 | (AT) | | | |
| 24-501 | | STATOR | | | |
| JE15-18-W45 | 1 | | | | |
| 24-503 | | BEARING,BALL-ALT. REAR | | | |
| N336-18-W36 | 1 | | | | |
| 24-510 | | RECTIFIER | | | |
| BPE8-18-W60 | 1 | | | | |
| 24-514 | | BEARING,BALL-ALT. FRONT | | | |
| PN16-18-W27 | 1 | | | | |
| 24-520 | | REGULATOR,VOLTAGE | | | |
| B64J-18-W70A | 1 | | | | |
| 24-522 | | BRUSH | | | |
| B3C7-18-W77 | 2 | | | | |
| 24-526 | | SCREW SET | | | |
| RF71-18-W26 | 1 | | | | |
| 24-530 | | PULLEY | | | |
| B3C7-18-W10 | 1 | | | | |
| 24-533 | | NUT SET | | | |
| B3C7-18-W05 | 1 | | | | |

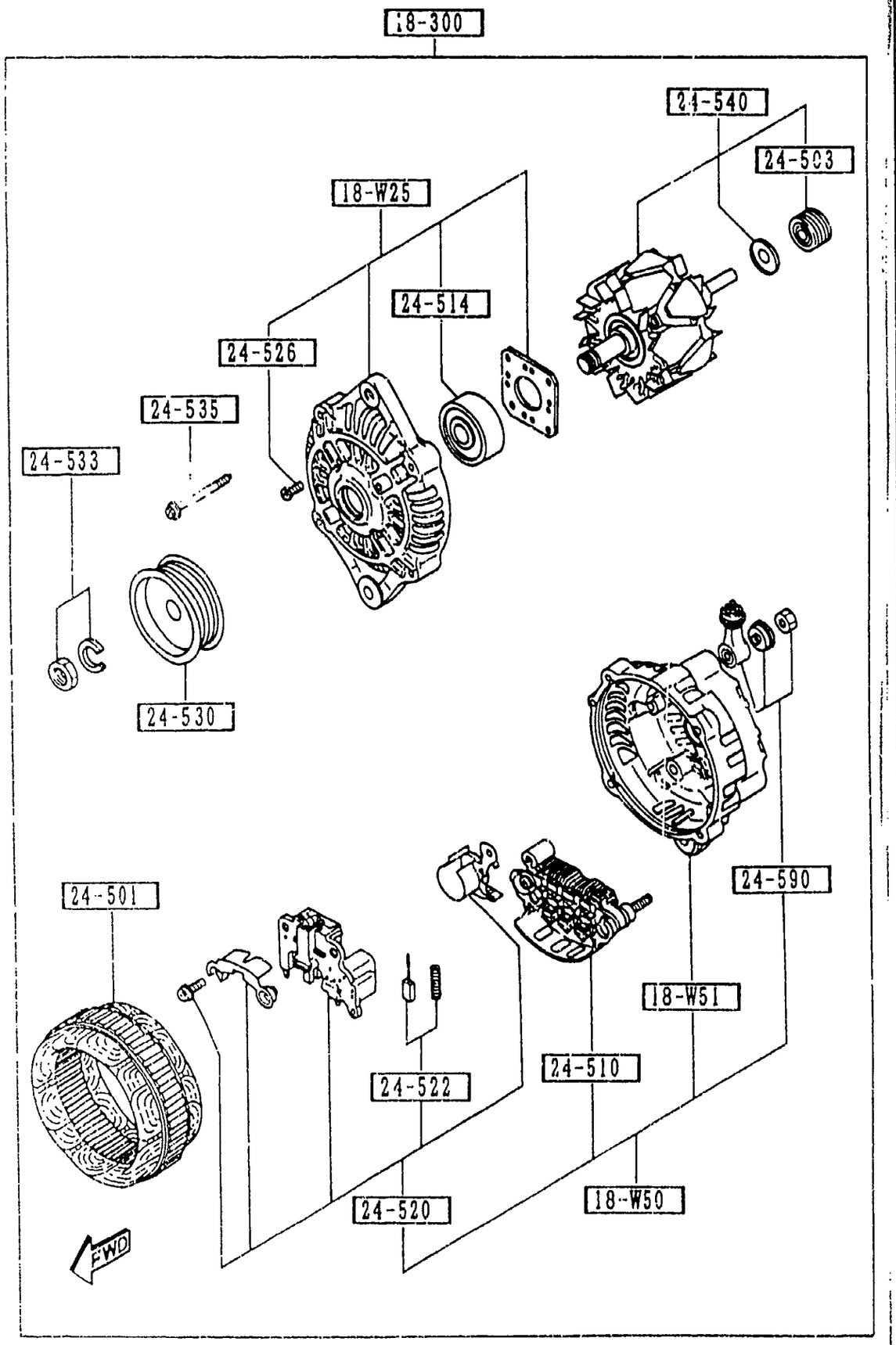


## 1830 -2 * ALTERNATOR

| PART NO. | QTY | MODEL/RESTRICTION | MODEL/RESTRICTION | MODEL/RESTRICTION | FROM-TO |
|---|---|---|---|---|---|
| 24-535 | | SCREW SET | | | |
| RF71-18-W20 | 1 | | | | |
| 24-540 | | ROTOR | | | |
| B366-18-W35D | 1 | (MT) | | | |
| BPD3-18-W35 | 1 | (AT) | | | -4912 |
| F285-18-W35A | 1 | (AT) | | | 4912- |
| 24-590 | | TERMINAL SET | | | |
| BPD3-18-W80 | 1 | | | | |

4912 NA35* -602970

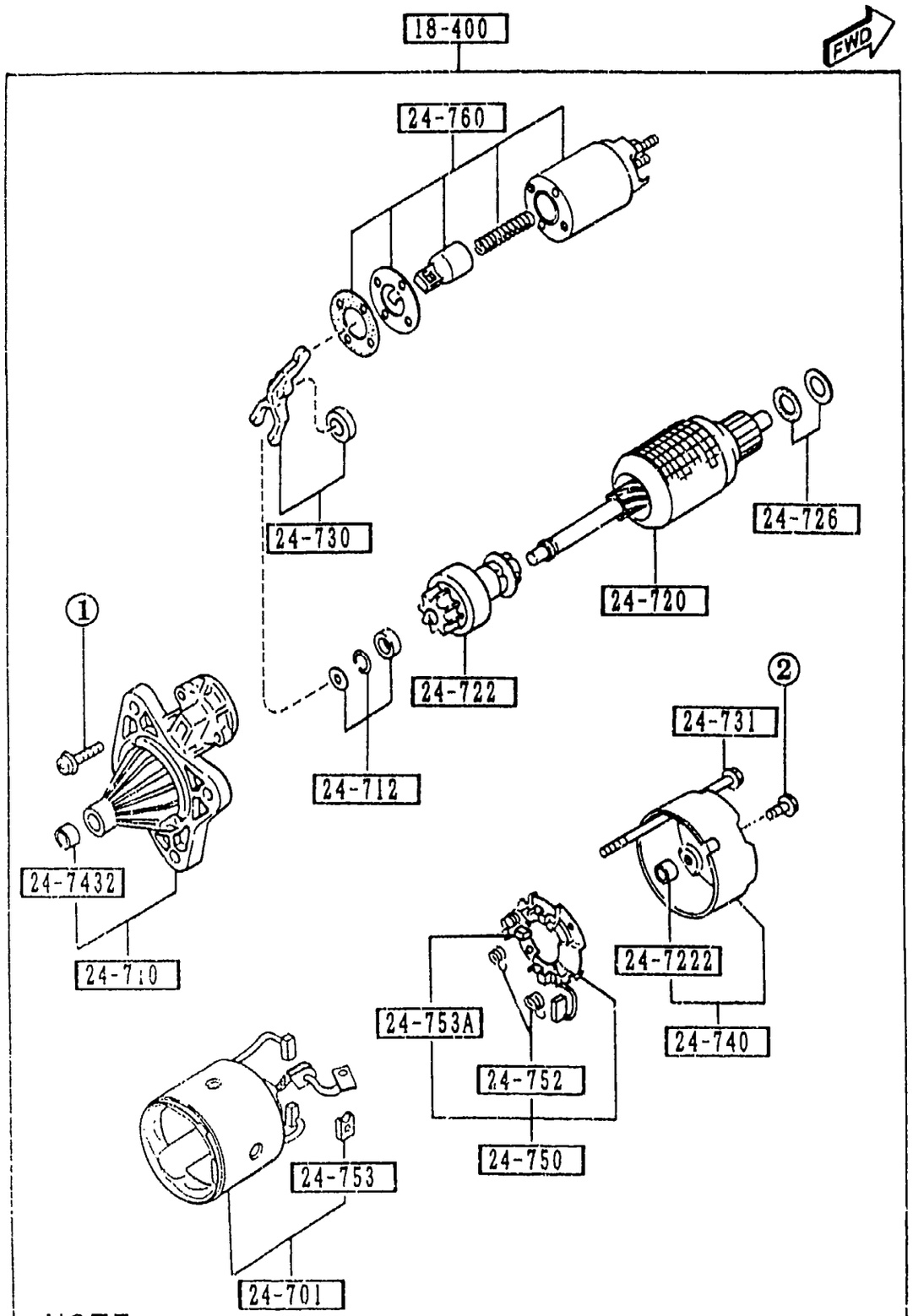


NOTE

①…②⇨ 24-725

THE D-CODE OF 24-725 CONSISTS OF FIGURE NUMBERS ① THROUGH ②.



| PART NO. | QTY | MODEL/RESTRICTION | MODEL/RESTRICTION | MODEL/RESTRICTION | FROM-TO |
|---|---|---|---|---|---|
| 18-400 | | STARTER | | | |
| B61R-18-400A | 1 | NON ASBESTOS | | | |
| 24-701 | | YOKE | | | |
| B61R-18-X65 | 1 | | | | |
| 24-710 | | BRACKET,FRONT | | | |
| B61R-18-X00 | 1 | | | | |
| 24-712 | | STOPPER SET | | | |
| E356-18-X30 | 1 | | | | |
| 24-720 | | ARMATURE | | | |
| B658-18-X60 | 1 | NON ASBESTOS | | | |
| 24-722 | | CLUTCH,OVER RUNNING | | | |
| B630-18-X45 | 1 | | | | |
| 24-7222 | | SLEEVE,BEARING-REAR | | | |
| E356-18-X81 | 1 | | | | |
| 24-725 | | SCREW SET | | | |
| E356-18-X95 | 1 | MITSUBISHI | | | |
| 24-726 | | WASHER SET | | | |
| E356-18-X92 | 1 | | | | |
| 24-730 | | LEVER | | | |
| E356-18-X05 | 1 | | | | |
| 24-731 | | BOLT SET | | | |
| B630-18-X90 | 2 | | | | |
| 24-740 | | BRACKET,REAR | | | |
| E356-18-X80 | 1 | | | | |
| 24-7432 | | SLEEVE,BEARING-FRONT | | | |
| F210-18-X01 | 1 | | | | |

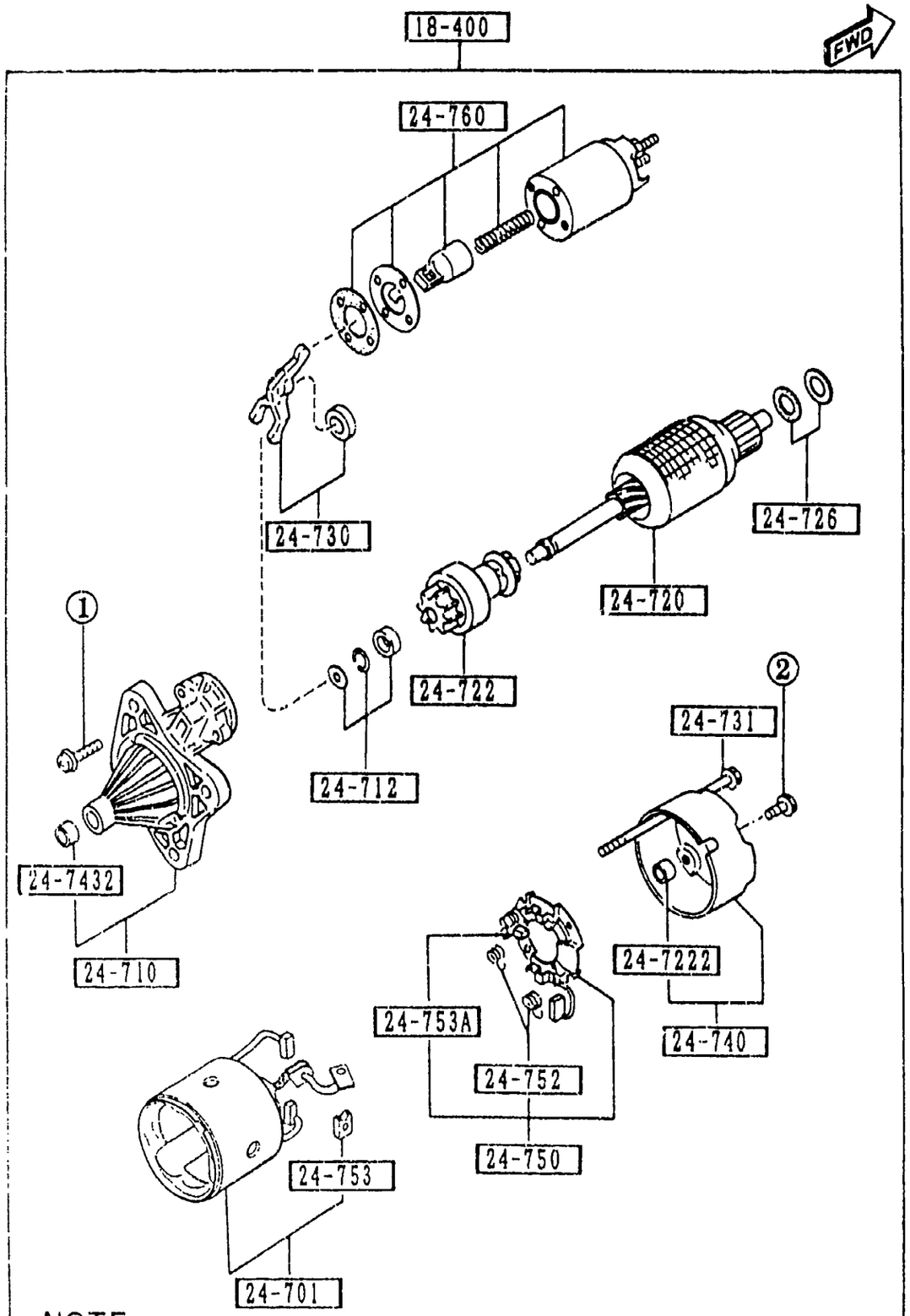


NOTE

① … ② ⇨ 24-725

THE D-CODE OF 24-725 CONSISTS OF FIGURE NUMBERS ① THROUGH ②.



| PART NO. | QTY | MODEL/RESTRICTION | MODEL/RESTRICTION | MODEL/RESTRICTION | FROM-TO |
|---|---|---|---|---|---|
| 24-750<br>B61R-18-X70 | 1 | HOLDER,BRUSH | | | |
| 24-752<br>0222-24-752A | 4 | SPRING,BRUSH | | | |
| 24-753<br>B630-18-X66 | 2 | BRUSH,YOKE | | | |
| 24-753A<br>B660-18-X66 | 2 | BRUSH | | | |
| 24-760<br>E356-18-X10 | 1 | SWITCH | | | |

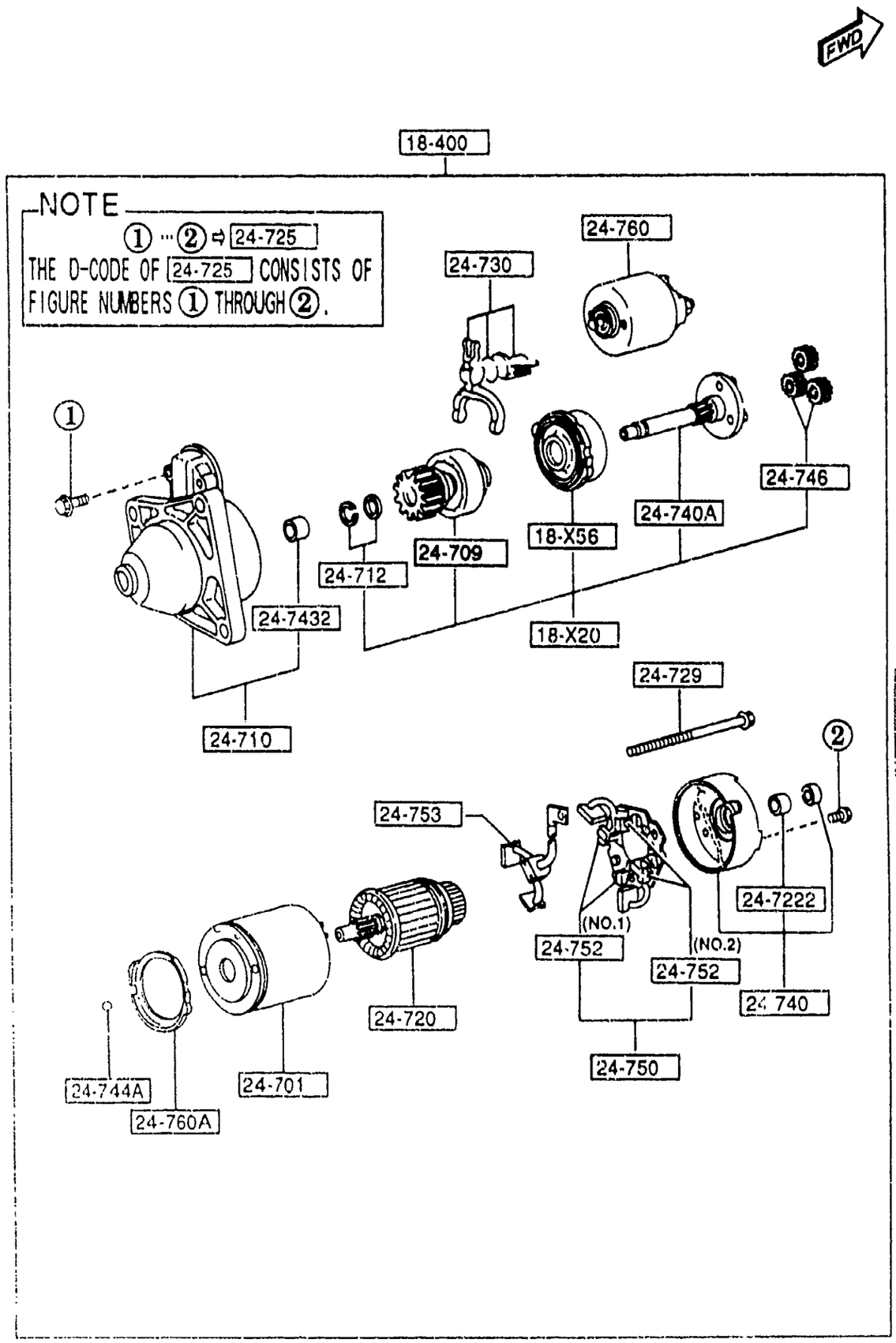




| PART NO. | QTY | MODEL/RESTRICTION | MODEL/RESTRICTION | MODEL/RESTRICTION | FROM-TO |
|---|---|---|---|---|---|
| 18-X20 | | SHAFT,PINION | | | |
| AM15-18-X20 | 1 | | | | |
| 18-X56 | | GEAR,INTERNAL-STARTER | | | |
| F225-18-X56 | 1 | | | | |
| 18-400 | | STARTER | | | |
| BPE9-18-400 | 1 | | | | |
| 24-701 | | YOKE | | | |
| JF01-18-X65 | 1 | | | | |
| 24-709 | | PINION | | | |
| *AM15-18-X25 | 1 | | | | |
| 24-710 | | BRACKET,FRONT | | | |
| BPE9-18-X00 | 1 | | | | |
| 24-712 | | STOPPER SET | | | |
| N326-18-X30 | 1 | MITSUBISHI | | | |
| 24-720 | | ARMATURE | | | |
| F214-18-X60A | | NON ASBESTOS | | | -5C01 |
| AN(AM15-18-X60 ) | 1 | | | | |
| AM15-18-X60 | 1 | | | | 5C01- |
| 24-7222 | | SLEEVE,BEARING-REAR | | | |
| N326-18-X62A | 1 | MITSUBISHI | | | |
| 24-725 | | SCREW SET | | | |
| E356-18-X95 | 1 | MITSUBISHI | | | |
| 24-729 | | BOLT | | | |
| N326-18-X91 | 2 | | | | |
| 24-730 | | LEVER | | | |
| N326-18-X05 | 1 | | | | |
| 24-740 | | BRACKET,REAR | | | |

5C01 NA3** -706448

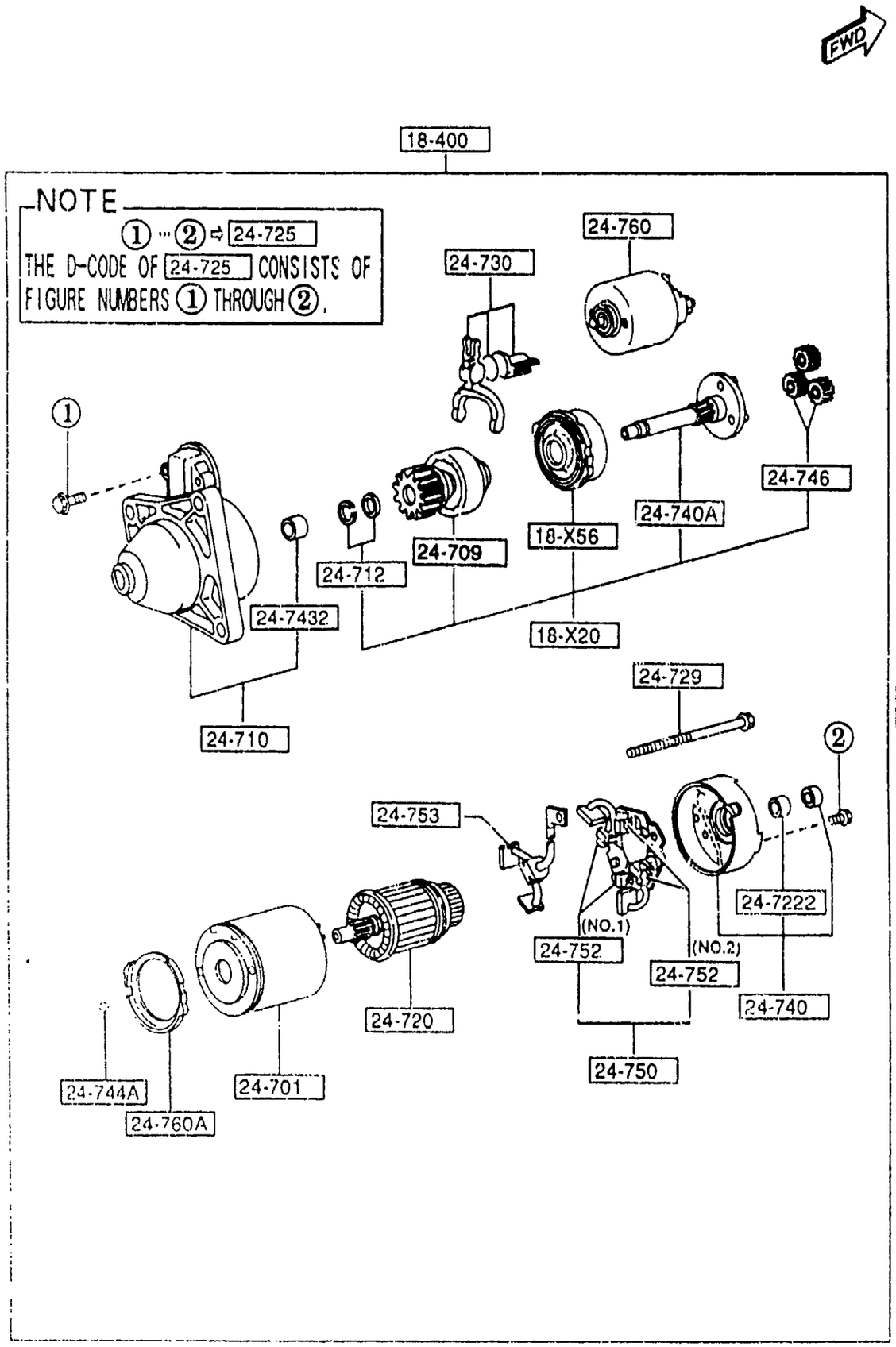




| PART NO. | QTY | MODEL/RESTRICTION | MODEL/RESTRICTION | MODEL/RESTRICTION | FROM-TO |
|---|---|---|---|---|---|
| CONT'D | | | | | |
| JF01-18-X80A | 1 | | | | |
| 24-740A | | SHAFT | | | |
| F214-18-X40 | 1 | | | | |
| 24-7432 | | SLEEVE,BEARING-FRONT | | | |
| E356-18-X01 | 1 | MITSUBISHI | | | |
| 24-744A | | BALL,STEEL | | | |
| N326-18-X93 | 1 | MITSUBISHI | | | |
| 24-746 | | GEAR | | | |
| N326-18-X57 | 3 | MITSUBISHI | | | |
| 24-750 | | HOLDER,BRUSH | | | |
| F214-18-X70 | 1 | | | | -6301 |
| *F2D4-18-X70 | 1 | | | | 6301- |
| 24-752 | | SPRING,BRUSH | | | |
| N318-18-X71 | 2 | (ILLUST. NO.1) | | | |
| N326-18-X71 | 2 | (ILLUST. NO.2) | | | |
| 24-753 | | BRUSH,YOKE | | | |
| F214-18-X66 | 1 | | | | -6301 |
| *F2D4-18-X66 | 1 | | | | 6301- |
| 24-760 | | SWITCH | | | |
| E356-18-X10 | 1 | | | | -5C01 |
| BPD4-18-X10 | 1 | | | | 5C01- |
| 24-760A | | GASKET | | | |
| N326-18-X87 | 1 | | | | |

5C01 NA3** -706448
6301 NA3** -714662

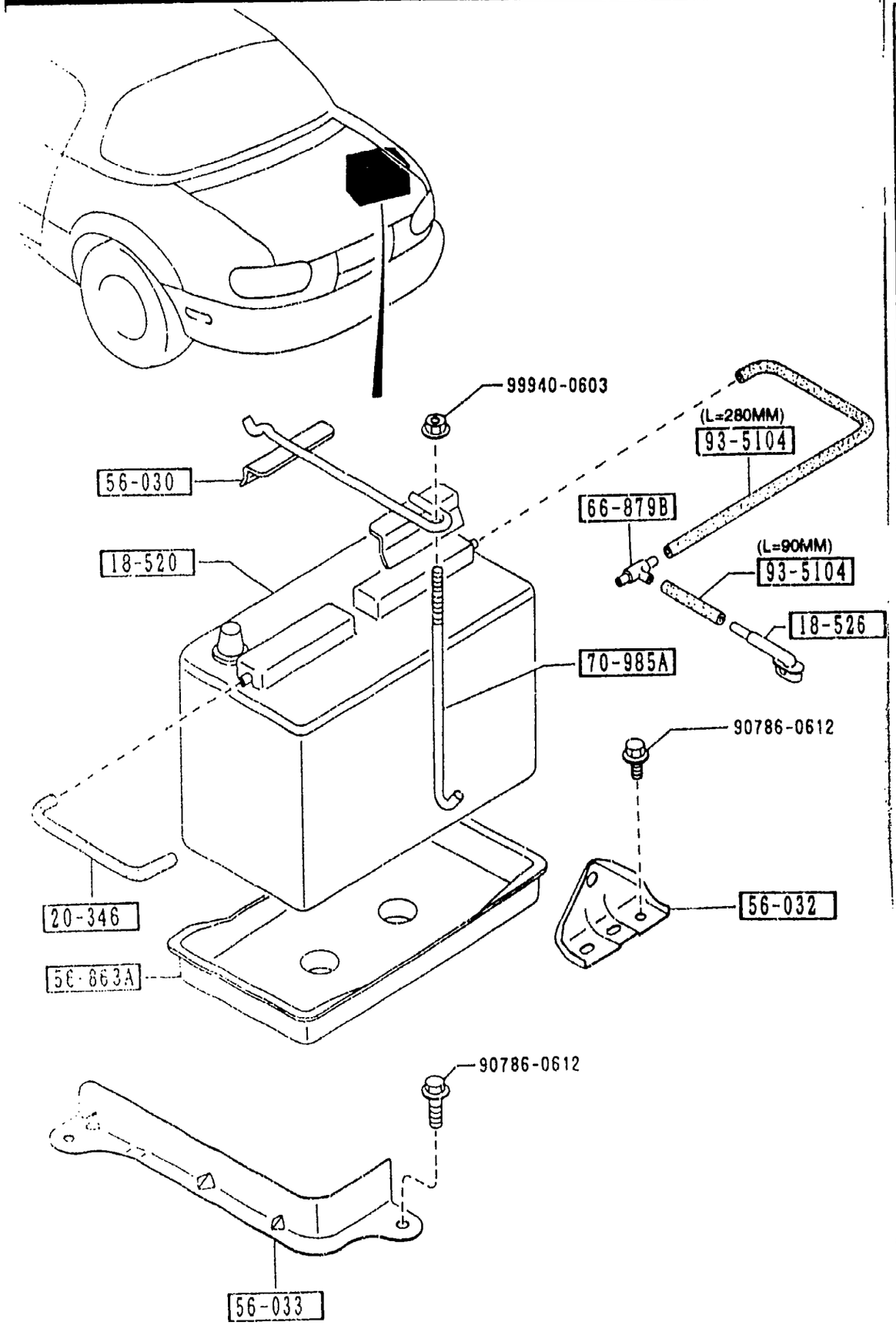




## 1850 -1 * BATTERY

| PART NO. | QTY | MODEL/RESTRICTION | MODEL/RESTRICTION | MODEL/RESTRICTION | FROM-TO |
|---|---|---|---|---|---|
| 18-520 | | BATTERY | | | |
| B6AC-18-520 | 1 | S46A24L(S) PANASONIC | | | |
| 18-526 | | CONNECTOR,TUBE-BATTERY | | | |
| B61P-18-526 | 1 | | | | |
| 20-346 | | TUBE,VACUUM | | | |
| B61P-18-524 | 1 | | | | |
| 56-030 | | CLAMP,BATTERY | | | |
| NA01-56-03XA | 1 | | | | |
| 56-032 | | BRACKET,BATTERY CLAMP | | | |
| NA01-56-032A | 1 | | | | -4B01 |
| AN(NA01-56-032B) | | | | | |
| NA01-56-032B | 1 | | | | 4B01- |
| 56-033 | | BRACKET,STOPPER-BATTERY | | | |
| NA01-56-033A | 1 | | | | -4B01 |
| AN(NA01-56-033B) | | | | | |
| NA01-56-033B | 1 | | | | 4B01- |
| 56-863A | | TRAY,BATTERY | | | |
| B095-56-032 | 1 | | | | |
| 66-879B | | JOINT | | | |
| 0813-66-879 | 1 | | | | |
| 70-985A | | BOLT,CLAMP | | | |
| 0259-54-292A | 1 | | | | |
| 93-5104 | | HOSE | | | |
| 99351-04999 | 1 | L=1M CUT IT TO USE | | | |

4B01 NA35* -606043

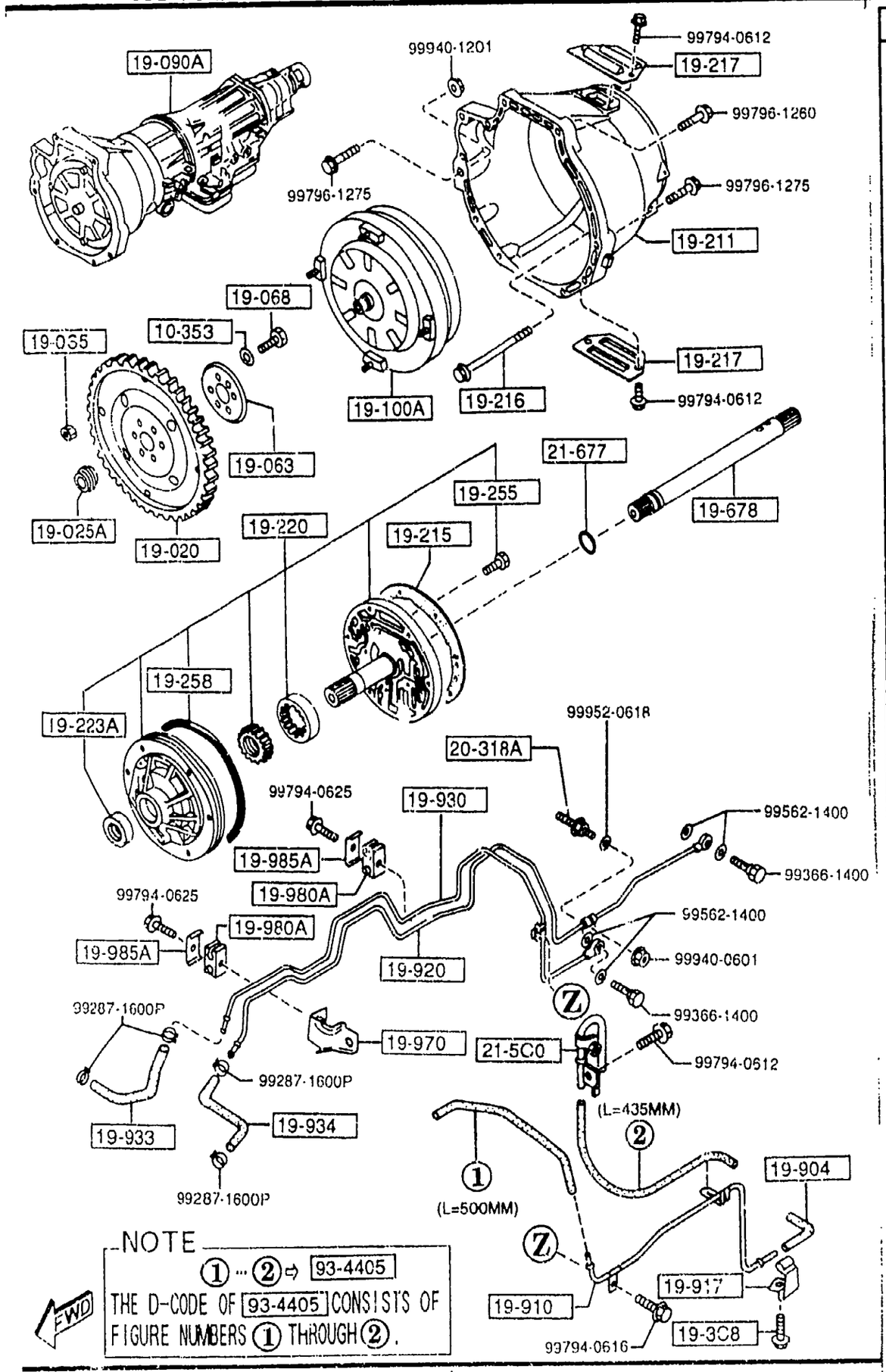




## 1910 -1 AUTOMATIC TRANSMISSION TORQUE CONVERTER, OIL PUMP & PIPINGS

| PART NO. | QTY | MODEL/RESTRICTION | MODEL/RESTRICTION | MODEL/RESTRICTION | FROM-TO |
|---|---|---|---|---|---|
| 10-353<br>0290-10-353 | 6 | WASHER,PLAIN | | | |
| 19-020<br>BU55-19-020 | 1 | PLATE,DRIVE | | | |
| 19-025A<br>FU60-19-025 | 1 | ADAPTER,DRIVE PLATE | | | |
| 19-063<br>FT31-19-063 | 1 | PLATE,BACKING | | | |
| 19-065<br>FU51-19-065 | 4 | NUT | | | |
| 19-068<br>FT31-19-064 | 6 | BOLT,LOCK | | | |
| 19-090A<br>N451-19-090C | 1 | T/MISSION CPT. | | | |
| 19-100A<br>BU55-19-100 | 1 | CONVERTER,TORQUE | | | |
| 19-211<br>BU55-19-211 | 1 | HOUSING,CONVERTER | | | |
| 19-215<br>BU46-19-215 | 1 | GASKET,OIL PUMP<br>NON ASBESTOS | | | |
| 19-216<br>BU01-19-216 | 6 | BOLT | | | |
| 19-217<br>BU55-19-217 | 2 | COVER,BLIND | | | |
| 19-220<br>N451-19-220 | 1 | PUMP,OIL | | | |
| 19-223A | | SEAL,OIL | | | |

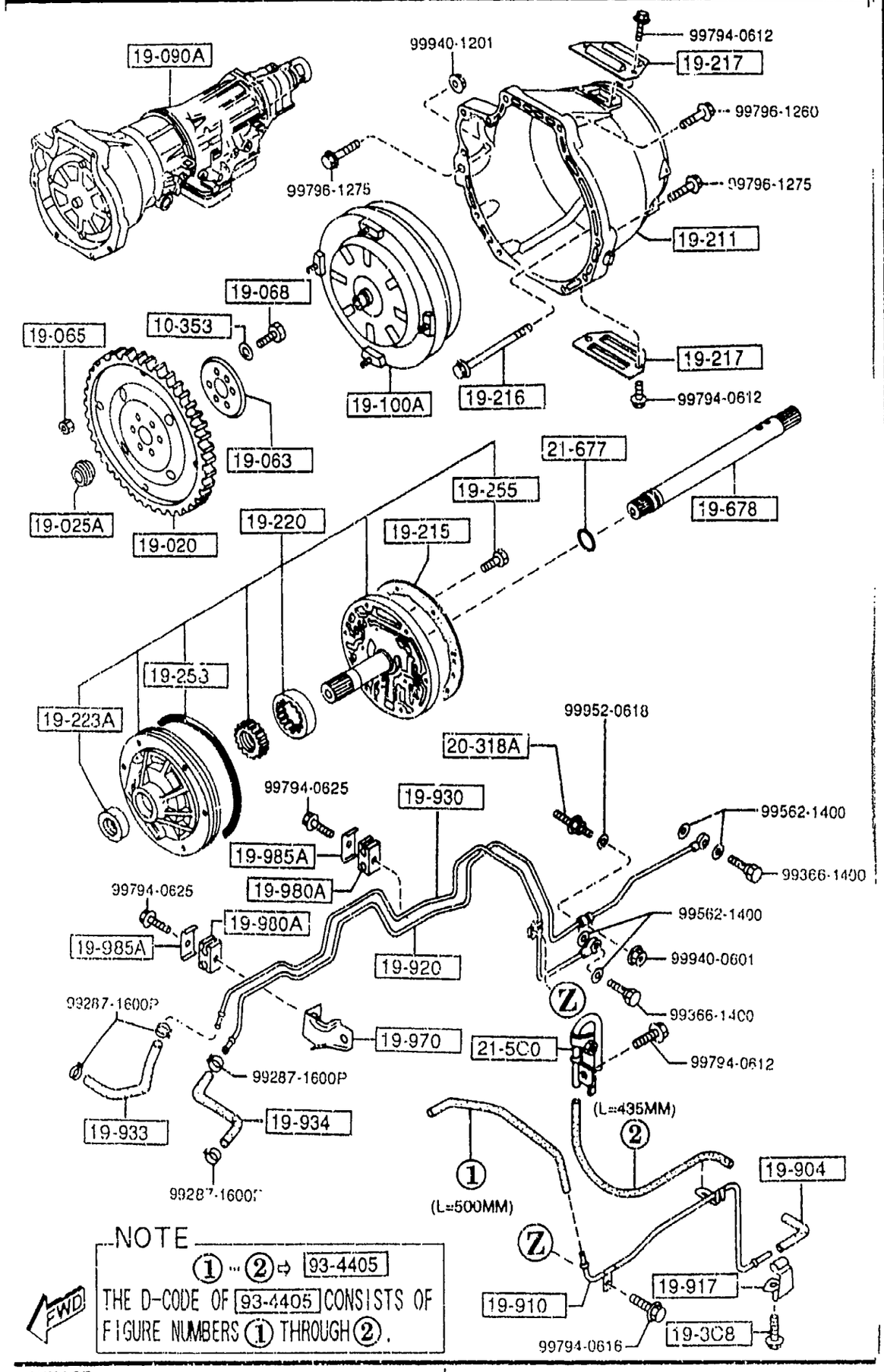


NOTE

① ··· ② ⇨ 93-4405

THE D-CODE OF 93-4405 CONSISTS OF FIGURE NUMBERS ① THROUGH ②.





| PART NO. | QTY | MODEL/RESTRICTION | MODEL/RESTRICTION | MODEL/RESTRICTION | FROM-TO |
|---|---|---|---|---|---|
| CONT'D | | | | | |
| 0338-19-223A | 1 | NOK | | | |
| 19-255 | | BOLT | | | |
| 0338-19-255 | 5 | | | | |
| 19-258 | | SEAL,CUT RING | | | |
| 0338-19-258 | 1 | | | | |
| 19-3C8 | | BOLT,BAFFLE PLATE | | | |
| BU55-19-3C8 | 1 | L=12MM | | | |
| 19-678 | | SHAFT,INPUT | | | |
| N451-21-678 | 1 | | | | |
| 19-904 | | HOSE,VACUUM | | | |
| 0338-19-904A | 1 | | | | |
| 19-910 | | PIPE,VACUUM | | | |
| BU55-19-910A | 1 | | | | |
| 19-917 | | CLIP | | | |
| 0436-19-917 | 1 | | | | |
| 19-920 | | PIPE,OIL | | | |
| N451-19-920 | 1 | | | | |
| 19-930 | | PIPE,OIL | | | |
| N452-19-930 | 1 | | | | |
| 19-933 | | HOSE,OIL | | | |
| BU55-19-933A | 1 | | | | |
| 19-934 | | HOSE,OIL | | | |
| BU55-19-934A | 1 | | | | |
| 19-970 | | BRACKET | | | |
| BU55-19-970A | 1 | | | | |
| 19-980A | | SUPPORT,OIL PIPE | | | |
| BU29-19-980 | 2 | | | | |

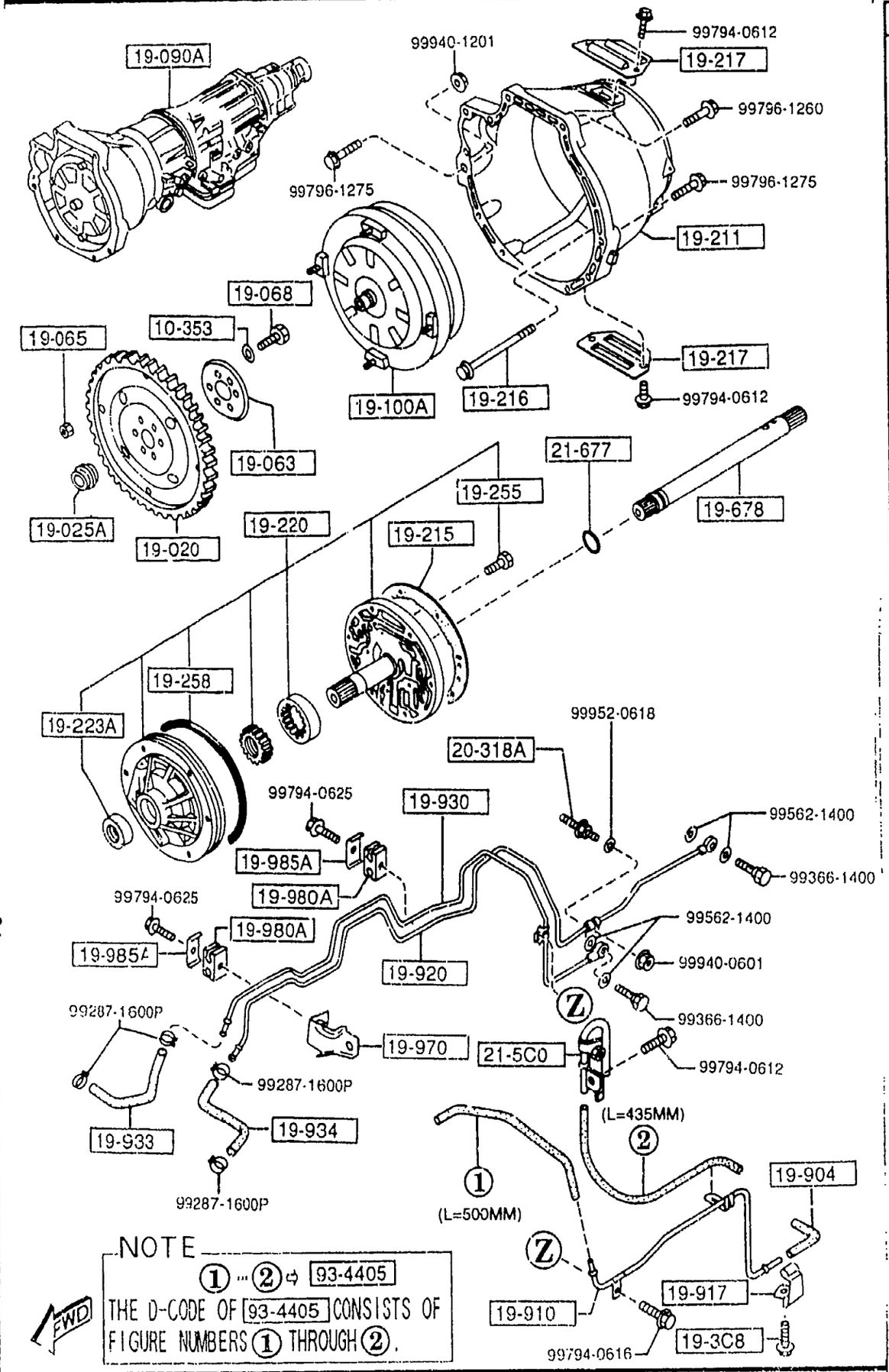


## 1910 -3 * AUTOMATIC TRANSMISSION TORQUE CONVERTER, OIL PUMP & PIPINGS

| PART NO. | QTY | MODEL/RESTRICTION | MODEL/RESTRICTION | MODEL/RESTRICTION | FROM-TO |
|---|---|---|---|---|---|
| 19-985A | | CLIP,OIL PIPE | | | |
| BU29-19-985 | 2 | | | | |
| 20-318A | | BOLT | | | |
| BU27-19-838 | 1 | | | | |
| 21-5C0 | | BREATHER | | | |
| N451-21-5C0 | 1 | | | | |
| 21-677 | | RING,'O' | | | |
| BU01-21-677 | 1 | | | | |
| 93-4405 | | HOSE | | | |
| 99344-05150 | 1 | L=15M CUT IT TO USE | | | |

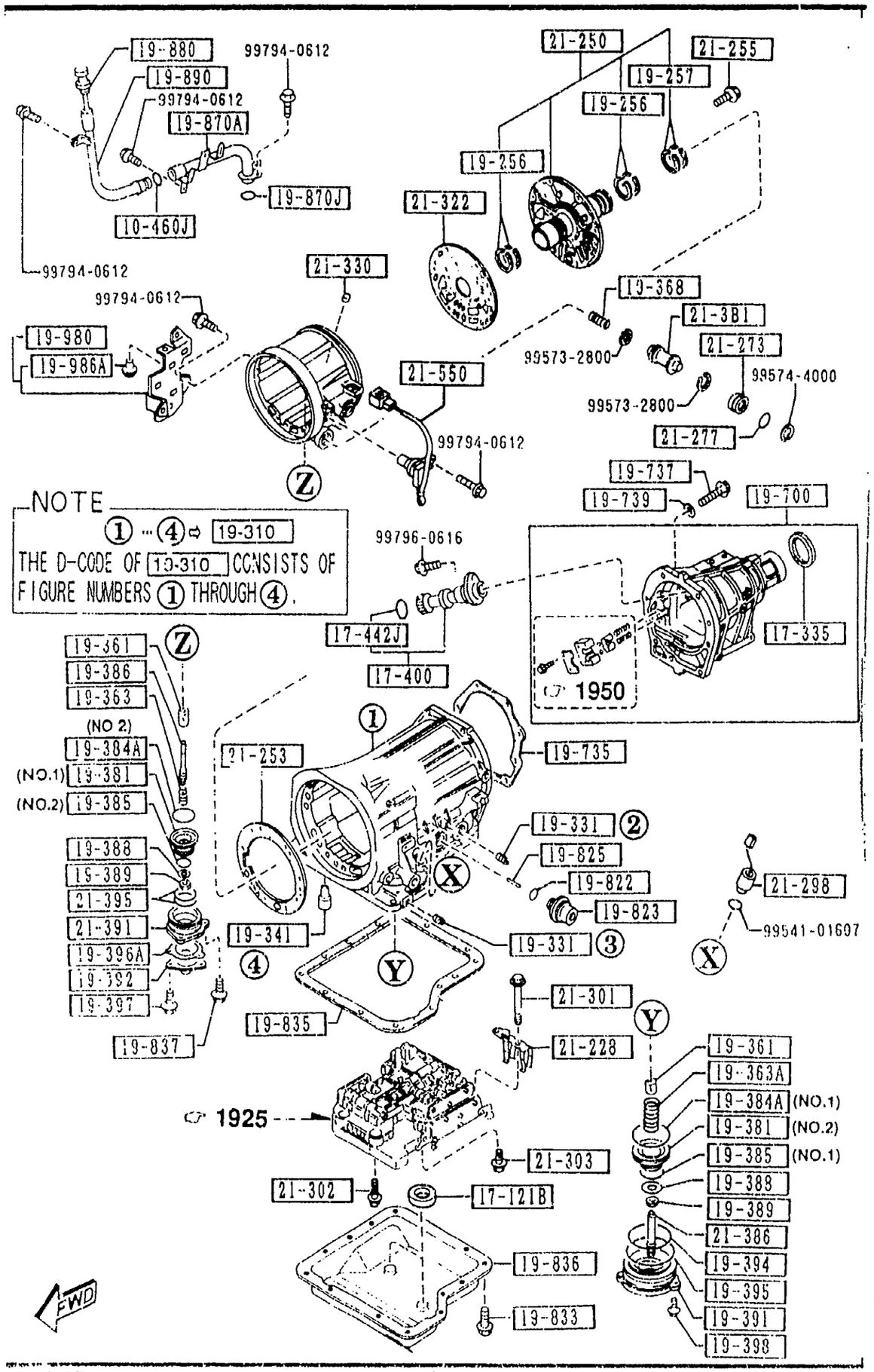






| PART NO. | QTY | MODEL/RESTRICTION | MODEL/RESTRICTION | MODEL/RESTRICTION | FROM-TO |
|---|---|---|---|---|---|
| 10-460J<br>99541-01201 | 1 | RING,'O' | | | |
| 17-121B<br>F401-17-121 | 2 | MAGNET | | | |
| 17-335<br>M507-17-335A | 1 | SEAL,OIL | | | |
| 17-400<br>N451-17-400 | 1 | GEAR SET,DRIVEN-SPEED | | | |
| 17-442J<br>1011-17-443 | 1 | RING,'O' | | | |
| 19-256<br>BU01-19-256 | 4 | RING,SEAL | | | |
| 19-257<br>BU01-19-257 | 2 | RING,SEAL | | | |
| 19-310<br>N451-19-310 | 1 | CASE,T/MISSION | | | |
| 19-331<br>0338-19-331A | 2 | PLUG,SQUARE HEAD | | | |
| 19-341<br>0338-19-341 | 1 | BOLT,ANCHOR END | | | |
| 19-361<br>0338-19-361B | 2 | STRUT,BAND | | | |
| 19-363<br>FT40-19-363 | 1 | SPRING,PISTON RETURN | | | |
| 19-363A<br>BU10-19-363 | 1 | SPRING,PISTON RETURN | | | |
| 19-368<br>BU20-19-368 | 1 | SPRING,CUSHION-PSTN STEM | | | |

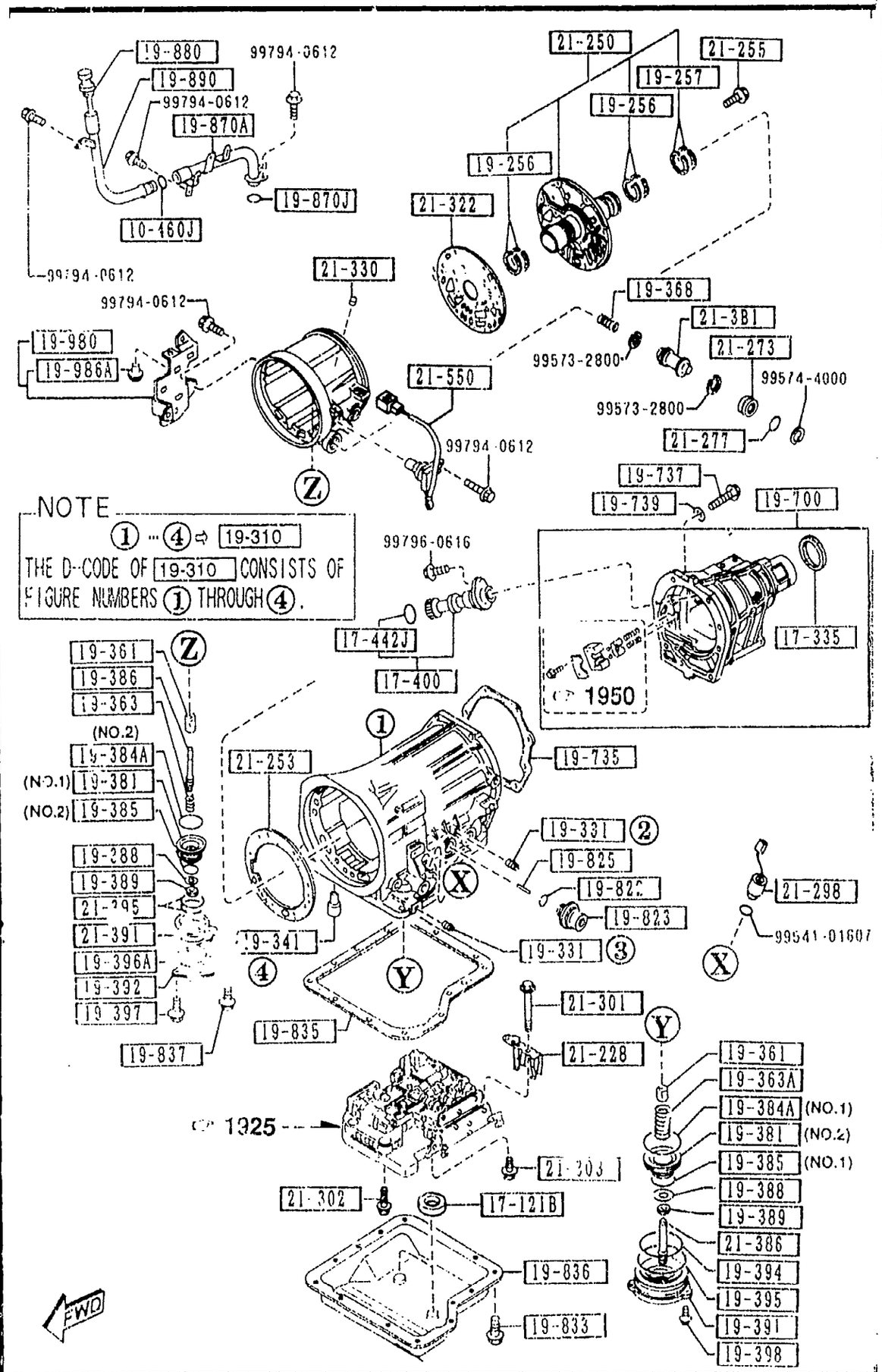






| PART NO. | QTY | MODEL/RESTRICTION | MODEL/RESTRICTION | MODEL/RESTRICTION | FROM-TO |
|---|---|---|---|---|---|
| 19-381 | | PISTON,BAND SERVO | | | |
| BV03-19-381 | 1 | (ILLUST. NO.1) | | | |
| N451-19-381 | 1 | (ILLUST. NO.2) | | | |
| 19-384A | | SEAL,PISTON | | | |
| BU10-19-384 | 1 | (ILLUST. NO.1) | | | |
| BU55-19-384 | 1 | (ILLUST. NO.2) | | | |
| 19-385 | | SEAL,PISTON | | | |
| BU05-19-385 | 1 | D=49.4MM (ILLUST. NO.1) | | | |
| 0842-19-385 | 1 | D=36MM (ILLUST. NO.2) | | | |
| 19-386 | | STEM,PISTON | | | |
| 0338-19-386A | 1 | | | | |
| 19-388 | | WASHER,PLAIN | | | |
| 0338-19-388A | 2 | | | | |
| 19-389 | | NUT | | | |
| 0338-19-389 | 2 | | | | |
| 19-391 | | RETAINER,SERVO | | | |
| N451-19-391 | 1 | | | | |
| 19-392 | | COVER,SERVO | | | |
| 1758-19-392A | 1 | | | | |
| 19-394 | | SEAL,LATHE CUT | | | |
| 0842-19-394 | 1 | | | | |
| 19-395 | | RING,'O' | | | |
| 0338-19-395 | 1 | | | | |
| 19-396A | | GASKET | | | |
| BU46-19-396 | 1 | NON ASBESTOS | | | |
| 19-397 | | BOLT | | | |
| 1758-19-397 | 3 | | | | |

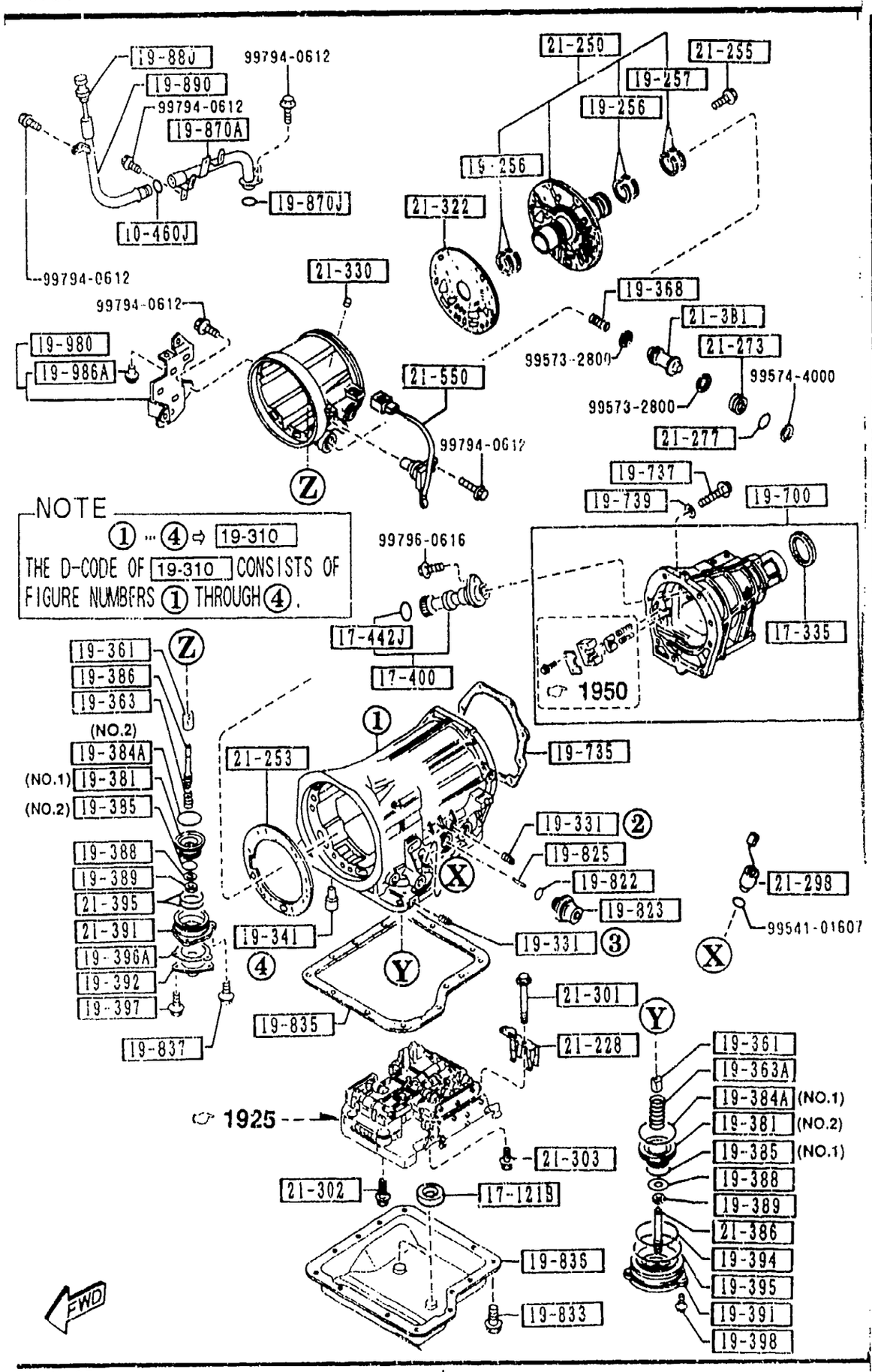






| PART NO. | QTY | MODEL/RESTRICTION | MODEL/RESTRICTION | MODEL/RESTRICTION | FROM-TO |
|---|---|---|---|---|---|
| 19-398 | | BOLT | | | |
| 0338-19-398 | 3 | | | | |
| 19-700 | | HOUSING,EXTENSION | | | |
| BUY2-19-7A0 | 1 | | | | |
| 19-735 | | GASKET,EXTENSION | | | |
| BT28-19-735 | 1 | NON ASBESTOS | | | |
| 19-737 | | BOLT | | | |
| BV12-19-737 | 8 | | | | |
| 19-739 | | WASHER,PLAIN | | | |
| BV40-19-739 | 8 | | | | |
| 19-822 | | SEAL,'O'RING | | | |
| 0338-19-822 | 1 | | | | |
| 19-823 | | DIAPHRAGM,VACUUM | | | |
| BT07-19-823 | 1 | | | | |
| 19-825 | | ROD,DIAPHRAGM | | | |
| BU55-19-825 | 1 | L=29.75MM | | | |
| 0338-19-825 | 1 | L=30.0MM | | | |
| 0338-19-826 | 1 | L=31.0MM | | | |
| 0338-19-827 | 1 | L=30.5MM | | | |
| 0338-19-828 | 1 | L=29.0MM | | | |
| 0338-19-829 | 1 | L=29.5MM | | | |
| 19-833 | | BOLT,CONTROL VALVE | | | |
| BU91-19-833 | 13 | L=15MM | | | |
| 19-835 | | GASKET,OIL PAN | | | |
| BT28-19-835 | 1 | NON ASBESTOS | | | |

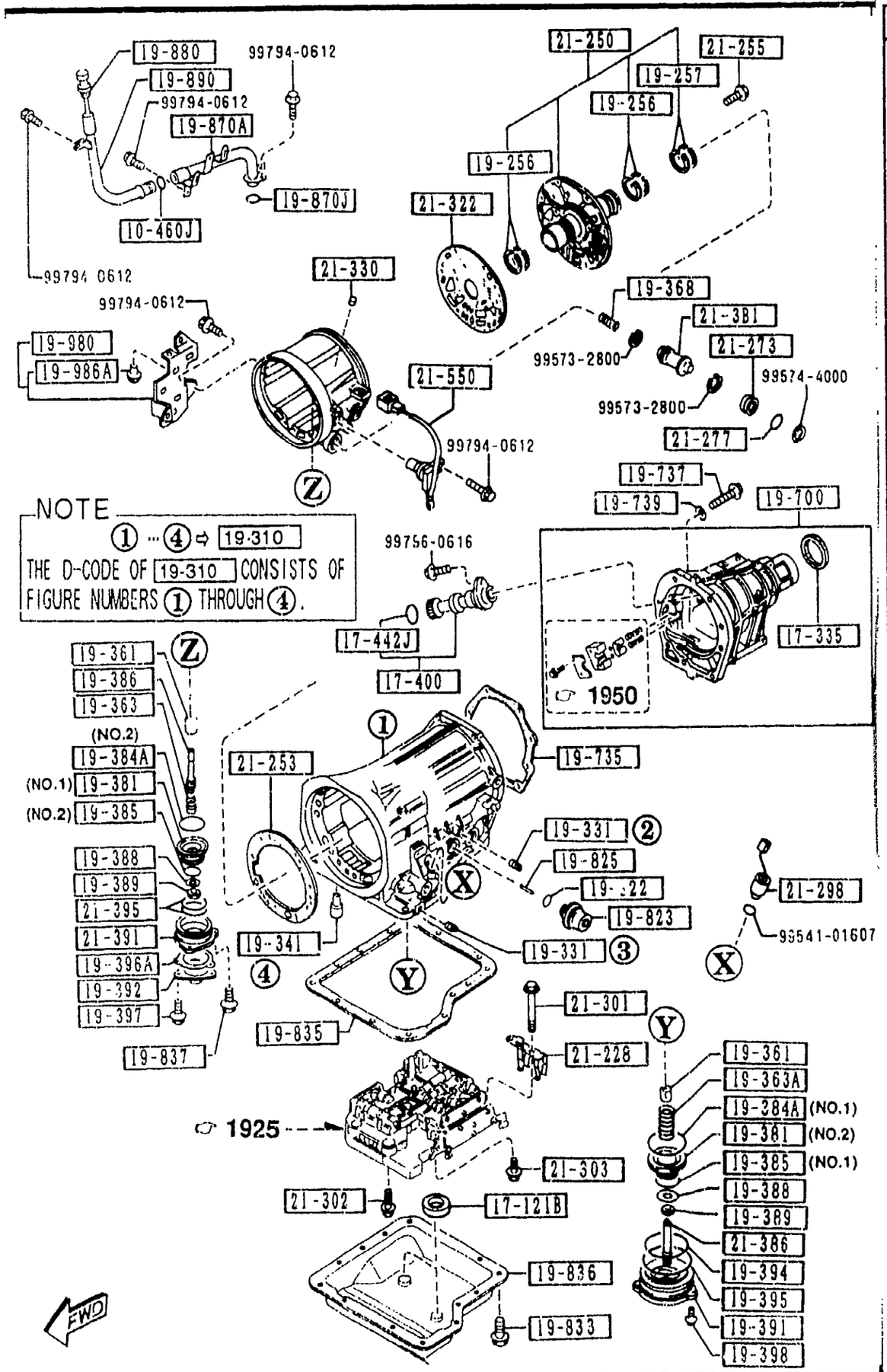


AUNA05



| PART NO. | QTY | MODEL/RESTRICTION | MODEL/RESTRICTION | MODEL/RESTRICTION | [illegible] M-TO |
|---|---|---|---|---|---|
| 19-836 | | PAN,OIL | | | |
| BV02-19-836 | 1 | | | | |
| 19-837 | | BOLT,OIL PAN | | | |
| 0338-19-837 | 3 | | | | |
| 19-870A | | TUBE,FILLER | | | |
| BU55-19-870 | 1 | | | | |
| 19-870J | | RING,'O' | | | |
| 99541-01601 | 1 | | | | |
| 19-880 | | GAUGE,OIL LEVEL | | | |
| BV55-19-880A | 1 | | | | |
| 19-890 | | TUBE,OIL FILTER-UPPER | | | |
| BU55-19-890 | 1 | | | | |
| 19-980 | | BRACKET | | | |
| BU55-19-980A | 1 | | | | |
| 19-986A | | BUSH,RUBBER | | | |
| BV01-19-986 | 1 | | | | |
| 21-228 | | HOLDER,SOCKET | | | |
| BV01-21-228A | 1 | | | | |
| 21-250 | | SUPPORT,DRUM | | | |
| BV01-21-250A | 1 | | | | |
| 21-253 | | GASKET,DRUM SUPPORT | | | |
| BU46-21-2F3 | 1 | NON ASBESTOS | | | |
| 21-255 | | BOLT | | | |
| BU01-21-255 | 5 | | | | |
| 21-273 | | PLUG,ACCUMULATOR | | | |
| BU01-21-273 | 1 | | | | |
| 21-277 | | RING,'O' | | | |

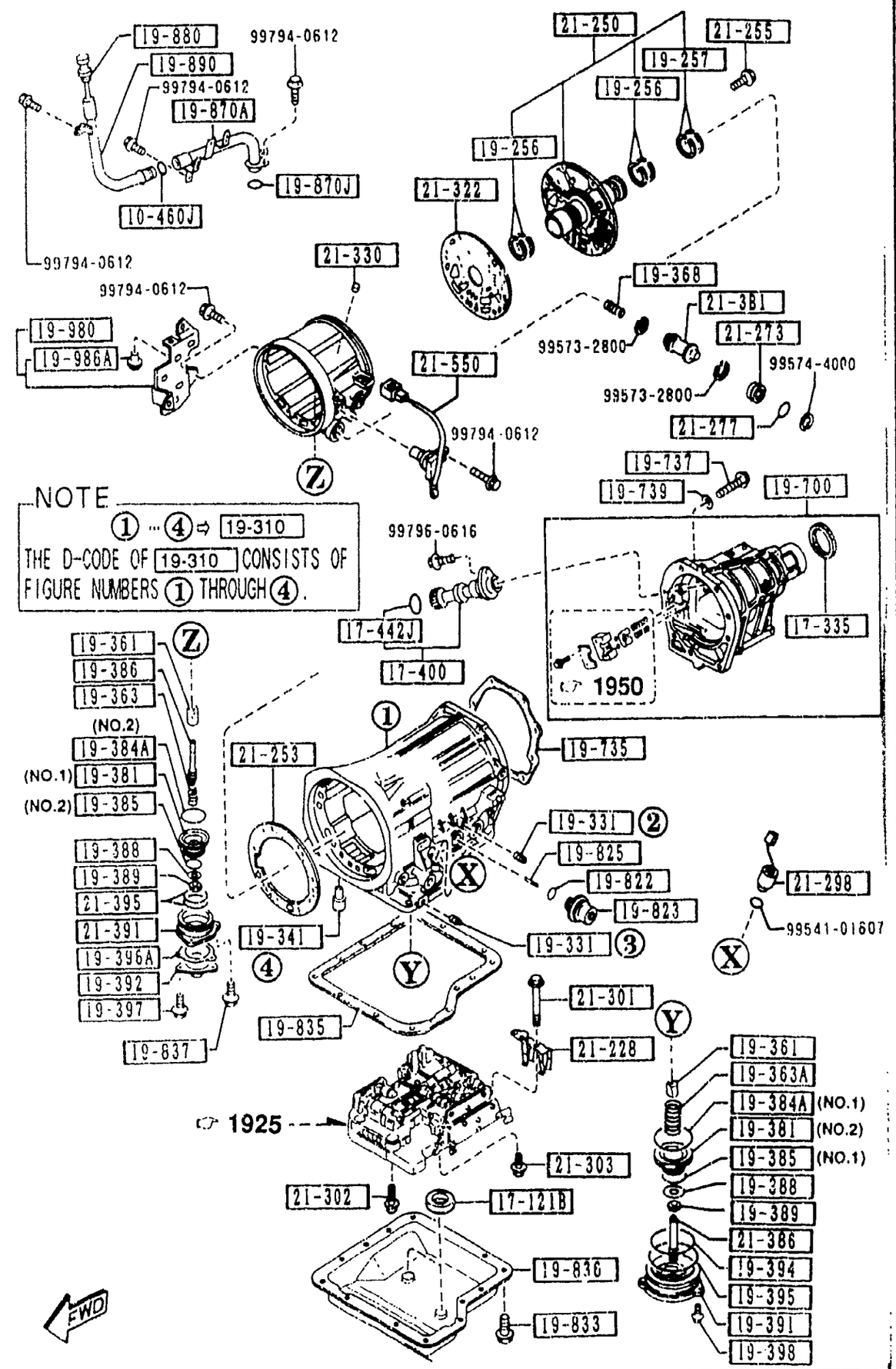






| PART NO. | QTY | MODEL/RESTRICTION | MODEL/RESTRICTION | MODEL/RESTRICTION | FROM-TO |
|---|---|---|---|---|---|
| CONT'D | | | | | |
| BU01-21-277 | 1 | | | | |
| 21-298 | | COUPLER,SOLENOID VALVE | | | |
| BV09-21-2K0 | 1 | | | | |
| 21-381 | | PISTON,ACCUMULATOR | | | |
| N451-21-381 | 1 | | | | |
| 21-301 | | BOLT,CONTROL VALVE | | | |
| BV01-21-301 | 2 | | | | |
| 21-302 | | BOLT,CONTROL VALVE | | | |
| BV01-21-302 | 4 | | | | |
| 21-303 | | BOLT,CONTROL VALVE | | | |
| BV01-21-303 | 1 | | | | |
| 21-322 | | GASKET,O/DRIVE CASE | | | |
| BU46-21-3C2 | 1 | | | | |
| 21-330 | | VALVE,ONE WAY | | | |
| BV01-21-330 | 1 | | | | |
| 21-386 | | STEM,PISTON BAND | | | |
| BU01-21-386 | 1 | | | | |
| 21-391 | | RETAINER,SERVO | | | |
| BV02-21-391 | 1 | | | | |
| 21-395 | | RING,'O' | | | |
| BU01-21-395 | 2 | | | | |
| 21-550 | | GENERATOR,PULSE | | | |
| N451-21-550A | 1 | | | | |

NOTE

① ··· ② ⇨ 19-750

THE D-CODE OF 19-750 CONSISTS OF FIGURE NUMBERS ① THROUGH ②.

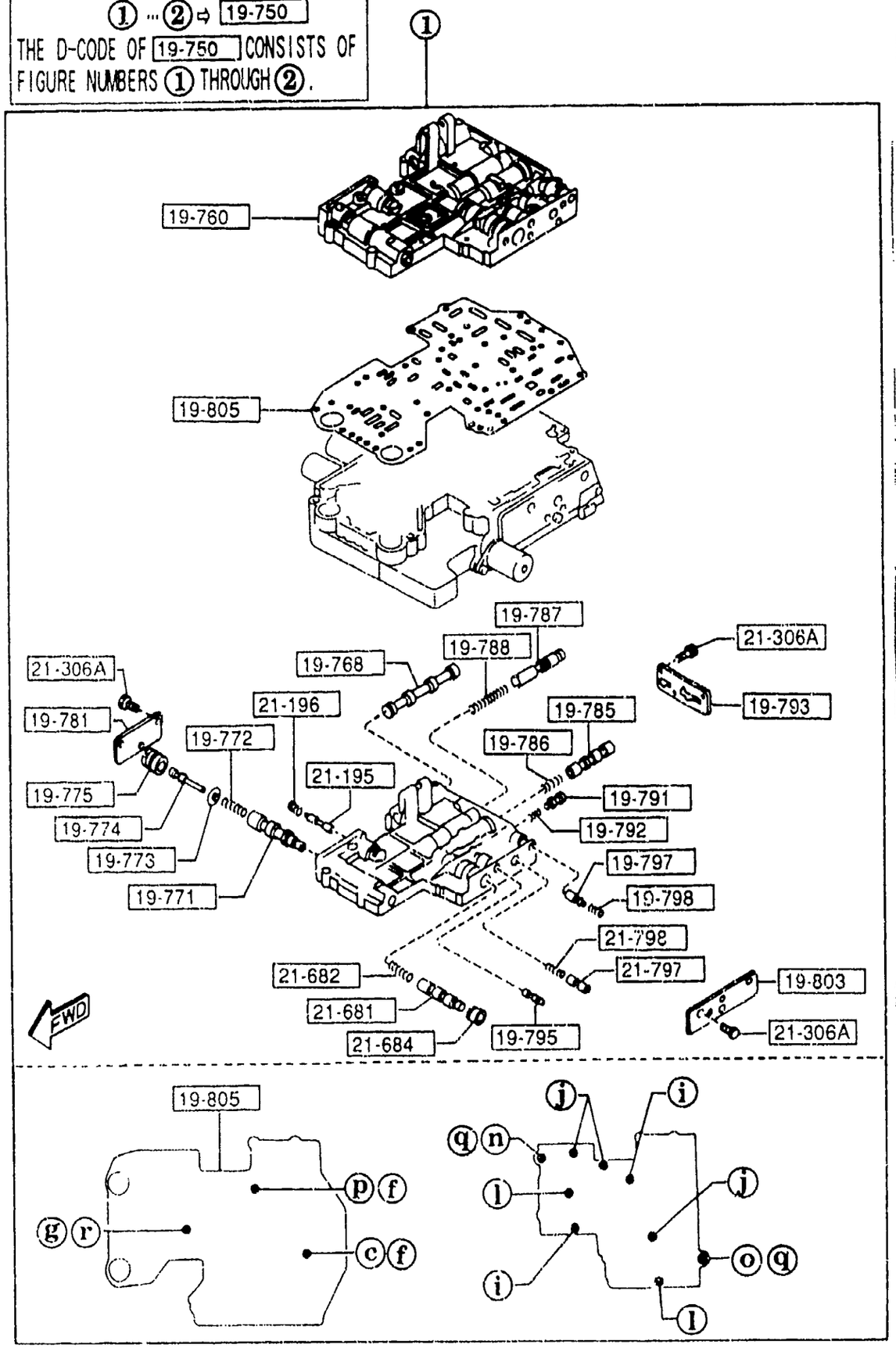






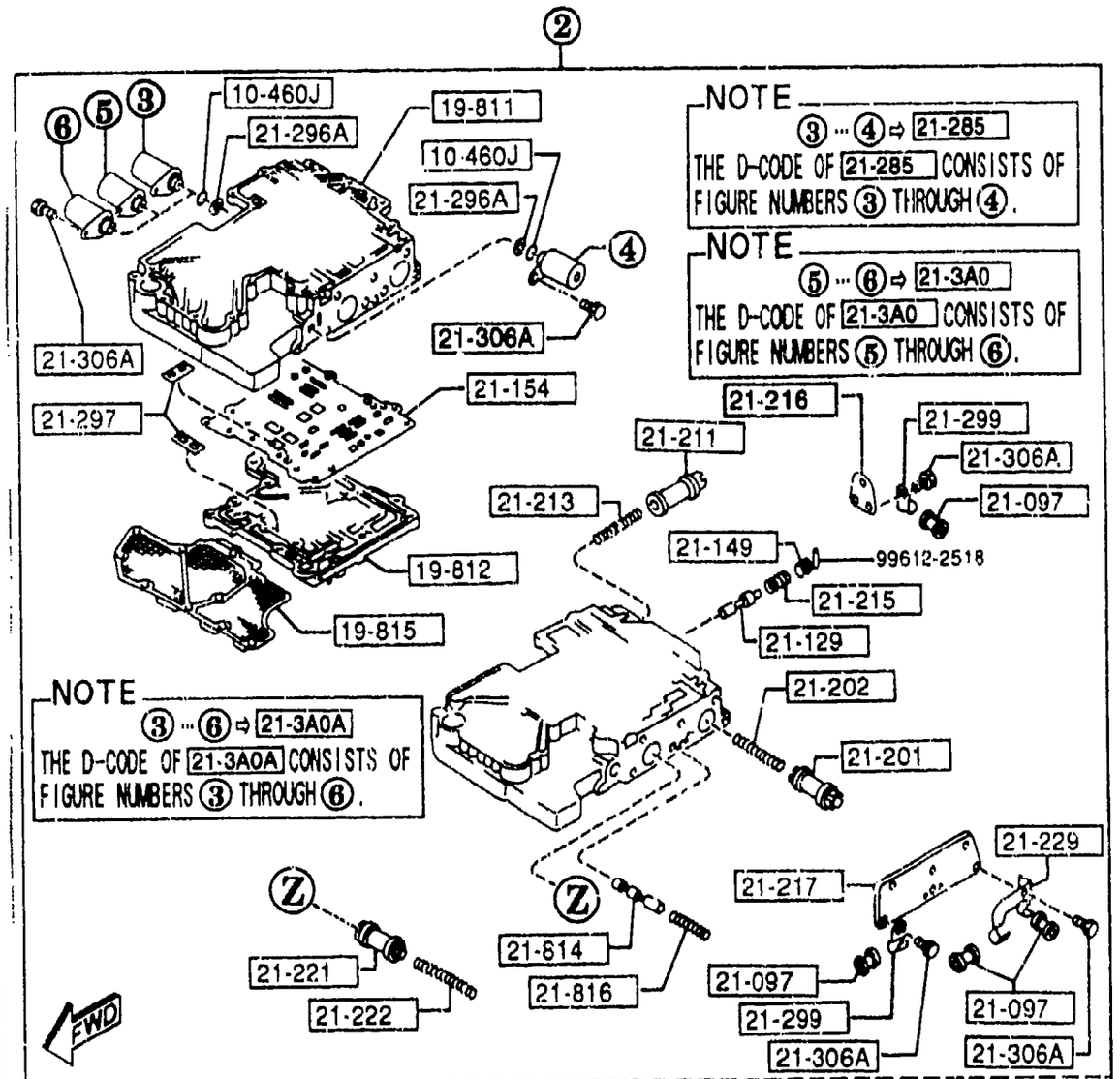


NOTE

③ ··· ④ ⇨ 21-285

THE D-CODE OF 21-285 CONSISTS OF FIGURE NUMBERS ③ THROUGH ④.

NOTE

⑤ ··· ⑥ ⇨ 21-3A0

THE D-CODE OF 21-3A0 CONSISTS OF FIGURE NUMBERS ⑤ THROUGH ⑥.

NOTE

③ ··· ⑥ ⇨ 21-3A0A

THE D-CODE OF 21-3A0A CONSISTS OF FIGURE NUMBERS ③ THROUGH ⑥.

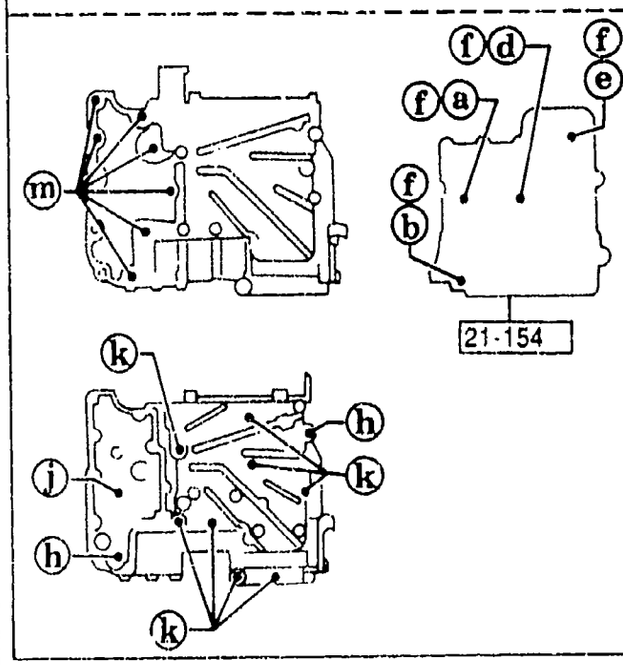


| | | | |
|---|---|---|---|
| a | | 19-8A2 | D=1.0MM |
| b | | 19-8A3 | D=1.1MM |
| c | | 19-8A4 | D=1.2MM |
| d | | 19-8B2 | D=1.5MM |
| e | | 19-8B4 | D=2.2MM |
| f | | 19-808 | D=4.7MM,L=15.5MM |
| g | | 19-814 | D=5.6MM,L=26.8MM |
| h | | 19-819 | |
| i | | 21-261 | L=30MM |
| j | | 21-262 | L=35MM |
| k | | 21-263 | L=25MM |
| l | | 21-264 | L=40MM |
| m | | 21-265 | L=12MM |
| n | | 21-302 | L=59MM |
| o | | 21-305 | L=82MM |
| p | | 21-333 | |
| q | | 21-446 | D=12.5MM,d=6.4MM |
| | | | |
| r | | 99611-2000 | |

NOTE

① ··· ② ⇨ 19-750

THE D-CODE OF 19-750 CONSISTS OF FIGURE NUMBERS ① THROUGH ②.

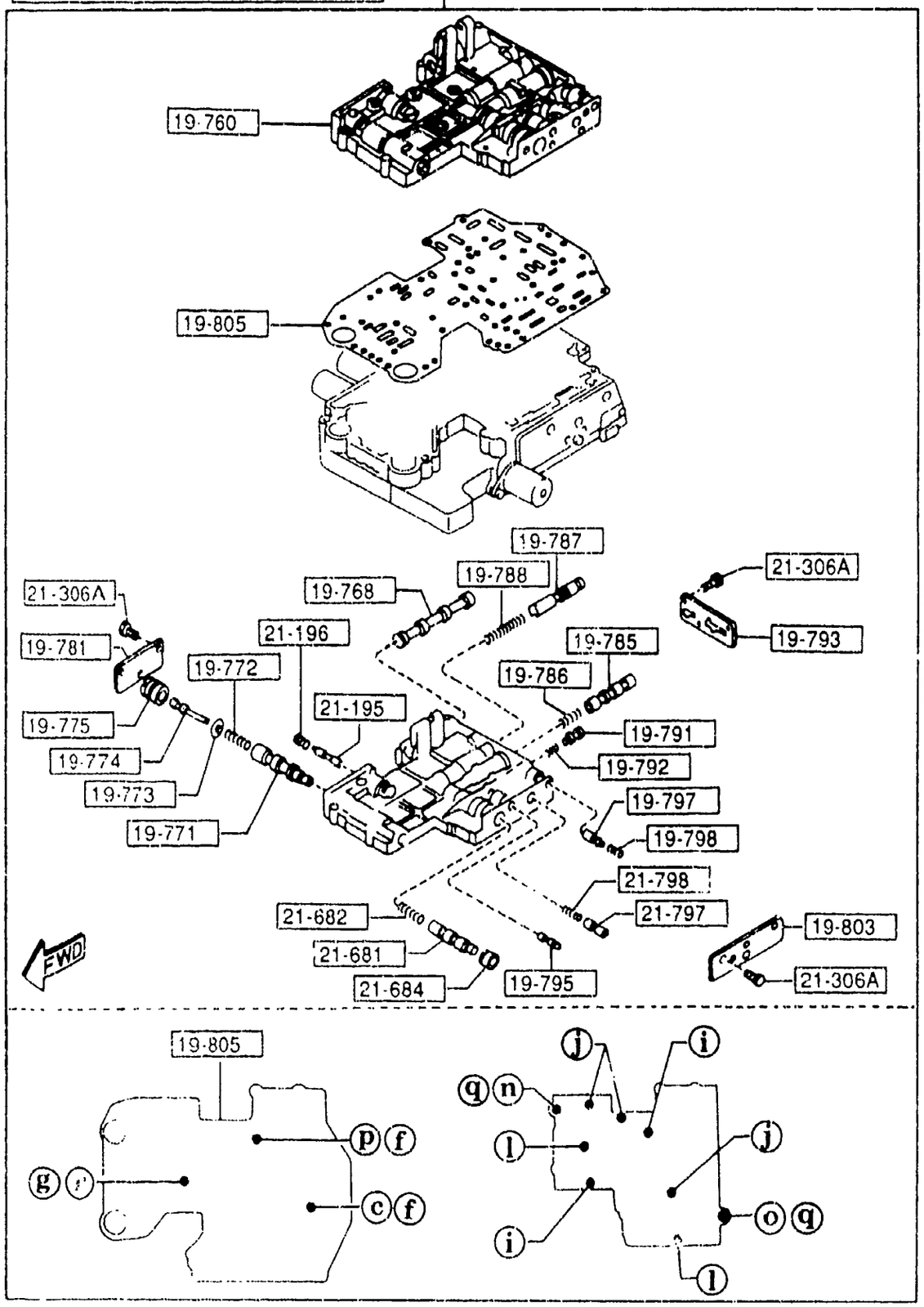




| PART NO. | QTY | MODEL/RE TRICTION | MODEL/RESTRICTION | MODEL/RESTRICTION | FROM-TO |
|---|---|---|---|---|---|
| 10-460J<br>99541-00707 | 4 | RING,'O' | | | -6110 |
| 19-750<br>N451-19-750 | 1 | VALVE,CONTROL | | | |
| 19-760<br>BV01-19-760F | 1 | BODY,CONTROL VALVE-UP | | | |
| 19-768<br>BU91-19-768 | 1 | VALVE,MANUAL | | | |
| 19-771<br>BV01-19-771 | 1 | VALVE,REGULATOR | | | |
| 19-772<br>0338-19-772 | 1 | SPRING,REGULATOR | | | |
| 19-773<br>0338-19-773 | 1 | SEAT,REGULATOR SPRING | | | |
| 19-774<br>N451-19-774 | 1 | PLUG,REGULATOR | | | |
| 19-775<br>N451-19-775 | 1 | SLEEVE,REGULATOR PLUG | | | |
| 19-781<br>1758-19-781 | 1 | PLATE,SIDE'D' | | | |
| 19-785<br>BV01-19-785 | 1 | VALVE,1-2 SHIFT | | | |
| 19-786<br>BV11-19-527 | 1 | SPRING,1-2 SHIFT | | | |
| 19-787<br>N451-19-787 | 1 | VALVE,2-3 SHIFT | | | |
| 19-788<br>N451-19-788 | 1 | SPRING,2-3 SHIFT | | | |

6110 NA3** -709212

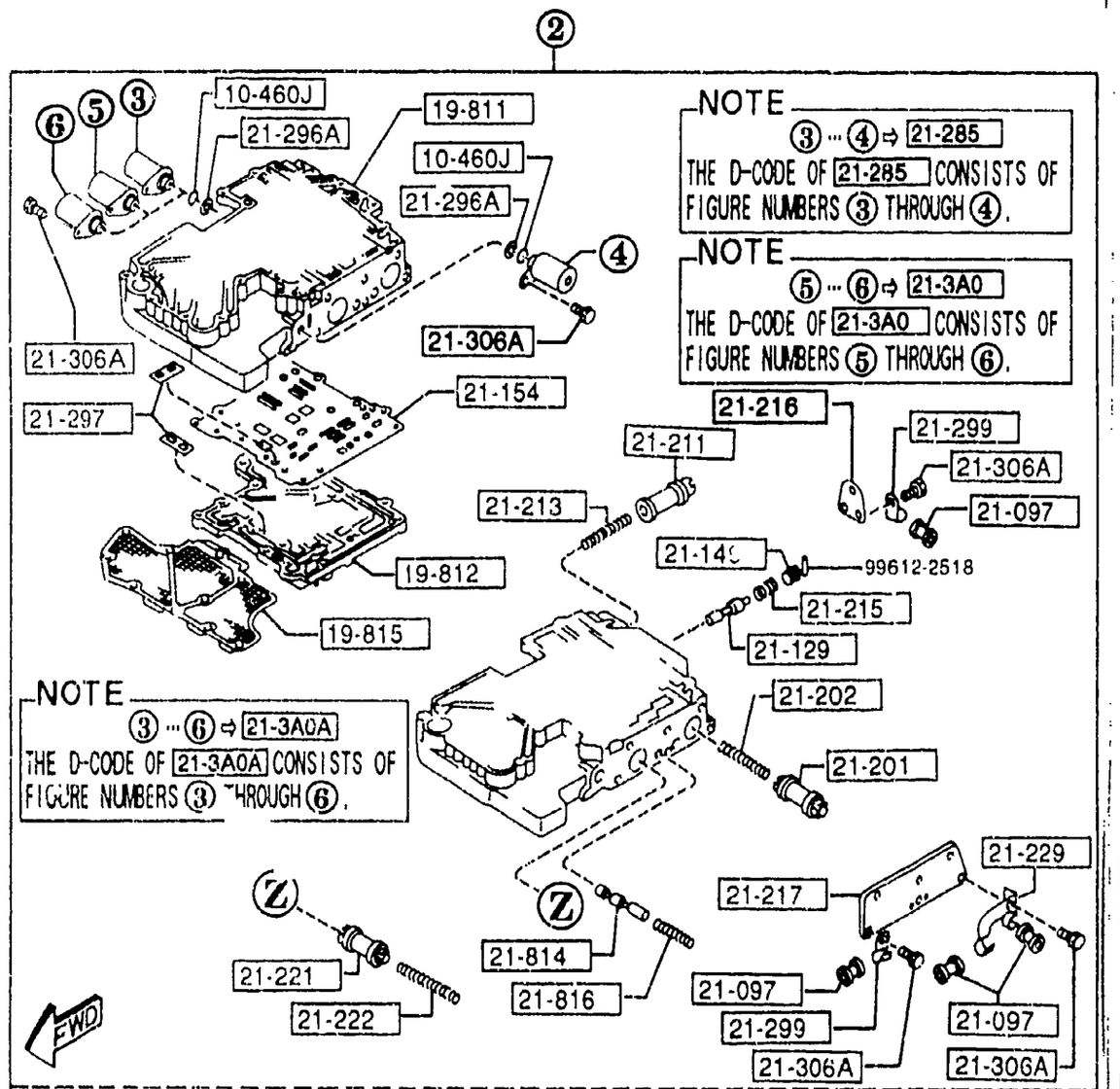


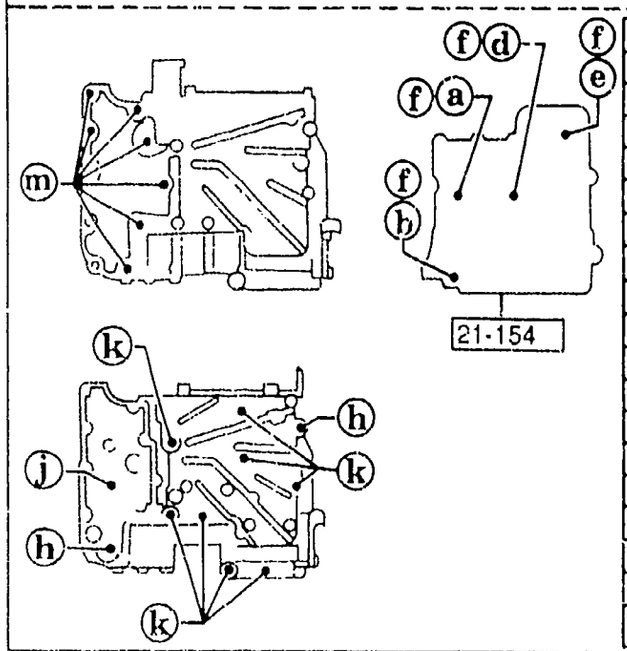


| | | | |
|---|---|---|---|
| a | D | 19-8A2 | D=1.0MM |
| b | | 19-8A3 | D=1.1MM |
| c | | 19-8A4 | D=1.2MM |
| d | | 19-8B2 | D=1.5MM |
| e | | 19-8B4 | D=2.2MM |
| f | L D | 19-808 | D=4.7MM,L=15.5MM |
| g | | 19-814 | D=5.6MM,L=26.8MM |
| h | | 19-819 | |
| i | L | 21-261 | L=30MM |
| j | | 21-262 | L=35MM |
| k | | 21-263 | L=25MM |
| l | | 21-264 | L=40MM |
| m | | 21-265 | L=12MM |
| n | | 21-302 | L=59MM |
| o | | 21-305 | L=82MM |
| p | | 21-333 | |
| q | D d | 21-446 | D=12.5MM,d=6.4MM |
| | | | |
| r | | 99611-2000 | |

| PART NO. | QTY | MODEL/RESTRICTION | MODEL/RESTRICTION | MODEL/RESTRICTION | FROM-TO |
|---|---|---|---|---|---|
| 19-791 | | VALVE,MODIFIER | | | |
| 0338-19-791A | 1 | | | | |
| 19-792 | | SPRING,MODIFIER | | | |
| BV01-19-792 | 1 | | | | |
| 19-793 | | PLATE,SIDE'A' | | | |
| BV01-19-793 | 1 | | | | |
| 19-795 | | VALVE,THROTTLE | | | |
| N451-19-795 | 1 | | | | |
| 19-797 | | VALVE,THROTTLE BACK-UP | | | |
| BV01-19-797A | 1 | | | | |
| 19-798 | | SPRING,THROTTLE BACK-UP | | | |
| N451-19-798 | 1 | | | | |
| 19-8A2 | | VALVE,ORIFICE CHECK | | | |
| BV01-19-8A2 | 1 | | | | |
| 19-8A3 | | VALVE,ORIFICE CHECK | | | |
| BV01-19-8A3 | 1 | | | | |
| 19-8A4 | | VALVE,ORIFICE CHECK | | | |
| BV01-19-8A4 | 1 | | | | |
| 19-8B2 | | VALVE,ORIFICE CHECK | | | |
| BV01-19-8B2 | 1 | | | | |
| 19-8B4 | | VALVE,ORIFICE CHECK | | | |
| BV01-19-8B4 | 1 | | | | |
| 19-803 | | PLATE,SIDE'B' | | | |
| BV01-19-803 | 1 | | | | |
| 19-805 | | PLATE,SEPARATOR | | | |
| BV17-19-805 | 1 | | | | |
| 19-808 | | SPRING | | | |
| 0338-19-808 | 6 | | | | |

NOTE

① ··· ② ⇨ 19-750

THE D-CODE OF 19-750 CONSISTS OF FIGURE NUMBERS ① THROUGH ②.

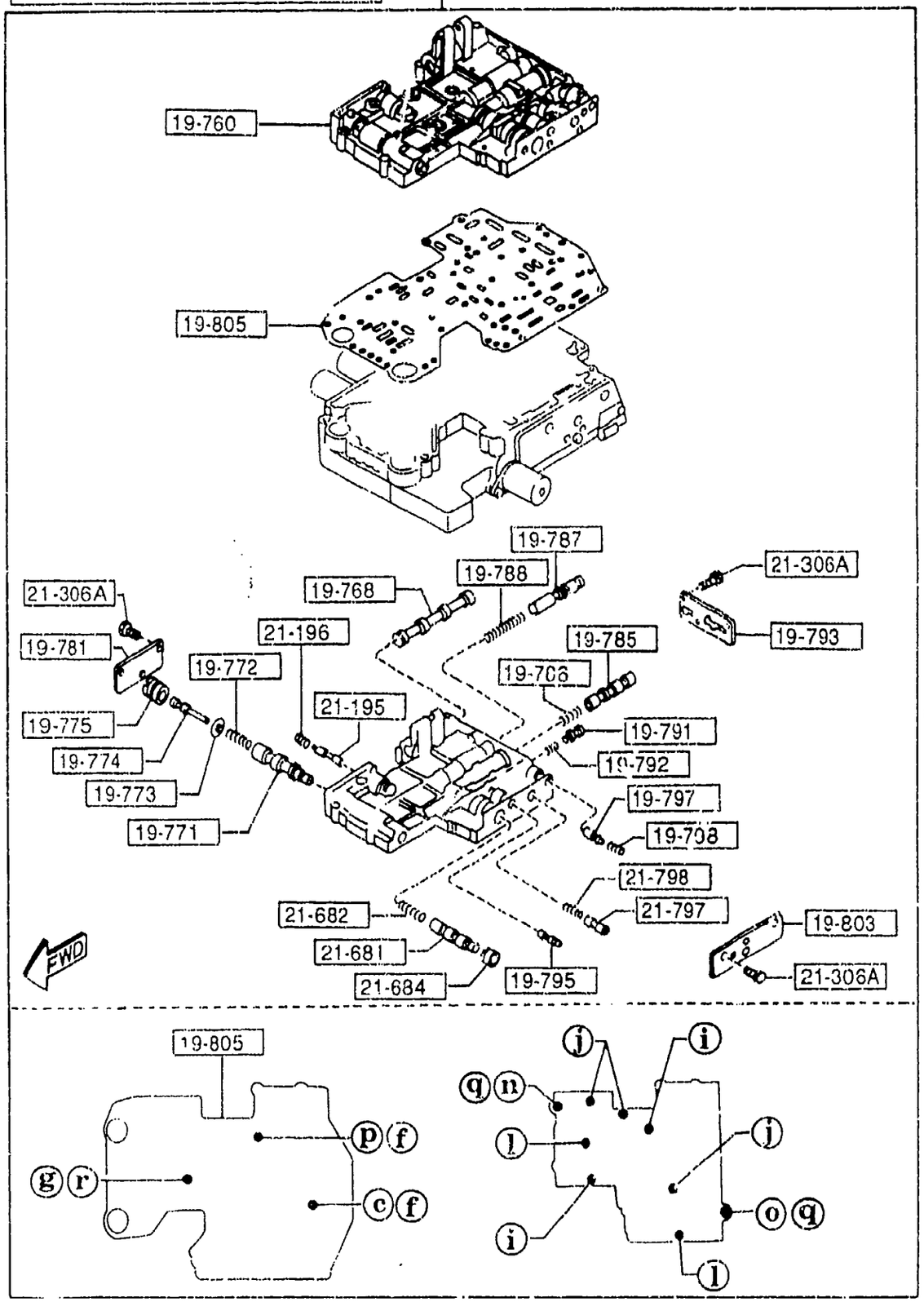






| PART NO. | QTY | MODEL/RESTRICTION | MODEL/RESTRICTION | MODEL/RESTRICTION | FROM-TO |
|---|---|---|---|---|---|
| 19-811 | | BODY,VALVE LWR | | | |
| BV02-19-811C | 1 | | | | |
| 19-812 | | COVER,VALVE BODY | | | |
| BV01-19-812A | 1 | | | | |
| 19-814 | | SPRING | | | |
| 0338-19-814 | 1 | | | | |
| 19-815 | | STRAINER,OIL | | | |
| BV01-19-815 | 1 | | | | |
| 19-819 | | NUT | | | |
| BV01-19-819 | 2 | | | | |
| 21-097 | | PROTECTOR | | | |
| FU01-21-097 | 4 | | | | |
| 21-129 | | VALVE,1-2 REDUCING | | | |
| BV01-21-129 | 1 | | | | |
| 21-149 | | PLUG,STOPPER | | | |
| BV01-21-149A | 1 | | | | |
| 21-154 | | PLATE,SEPARATOR | | | |
| N451-21-154 | 1 | | | | |
| 21-195 | | VALVE,REDUCING | | | |
| BV01-21-195 | 1 | | | | |
| 21-196 | | SPRING,REDUCING | | | |
| BV01-21-196 | 1 | | | | |
| 21-201 | | PISTON,ACCUM | | | |
| N451-21-201 | 1 | | | | |
| 21-202 | | SPRING,ACCUM N-R | | | |
| BV06-21-202 | 1 | | | | |
| 21-211 | | PISTON,N/D ACCUM | | | |
| N451-21-211 | 1 | | | | |

# 1925 AUTOMATIC TRANSMISSION CONTROL VALVE

(2/2)

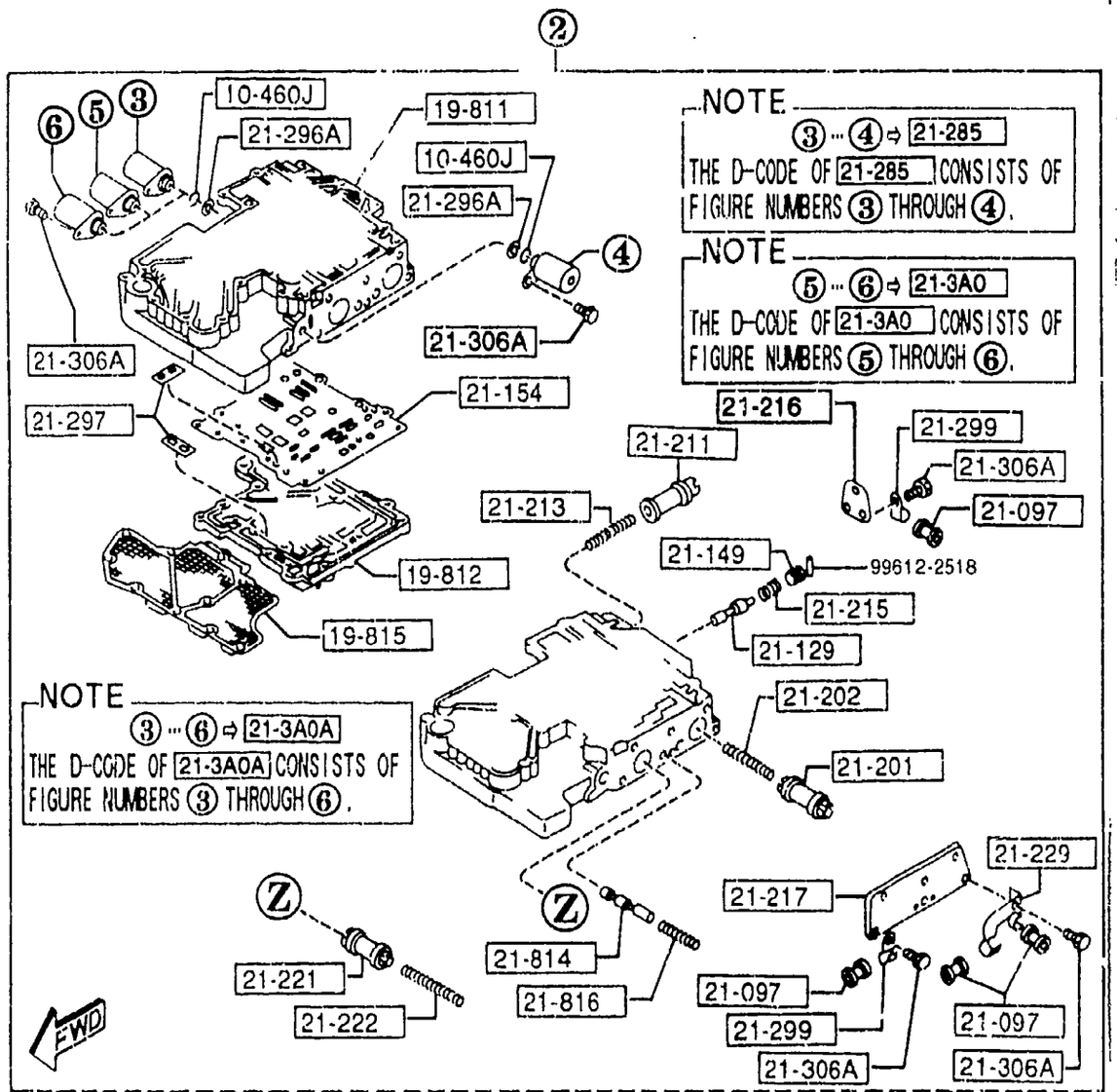


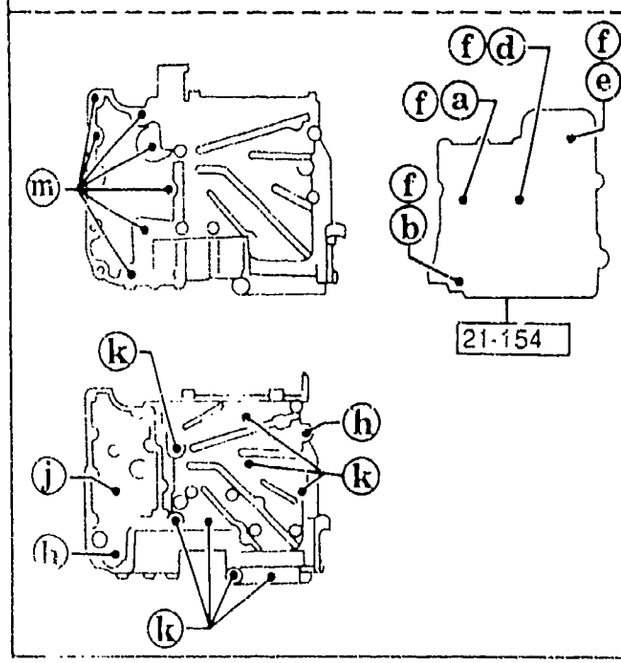


| | | | |
|---|---|---|---|
| a | D | 19-8A2 | D=1.0MM |
| b | | 19-8A3 | D=1.1MM |
| c | | 19-8A4 | D=1.2MM |
| d | | 19-8B2 | D=1.5MM |
| e | | 19-8B4 | D=2.2MM |
| f | L, D | 19-808 | D=4.7MM,L=15.5MM |
| g | | 19-814 | D=5.6MM,L=26.8MM |
| h | | 19-819 | |
| i | L | 21-261 | L=30MM |
| j | | 21-262 | L=35MM |
| k | | 21-263 | L=25MM |
| l | | 21-264 | L=40MM |
| m | | 21-265 | L=12MM |
| n | | 21-302 | L=59MM |
| o | | 21-305 | L=82MM |
| p | | 21-333 | |
| q | D, d | 21-446 | D=12.5MM,d=6.4MM |
| | | | |
| r | | 99611-2000 | |

| PART NO. | QTY | MODEL/RESTRICTION | MODEL/RESTRICTION | MODEL/RESTRICTION | FROM-TO |
|---|---|---|---|---|---|
| 21-213 | | SPRING,N/D ACCUM | | | |
| BV01-21-213 | 1 | | | | |
| 21-215 | | SPRING,BY-PASS | | | |
| BV02-21-215 | 1 | | | | |
| 21-216 | | PLATE'E',SIDE | | | |
| BV01-21-216 | 1 | | | | |
| 21-217 | | PLATE'F',SIDE | | | |
| BV01-21-217 | 1 | | | | |
| 21-221 | | PISTON,1/2 ACCUM | | | |
| N451-21-221 | 1 | | | | |
| 21-222 | | SPRING,ACCUM 1-2 | | | |
| BV02-21-222B | 1 | | | | |
| 21-229 | | CLIP | | | |
| BV01-21-229A | 1 | | | | |
| 21-261 | | BOLT | | | |
| N451-21-261 | 2 | | | | |
| 21-262 | | BOLT | | | |
| N451-21-262 | 4 | | | | |
| 21-263 | | BOLT | | | |
| N451-21-263 | 8 | | | | |
| 21-264 | | BOLT | | | |
| N451-21-264 | 2 | | | | |
| 21-265 | | BOLT | | | |
| FU01-21-265C | 7 | | | | |
| 21-285 | | VALVE,SOLENOID | | | |
| BV01-21-280A | 1 | | | | 5201- |
| 21-296A | | STRAINER,OIL | | | |
| BV01-21-296 | 4 | | | | |

5201 NA35* -614193

NOTE

① ··· ② ⇨ 19-750

THE D-CODE OF 19-750 CONSISTS OF FIGURE NUMBERS ① THROUGH ②.

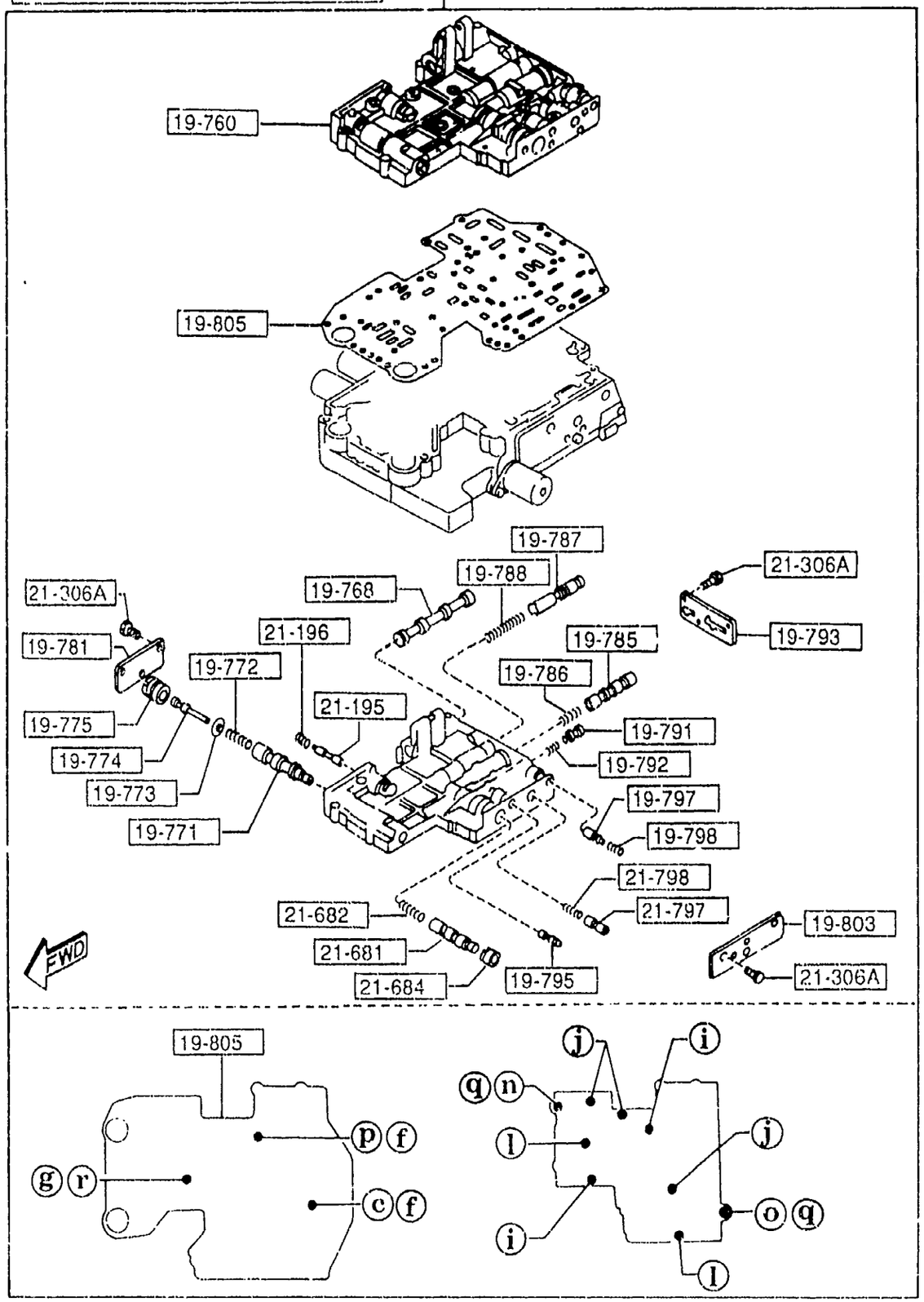




| PART NO. | QTY | MODEL/RESTRICTION | MODEL/RESTRICTION | MODEL/RESTRICTION | FROM-TO |
|---|---|---|---|---|---|
| 21-297 | | STRAINER,INNER | | | |
| BV01-21-297 | 2 | | | | |
| 21-299 | | CLIP | | | |
| BV01-21-299 | 2 | | | | |
| 21-3A0 | | SOLENOID | | | |
| BV02-21-3A0A | 1 | | | | 5201- |
| 21-3A0A | | VALVE,SOLENOID NO1 | | | |
| BV01-21-3A0A | 1 | | | | -5201 |
| 21-302 | | BOLT,CONTROL VALVE | | | |
| BV02-21-302 | 1 | | | | |
| 21-305 | | BOLT | | | |
| BV01-21-305B | 1 | | | | |
| 21-306A | | BOLT | | | |
| BV01-21-306 | 22 | | | | |
| 21-333 | | VALVE,ONE WAY | | | |
| BV01-21-333 | 1 | | | | |
| 21-446 | | WASHER,DISHED | | | |
| BV01-21-446 | 2 | | | | |
| 21-681 | | VALVE,SHIFT 3-4 | | | |
| BV01-21-681 | 1 | | | | |
| 21-682 | | SPRING,3-4 SHIFT | | | |
| BV01-21-682 | 1 | | | | |
| 21-684 | | VALVE,3-4 SHIFT-COAST | | | |
| BV01-21-684 | 1 | | | | |
| 21-797 | | VALVE,CONTROL BACK UP | | | |
| BV01-21-797 | 1 | | | | |
| 21-798 | | SPRING,BACK UP | | | |
| BV01-21-798 | 1 | | | | |

5201 NA35* -614193

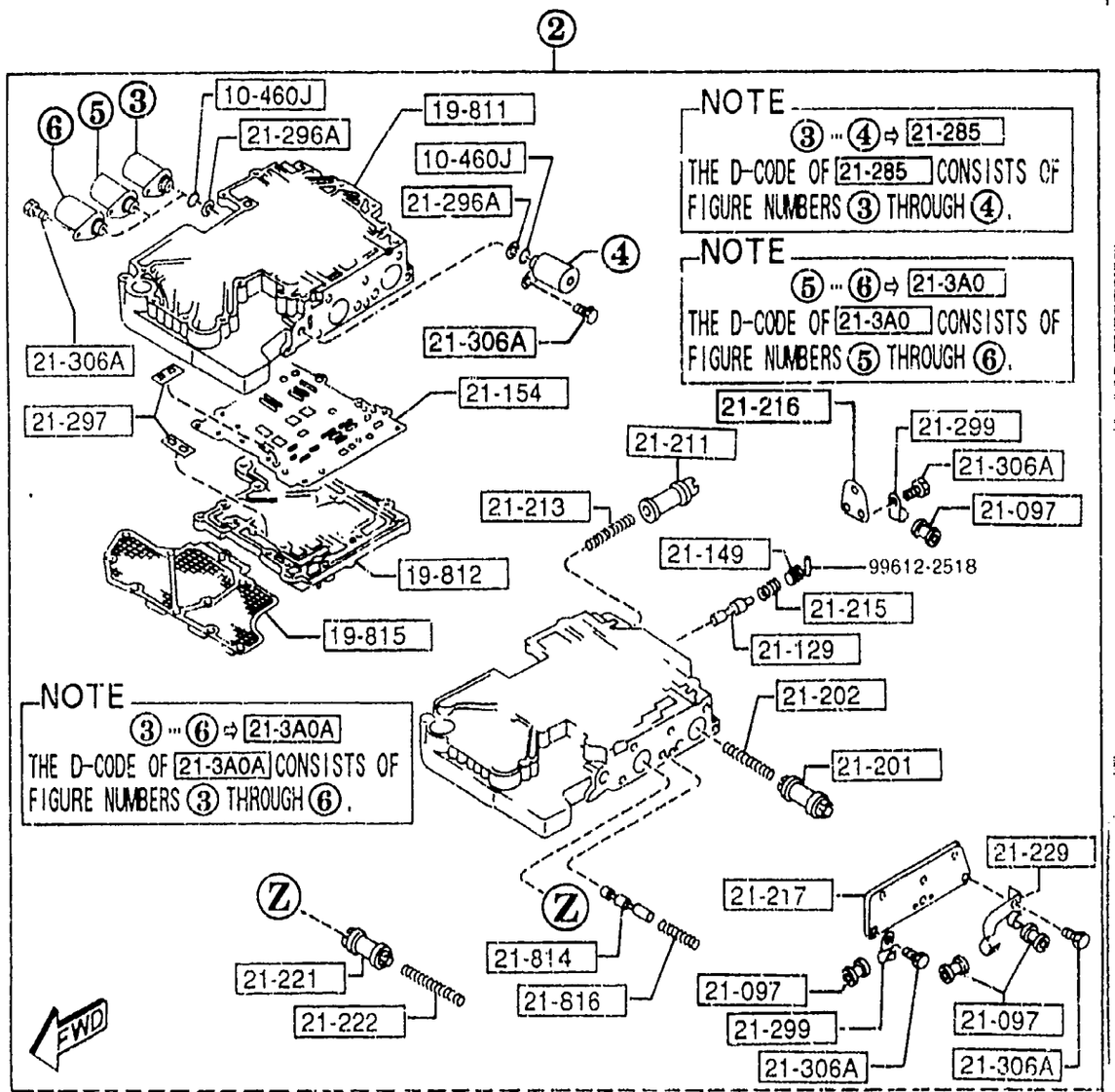


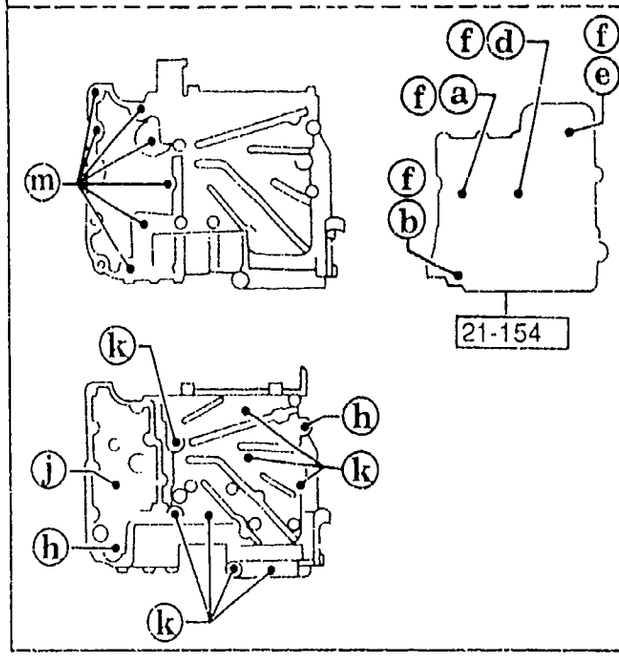


| | | | |
|---|---|---|---|
| a | | 19-8A2 | D=1.0MM |
| b | | 19-8A3 | D=1.1MM |
| c | D | 19-8A4 | D=1.2MM |
| d | | 19-8B2 | D=1.5MM |
| e | | 19-8B4 | D=2.2MM |
| f | L | 19-808 | D=4.7MM,L=15.5MM |
| g | D | 19-814 | D=5.6MM,L=26.8MM |
| h | | 19-819 | |
| i | | 21-261 | L=30MM |
| j | | 21-262 | L=35MM |
| k | | 21-263 | L=25MM |
| l | L | 21-264 | L=40MM |
| m | | 21-265 | L=12MM |
| n | | 21-302 | L=59MM |
| o | | 21-305 | L=62MM |
| p | | 21-333 | |
| q | D d | 21-446 | D=12.5MM,d=6.4MM |
| | | | |
| r | | 99611-2000 | |

| PART NO. | QTY | MODEL/RESTRICTION | MODEL/RESTRICTION | MODEL/RESTRICTION | FROM-TO |
|---|---|---|---|---|---|
| +---------+ | | | | | |
| \| 21-814 \| | | SPRING,3-2 TIMING | | | |
| +---------+ | | | | | |
| BV01-21-814 | 1 | | | | |
| +---------+ | | | | | |
| \| 21-816 \| | | SPRING,3-2 TIMING | | | |
| +---------+ | | | | | |
| BV01-21-816 | 1 | | | | |

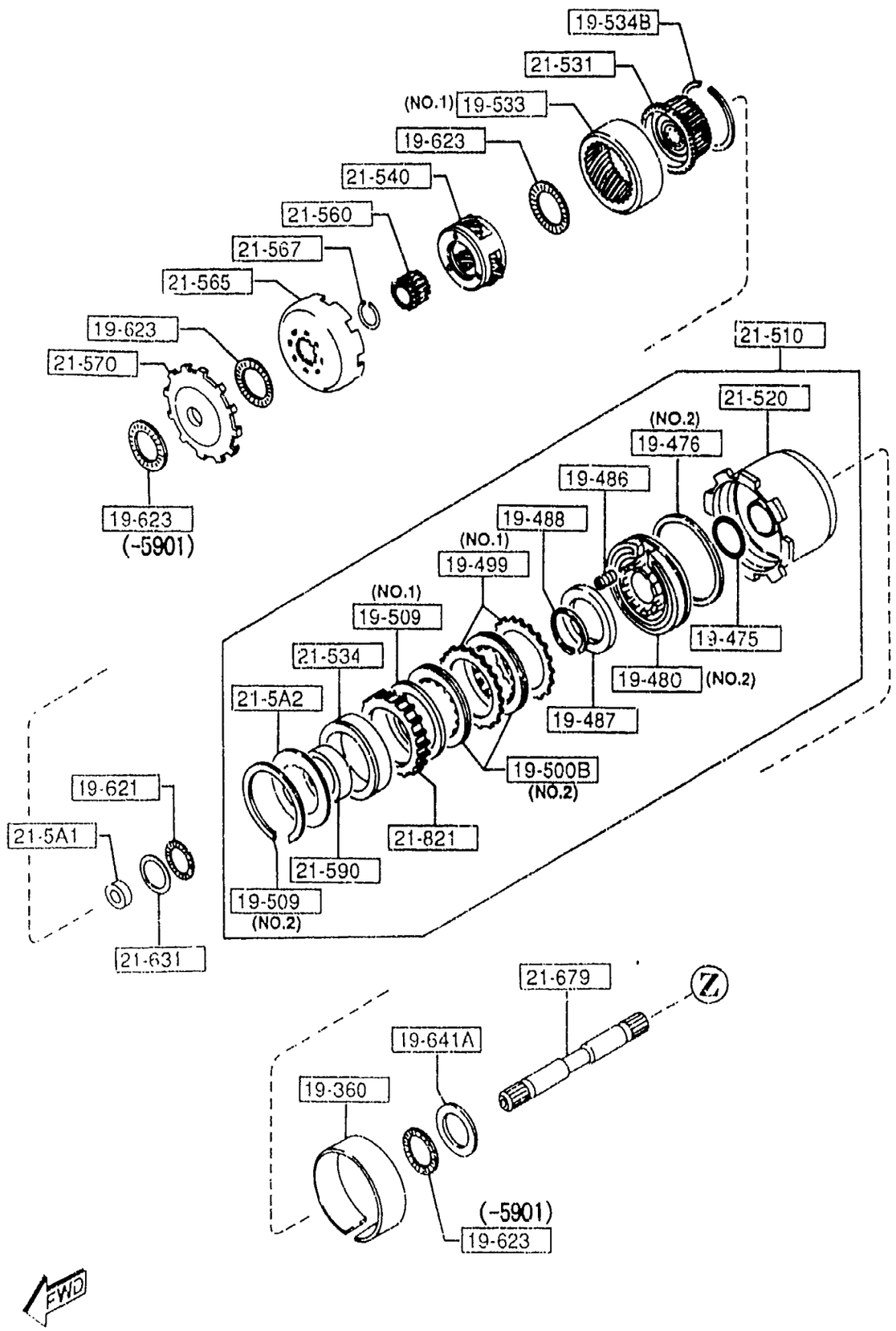
19-534B
21-531
(NO.1) 19-533
19-623
21-540
21-560
21-567
21-565
19-623
21-570
19-623
(-5901)
21-510
21-520
(NO.2)
19-476
19-486
19-488
(NO.1)
19-499
(NO.1)
19-509
21-534
21-5A2
19-475
19-480 (NO.2)
19-487
19-500B
(NO.2)
21-821
21-590
19-509
(NO.2)
19-621
21-5A1
21-631
21-679
19-641A
19-360
(-5901)
19-623
FWD





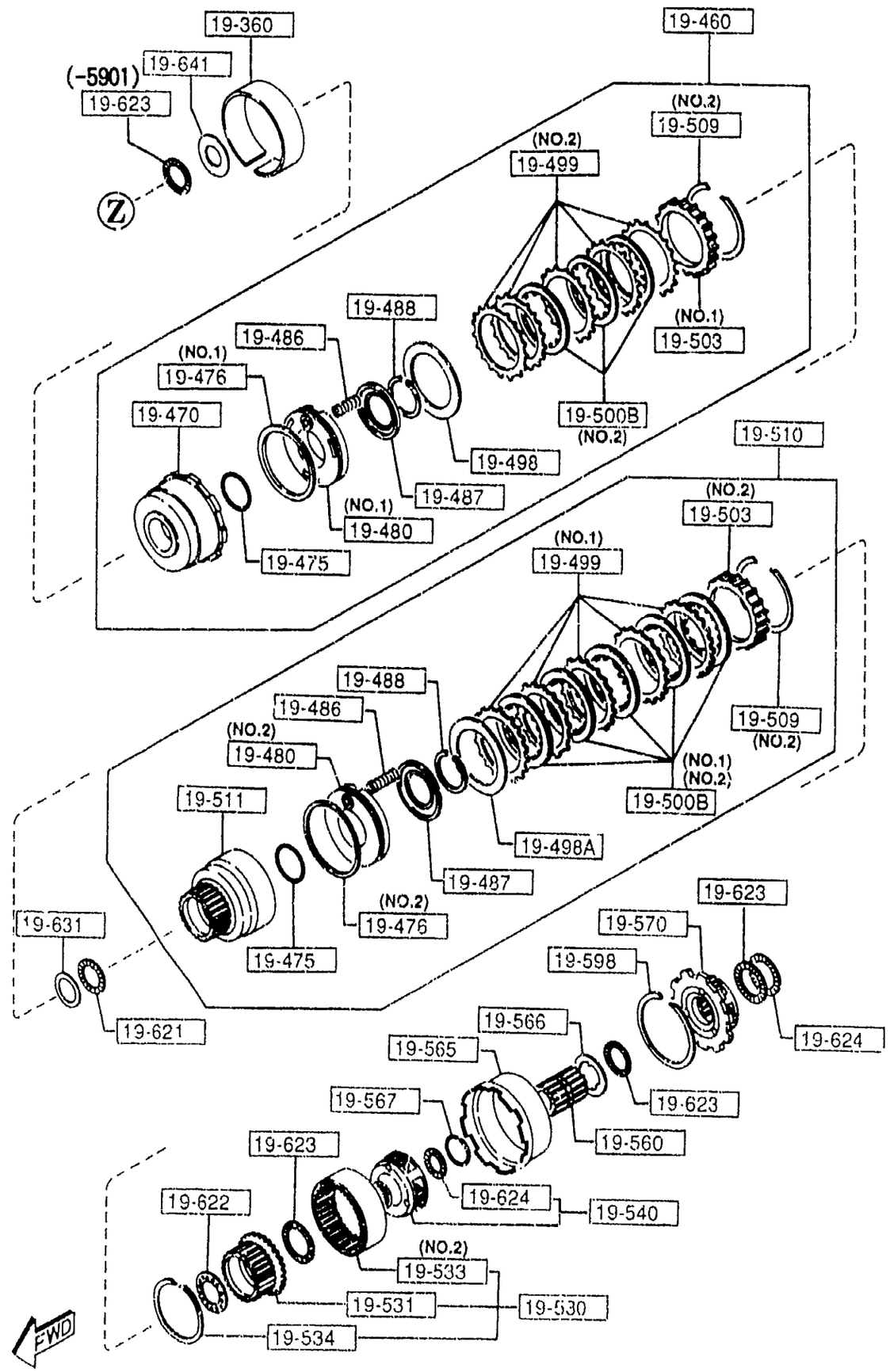
19-360
(-5901)
19-641
19-623
19-460
(NO.2)
19-509
(NO.2)
19-499
19-488
(NO.1)
19-503
19-486
(NO.1)
19-476
19-470
19-500B
(NO.2)
19-498
19-487
(NO.1)
19-480
19-475
19-510
(NO.2)
19-503
(NO.1)
19-499
19-488
19-486
(NO.2)
19-480
19-509
(NO.2)
(NO.1)
(NO.2)
19-500B
19-511
19-498A
19-487
(NO.2)
19-476
19-475
19-631
19-621
19-623
19-570
19-598
19-624
19-566
19-565
19-623
19-567
19-560
19-623
19-624
19-540
19-622
(NO.2)
19-533
19-531
19-530
19-534
FWD

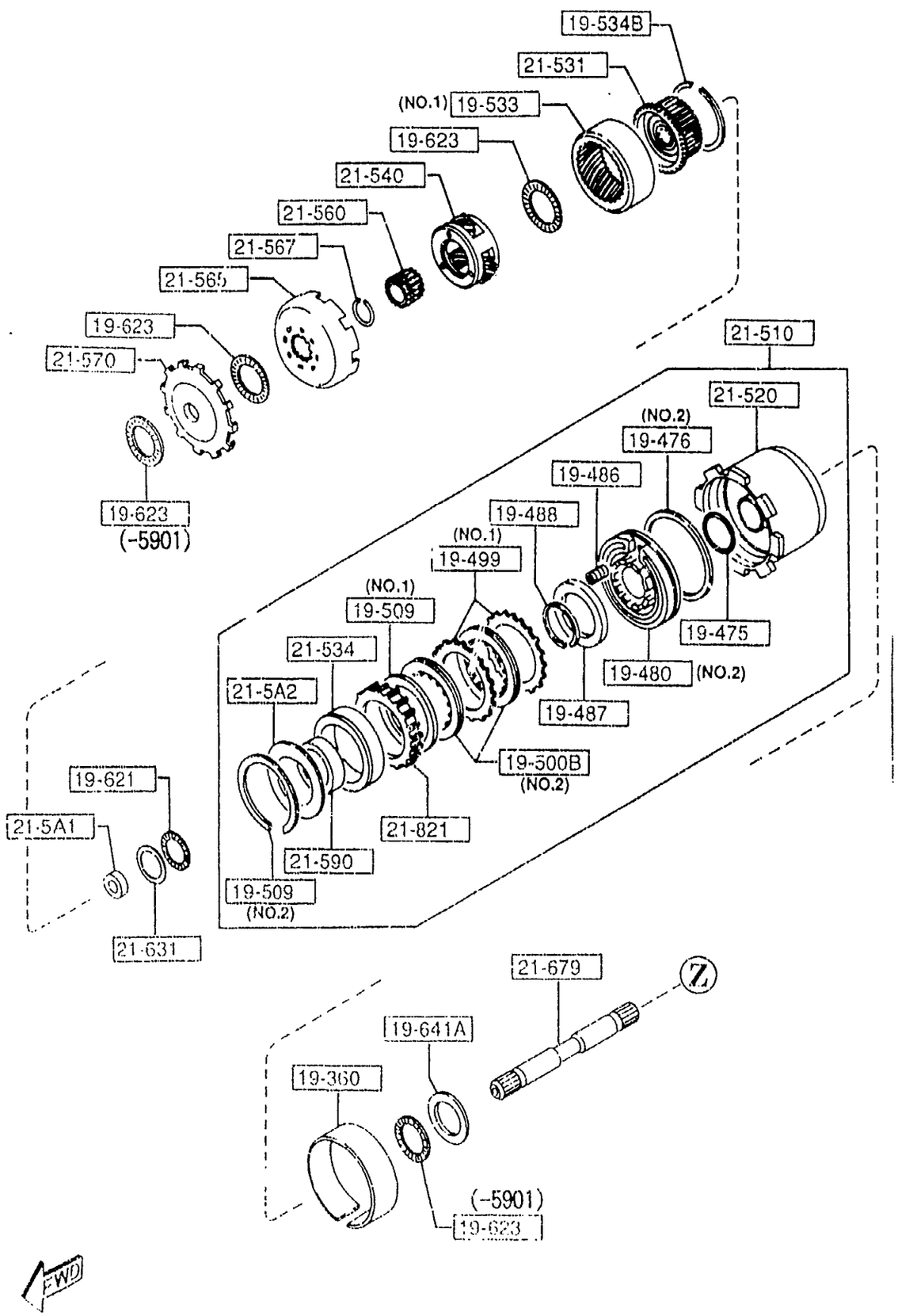






| PART NO. | QTY | MODEL/RESTRICTION | MODEL/RESTRICTION | MODEL/RESTRICTION | FROM-TO |
|---|---|---|---|---|---|
| 19-360 | | BAND,BRAKE | | | |
| 0338-19-360B | 2 | | | | |
| 19-460 | | CLUTCH,FRONT | | | |
| N451-19-460 | 1 | | | | |
| 19-470 | | DRUM,CLUTCH | | | |
| N451-19-470 | 1 | | | | |
| 19-475 | | SEAL,'O'RING | | | |
| 0338-19-475 | 3 | | | | |
| 19-476 | | SEAL,LATHE CUT | | | |
| BV01-19-476 | 1 | (ILLUST. NO.1) | | | |
| 0338-19-476 | 2 | (ILLUST. NO.2) | | | |
| 19-480 | | PISTON,CLUTCH | | | |
| BV01-19-480 | 1 | (ILLUST. NO.1) | | | |
| 0338-19-480 | 2 | (ILLUST. NO.2) | | | |
| 19-486 | | SPRING,PISTON RETURN | | | |
| 0338-19-486 | 25 | | | | |
| 19-487 | | RETAINER,SPRING | | | |
| 0338-19-487 | 3 | | | | |
| 19-488 | | RING,SNAP | | | |
| 0338-19-488 | 3 | | | | |
| 19-498 | | PLATE,DISHED | | | |
| 0338-19-498 | 1 | | | | |
| 19-498A | | PLATE,DISHED | | | |
| BU17-19-498 | 1 | | | | |
| 19-499 | | PLATE,DRIVEN | | | |
| FT01-19-499 | 7 | (ILLUST. NO.1) | | | |
| 0338-19-499 | 5 | (ILLUST. NO.2) | | | |
| 19-500B | | PLATE,DRIVEN | | | |

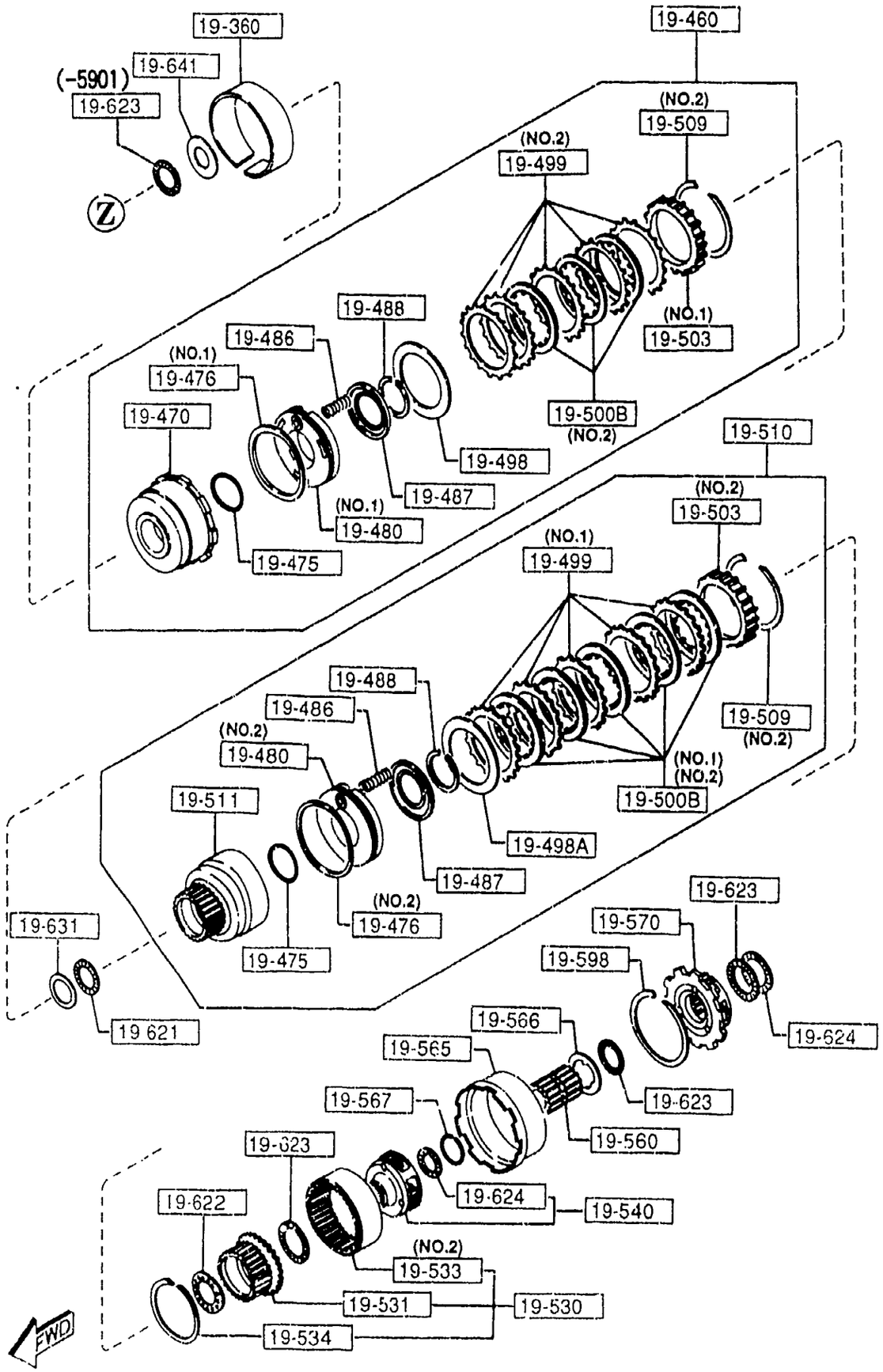






| PART NO. | QTY | MODEL/RESTRICTION | MODEL/RESTRICTION | MODEL/RESTRICTION | FROM-TO |
|---|---|---|---|---|---|
| CONT'D | | | | | |
| BU55-19-5J0 | 5 | SELECTIVE USE (ILLUST. NO.1) | | | |
| BU17-19-500A | 10 | SELECTIVE USE (ILLUST. NO.2) | | | |
| +----------+ | | | | | |
| \| 19-503 \| | | PLATE,RETAINING | | | |
| +----------+ | | | | | |
| 0338-19-503 | 1 | T=10.2MM (ILLUST. NO.2) | | | |
| BU17-19-504 | 1 | T=9.4MM (ILLUST. NO.2) | | | |
| BU17-19-505 | 1 | T=9.6MM (ILLUST. NO.2) | | | |
| N451-19-505 | 1 | T=6.4MM (ILLUST. NO.1) | | | |
| BU17-19-506 | 1 | T=9.8MM (ILLUST. NO.2) | | | |
| BV02-19-506 | 1 | T=6.6MM (ILLUST. NO.1) | | | |
| BU17-19-507 | 1 | T=10MM (ILLUST. NO.2) | | | |
| BV02-19-507 | 1 | T=6.8MM (ILLUST. NO.1) | | | |
| 3959-19-507 | 1 | T=5.8MM (ILLUST. NO.1) | | | |
| BU17-19-508 | 1 | T=10.2MM (ILLUST. NO.2) | | | |
| BV02-19-508 | 1 | T=7.0MM (ILLUST. NO.1) | | | |
| 3959-19-508 | 1 | T=6.0MM (ILLUST. NO.1) | | | |
| BU17-19-509 | 1 | T=10.4MM (ILLUST. NO.2) | | | |
| 3959-19-509 | 1 | T=6.2MM (ILLUST. NO.1) | | | |
| +----------+ | | | | | |
| \| 19-509 \| | | RING,SNAP | | | |
| +----------+ | | | | | |
| BV01-19-509 | 1 | (ILLUST. NO.1) | | | |
| 0338-19-509 | 3 | T=2.0MM (ILLUST. NO.2) | | | |
| +----------+ | | | | | |
| \| 19-510 \| | | CLUTCH,REAR | | | |
| +----------+ | | | | | |
| BU17-19-510A | 1 | | | | |
| +----------+ | | | | | |
| \| 19-511 \| | | DRUM,REAR CLUTCH | | | |
| +----------+ | | | | | |
| 1758-19-511A | 1 | | | | |

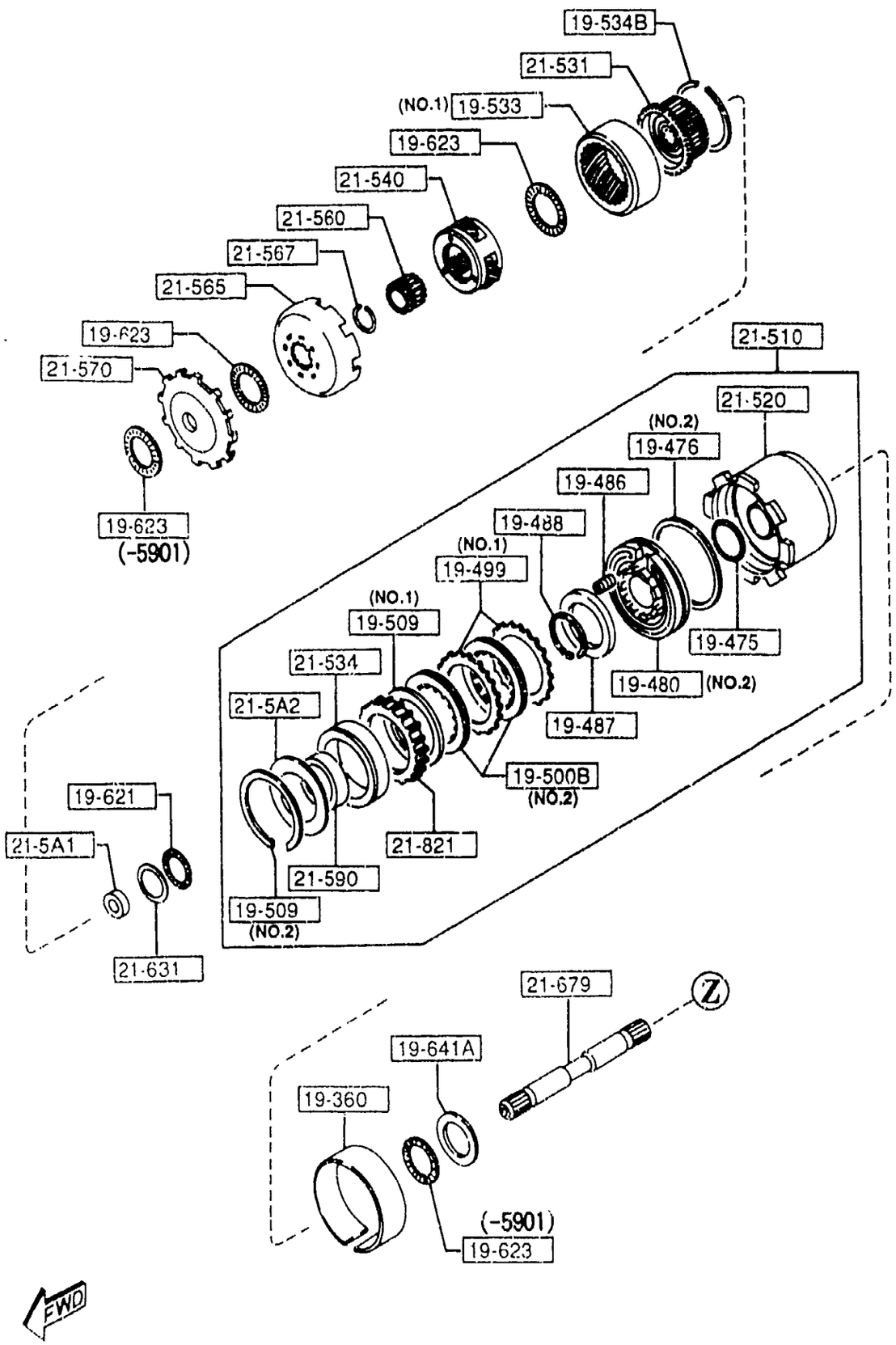






| PART NO. | QTY | MODEL/RESTRICTION | MODEL/RESTRICTION | MODEL/RESTRICTION | FROM-TO |
|---|---|---|---|---|---|
| 19-530 | | HUB,REAR CLUTCH | | | |
| 0338-19-530 | 1 | | | | |
| 19-531 | | HUB,REAR CLUTCH | | | |
| 0338-19-531 | 1 | | | | |
| 19-533 | | GEAR,INTERNAL | | | |
| BV01-19-533 | 1 | (ILLUST. NO.1) | | | |
| 0338-19-533A | 1 | (ILLUST. NO.2) | | | |
| 19-534 | | RING,SNAP | | | |
| 0338-19-534 | 1 | | | | |
| 19-534B | | RING,SNAP | | | |
| BU03-19-534 | 1 | | | | |
| 19-540 | | CARRIER,FRONT | | | |
| 0338-19-540 | 1 | | | | |
| 19-560 | | GEAR,SUN | | | |
| 0338-19-560 | 1 | | | | |
| 19-565 | | SHELL,CONNECTING | | | |
| BU27-19-565 | 1 | | | | |
| 19-566 | | RACE,SHELL BEARING | | | |
| 0338-19-566 | 1 | ('95 MODEL) | | | |
| 19-567 | | RING,SNAP | | | |
| 0338-19-567 | 1 | | | | |
| 19-570 | | CARRIER,REAR | | | |
| 0338-19-570 | 1 | | | | |
| 19-598 | | RING,SNAP | | | |
| 0338-19-598 | 1 | | | | |
| 19-621 | | BEARING,NEEDLE | | | |
| 0338-19-621 | 2 | | | | |

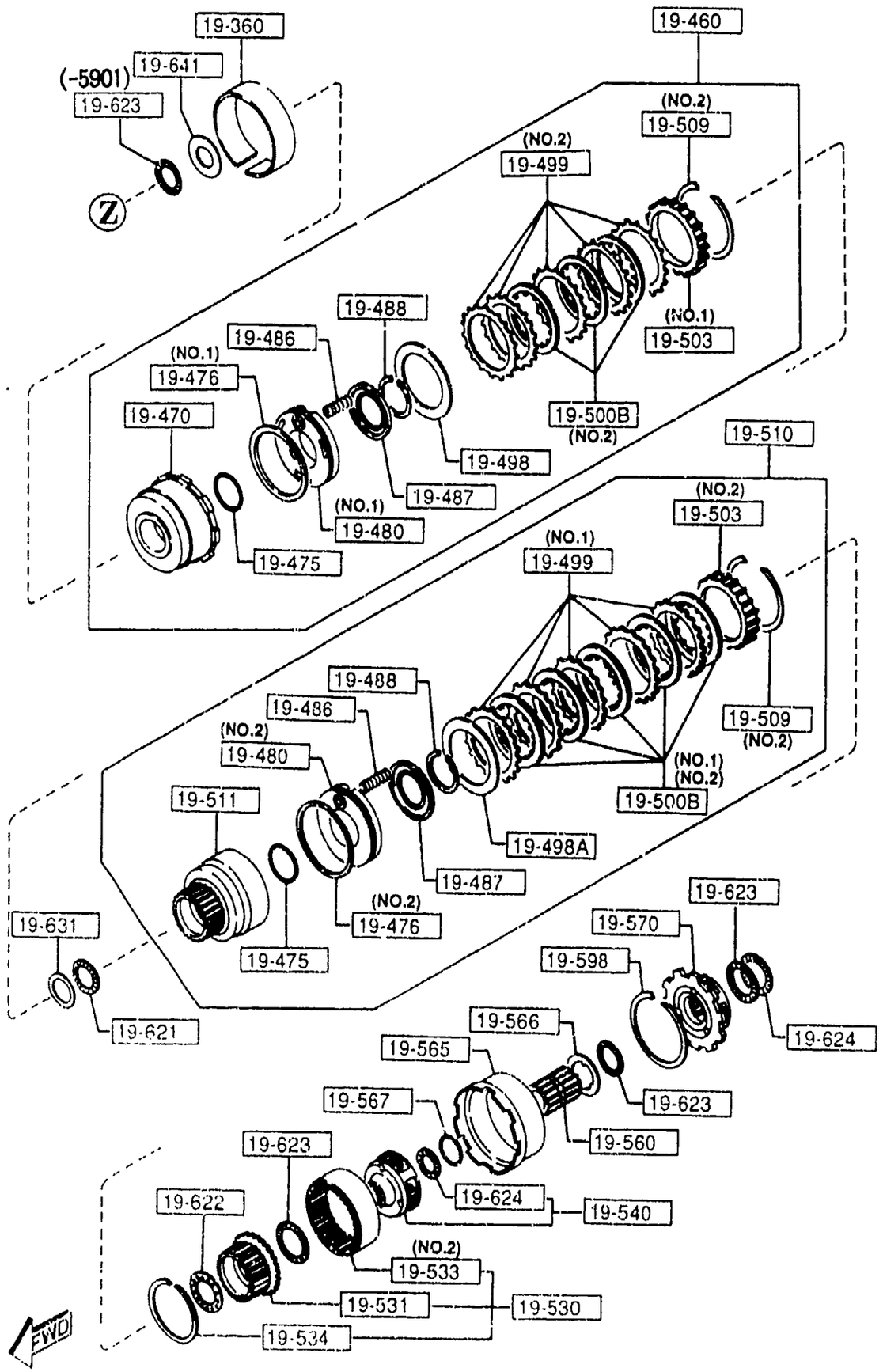




| PART NO. | QTY | MODEL/RESTRICTION | MODEL/RESTRICTION | MODEL/RESTRICTION | FROM-TO |
|---|---|---|---|---|---|
| +---------+ | | | | | |
| \| 19-622 \| | | BEARING,NEEDLE | | | |
| +---------+ | | | | | |
| BU91-19-622 | 1 | D=34.7MM | | | |
| FT01-19-622 | 1 | D=33.8MM | | | |
| +---------+ | | | | | |
| \| 19-623 \| | | BEARING,NEEDLE | | | |
| +---------+ | | | | | |
| 0338-19-623A | 8 | | | | -5901 |
| 0338-19-623A | 5 | | | | 5901- |
| +---------+ | | | | | |
| \| 19-624 \| | | BEARING,NEEDLE | | | |
| +---------+ | | | | | |
| 0338-19-624 | 2 | | | | |
| +---------+ | | | | | |
| \| 19-631 \| | | RACE,BRG.PUMP COVER | | | |
| +---------+ | | | | | |
| 0338-19-631 | 1 | T=1.2MM | | | |
| 0338-19-632 | 1 | T=1.4MM | | | |
| 0338-19-633 | 1 | T=1.6MM | | | |
| 0338-19-634 | 1 | T=1.8MM | | | |
| 0338-19-635 | 1 | T=2.0MM | | | |
| 0338-19-636 | 1 | T=2.2MM | | | |
| +---------+ | | | | | |
| \| 19-641 \| | | WASHER,FRONT CLUTCH | | | |
| +---------+ | | | | | |
| BV01-19-6C1 | 1 | T=0.8MM | | | |
| BV01-19-6C2 | 1 | T=1MM | | | |
| BV01-19-6C3 | 1 | T=1.2MM | | | |
| BV01-19-6C4 | 1 | T=1.4MM | | | |
| BV01-19-6C5 | 1 | T=1.6MM | | | |
| BV01-19-6C6 | 1 | T=1.8MM | | | |
| BV01-19-6C7 | 1 | T=2MM | | | |
| BV01-19-6C8 | 1 | T=2.2MM | | | |

5901 NA3** -702989

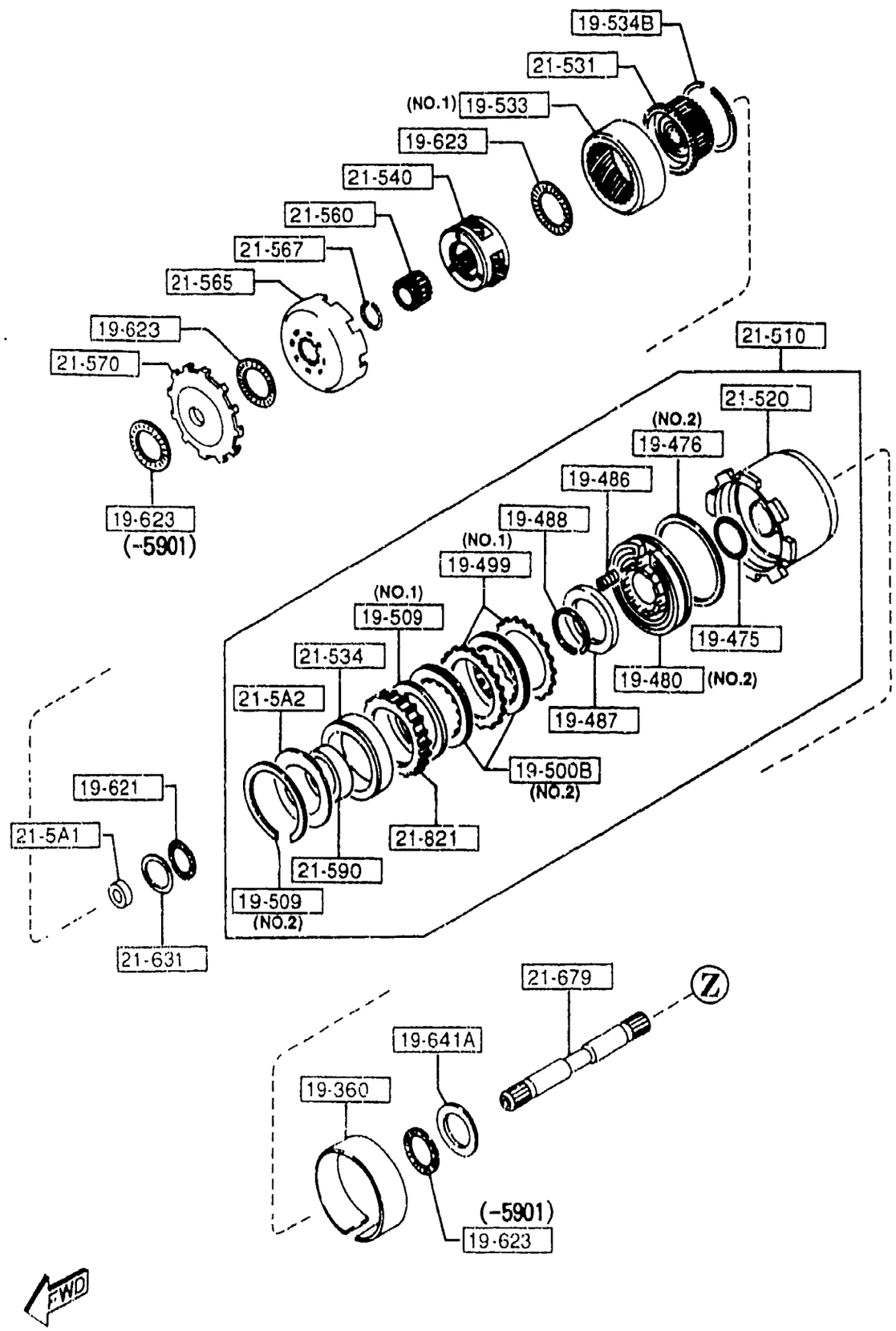




| PART NO. | QTY | MODEL/RESTRICTION | MODEL/RESTRICTION | MODEL/RESTRICTION | FROM-TO |
|---|---|---|---|---|---|
| 19-641A | | WASHER | | | |
| BV03-19-6C1 | 1 | T=0.8MM | | | |
| BV03-19-6C2 | 1 | T=1MM | | | |
| BV03-19-6C3 | 1 | T=1.2MM | | | |
| BV03-19-6C4 | 1 | T=1.4MM | | | |
| BV03-19-6C5 | 1 | T=1.6MM | | | |
| BV03-19-6C6 | 1 | T=1.8MM | | | |
| BV03-19-6C7 | 1 | T=2MM | | | |
| BV03-19-6C8 | 1 | T=2.2MM | | | |
| 21-5A1 | | SLEEVE,SEAL-O.D.CARRIER | | | |
| BV01-21-5A1 | 1 | | | | |
| 21-5A2 | | RACE,SIDE-ONE WAY CLUTCH | | | |
| BV01-21-5A2 | 1 | T=0.6MM | | | |
| BV01-21-5A3 | 1 | T=0.8MM | | | |
| BV01-21-5A4 | 1 | T=1MM | | | |
| BV01-21-5A5 | 1 | T=1.2MM | | | |
| BV01-21-535 | 1 | T=0.4MM | | | |
| 21-510 | | CLUTCH,DIRECT | | | |
| BV01-21-510B | 1 | | | | |
| 21-520 | | DRUM,DIRECT | | | |
| BV01-21-530C | 1 | | | | |
| 21-531 | | HUB,O/DRIVE CLUTCH | | | |
| BV01-21-536 | 1 | | | | |
| 21-534 | | RACE,OUTER-ONE WAY CLUTCH | | | |
| BV01-21-534 | 1 | | | | |

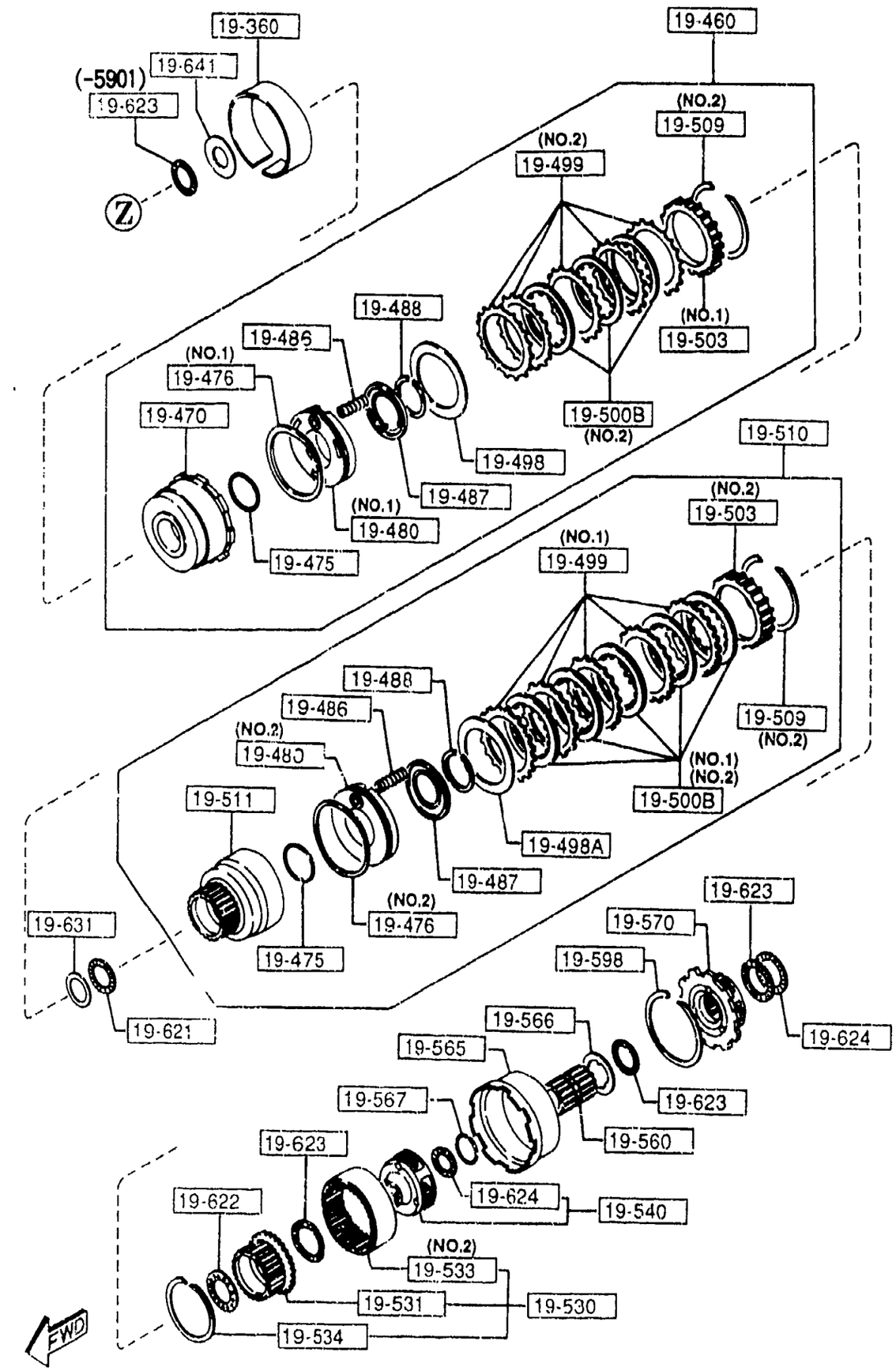


1930 -6 * AUTOMATIC TRANSMISSION CLUTCHES & PLANETARY GEARS

| PART NO. | QTY | MODEL/RESTRICTION | MODEL/RESTRICTION | MODEL/RESTRICTION | FROM-TO |
|---|---|---|---|---|---|
| 21-540 | | CARRIER,OVER DRIVE | | | |
| BV01-21-540B | 1 | | | | |
| 21-560 | | GEAR,OVER DRIVE | | | |
| BV01-21-560 | 1 | | | | |
| 21-565 | | CONNECTING,SHELL | | | |
| BU03-21-565 | 1 | | | | |
| 21-567 | | RING,SNAP | | | |
| BU03-21-567 | 1 | | | | |
| 21-570 | | SUPPORT,CENTER | | | |
| BV01-21-570A | 1 | | | | |
| 21-590 | | CLUTCH,ONE WAY | | | |
| BV01-21-533 | 1 | | | | |
| 21-631 | | RACE,BRG.HUB CLUTCH | | | |
| BU01-21-631 | 1 | L=1.2MM | | | |
| BU01-21-632 | 1 | L=1.4MM | | | |
| BU01-21-633 | 1 | L=1.6MM | | | |
| BU01-21-634 | 1 | L=1.8MM | | | |
| BU01-21-635 | 1 | L=2.0MM | | | |
| BU01-21-636 | 1 | L=2.2MM | | | |
| 21-679 | | SHAFT,INTERMEDIATE | | | |
| BU01-21-679 | 1 | | | | |
| 21-821 | | PLATE,RETAINING | | | |
| BV01-21-821A | 1 | | | | |

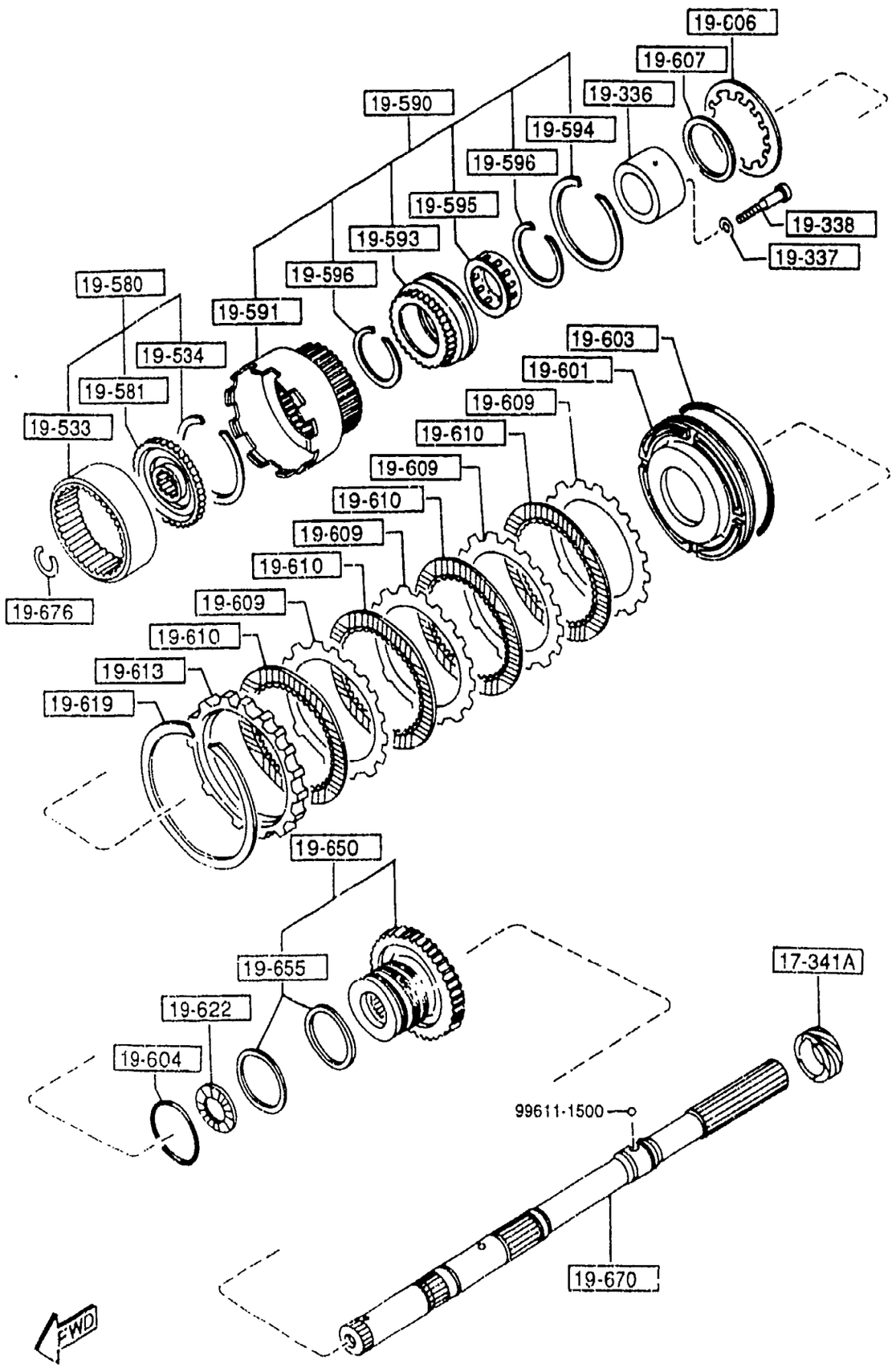






| PART NO. | QTY | MODEL/RESTRICTION | MODEL/RESTRICTION | MODEL/RESTRICTION | FROM-TO |
|---|---|---|---|---|---|
| 17-341A<br>1281-17-341 | 1 | GEAR,SPEEDO.DRIVE | | | |
| 19-336<br>0338-19-336 | 1 | RACE,INNER | | | |
| 19-337<br>0338-19-337 | 8 | WASHER,PLAIN | | | |
| 19-338<br>0338-19-338 | 8 | BOLT | | | |
| 19-533<br>0338-19-533A | 1 | GEAR,INTERNAL | | | |
| 19-534<br>0338-19-534 | 1 | RING,SNAP | | | |
| 19-580<br>0338-19-580 | 1 | FLANGE | | | |
| 19-581<br>0338-19-581 | 1 | FLANGE,DRIVE | | | |
| 19-590<br>0338-19-590 | 1 | DRUM,CONNECTING | | | |
| 19-591<br>0338-19-591 | 1 | DRUM,CONNECTING | | | |
| 19-593<br>0338-19-593 | 1 | RACE,OUTER | | | |
| 19-594<br>0338-19-594 | 1 | RING,SNAP | | | |
| 19-595<br>0338-19-595 | 1 | CLUTCH,ONE WAY | | | |
| 19-596<br>0338-19-596 | 2 | RING,SNAP | | | |

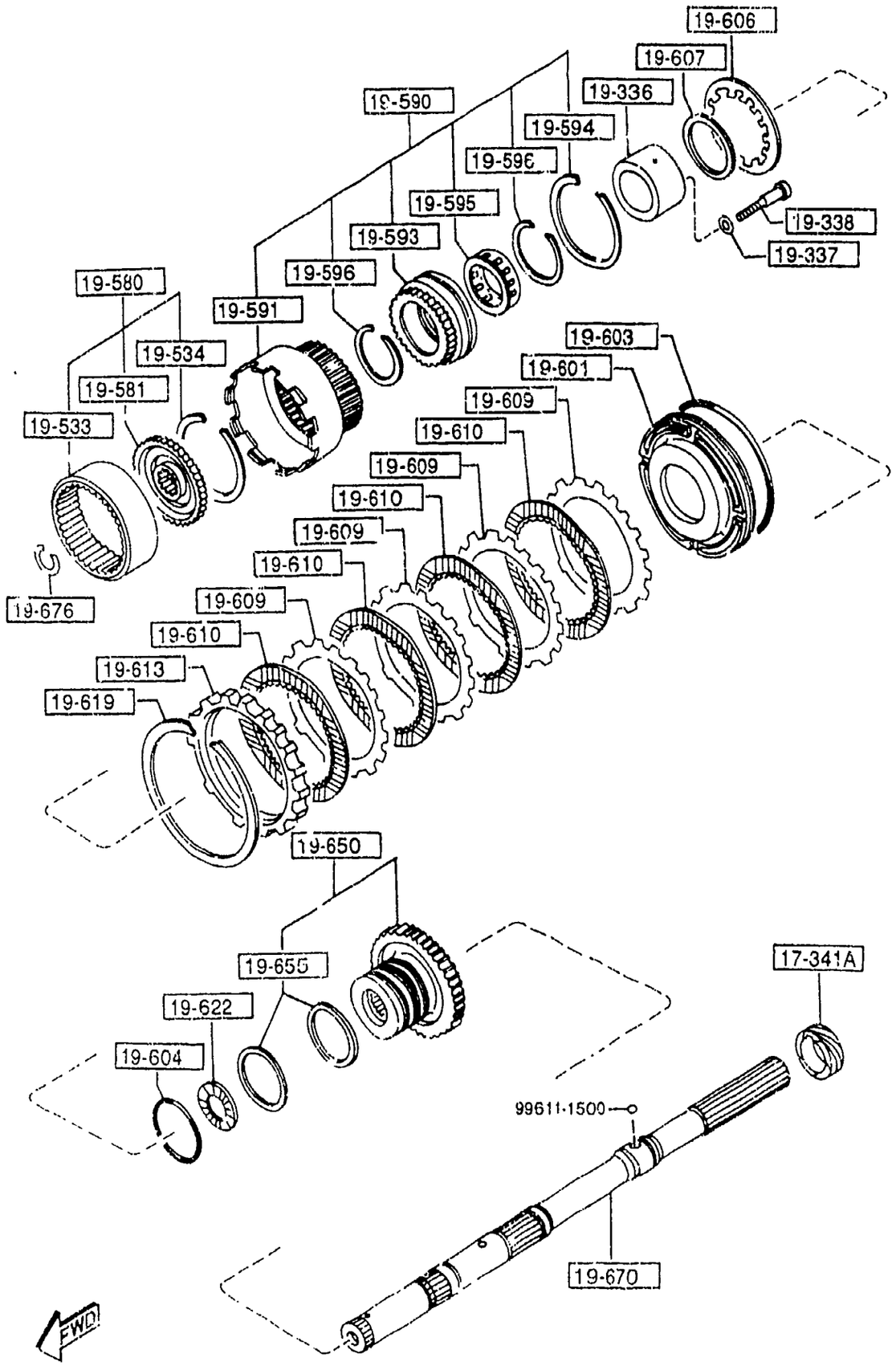






| PART NO. | QTY | MODEL/RESTRICTION | MODEL/RESTRICTION | MODEL/RESTRICTION | FROM-TO |
|---|---|---|---|---|---|
| 19-601 | | PISTON,LOW & REVERSE | | | |
| BT08-19-600 | 1 | | | | |
| 19-603 | | SEAL,PISTON | | | |
| 0338-19-603 | 1 | | | | |
| 19-604 | | SEAL,'O'RING | | | |
| 0338-19-604 | 1 | | | | |
| 19-606 | | SPRING,PISTON | | | |
| 0338-19-606 | 1 | | | | |
| 19-607 | | RING,SNAP | | | |
| 0338-19-607 | 1 | | | | |
| 19-609 | | PLATE,DRIVEN | | | |
| 0338-19-609 | 4 | | | | |
| 19-610 | | PLATE,DRIVE | | | |
| BU17-19-610 | 4 | | | | |
| 19-613 | | PLATE,RETAINING | | | |
| 0338-19-613A | 1 | T=11.8MM | | | |
| 0338-19-614A | 1 | T=12MM | | | |
| 0338-19-615A | 1 | T=12.2MM | | | |
| 0338-19-616A | 1 | T=12.4MM | | | |
| 0338-19-617A | 1 | T=12.6MM | | | |
| 0338-19-618A | 1 | T=12.8MM | | | |
| 19-619 | | RING,SNAP | | | |
| 0338-19-619 | 1 | | | | |
| 19-622 | | BEARING,NEEDLE | | | |
| BU91-19-622 | 1 | D=34.7MM | | | |
| FT01-19-622 | 1 | D=33.8MM | | | |

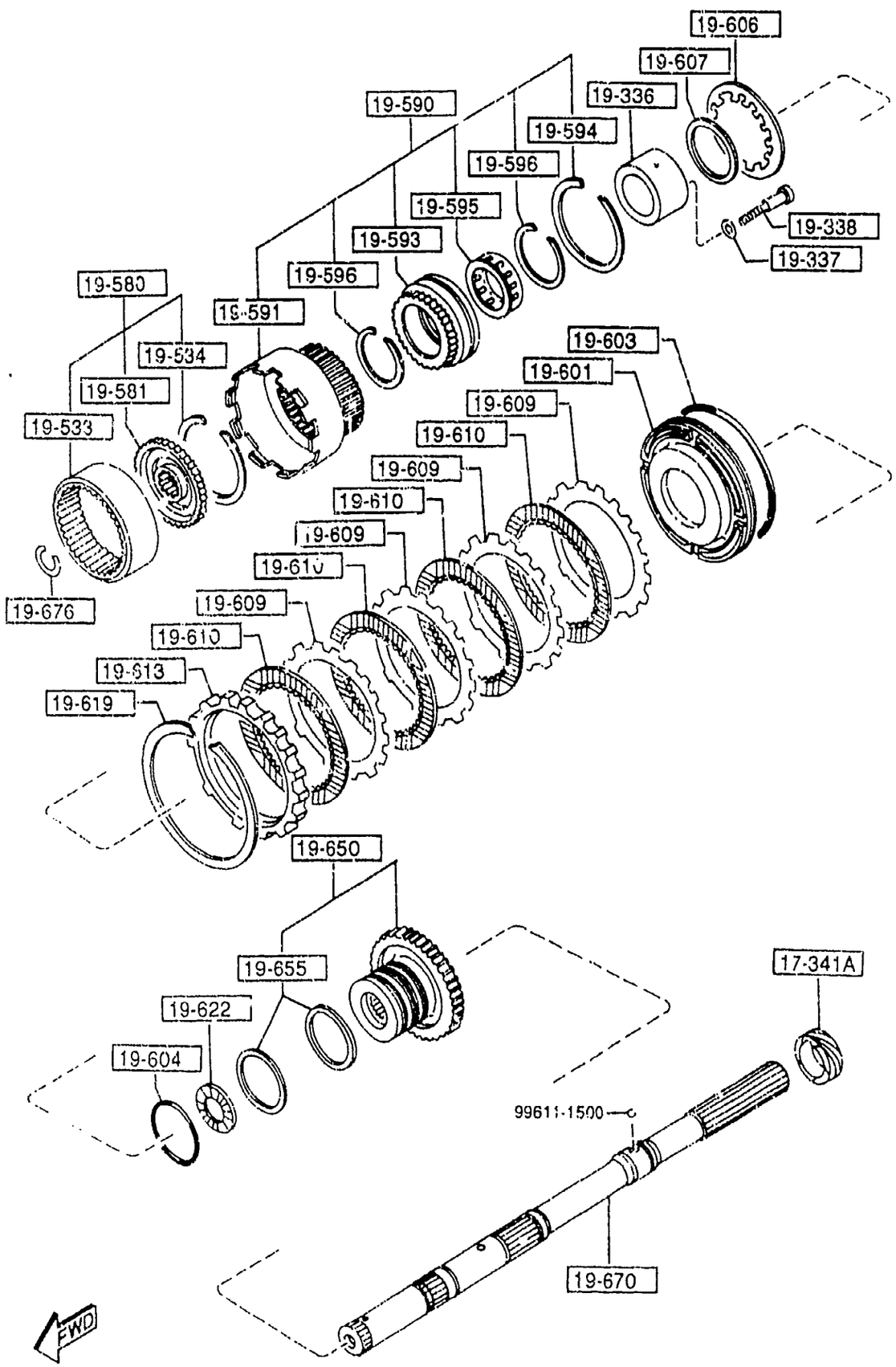


1940 -3 * AUTOMATIC TRANSMISSION GOVERNOR, LOW & REVERSE PISTON

| PART NO. | QTY | MODEL/RESTRICTION | MODEL/RESTRICTION | MODEL/RESTRICTION | FROM-TO |
|---|---|---|---|---|---|
| 19-650 | | DISTRIBUTOR,OIL | | | |
| BV01-19-650 | 1 | | | | |
| 19-655 | | RING,SEAL | | | |
| BV01-19-655 | 2 | | | | |
| 19-670 | | SHAFT | | | |
| BU55-19-670 | 1 | | | | |
| 19-676 | | RING | | | |
| 0338-19-676 | 1 | | | | |

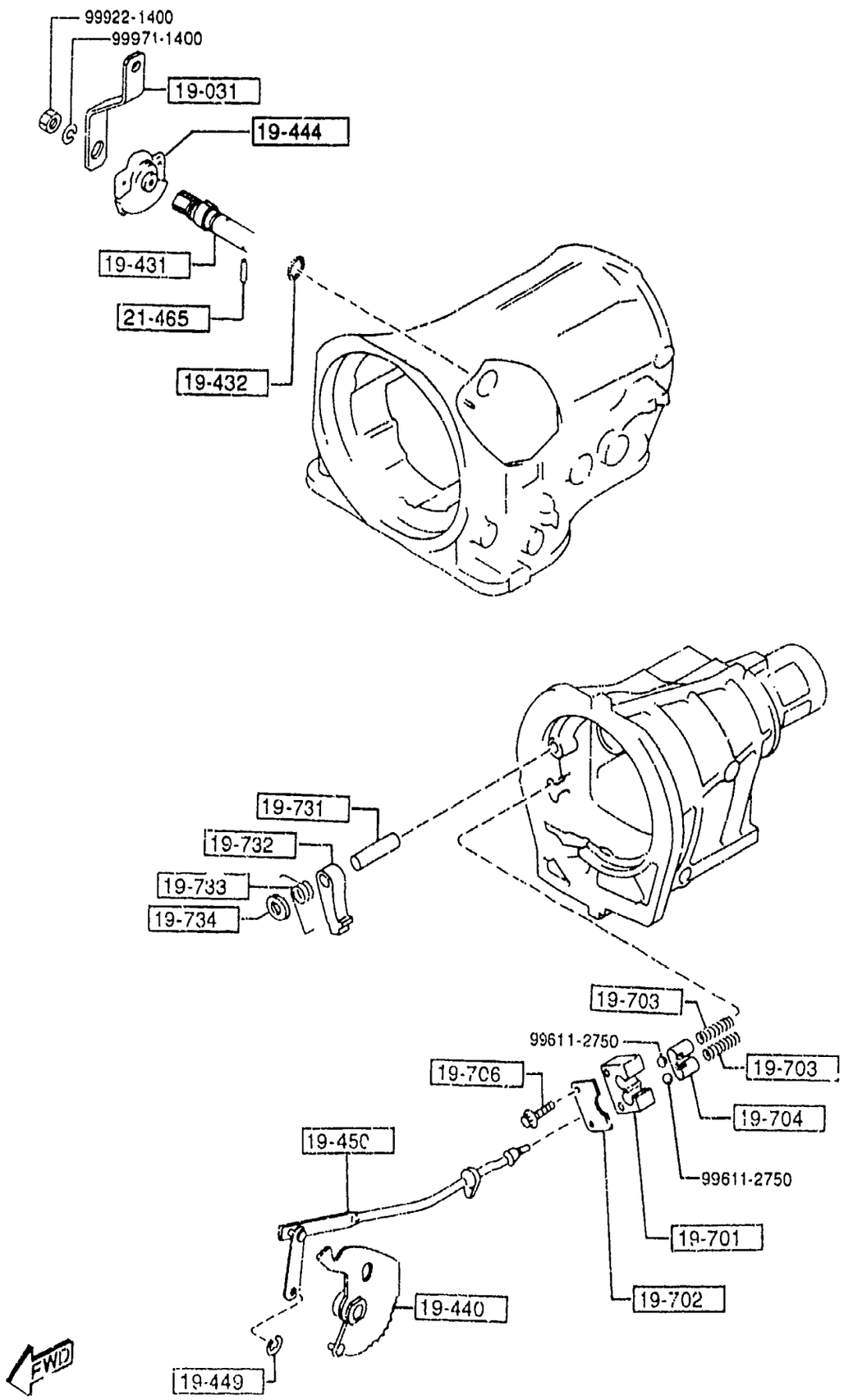




| PART NO. | QTY | MODEL/RESTRICTION | MODEL/RESTRICTION | MODEL/RESTRICTION | FROM-TO |
|---|---|---|---|---|---|
| 19-031 | | LEVER,SELECT | | | |
| BU55-19-031 | 1 | | | | |
| 19-431 | | SHAFT,MANUAL | | | |
| BU67-19-431 | 1 | | | | |
| 19-432 | | RING,'O' | | | |
| 0338-19-432 | 1 | | | | |
| 19-440 | | PLATE,MANUAL | | | |
| BU56-19-440 | 1 | | | | |
| 19-444 | | SWITCH,INHIBITOR | | | |
| N451-19-444 | 1 | | | | |
| 19-449 | | RING,SNAP | | | |
| 0338-19-449 | 1 | | | | |
| 19-450 | | ROD,PARKING | | | |
| BU17-19-450 | 1 | | | | |
| 19-701 | | SUPPORTER,ACTUATOR | | | |
| BU17-19-701 | 1 | | | | |
| 19-702 | | PLATE,RETAINING | | | |
| 0338-19-702A | 1 | | | | |
| 19-703 | | SPRING,BALL PARK | | | |
| BU17-19-703 | 2 | | | | |
| 19-704 | | RETAINER | | | |
| BU17-19-704 | 1 | | | | |
| 19-706 | | BOLT | | | |
| 0338-19-706 | 1 | | | | |
| 19-731 | | SHAFT,PARKING PAWL | | | |
| 0338-19-731 | 1 | | | | |
| 19-732 | | PAWL,PARKING | | | |
| BU17-19-732 | 1 | | | | |

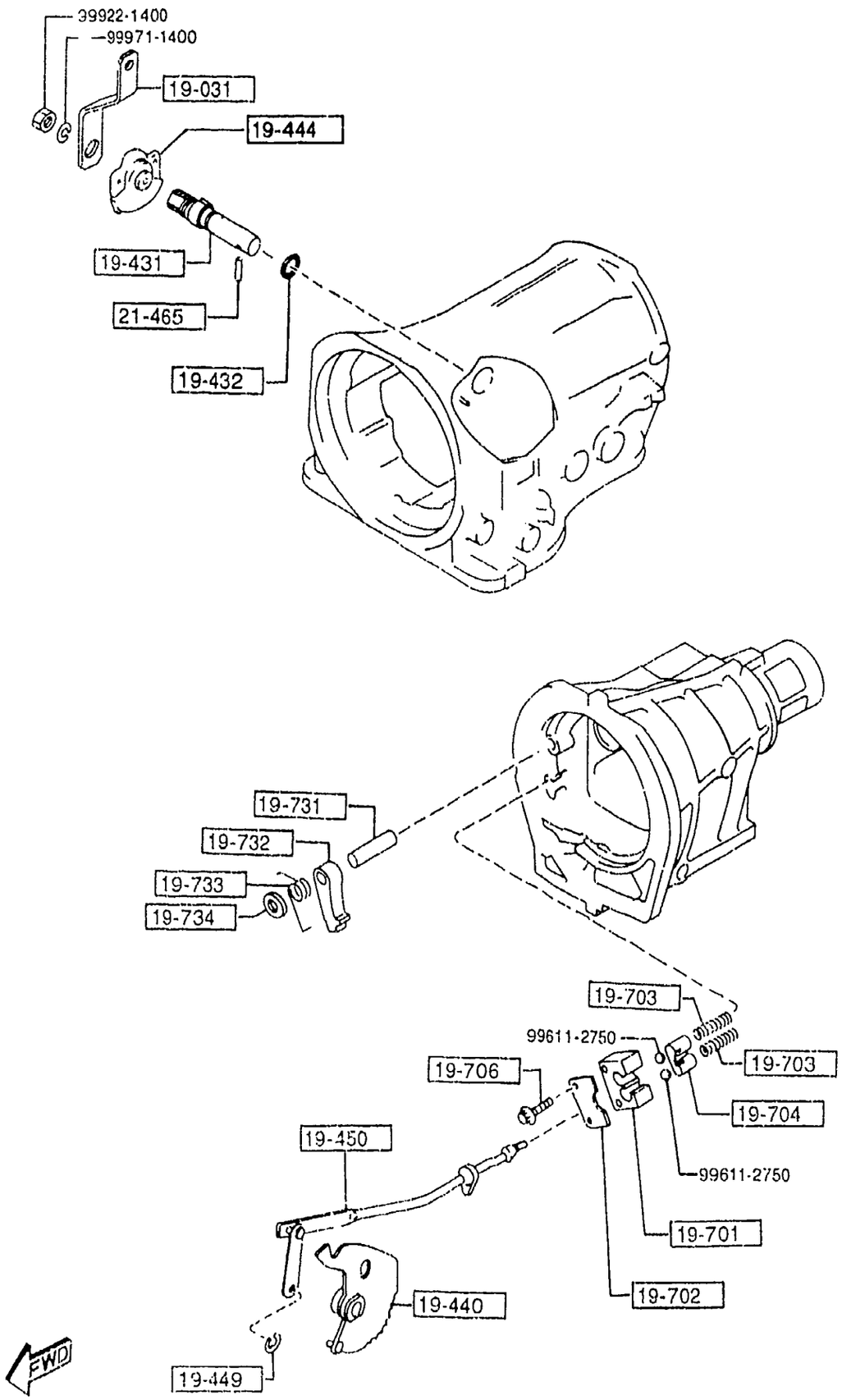




| PART NO. | QTY | MODEL/RESTRICTION | MODEL/RESTRICTION | MODEL/RESTRICTION | FROM-TO |
|---|---|---|---|---|---|
| +---------+ \| 19-733 \| +---------+ 0338-19-733C | 1 | SPRING,PAWL RETURN | | | |
| +---------+ \| 19-734 \| +---------+ 0338-19-734A | 1 | SPACER,DOWEL | | | |
| +---------+ \| 21-465 \| +---------+ BU67-21-465 | 1 | PIN,SPRING-PARKING ROD | | | |

22-900

| | | | |
|---|---|---|---|
| 1-SEAL, OIL | (1) | 17-SEAL, LATHE CUT | (1) |
| 2-GASKET, OIL PUMP | (1) | 18-SEAL, PISTON | (1) |
| 3-SEAL, OIL | (1) | 19-SEAL, "O" RING | (1) |
| 4-RING, SEAL | (4) | 20-RING, SEAL | (2) |
| 5-RING, SEAL | (2) | 21-GASKET, EXTENTION | (1) |
| 6-SEAL, CUT RING | (1) | 22-SEAL, "O" RING | (1) |
| 7-GASKET | (1) | 23-GASKET, OIL PAN | (1) |
| 8-SEAL, PISTON | (1) | 24-GASKET, DRUM SUPPORT | (1) |
| 9-SEAL, PISTON | (1) | 25-RING, "O" | (1) |
| 10-SEAL, PISTON | (1) | 26-RING, "O" | (1) |
| 11-SEAL, PISTON | (1) | 27-RING, "O" | (1) |
| 12-SEAL, LATHE CUT | (1) | 28-GASKET, O/DRIVE CASE | (1) |
| 13-RING, "O" | (1) | 29-RING, "O" | (2) |
| 14-RING, "O" | (1) | 30-RING, "O" | (1) |
| 15-RING, "O" | (1) | 31-RING, "O" | (4) |
| 16-SEAL, "O" RING | (3) | | |

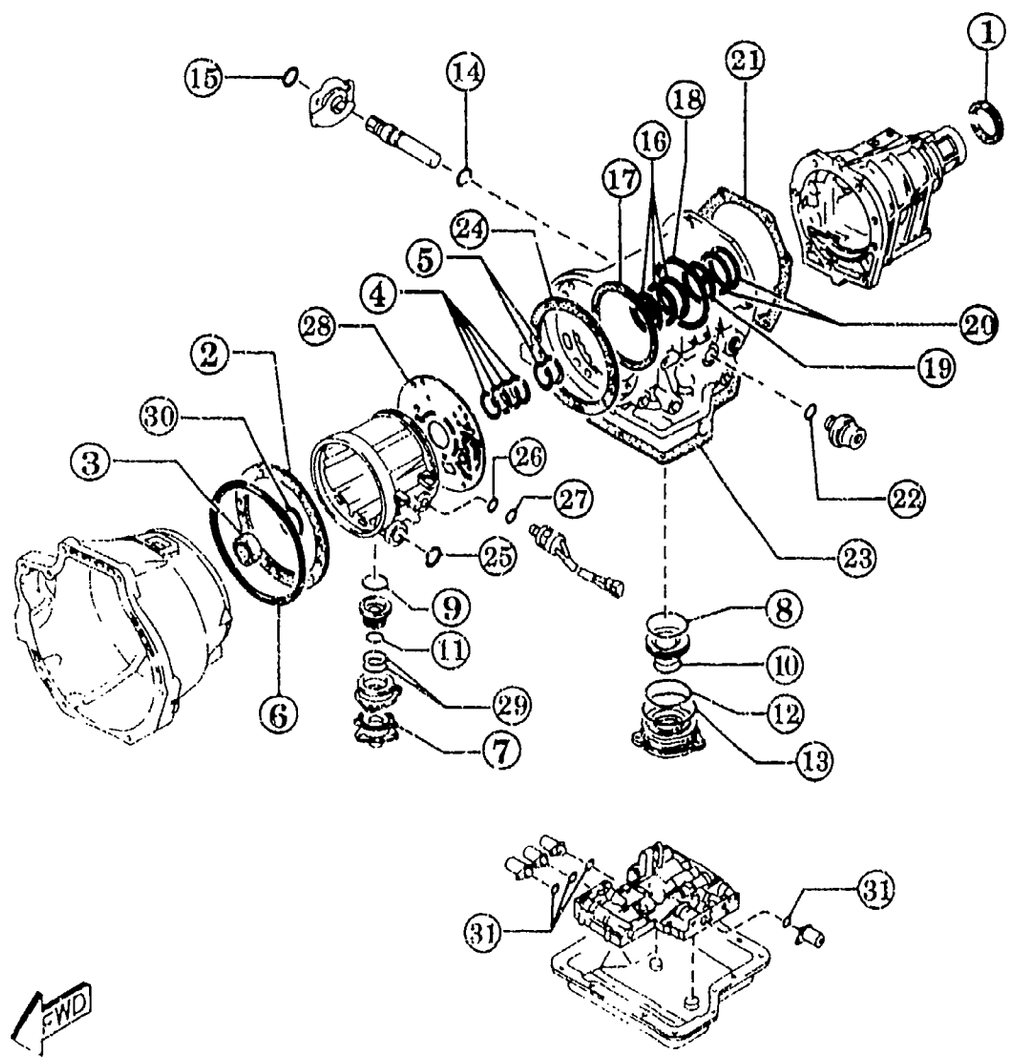


## 1960 -1 * AUTOMATIC TRANSMISSION GASKET & SEAL KIT

| PART NO. | QTY | MODEL/RESTRICTION | MODEL/RESTRICTION | MODEL/RESTRICTION | FROM-TO |
|---|---|---|---|---|---|
| +----------+ | | | | | |
| \| 22-900 \| | | GASKET & SEAL KIT | | | |
| +----------+ | | | | | |
| N451-22-900 | 1 | | | | |

# ENGINE

# CHASSIS

# ENGINE

# CHASSIS

# ENGINE

# CHASSIS

# ENGINE

# CHASSIS

# ENGINE

# CHASSIS

# ENGINE

# CHASSIS

# ENGINE

# CHASSIS

# ENGINE

# CHASSIS

# ENGINE

# CHASSIS

# ENGINE

# CHASSIS

# ENGINE

# CHASSIS

# ENGINE

# CHASSIS

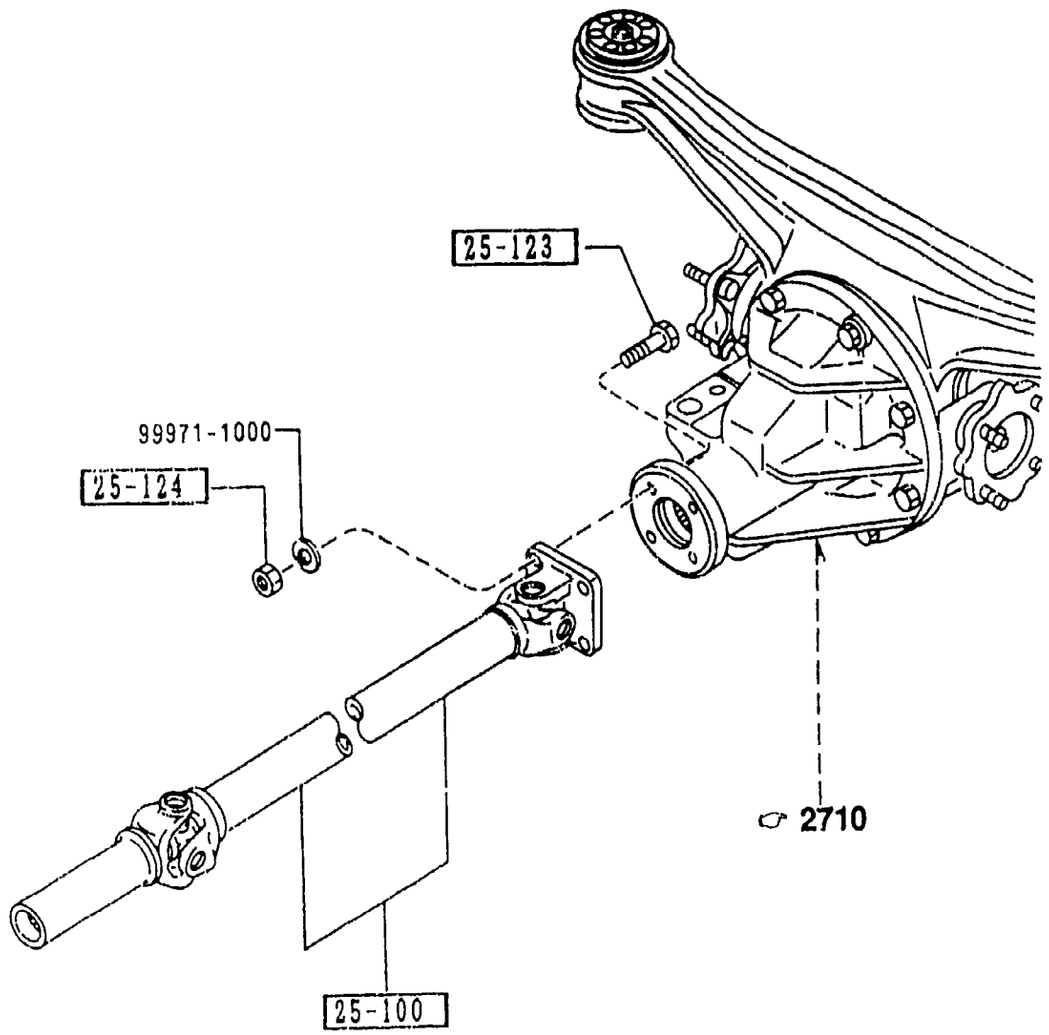

AUNA05

## 2505 -1 * REAR PROPELLER SHAFT

| PART NO. | QTY | MODEL/RESTRICTION | MODEL/RESTRICTION | MODEL/RESTRICTION | FROM-TO |
|---|---|---|---|---|---|
| 25-100 | | SHAFT,PROPELLER-FRT | | | |
| MF04-25-100 | 1 | | | | |
| 25-123 | | BOLT | | | |
| P011-25-123 | 4 | | | | |
| 25-124 | | NUT | | | |
| 1368-25-124 | 4 | | | | |

(−5201)

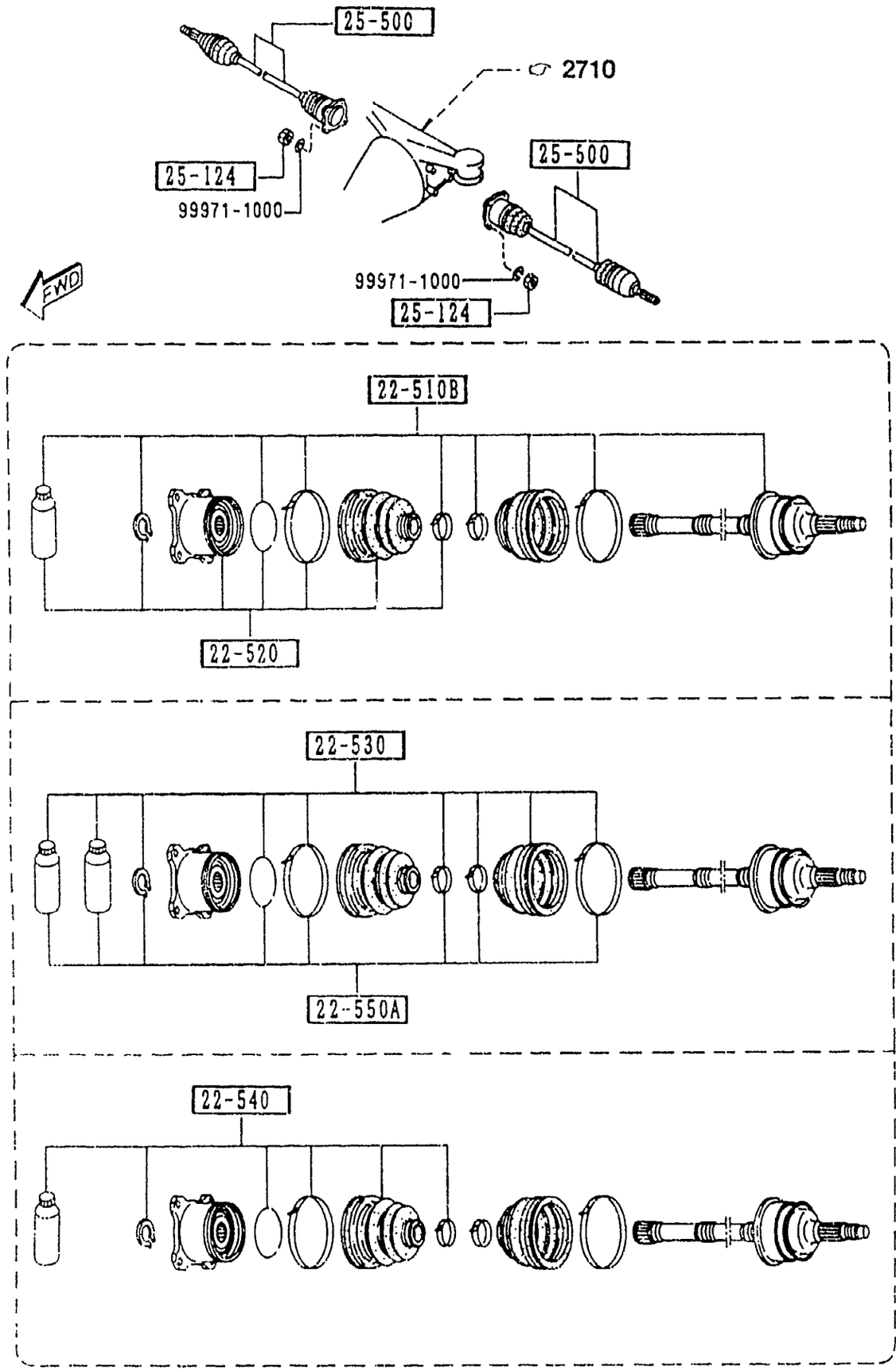


AUNA05



(5201−)

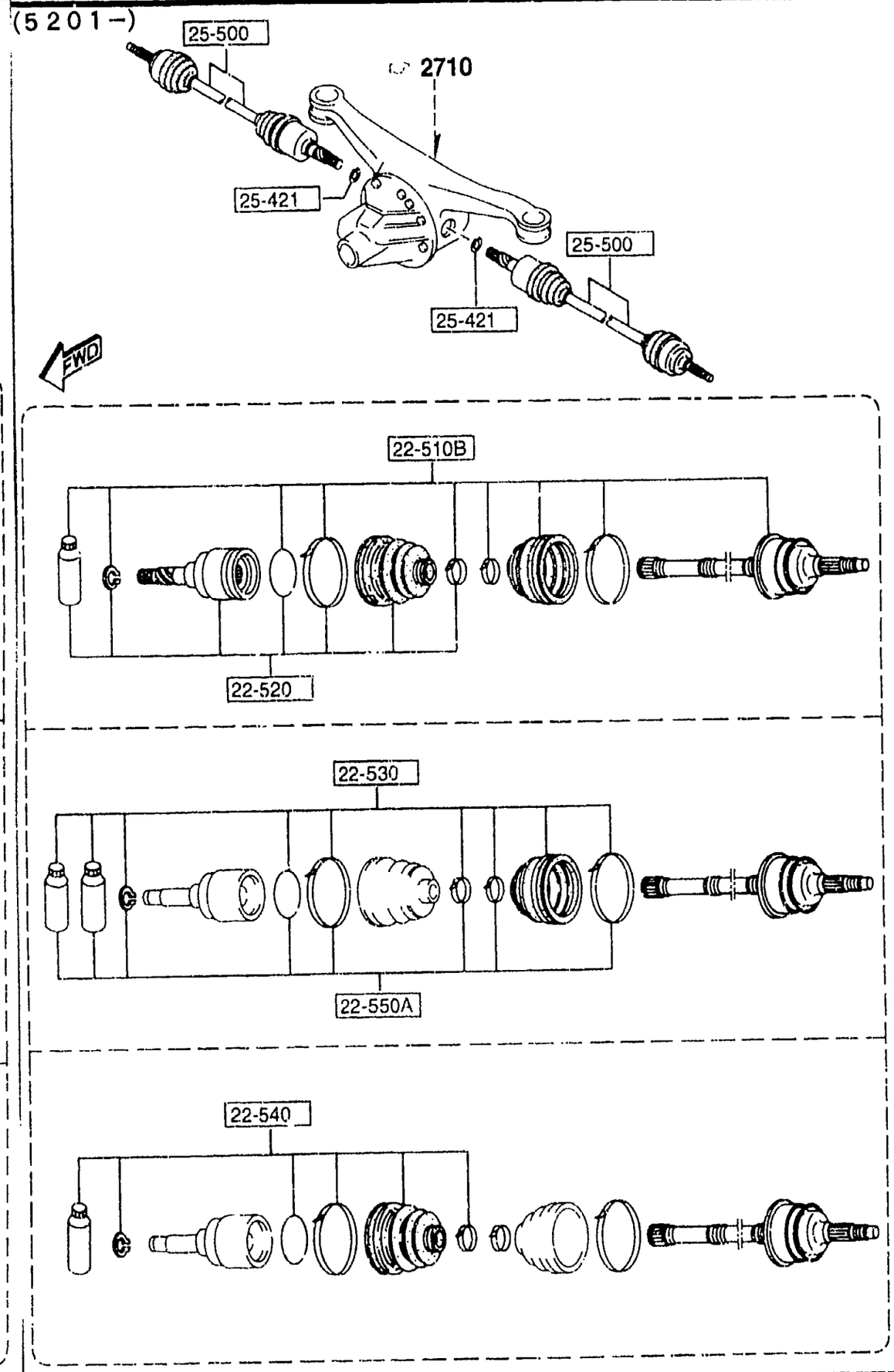


AUNA05

## 2550 REAR DRIVE SHAFT (1/2)

(-5201)

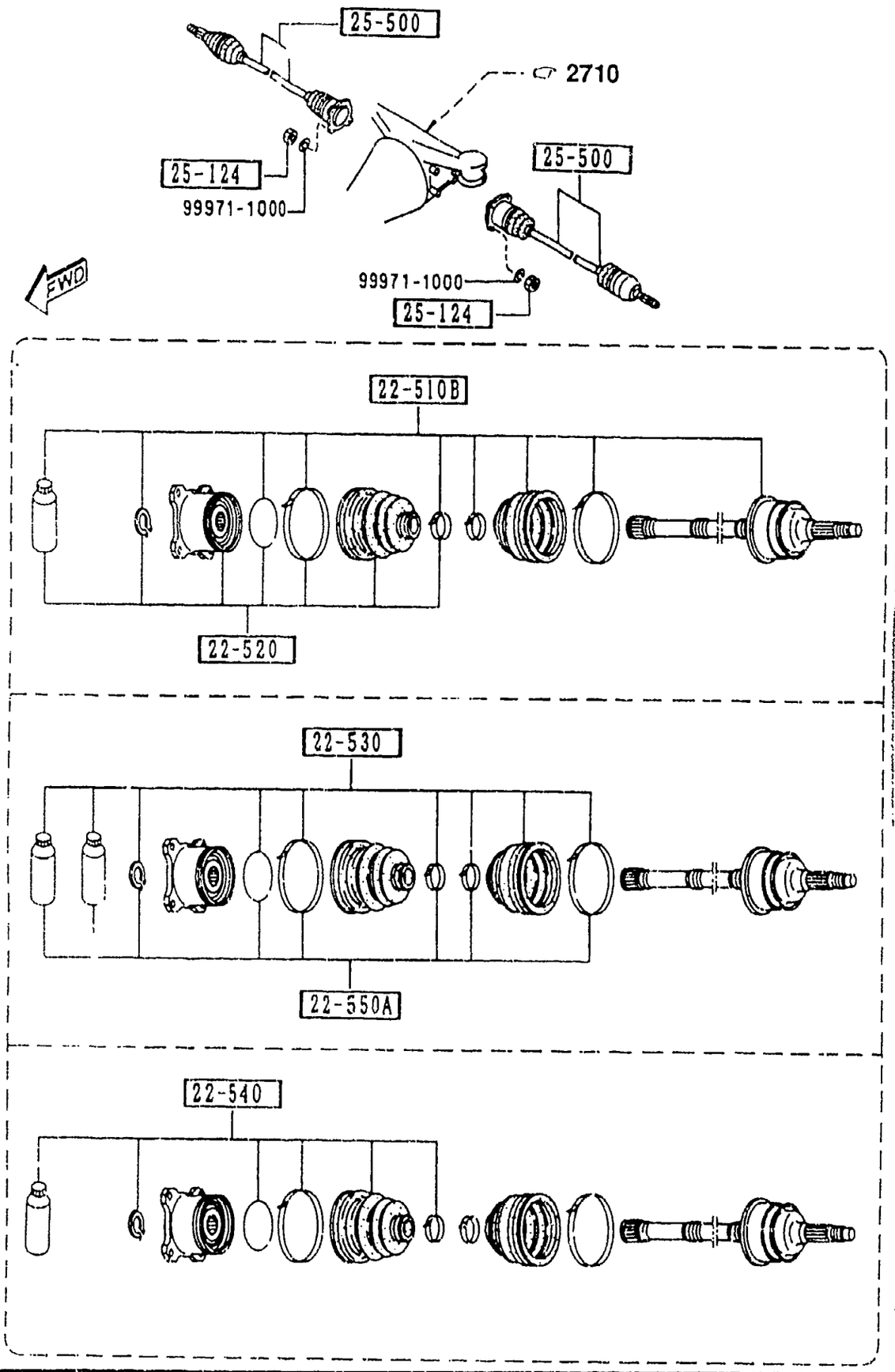


| PART NO. | QTY | MODEL/RESTRICTION | MODEL/RESTRICTION | MODEL/RESTRICTION | FROM-TO |
|---|---|---|---|---|---|
| 22-510B | | JOINT SET,OUTER | | | |
| MD02-22-510 A (MD02-22-510A) | 2 | (W/O A. LOCK BRAKE) | | | -5201 |
| MD03-22-510 A (MD03-22-510A) | 2 | (W/A. LOCK BRAKE) | | | -5201 |
| MD02-22-510A | 2 | (W/O A. LOCK BRAKE) | | | 5201- |
| MD03-22-510A | 2 | (W/A. LOCK BRAKE) | | | 5201- |
| 22-520 | | JOINT SET,INNER | | | |
| MD02-22-520 A (MD02-22-520A) | 2 | | | | -5201 |
| MD02-22-520A | 2 | | | | 5201- |
| 22-530 | | BOOT SET,OUTER JOINT | | | |
| M090-22-530 | 2 | | | | |
| 22-540 | | BOOT SET,INNER JOINT | | | |
| M090-22-540 | 2 | | | | |
| 22-550A | | CLIP SET,DRIVE SHAFT | | | |
| M090-22-550 | 2 | | | | |
| 25-124 | | NUT | | | |
| 1368-25-124 | 8 | | | | -5201 |
| 25-421 | | CLIP | | | |
| G003-25-421 | 2 | | | | 5201- |
| 25-500 | | SHAFT,DRIVE | | | |
| MD02-25-500 | 2 | (W/O A. LOCK BRAKE) | | | -5201 |
| MD03-25-500 | 2 | (W/A. LOCK BRAKE) | | | -5201 |
| MD02-25-500B | 2 | (W/O A. LOCK BRAKE) | | | 5201- |
| MD03-25-500B | 2 | (W/A. LOCK BRAKE) | | | 5201- |

5201 NA35* -614193

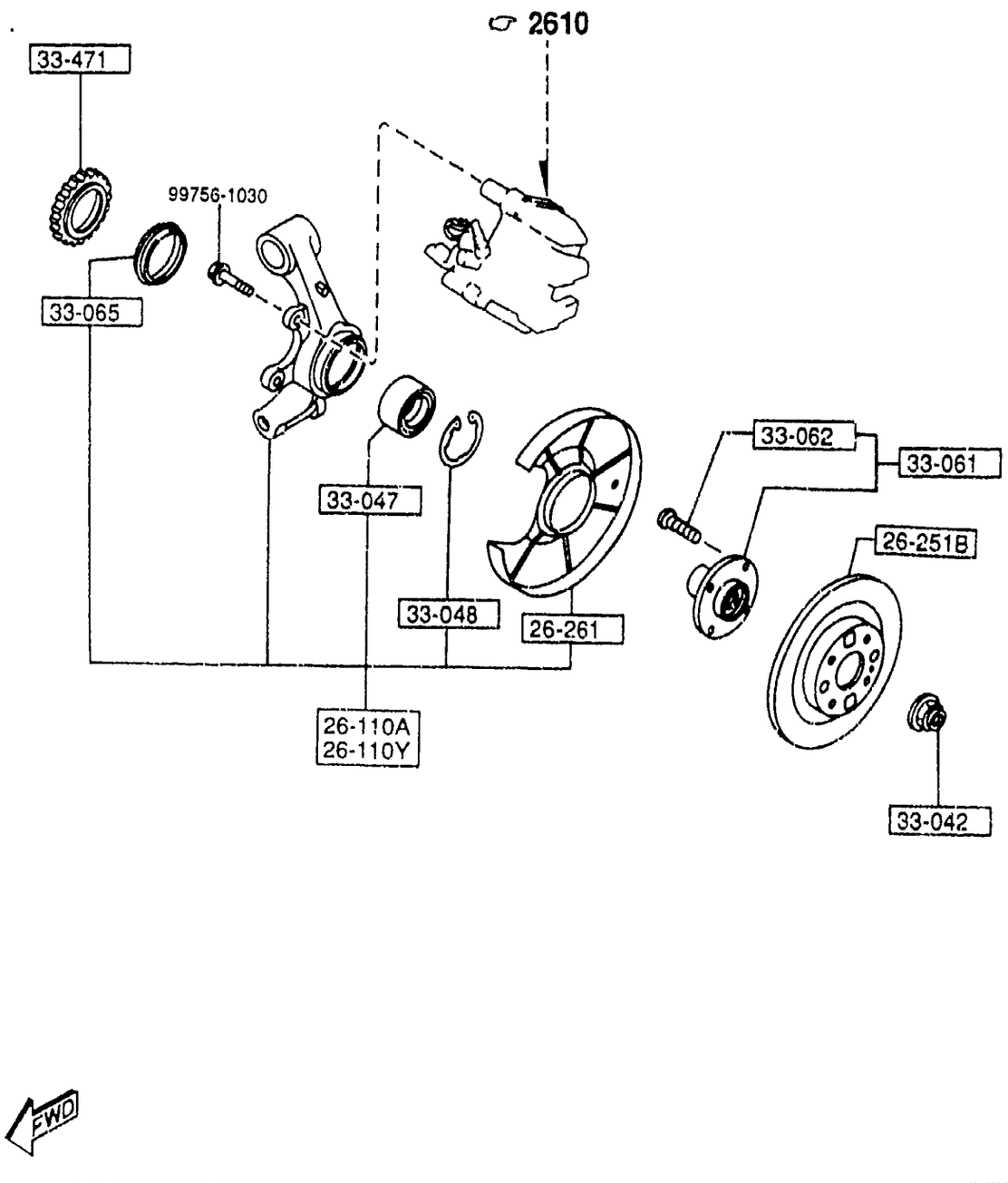


## 2600 -1 * REAR AXLE

| PART NO. | QTY | MODEL/RESTRICTION | MODEL/RESTRICTION | MODEL/RESTRICTION | FROM-TO |
|---|---|---|---|---|---|
| 26-110A | | KNUCKLE(R),REAR | | | |
| NA75-26-130 | 1 | (W/O A. LOCK BRAKE) | | | |
| NA80-26-130 | 1 | (W/A. LOCK BRAKE) | | | |
| 26-110Y | | KNUCKLE(L),REAR | | | |
| NA75-26-140 | 1 | (W/O A. LOCK BRAKE) | | | |
| NA80-26-140 | 1 | (W/A. LOCK BRAKE) | | | |
| 26-251B | | PLATE,DISC | | | |
| BR74-26-251B | 2 | | | | |
| 26-261 | | COVER,DUST | | | |
| B530-26-261B | 2 | | | | |
| 33-042 | | NUT | | | |
| D06Y-33-042 | 2 | W/WASHER | | | |
| 33-047 | | BEARING,WHEEL | | | |
| B455-33-047B | 2 | | | | -6624 |
| A (B455-33-047C) | | | | | |
| *B455-33-047C | 2 | | | | 6624- |
| 33-048 | | RING,RETAINING-DISC PLATE | | | |
| H260-33-048 | 2 | | | | |
| 33-061 | | HUB,WHEEL | | | |
| B01A-33-060 | 2 | | | | -4C01 |
| A (B01A-33-060A) | | | | | |
| B01A-33-060A | 2 | | | | 4C01- |
| 33-062 | | BOLT,HUB | | | |
| B01Y-33-062 | 8 | | | | |
| 33-065 | | SEAL,OIL-AXLE | | | |
| G304-33-065 | 2 | | | | |
| 33-471 | | ROTOR,SENSOR-FRT A.B.S. | | | |
| B603-33-471 | 2 | | | | |

4C01 NA35* -609691
6624 NA3** -719627

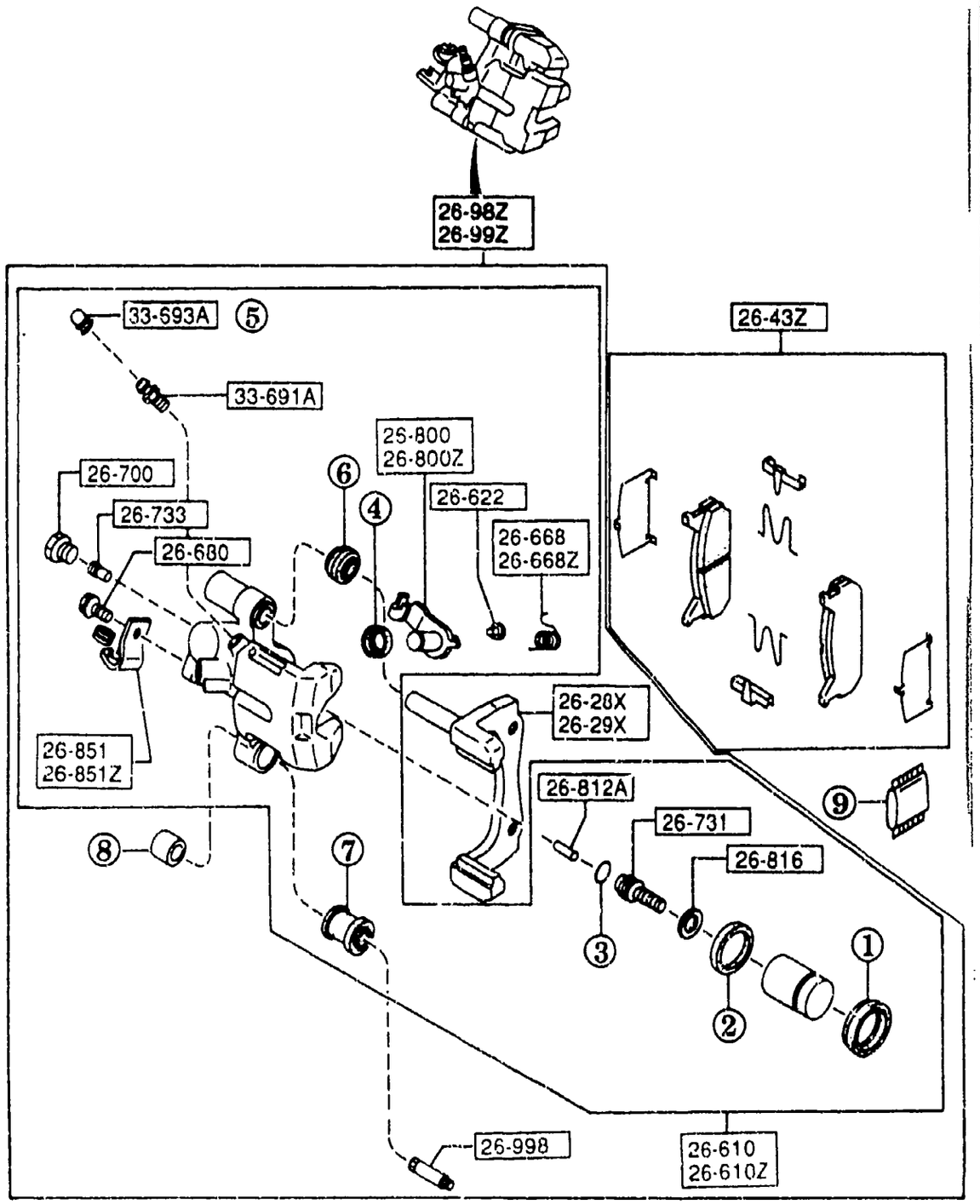


NOTE

① ··· ⑨ ⇨ 26-46Z

THE D-CODE OF 26-46Z CONSISTS OF FIGURE NUMBERS ① THROUGH ⑨.

FWD

THOUGH ILLUSTRATIONS OF D-CODE 26-43Z AND 26-46Z ARE FOR LEFT SIDE ONLY, QUANTITIES OF THESE D-CODES IN THE TEXT ARE FOR ONE VEHICLE.





| PART NO. | QTY | MODEL/RESTRICTION | MODEL/RESTRICTION | MODEL/RESTRICTION | FROM-TO |
|---|---|---|---|---|---|
| 26-28X | | SUPPORT(R),MOUNTING | | | |
| NA75-26-28X | 1 | | | | |
| 26-29X | | SUPPORT(L),MOUNTING | | | |
| NA75-26-29X | 1 | | | | |
| 26-43Z | | PAD SET,RR CALIPER | | | |
| NAY5-26-43Z | 1 | | | | -5C01 |
| AN(NAY5-26-43ZA) | | | | | |
| *NAY5-26-43ZA | 1 | | | | 5C01- |
| 26-46Z | | SEAL & BOOT SET,CAL. -RR | | | |
| NAY1-26-46ZA | 1 | | | | |
| 26-610 | | BODY & PISTON(R),CAL IPER | | | |
| NA75-26-61XA | 1 | | | | -5901 |
| A (NA75-26-61XB) | | | | | |
| NA75-26-61XB | 1 | | | | 5901- |
| 26-610Z | | BODY & PISTON(L),CAL IPER | | | |
| NA75-26-71XA | 1 | | | | -5901 |
| A (NA75-26-71XB) | | | | | |
| NA75-26-71XB | 1 | | | | 5901- |
| 26-622 | | PIN,STOPPER-RR CALIP ER | | | |
| BW0H-26-696 | 2 | | | | |
| 26-668 | | SPRING(R),LEVER | | | |
| BW0H-26-668 | 1 | | | | |
| 26-668Z | | SPRING(L),LEVER | | | |
| BW0H-26-669 | 1 | | | | |
| 26-680 | | BOLT | | | |
| BW0H-26-680 | 2 | | | | |
| 26-700 | | PLUG,SCREW | | | |
| BW0H-26-700 | 2 | | | | |
| 26-731 | | SPINDLE,ADJUSTER | | | |
| GA2E-26-731 | 2 | | | | -5201 |

5201 NA35* -614193
5901 NA3** -702989
5C01 NA3** -706448

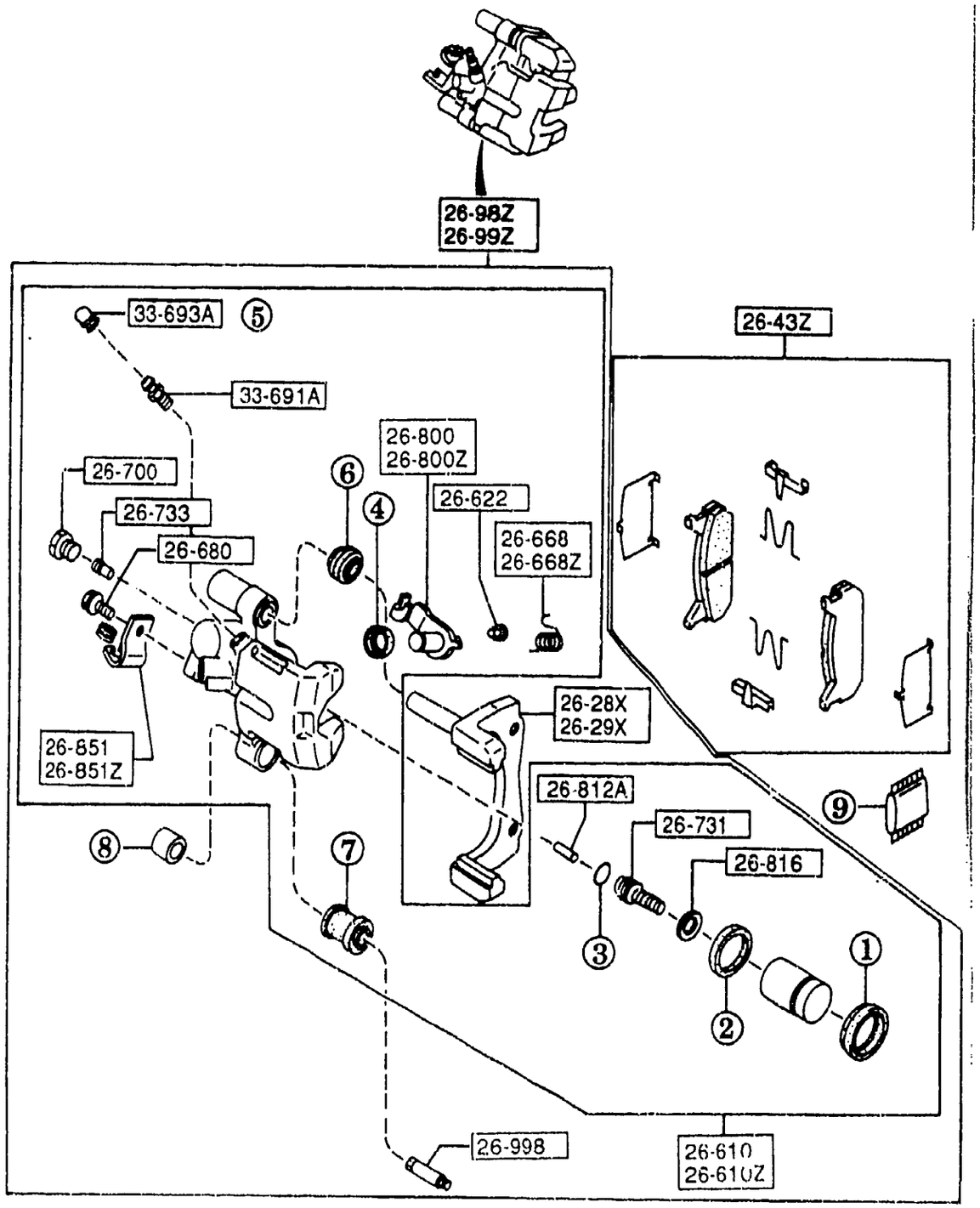


NOTE

① ··· ⑨ ⇨ 26-46Z

THE D-CODE OF 26-46Z CONSISTS OF FIGURE NUMBERS ① THROUGH ⑨.

FWD

THOUGH ILLUSTRATIONS OF D-CODE 26-43Z AND 26-46Z ARE FOR LEFT SIDE ONLY, QUANTITIES OF THESE D-CODES IN THE TEXT ARE FOR ONE VEHICLE.



| PART NO. | QTY | MODEL/RESTRICTION | MODEL/RESTRICTION | MODEL/RESTRICTION | FROM-TO |
|---|---|---|---|---|---|
| CONT'D | | | | | |
| NA75-26-731 | 2 | | | | 5201- |
| 26-733 | | GEAR,ADJUST | | | |
| BWOH-26-733 | 2 | | | | |
| 26-800 | | LEVER(R),OPERATING | | | |
| BR76-26-800 A (BR76-26-800A) | 1 | | | | -5901 |
| BR76-26-800A | 1 | | | | 5901- |
| 26-800Z | | LEVER(L),OPERATING | | | |
| BR76-26-810 A (BR76-26-810A) | 1 | | | | -5901 |
| BR76-26-810A | 1 | | | | 5901- |
| 26-812A | | ROD,PUSH-FRT CALIPER | | | |
| BWOH-26-812 | 2 | | | | |
| 26-816 | | RING,SNAP-RR CALIPER | | | |
| GA2E-26-816 | 2 | | | | |
| 26-851 | | BRACKET(R),CABLE | | | |
| BWOH-26-851 | 1 | | | | |
| 26-851Z | | BRACKET(L),CABLE | | | |
| BWOH-26-861 | 1 | | | | |
| 26-98Z | | CALIPER(R),PADLESS-RR | | | |
| *NAZ5-26-98ZA A (NAZ5-26-98ZB) | 1 | | | | -5901 |
| *NAZ5-26-98ZB | 1 | | | | 5901- |
| 26-99Z | | CALIPER(L),PADLESS-RR | | | |
| *NAZ5-26-99ZA A (NAZ5-26-99ZB) | 1 | | | | -5901 |
| *NAZ5-26-99ZB | 1 | | | | 5901- |
| 26-998 | | PIN,GUIDE | | | |
| BWOH-26-998A | 2 | | | | |
| 33-691A | | SCREW,BLEEDER | | | |
| BWOH-26-691 | 2 | | | | |

5201 NA35* -614193
5901 NA3** -702989

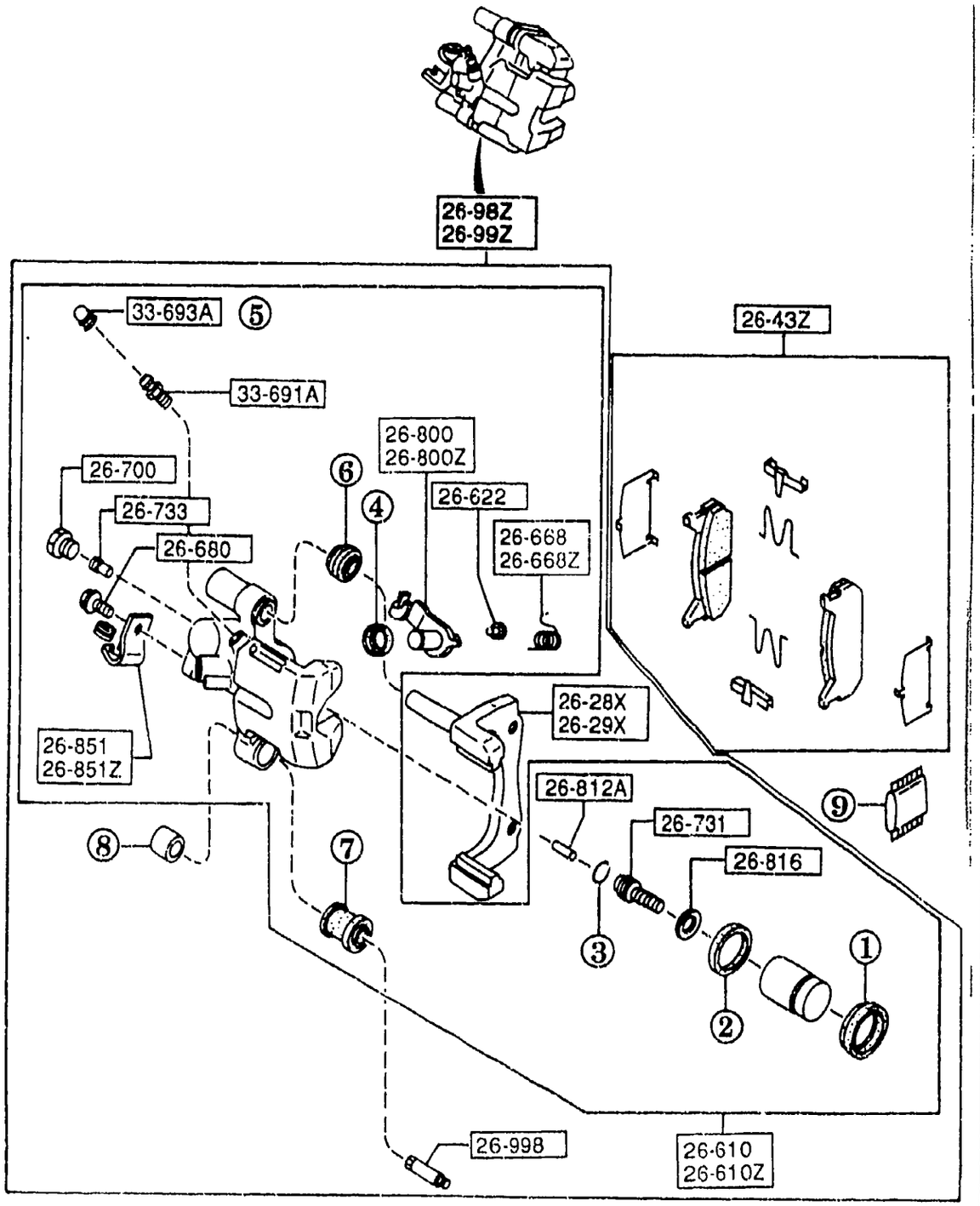


NOTE

① ··· ⑨ ⇨ 26-46Z

THE D-CODE OF 26-46Z CONSISTS OF FIGURE NUMBERS ① THROUGH ⑨.

FWD

THOUGH ILLUSTRATIONS OF D-CODE 26-43Z AND 26-46Z ARE FOR LEFT SIDE ONLY, QUANTITIES OF THESE D-CODES IN THE TEXT ARE FOR ONE VEHICLE.

## 2610 -3 * REAR BRAKE MECHANISMS

| PART NO. | QTY | MODEL/RESTRICTION | MODEL/RESTRICTION | MODEL/RESTRICTION | FROM-TO |
|---|---|---|---|---|---|
| 33-693A<br>0259-33-693 | 2 | CAP,BLEEDER SCREW | | | |

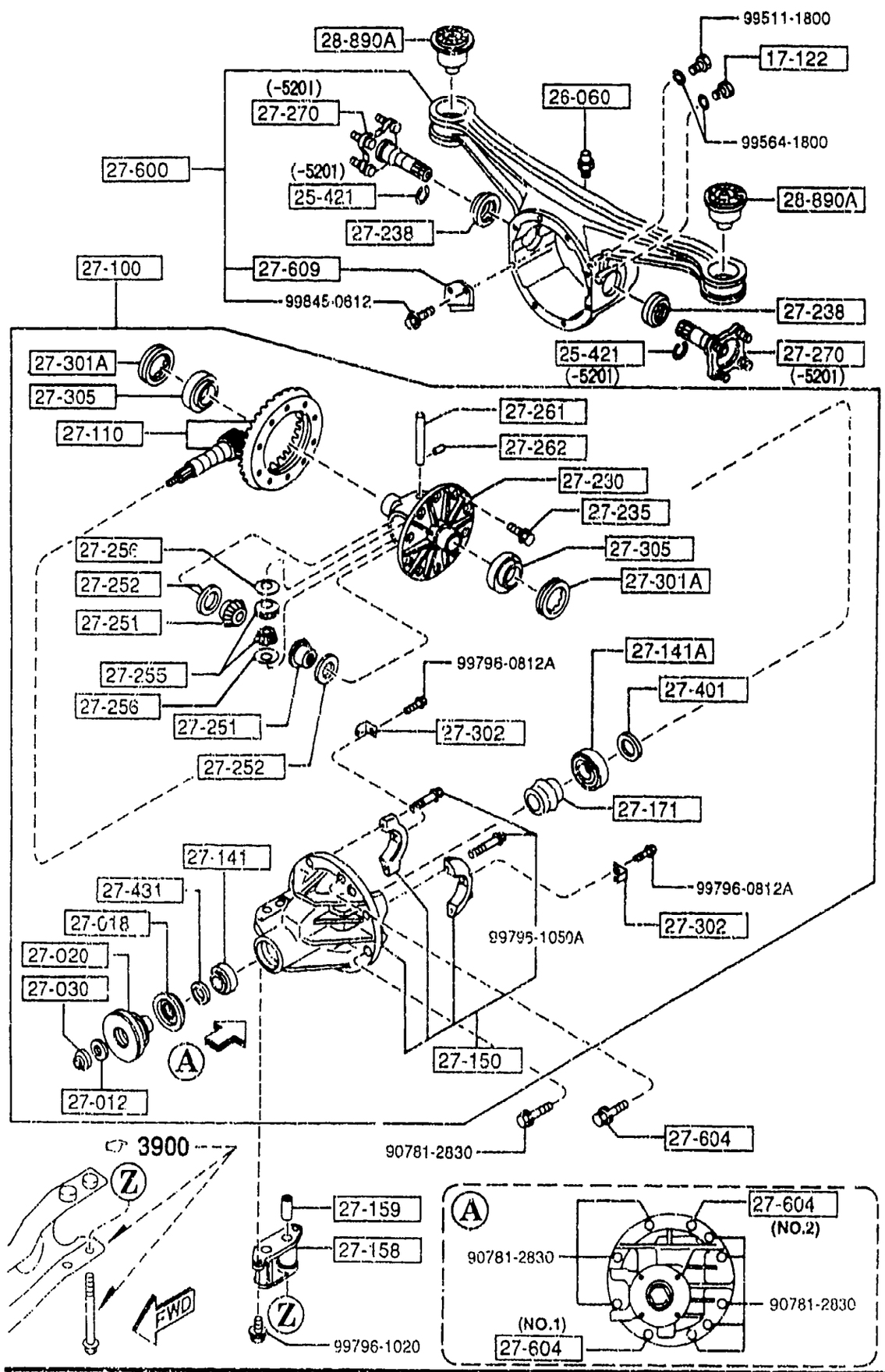






| PART NO. | QTY | MODEL/RESTRICTION | MODEL/RESTRICTION | MODEL/RESTRICTION | FROM-TO |
|---|---|---|---|---|---|
| 17-122 | | PLUG,MAGNET | | | |
| 0810-17-121 | 1 | | | | |
| 25-421 | | CLIP | | | |
| 0003-25-421 | 2 | | | | -5201 |
| 26-060 | | BREATHER | | | |
| 0730-26-060 | 1 | | | | |
| 27-012 | | WASHER | | | |
| 0223-27-012 | 1 | | | | |
| 27-018 | | SEAL,OIL | | | |
| MA02-27-165 | 1 | | | | -5508 |
| MA02-27-165A | 1 | | | | 5508- |
| 27-020 | | FLANGE,COMPANION | | | |
| MA02-27-120 | 1 | (AT) | | | -5508 |
| MA03-27-120 | 1 | (MT) | | | -5508 |
| MA02-27-120A | 1 | (AT) | | | 5508- |
| MA03-27-120A | 1 | (MT) | | | 5508- |
| 27-030 | | NUT,LOCK | | | |
| 0223-27-030 | 1 | | | | |
| 27-100 | | DRIVING & DIFF. | | | |
| MA02-27-100 | 1 | (AT) | | | |
| MA03-27-100A | 1 | (MT) | | | |
| 27-110 | | GEAR SET,FINAL | | | |
| M068-27-110A | 1 | R=4.100 | | | |
| 27-141 | | BEARING,PINION | | | |
| 0755-27-210 | 1 | | | | |
| 27-141A | | BEARING,PINION | | | |
| M025-27-210 | 1 | | | | |
| 27-150 | | CARRIER,DIFFERENTIAL | | | |

5201 NA35* -614193
5508 NA35* -620210

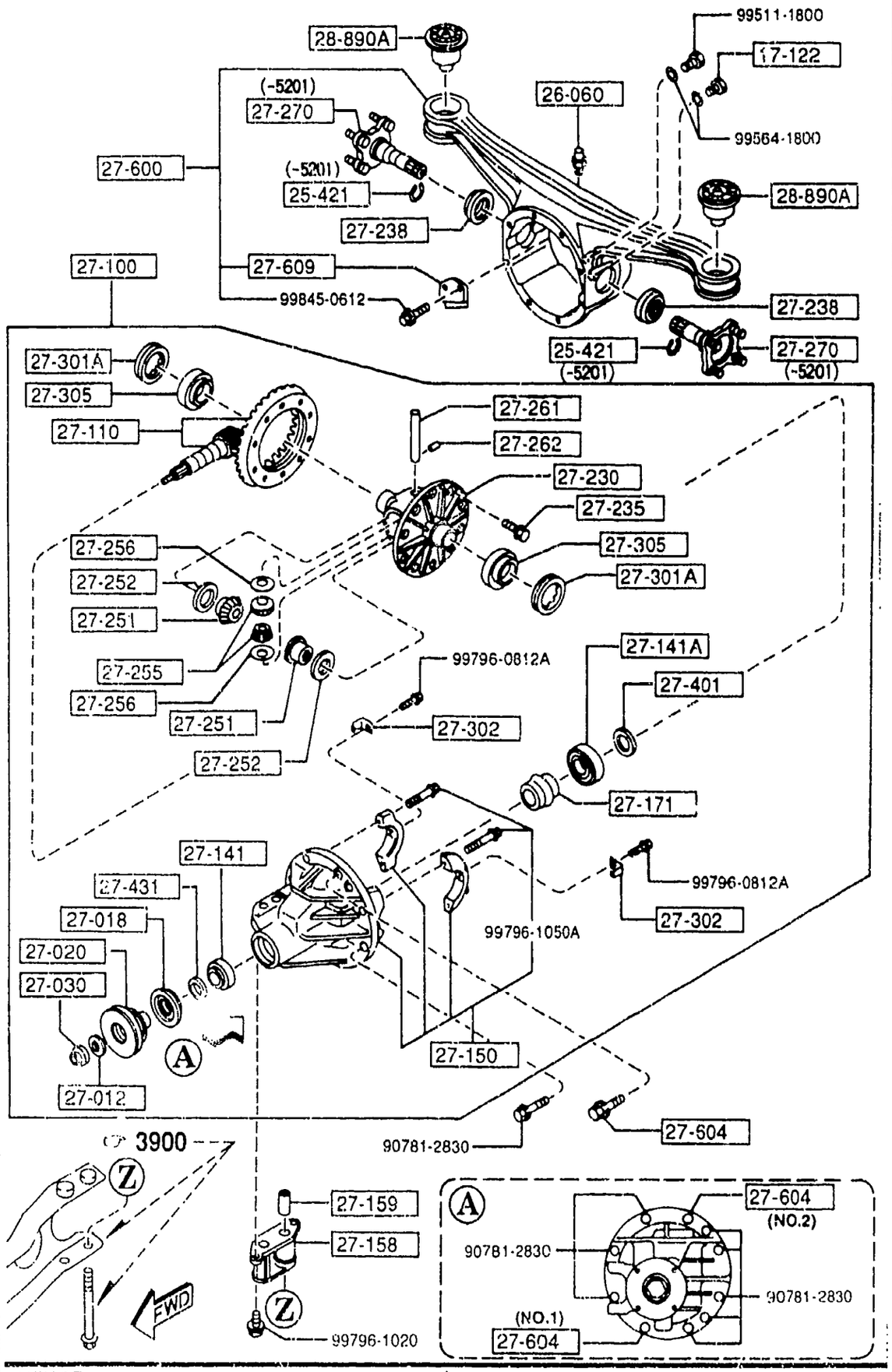




| PART NO. | QTY | MODEL/RESTRICTION | MODEL/RESTRICTION | MODEL/RESTRICTION | FROM-TO |
|---|---|---|---|---|---|
| CONT'D | | | | | |
| MA02-27-150 | 1 | | | | -6601 |
| A (MA02-27-150A) | | | | | |
| *MA02-27-150A | 1 | | | | 6601- |
| 27-158 | | SPACE | | | |
| T020-27-158A | 1 | | | | |
| 27-159 | | PIN,TUBULAR | | | |
| T020-27-159A | 1 | | | | -4901 |
| MA02-27-159 | 1 | | | | 4901- |
| 27-171 | | PIECE,DISTANCE | | | |
| M035-27-171 | 1 | | | | |
| 27-230 | | CASE | | | |
| M069-27-231 | 1 | | | | |
| 27-235 | | BOLT,RING GEAR | | | |
| 8051-27-235 | 10 | D=10.0MM | | | |
| 8051-27-236 | 10 | D=10.2MM | | | |
| 27-238 | | SEAL,OIL | | | |
| MA02-27-238 | 2 | | | | |
| 27-251 | | GEAR,DIFF.SIDE | | | |
| M069-27-251 | 2 | | | | |
| 27-252 | | WASHER | | | |
| 0290-27-252 | 2 | T=2MM | | | |
| 0290-27-253 | 2 | T=2.1MM | | | |
| 0290-27-254 | 2 | T=2.2MM | | | |
| 0290-27-256 | 2 | T=2.05MM | | | |
| 0290-27-259 | 2 | T=2.15MM | | | |
| 27-255 | | PINION,DIFFERENTIAL | | | |
| M025-27-255B | 2 | | | | -6301 |

4901 NA35* -602618
6301 NA3** -714662
6601 NA3** -719621

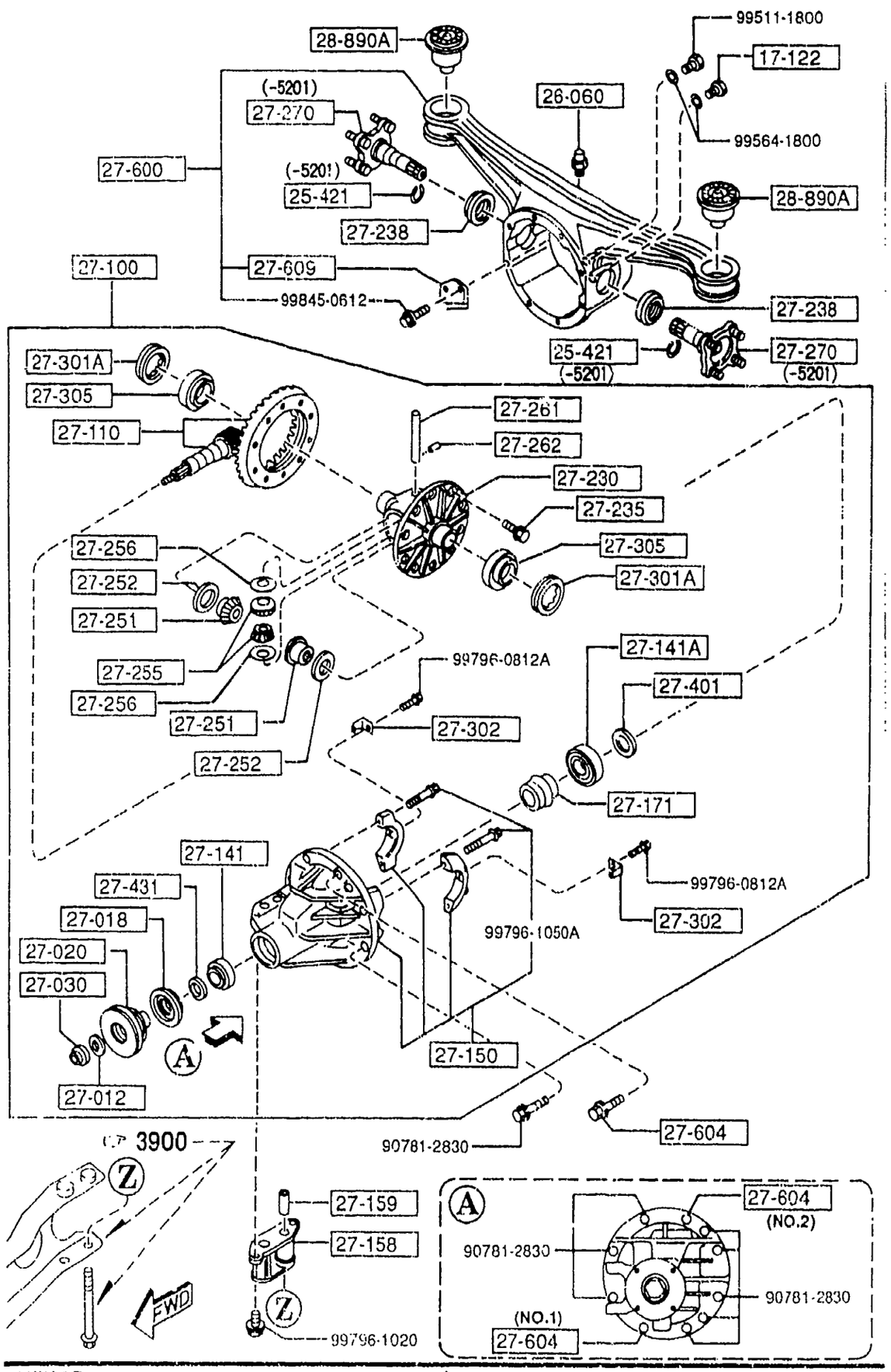






| PART NO. | QTY | MODEL/RESTRICTION | MODEL/RESTRICTION | MODEL/RESTRICTION | FROM-TO |
|---|---|---|---|---|---|
| CONT'D A (M025-27-255C) | | | | | |
| *M025-27-255C | 2 | | | | 6301- |
| 27-256 | | WASHER,THRUST | | | |
| M025-27-256 | 2 | T=2.0MM | | | |
| 27-261 | | SHAFT,DIFF. PINION | | | |
| M025-27-261A | 1 | | | | |
| 27-262 | | PIN | | | |
| 0114-27-262 | 1 | | | | |
| 27-270 | | YOKE,DIFFERENTIAL | | | |
| M055-27-270C | 2 | | | | -5201 |
| 27-301A | | SCREW,ADJUST | | | |
| 0290-27-301 | 2 | | | | |
| 27-302 | | PLATE,LOCK | | | |
| 0290-27-302 | 2 | | | | |
| 27-305 | | BEARING | | | |
| 0221-27-350 | 2 | | | | |
| 27-401 | | SPACER | | | |
| 0223-27-401A | 1 | T=3.08MM | | | |
| 0223-27-402A | 1 | T=3.11MM | | | |
| 0223-27-403A | 1 | T=3.14MM | | | |
| 0223-27-404A | 1 | T=3.17MM | | | |
| 0223-27-405A | 1 | T=3.2MM | | | |
| 0223-27-406A | 1 | T=3.23MM | | | |
| 0223-27-407A | 1 | T=3.26MM | | | |
| 0223-27-408A | 1 | T=3.29MM | | | |
| 0223-27-409A | | T=3.32MM | | | |

5201 NA35* -614193
6301 NA3** -714662

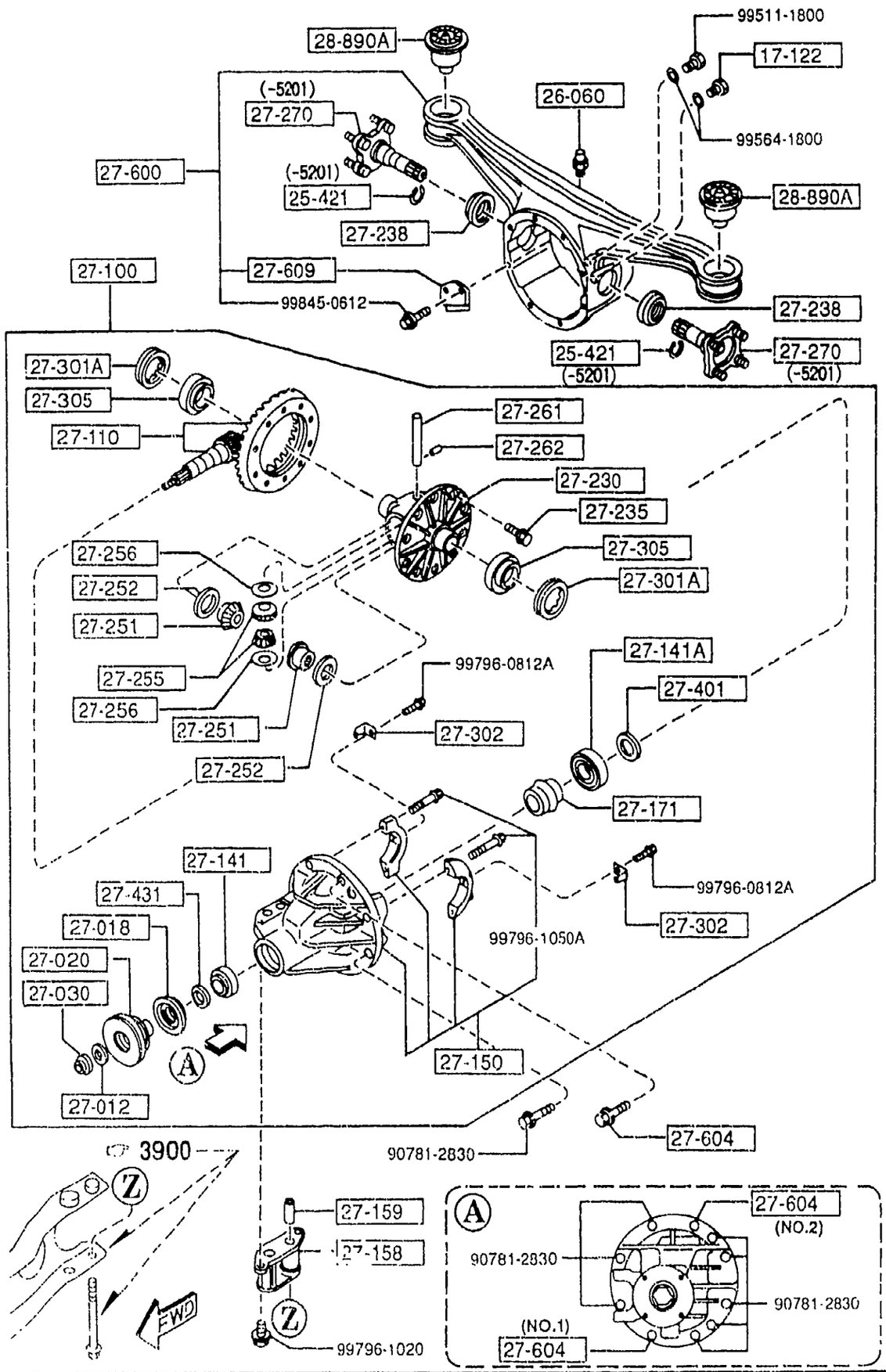






| PART NO. | QTY | MODEL/RESTRICTION | MODEL/RESTRICTION | MODEL/RESTRICTION | FROM-TO |
|---|---|---|---|---|---|
| CONT'D | | | | | |
| | 1 | | | | |
| 0223-27-411A | 1 | T=3.35MM | | | |
| 0223-27-412A | 1 | T=3.38MM | | | |
| 0223-27-413A | 1 | T=3.41MM | | | |
| 0223-27-414A | 1 | T=3.44MM | | | |
| 0223-27-415A | 1 | T=3.47MM | | | |
| 0223-27-416 | 1 | T=3.095MM | | | 5301- |
| 0223-27-417 | 1 | T=3.125MM | | | 5301- |
| 0223-27-418 | 1 | T=3.155MM | | | 5301- |
| 0223-27-419 | 1 | T=3.185MM | | | 5301- |
| 0223-27-422 | 1 | T=3.215MM | | | 5301- |
| 0223-27-423 | 1 | T=3.245MM | | | 5301- |
| 0223-27-424 | 1 | T=3.275MM | | | 5301- |
| 0223-27-425 | 1 | T=3.305MM | | | 5301- |
| 0223-27-426 | 1 | T=3.335MM | | | 5301- |
| 0223-27-427 | 1 | T=3.365MM | | | 5301- |
| 0223-27-428 | 1 | T=3.395MM | | | 5301- |
| 0223-27-433 | 1 | T=3.425MM | | | 5301- |
| 0223-27-434 | 1 | T=3.455MM | | | 5301- |
| +----------+ \| 27-431 \| +----------+ | | SPACER | | | |
| PA01-27-431 | 1 | | | | |
| +----------+ \| 27-600 \| +----------+ | | CASING,DIFFERENTIAL | | | |
| MA02-27-600 | 1 | | | | -5201 |
| AN(MA02-27-600A) | | | | | |
| MA02-27-600A | 1 | | | | 5201- |

5201 NA35* -614193
5301 NA35* -616742

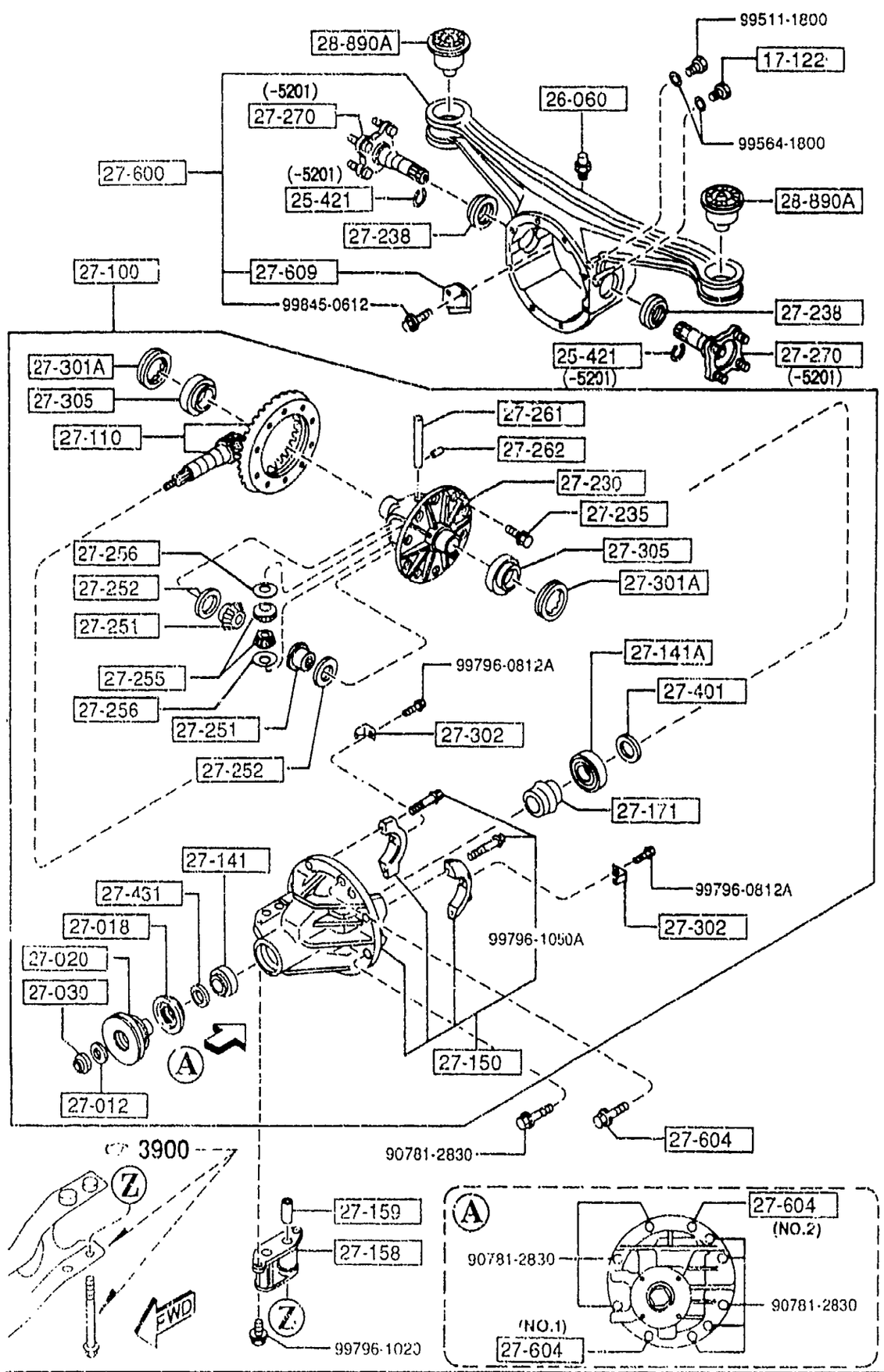






| PART NO. | QTY | MODEL/RESTRICTION | MODEL/RESTRICTION | MODEL/RESTRICTION | FROM-TO |
|---|---|---|---|---|---|
| +---------+ | | | | | |
| \| 27-604 \| | | BOLT,CARRIER | | | |
| +---------+ | | | | | |
| M053-27-604 | 1 | (ILLUST. NO.1) | | | |
| M053-27-605 | 1 | (ILLUST. NO.2) | | | |
| +---------+ | | | | | |
| \| 27-609 \| | | PLATE,BAFFLE-DIFF CA SING | | | |
| +---------+ | | | | | |
| M0A1-27-609A | 1 | | | | |
| +---------+ | | | | | |
| \| 28-890A \| | | RUBBER,SUB FRAME MTG | | | |
| +---------+ | | | | | |
| NA01-28-890 | 2 | | | | |



1-N11

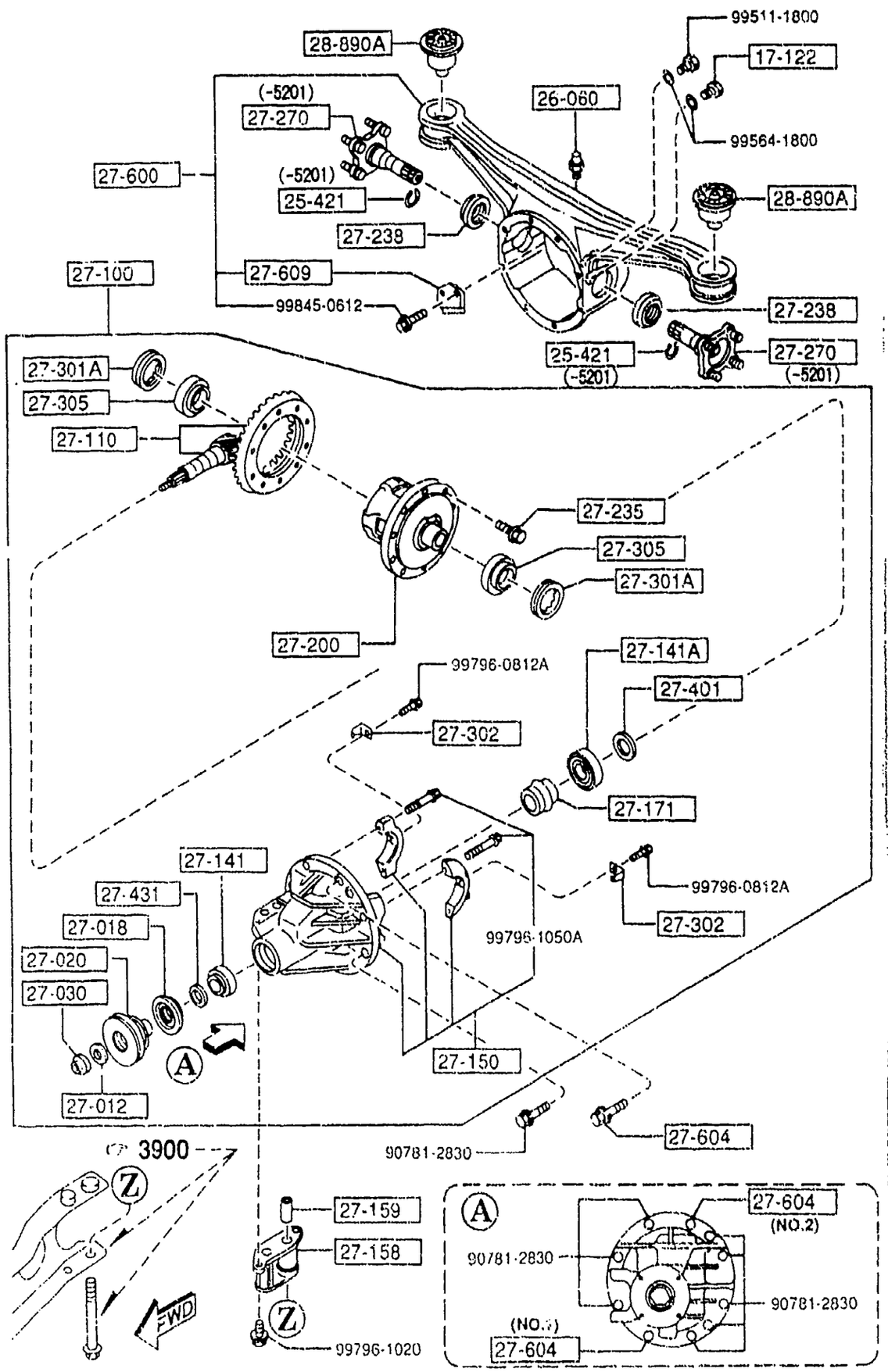




| PART NO. | QTY | MODEL/RESTRICTION | MODEL/RESTRICTION | MODEL/RESTRICTION | FROM-TO |
|---|---|---|---|---|---|
| 17-122 | | PLUG,MAGNET | | | |
| 0810-17-121 | 1 | | | | |
| 25-421 | | CLIP | | | |
| G003-25-421 | 2 | | | | -5201 |
| 26-060 | | BREATHER | | | |
| 0730-26-060 | 1 | | | | |
| 27-012 | | WASHER | | | |
| 0223-27-012 | 1 | | | | |
| 27-018 | | SEAL,OIL | | | |
| MA02-27-165 | 1 | | | | -5508 |
| MA02-27-165A | 1 | | | | 5508- |
| 27-020 | | FLANGE,COMPANION | | | |
| MA03-27-120 | 1 | | | | -5508 |
| MA03-27-120A | 1 | | | | 5508- |
| 27-030 | | NUT,LOCK | | | |
| 0223-27-030 | 1 | | | | |
| 27-100 | | DRIVING & DIFF. | | | |
| MM01-27-100A | 1 | ('95 MODEL) | | | |
| MM03-27-100 | 1 | ('96 MODEL) | | | |
| 27-110 | | GEAR SET,FINAL | | | |
| M068-27-110A | 1 | R=4.100 | | | |
| 27-141 | | BEARING,PINION | | | |
| 0755-27-210 | 1 | | | | |
| 27-141A | | BEARING,PINION | | | |
| M025-27-210 | 1 | | | | |
| 27-150 | | CARRIER,DIFFERENTIAL | | | |
| MA02-27-150 | 1 | | | | -6601 |
| A (MA02- 7-1 .0A) | | | | | |
| *MA02-27 [illegible] A | 1 | | | | 6601- |

5201 NA35* -614193
5508 NA35* -620210
6601 NA3** -719621

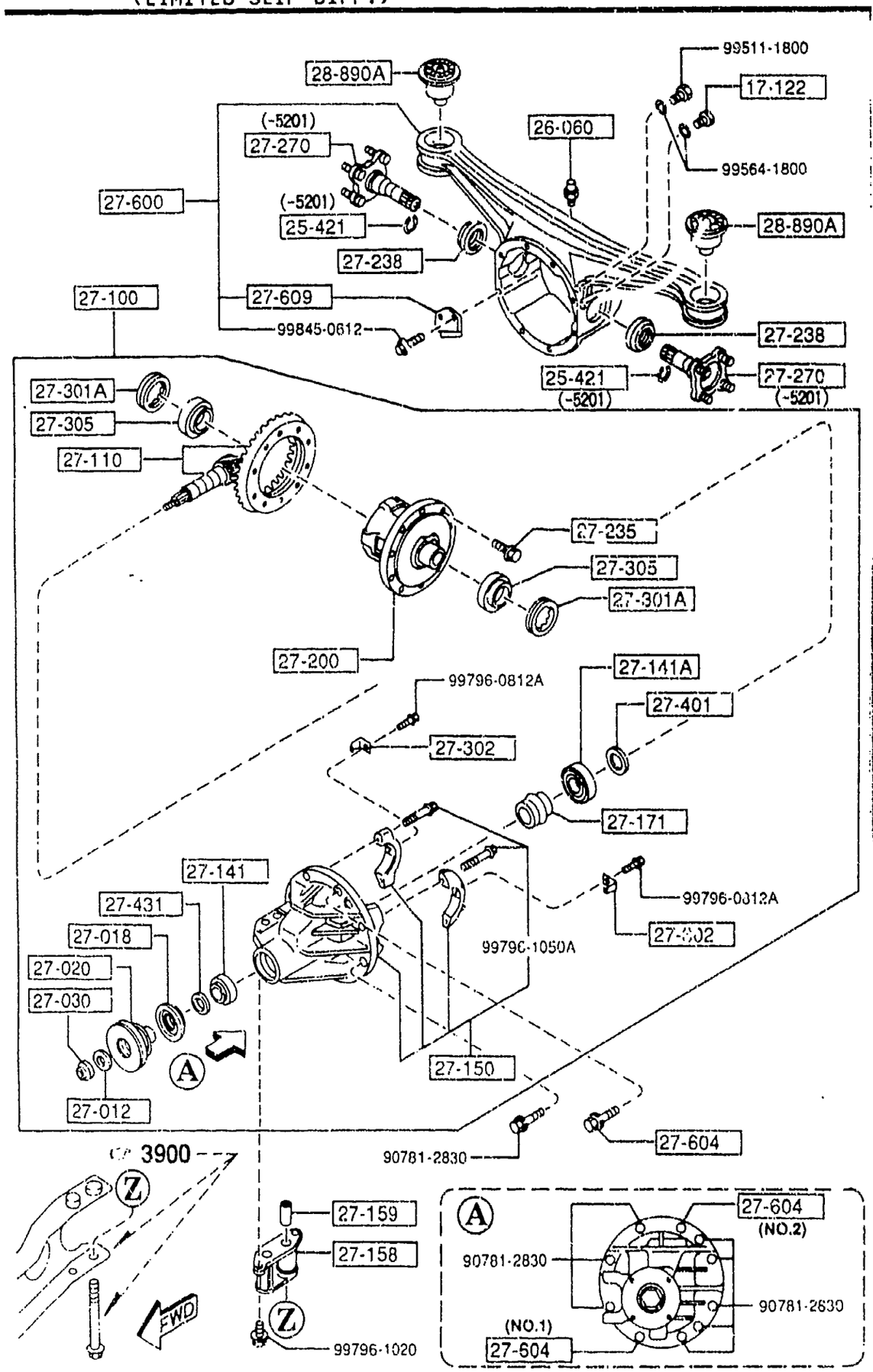






| PART NO. | QTY | MODEL/RESTRICTION | MODEL/RESTRICTION | MODEL/RESTRICTION | FROM-TO |
|---|---|---|---|---|---|
| 27-158 | | SPACE | | | |
| T020-27-158A | 1 | | | | |
| 27-159 | | PIN,TUBULAR | | | |
| T020-27-159A | 1 | | | | -4901 |
| MA02-27-159 | 1 | | | | 4901- |
| 27-171 | | PIECE,DISTANCE | | | |
| M035-27-171 | 1 | | | | |
| 27-200 | | DIFFERENTIAL | | | |
| MM01-27-200 | 1 | ('95 MODEL) | | | |
| MM02-27-200 A (MM02-27-200A) | 1 | ('96 MODEL) | | | -5731 |
| MM02-27-200A | 1 | ('96 MODEL) | | | 5731- |
| 27-235 | | BOLT,RING GEAR | | | |
| 8051-27-235 | 10 | D=10.0MM | | | |
| 8051-27-236 | 10 | D=10.2MM | | | |
| 27-238 | | SEAL,OIL | | | |
| MA02-27-238 | 2 | | | | |
| 27-270 | | YOKE,DIFFEREI IAL | | | |
| M055-27-270C | 2 | | | | -5201 |
| 27-301A | | SCREW,ADJUST | | | |
| 0290-27-301 | 2 | | | | |
| 27-302 | | PLATE,LOCK | | | |
| 0290-27-302 | 2 | | | | |
| 27-305 | | BEARING | | | |
| 0221-27-350 | 2 | | | | |
| 27-401 | | SPACER | | | |
| 0223-27-401A | 1 | T=3.00MM | | | |
| 0223-27-402A | 1 | T=3.11MM | | | |

4901 NA35* -602618
5201 NA35* -614193
5731 NA3** -700786

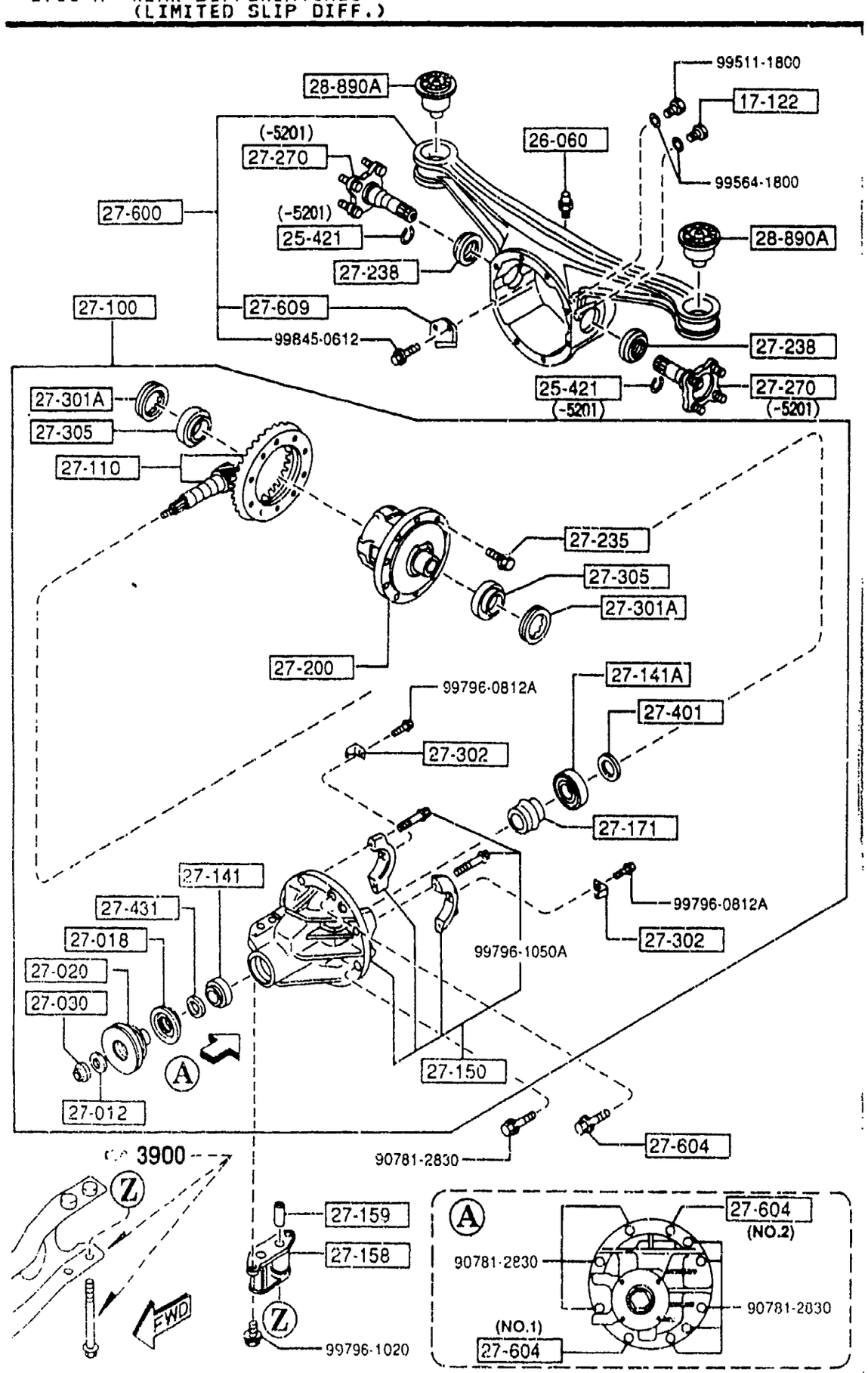




| PART NO. | QTY | MODEL/RESTRICTION | MODEL/RESTRICTION | MODEL/RESTRICTION | FROM-TO |
|---|---|---|---|---|---|
| CONT'D | | | | | |
| 0223-27-403A | 1 | T=3.14MM | | | |
| 0223-27-404A | 1 | T=3.17MM | | | |
| 0223-27-405A | 1 | T=3.2MM | | | |
| 0223-27-406A | 1 | T 3.23MM | | | |
| 0223-27-407A | 1 | T=3.26MM | | | |
| 0223-27-408A | 1 | T=3.29MM | | | |
| 0223-27-409A | 1 | T=3.32MM | | | |
| 0223-27-411A | 1 | T=3.35MM | | | |
| 0223-27-412A | 1 | T=3.38MM | | | |
| 0223-27-413A | 1 | T=3.41MM | | | |
| 0223-27-414A | 1 | T=3.44MM | | | |
| 0223-27-415A | 1 | T=3.47MM | | | |
| 0223-27-416 | 1 | T=3.095MM | | | 5301- |
| 0223-27-417 | 1 | T=3.125MM | | | 5301- |
| 0223-27-418 | 1 | T=3.155MM | | | 5301- |
| 0223-27-419 | 1 | T=3.185MM | | | 5301- |
| 0223-27-422 | 1 | T=3.215MM | | | 5301- |
| 0223-27-423 | 1 | T=3.245MM | | | 5301- |
| 0223-27-424 | 1 | T=3.275MM | | | 5301- |
| 0223-27-425 | 1 | T=3.305MM | | | 5301- |
| 0223-27-426 | 1 | T=3.335MM | | | 5301- |
| 0223-27-427 | 1 | T=3.365MM | | | 5301- |
| 0223-27-428 | 1 | T=3.395MM | | | 5301- |

5301 NA35* -616742

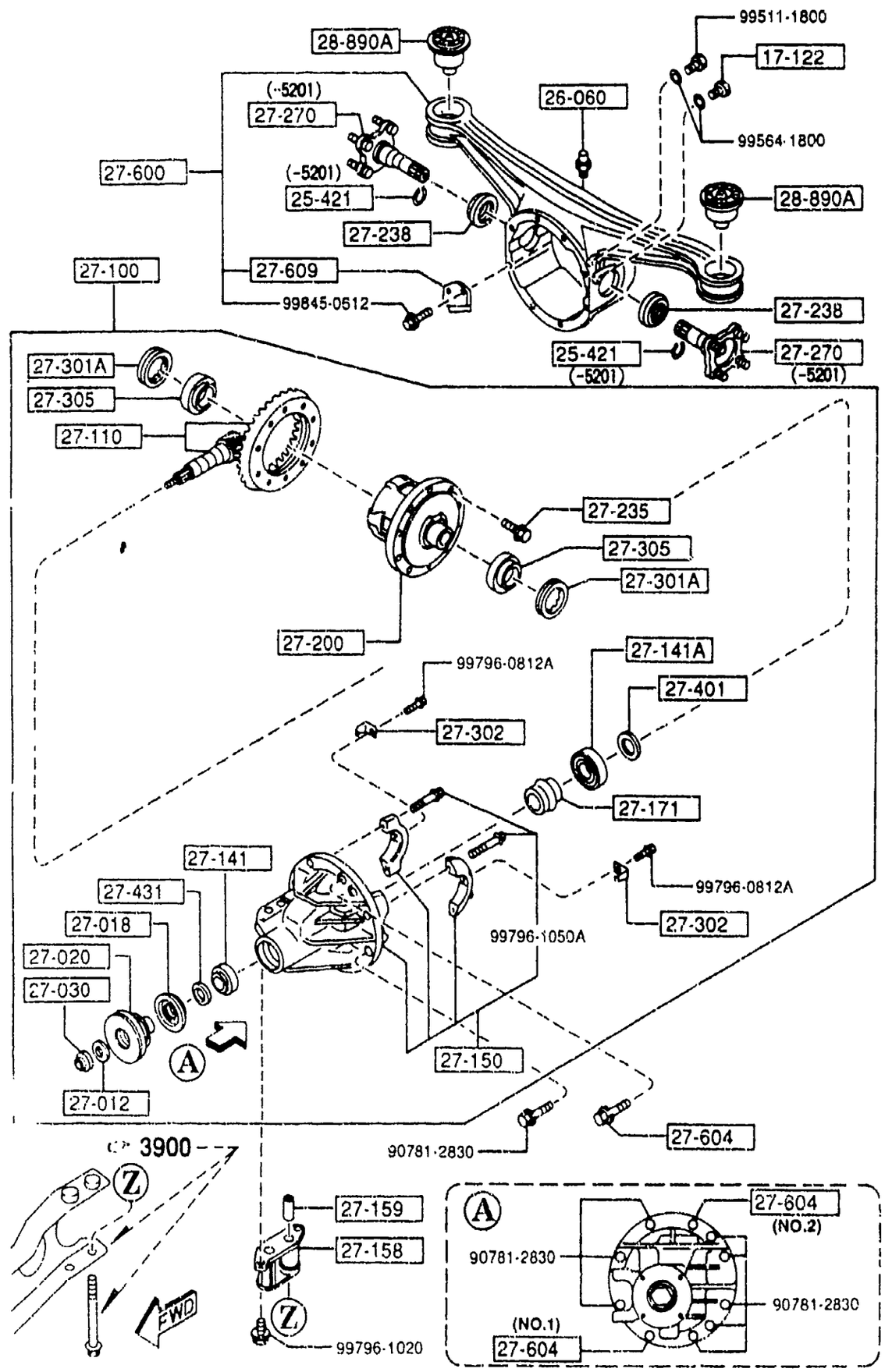






| PART NO. | QTY | MODEL/RESTRICTION | MODEL/RESTRICTION | MODEL/RESTRICTION | FROM-TO |
|---|---|---|---|---|---|
| CONT'D | | | | | |
| 0223-27-433 | 1 | T=3.425MM | | | 5301- |
| 0223-27-434 | 1 | T=3.455MM | | | 5301- |
| +----------+ | | | | | |
| \| 27-431 \| | | SPACER | | | |
| +----------+ | | | | | |
| PA01-27-431 | 1 | | | | |
| +----------+ | | | | | |
| \| 27-600 \| | | CASING,DIFFERENTIAL | | | |
| +----------+ | | | | | |
| MA02-27-600 | 1 | | | | -5201 |
| AN(MA02-27-600A) | | | | | |
| MA02-27-600A | 1 | | | | 5201- |
| +----------+ | | | | | |
| \| 27-604 \| | | BOLT,CARRIER | | | |
| +----------+ | | | | | |
| M053-27-604 | 1 | (ILLUST. NO.1) | | | |
| M053-27-605 | 1 | (ILLUST. NO 2) | | | |
| +----------+ | | | | | |
| \| 27-609 \| | | PLATE,BAFFLE-DIFF CA SING | | | |
| +----------+ | | | | | |
| M0A1-27-609A | 1 | | | | |
| +----------+ | | | | | |
| \| 28-890A \| | | RUBBER,SUB FRAME MTG | | | |
| +----------+ | | | | | |
| NA01-28-890 | 2 | | | | |

5201 NA35* -614193
5301 NA35* -616742

## 2800 REAR SUSPENSION MECHANISMS

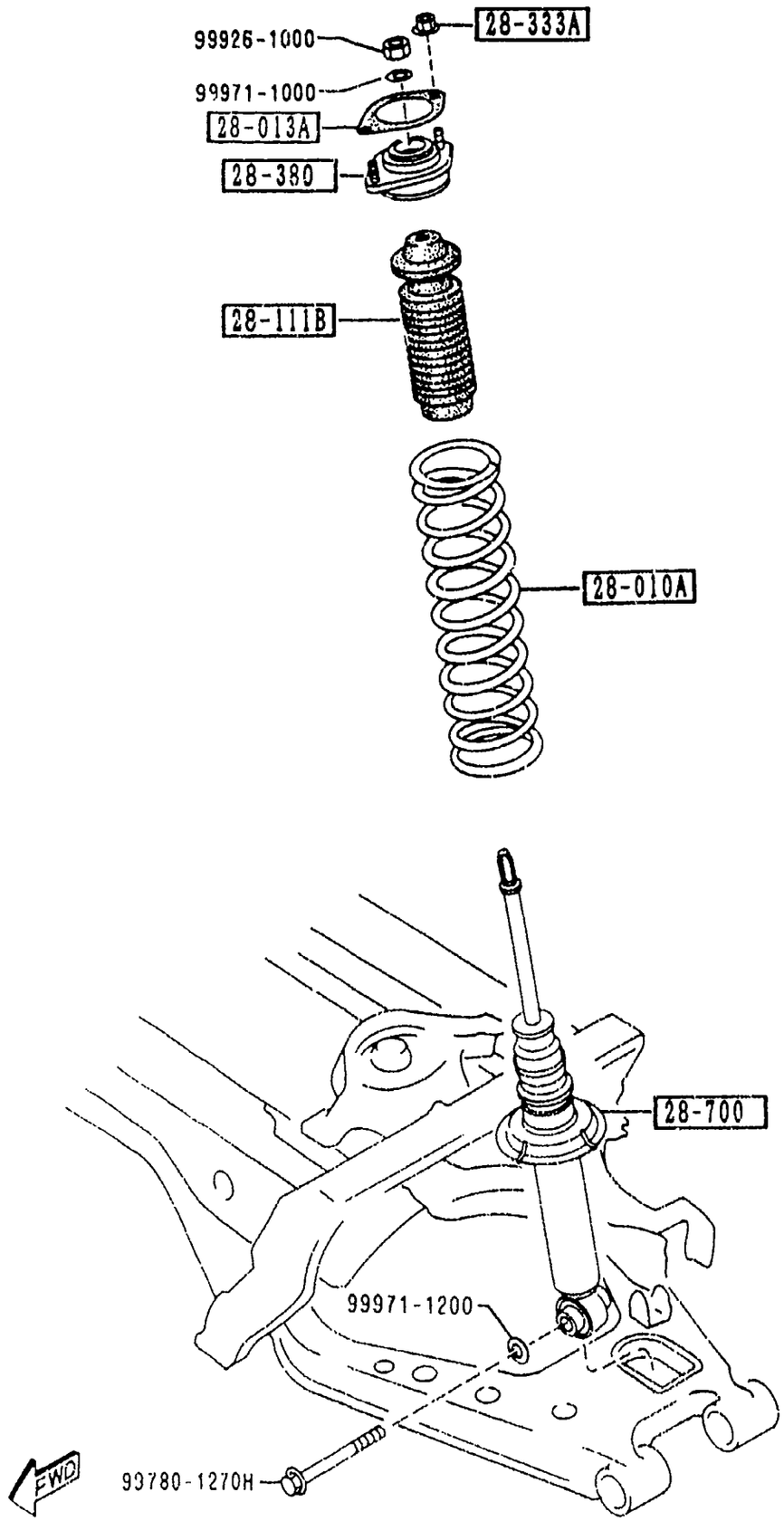


| PART NO. | QTY | MODEL/RESTRICTION | MODEL/RESTRICTION | MODEL/RESTRICTION | FROM-TO |
|---|---|---|---|---|---|
| 28-010A | | SPRING,COIL-REAR | | | |
| NA01-28-011C | 2 | ((EXC.BILSTEIN DAMP. )>(MT) ) | | | |
| NA03-28-011A | 2 | ((EXC.BILSTEIN DAMP. )>(AT) ) | | | |
| N021-28-011 | 2 | (BILSTEIN DAMP.) | | | |
| 28-013A | | SHEET,RUBBER | | | |
| G030-28-013A | 2 | | | | |
| 28-111B | | STOPPER,BUMP | | | |
| NA01-28-111 | 2 | (EXC.BILSTEIN DAMP.) | | | |
| N021-34-111 | 2 | (BILSTEIN DAMP.) | | | |
| 28-333A | | NUT,FLANGE | | | |
| H001-28-333 | 4 | | | | |
| 28-380 | | RUBBER,MOUNTING | | | |
| NA01-28-380B | 2 | | | | |
| 28-700 | | DAMPER,REAR | | | |
| N018-28-700B | 2 | (EXC.BILSTEIN DAMP.) | | | |
| N023-28-700A A (N023-28-700B) | 2 | (BILSTEIN DAMP.) | | | -5804 |
| N023-28-700B | 2 | (BILSTEIN DAMP.) | | | 5804- |

5804 NA3** -701237

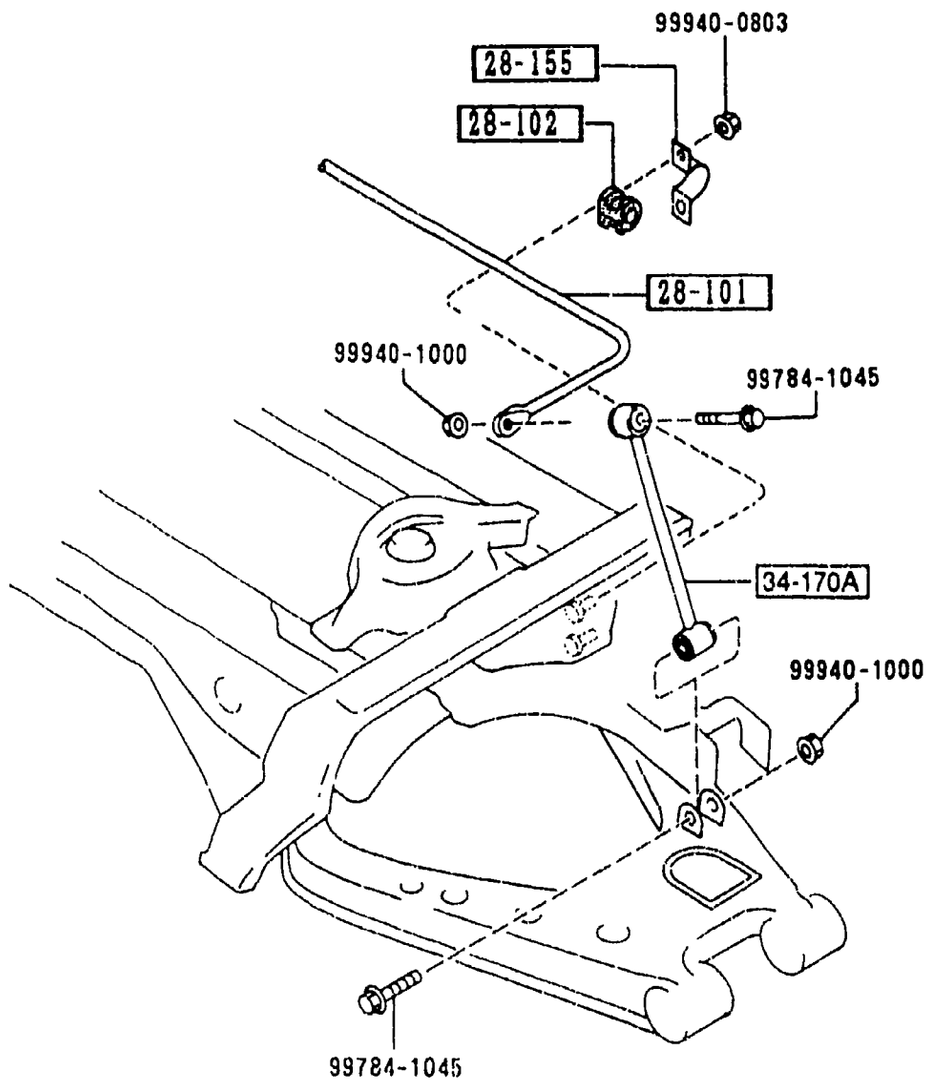


AUNA05

## 2810 -1 * REAR STABILIZER

| PART NO. | QTY | MODEL/RESTRICTION | MODEL/RESTRICTION | MODEL/RESTRICTION | FROM-TO |
|---|---|---|---|---|---|
| 28-101 | | STABILIZER,RR | | | |
| N023-28-151 | 1 | | | | |
| 28-102 | | BUSH,STABILIZER-RR | | | |
| N023-28-156 | 2 | | | | |
| 28-155 | | PLATE,STABILIZER-RR | | | |
| FB01-28-155 | 2 | | | | |
| 34-170A | | LINK,CONTROL-STAB | | | |
| NA01-34-170 | 2 | | | | |

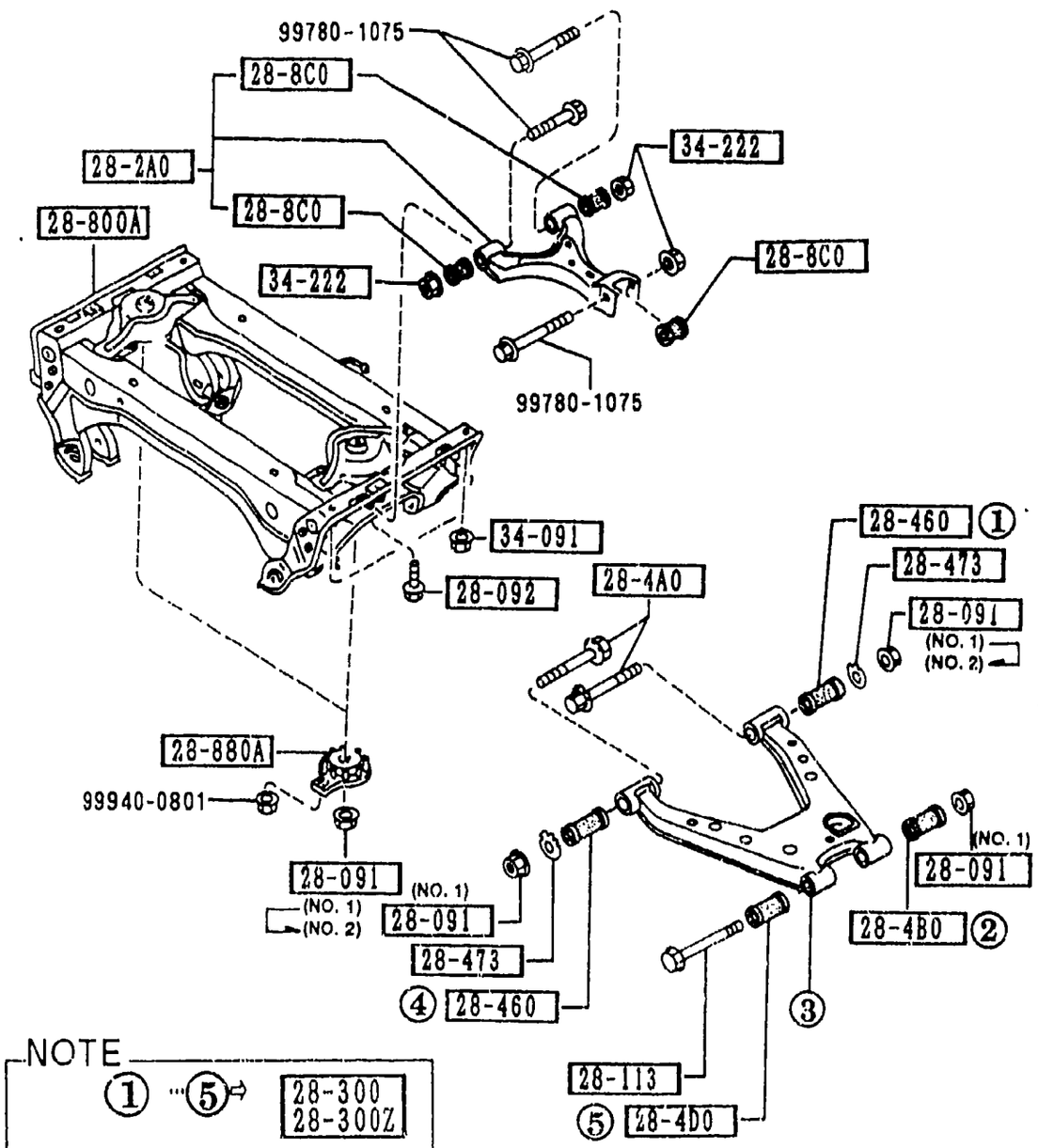


NOTE

① ···⑤ ⇨ 28-300 / 28-300Z

THE D-CODE OF 28-300 / 28-300Z CONSISTS OF FIGURE NUMBERS ① THROUGH ⑤.

FWD

## 2830 -1 REAR LOWER ARMS & SUB FRAME

| PART NO. | QTY | MODEL/RESTRICTION | MODEL/RESTRICTION | MODEL/RESTRICTION | FROM-TO |
|---|---|---|---|---|---|
| 28-091 | | NUT | | | |
| B037-28-091 | 8 | (ILLUST. NO.1) | | | -6401 |
| B037-28-091 | 4 | (ILLUST. NO.1) | | | 6401- |
| B001-39-037B | 4 | (ILLUST. NO.2) | | | 6401- |
| 28-092 | | BOLT,CONTROL LINK | | | |
| NA01-28-092 | 2 | | | | |
| 28-113 | | BOLT | | | |
| NA01-28-113 | 2 | | | | |
| 28-2A0 | | ARM,UPPER-REAR | | | |
| NA01-28-2A0B | 2 | | | | |
| 28-300 | | ARM(R),LOWER-REAR | | | |
| NA01-28-300 | 1 | | | | |
| 28-300Z | | ARM(L),LOWER-REAR | | | |
| NA01-28-350 | 1 | | | | |
| 28-4A0 | | BOLT,ADJUST | | | |
| NA01-28-4A0 | 4 | | | | |
| 28-4B0 | | BUSHING,RUBBER-LOWER ARM | | | |
| NA01-28-4B0 | 2 | | | | |
| 28-4D0 | | BUSHING,RUBBER-LOWER ARM | | | |
| NA01-28-4D0 | 2 | | | | |
| 28-460 | | BUSHING,LOWER ARM | | | |
| NA01-28-460 | 4 | | | | |
| 28-473 | | PLATE,CAM-SUB FRAME | | | |
| NA01-28-473 | 4 | | | | -6401 |
| *NA80-28-473 | 4 | | | | 6401- |
| 28-8C0 | | BUSHING,RUBBER | | | |
| NA01-28-8C0B | 6 | | | | |
| 28-800A | | MEMBER,CROSS | | | |

6401 NA3** -717787

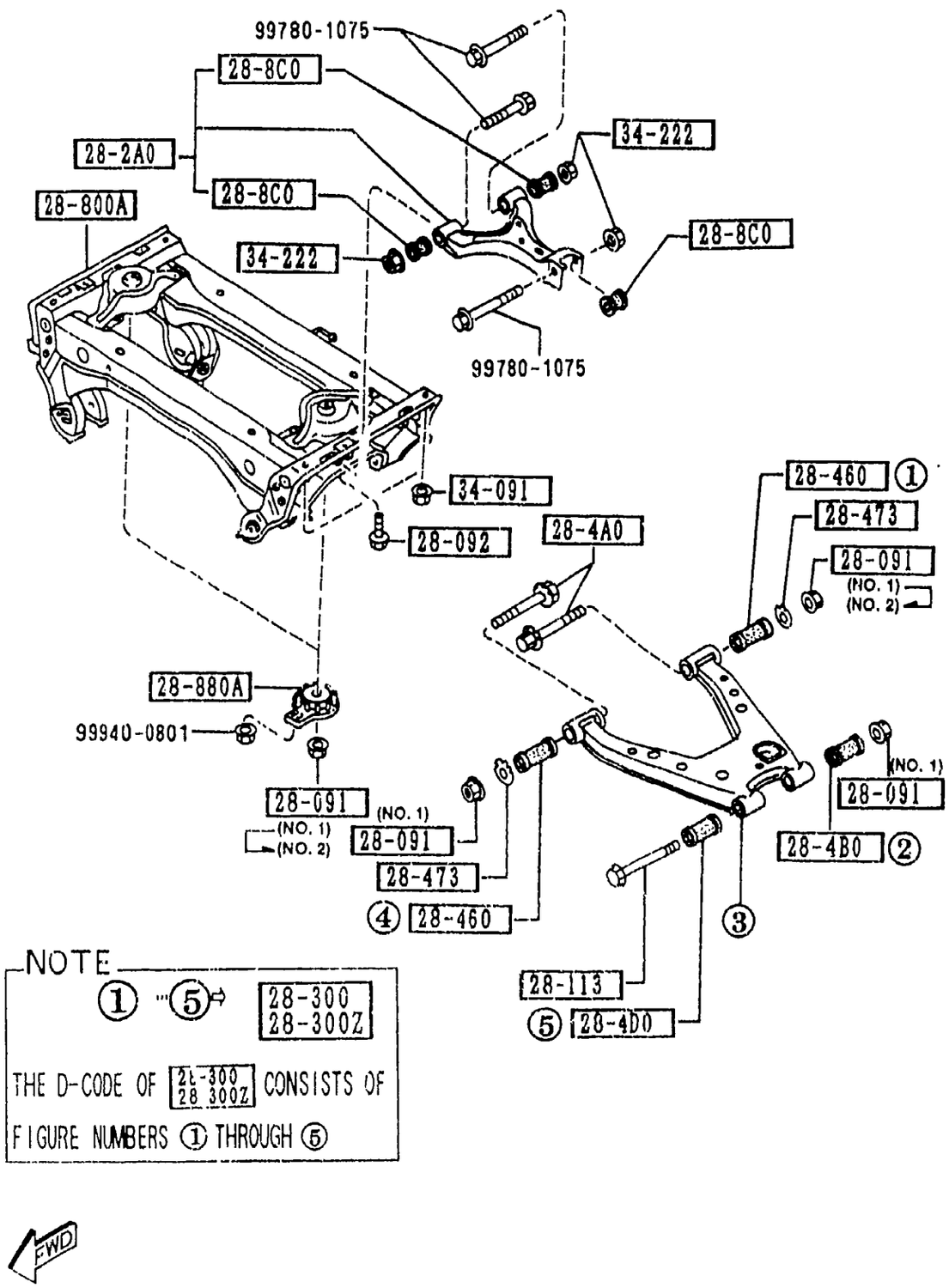


## 2830 -2 * REAR LOWER ARMS & SUB FRAME

| PART NO. | QTY | MODEL/RESTRICTION | MODEL/RESTRICTION | MODEL/RESTRICTION | FROM-TO |
|---|---|---|---|---|---|
| CONT'D | | | | | |
| NA75-28-800 | 1 | | | | |
| +---------+ | | | | | |
| \| 28-880A \| | | WASHER,STOP | | | |
| +---------+ | | | | | |
| NA01-28-880B | 2 | | | | |
| +---------+ | | | | | |
| \| 34-091 \| | | NUT | | | |
| +---------+ | | | | | |
| FB01-34-091 | 4 | | | | |
| +---------+ | | | | | |
| \| 34-222 \| | | NUT | | | |
| +---------+ | | | | | |
| 8871-34-222 | 6 | | | | |

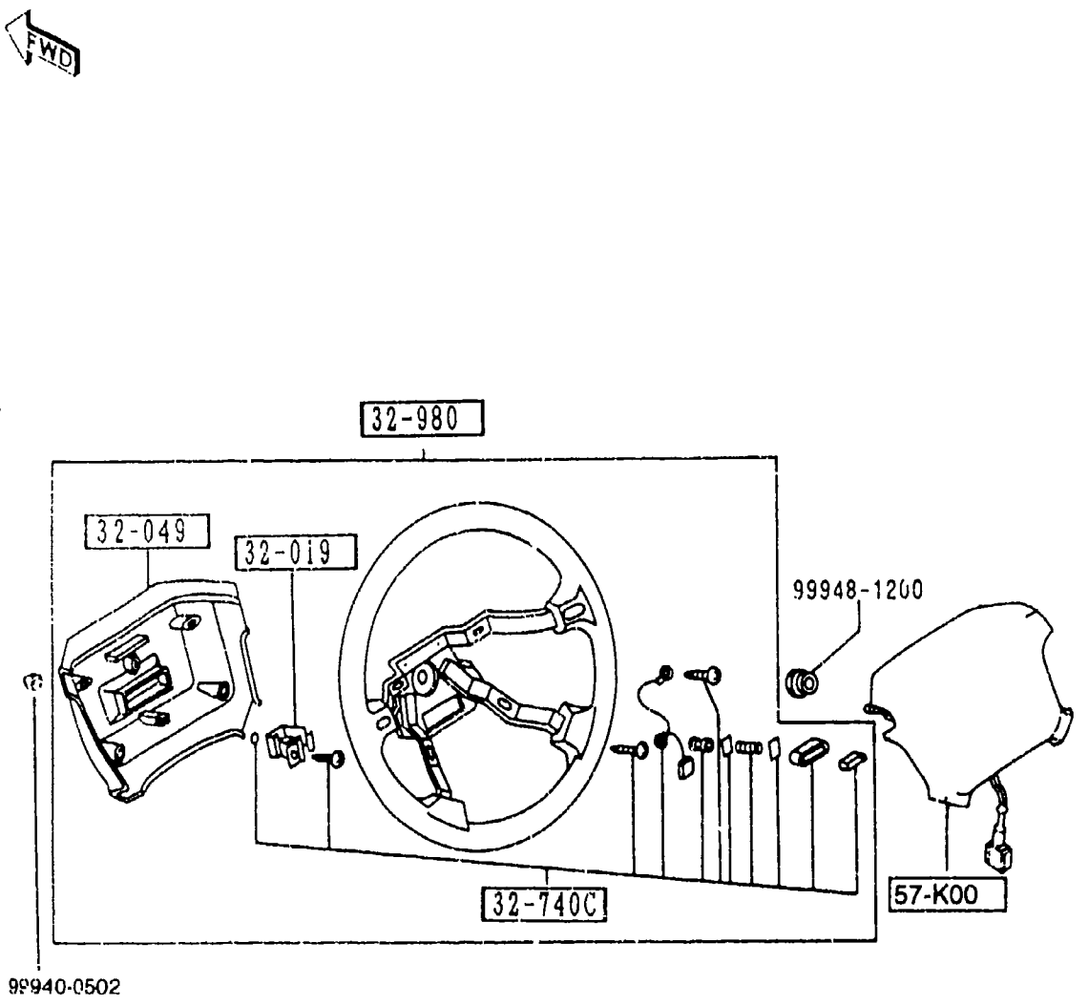


## 3200 -1 * STEERING WHEEL

| PART NO. | QTY | MODEL/RESTRICTION | MODEL/RESTRICTION | MODEL/RESTRICTION | FROM-TO |
|---|---|---|---|---|---|
| 32-019 | | BRACKET,COUPLER | | | |
| NA01-32-019 | 1 | | | | |
| 32-049 | | COVER,WHEEL CORE | | | |
| NA01-32-049 | 1 | | | | |
| 32-740C | | PARTS SET,ST. WHEEL | | | |
| NA01-32-750 | 1 | | | | |
| 32-980 | | BOSS,STEERING WHEEL | | | |
| NA01-32-980C | 1 | BASE, R-PKG, (URETHANE) ('95 MODEL) | | | |
| NA01-32-980D | 1 | BASE, R-PKG, (URETHANE) ('96 MODEL) | | | |
| NA02-32-980C | 1 | M-25-ED, P.E.GR, L-PKG, PKG-A, PKG-B, PKG-C, PKG-C, PKG-B, (LEATHER) ('95 MODEL) | | | |
| NA02-32-980D | 1 | M-25-ED, P.E.GR, L-PKG, PKG-A, PKG-B, PKG-C, PKG-C, PKG-B, (LEATHER) ('96 MODEL) | | | |
| 57-K00 | | MODULE,AIR BAG | | | |
| NB11-57-K00 | 1 | | | | |
| 00 | INT- | NA3 NA5 BLACK | | | |

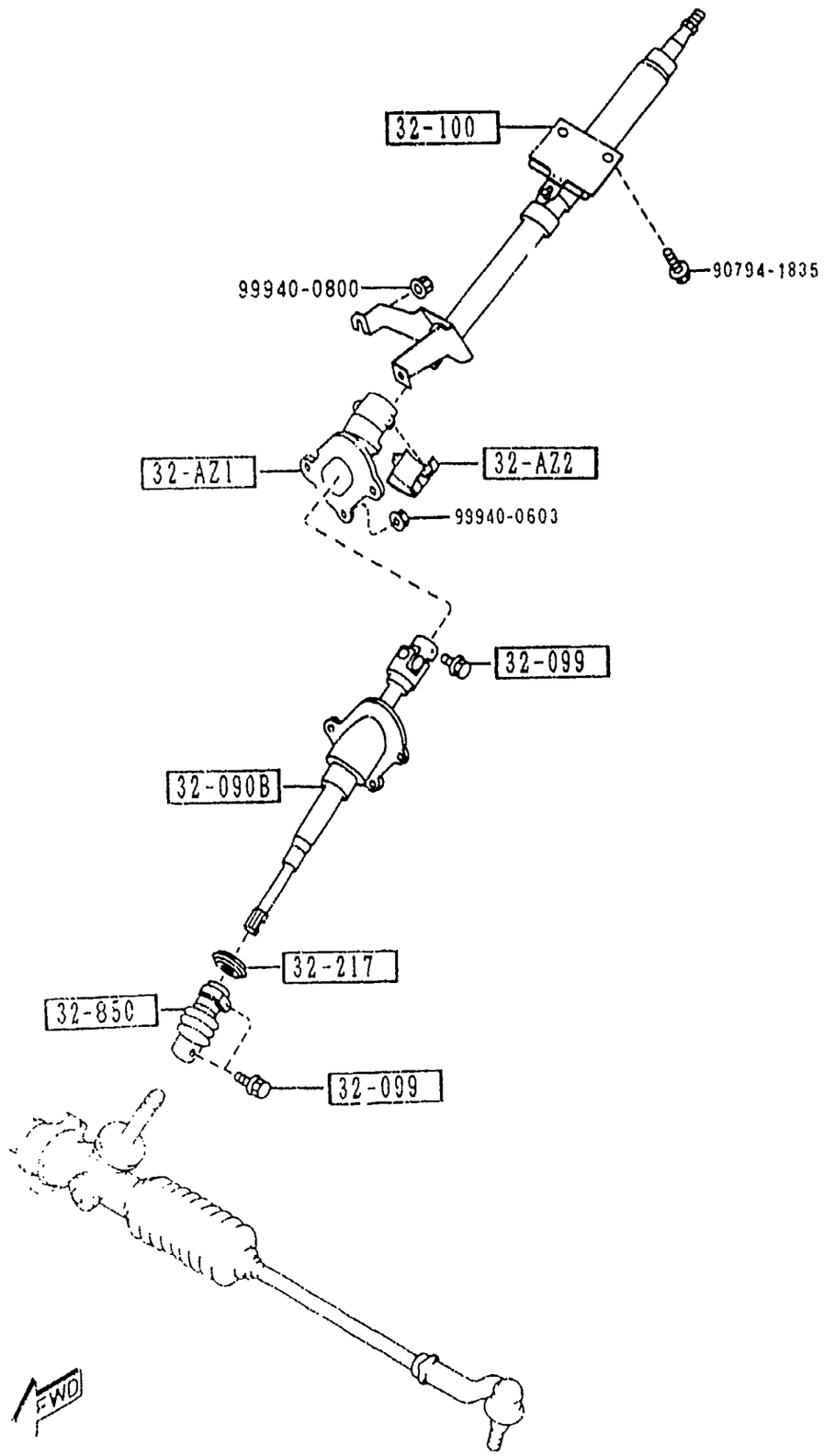


## 3210 -1 * STEERING COLUMN & SHAFTS

| PART NO. | QTY | MODEL/RESTRICTION | MODEL/RESTRICTION | MODEL/RESTRICTION | FROM-TO |
|---|---|---|---|---|---|
| 32-AZ1 | | COVER,JOINT-UPPER | | | |
| NA75-32-AZ1 | 1 | | | | |
| 32-AZ2 | | COVER,JOINT-LOWER | | | |
| NA01-32-AZ2A | 1 | | | | |
| 32-090B | | SHAFT,INTERMED. | | | |
| NA01-32-090C | 1 | BASE, R-PKG, (W/O POWER STEERING) | | | |
| NA02-32-090C | 1 | M-25-ED, P.E.GR, L-PKG, PKG-A, PKG-B, PKG-C, (W/POWER STEERING) | | | |
| 32-099 | | BOLT,SHAFT | | | |
| B455-32-099 | 3 | | | | |
| 32-100 | | SHAFT,ENGY.ABSORBER | | | |
| NA75-32-100A | 1 | | | | |
| 32-217 | | GROMMET | | | |
| NA01-32-217 | 1 | | | | |
| 32-850 | | JOINT,STEERING | | | |
| NA01-32-850A | 1 | | | | -6301 |
| *NA01-32-850B | 1 | | | | 6301- |

6301 NA3** -714662

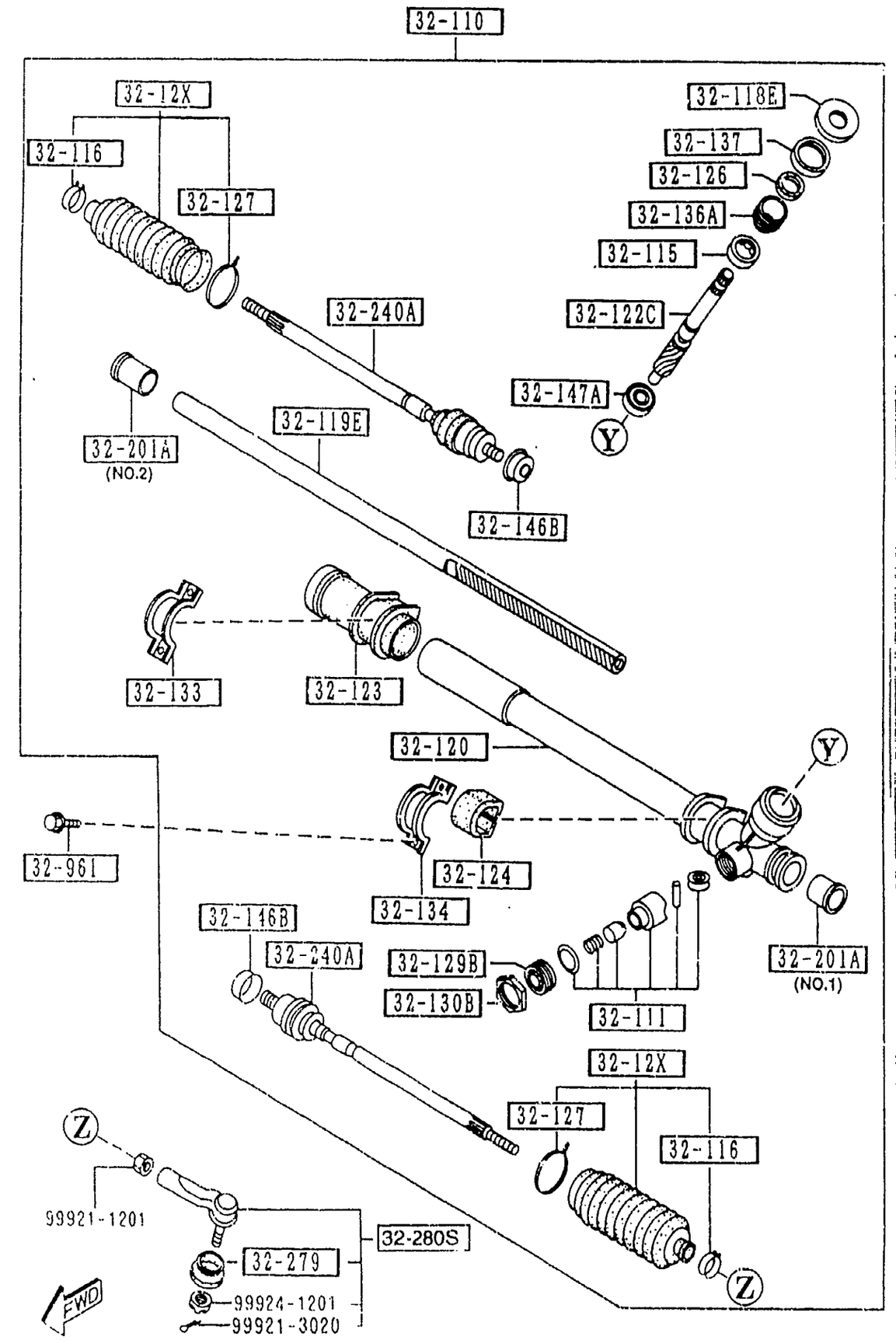






| PART NO. | QTY | MODEL/RESTRICTION | MODEL/RESTRICTION | MODEL/RESTRICTION | FROM-TO |
|---|---|---|---|---|---|
| 32-110<br>NA01-32-110 | 1 | GEAR,STEERING | | | |
| 32-111<br>GJ21-32-111 | 1 | YOKE,SUPPORT | | | |
| 32-115<br>G030-32-115 | 1 | BEARING,ST. GEAR | | | |
| 32-116<br>BF67-32-116 | 2 | CLIP,SEAL | | | |
| 32-118E<br>NA01-32-118 | 1 | COVER,DUST-ST. GEAR | | | |
| 32-119E<br>NA01-32-119 | 1 | RACK,STEERING GEAR | | | |
| 32-12X<br>NA01-32-12X | 2 | BOOT SET,ST. GEAR | | | |
| 32-120<br>NA01-32-120 | 1 | HOUSING,GEAR | | | |
| 32-122C<br>NA01-32-122 | 1 | PINION,STEERING GEAR | | | |
| 32-123<br>NA01-32-123 | 1 | RUBBER,MOUNTING | | | |
| 32-124<br>NA01-32-124 | 1 | RUBBER,MOUNTING | | | |
| 32-126<br>G030-32-126 | 1 | SEAL,SHAFT | | | |
| 32-127<br>G030-32-127 | 2 | CLIP,WIRE | | | |
| 32-129B<br>HE01-32-129 | 1 | PLUG,PINION | | | |

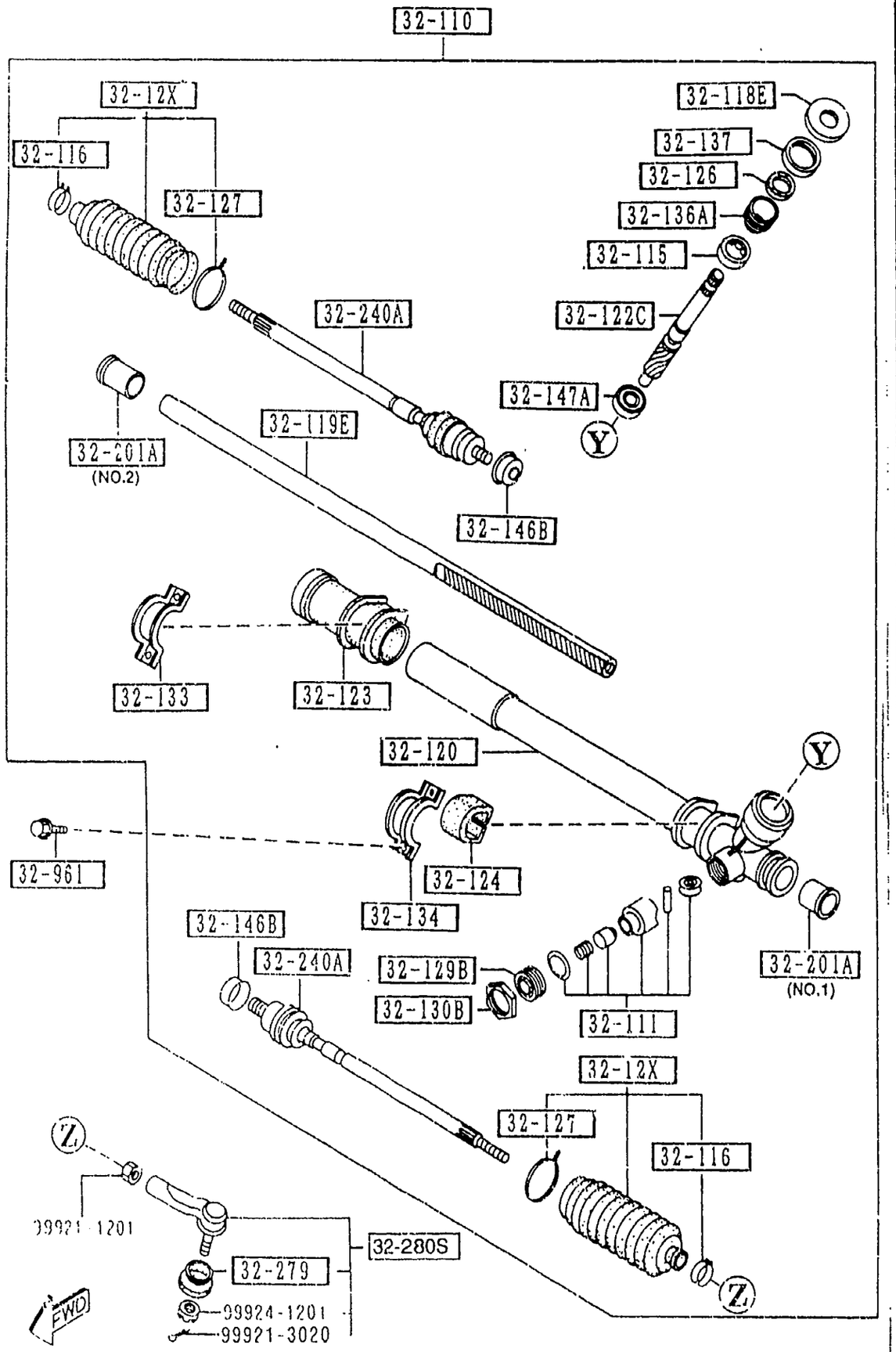






| PART NO. | QTY | MODEL/RESTRICTION | MODEL/RESTRICTION | MODEL/RESTRICTION | FROM-TO |
|---|---|---|---|---|---|
| 32-130B | | NUT,LOCK | | | |
| S083-32-137 | 1 | | | | |
| 32-133 | | PLATE,CLAMP | | | |
| BC51-32-133 | 1 | | | | |
| 32-134 | | PLATE,CLAMP | | | |
| NA01-32-134 | 1 | | | | |
| 32-136A | | COVER,REAR | | | |
| G030-32-136 | 1 | | | | |
| 32-137 | | NUT,LOCK | | | |
| S030-32-137 | 1 | | | | |
| 32-146B | | WASHER | | | |
| HA14-32-146 | 2 | | | | |
| 32-147A | | BEARING,PINION | | | |
| G030-32-147 | 1 | | | | |
| 32-201A | | BUSHING,RACK-ST. GEAR | | | |
| HE01-32-201 | 1 | (ILLUST. NO.1) | | | |
| HE09-32-201 | 1 | (ILLUST. NO.2) | | | |
| 32-240A | | JOINT,BALL | | | |
| NA01-32-240 | 2 | | | | |
| 32-279 | | SEAL,DUST-BALL JOINT | | | |
| B455-32-279 | 2 | | | | |
| 32-280S | | JOINT SET,BALL | | | |
| BAN1-32-280 | 2 | | | | |
| 32-961 | | BOLT | | | |
| G030-32-961 | 4 | | | | |

('95 MODEL)

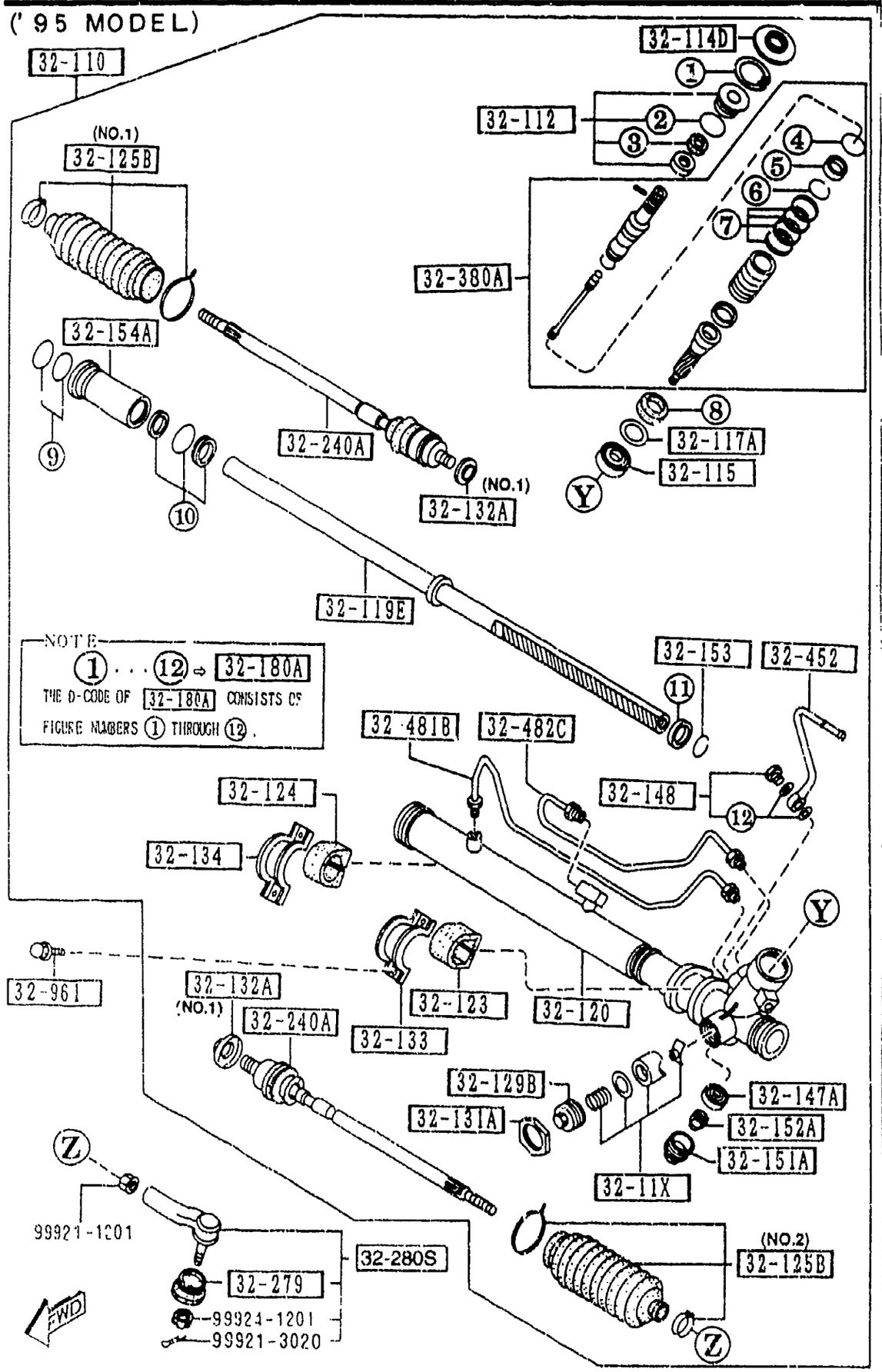


AUNA05



('96 MODEL)

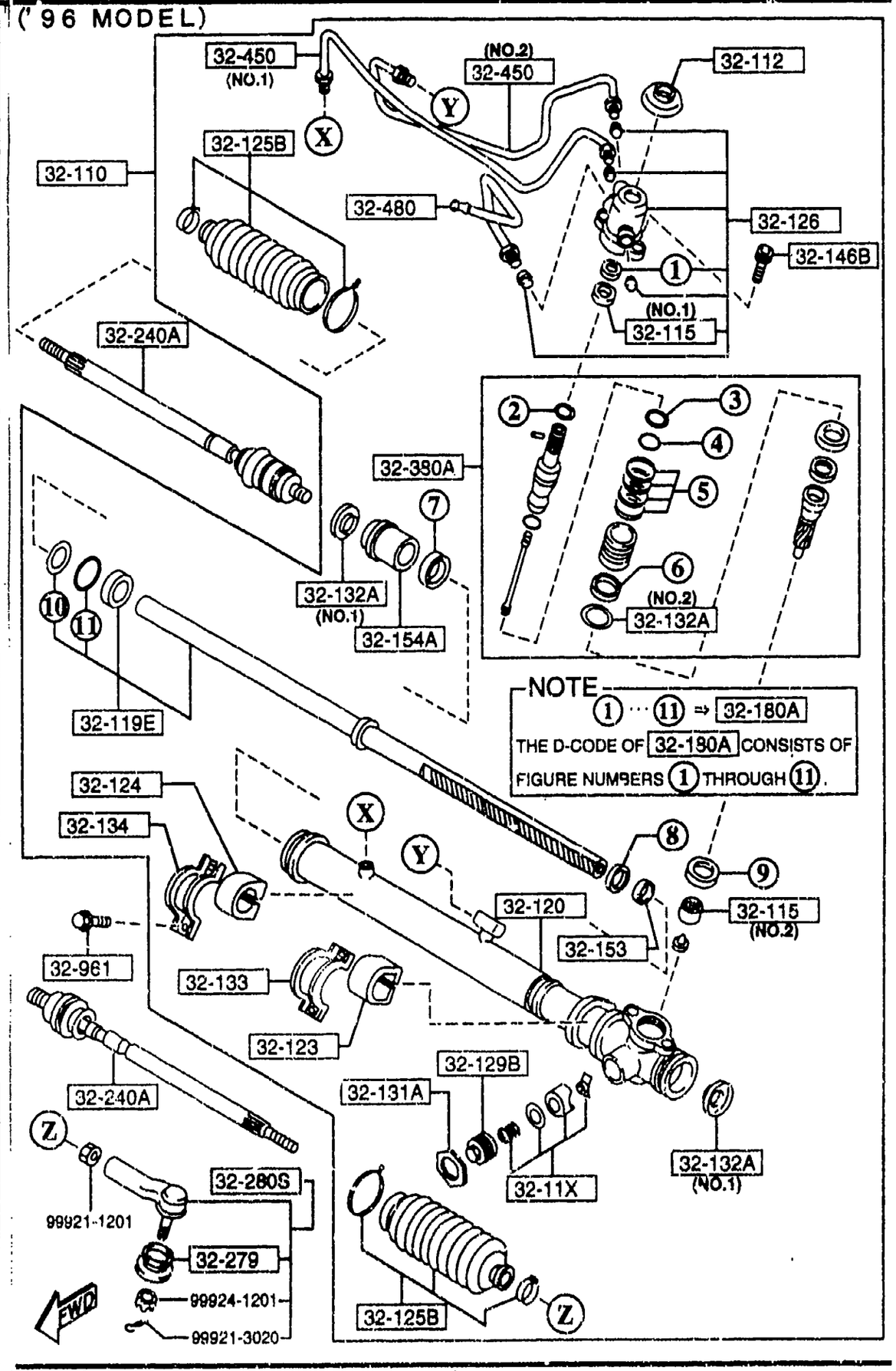


AUNA05

('95 MODEL)

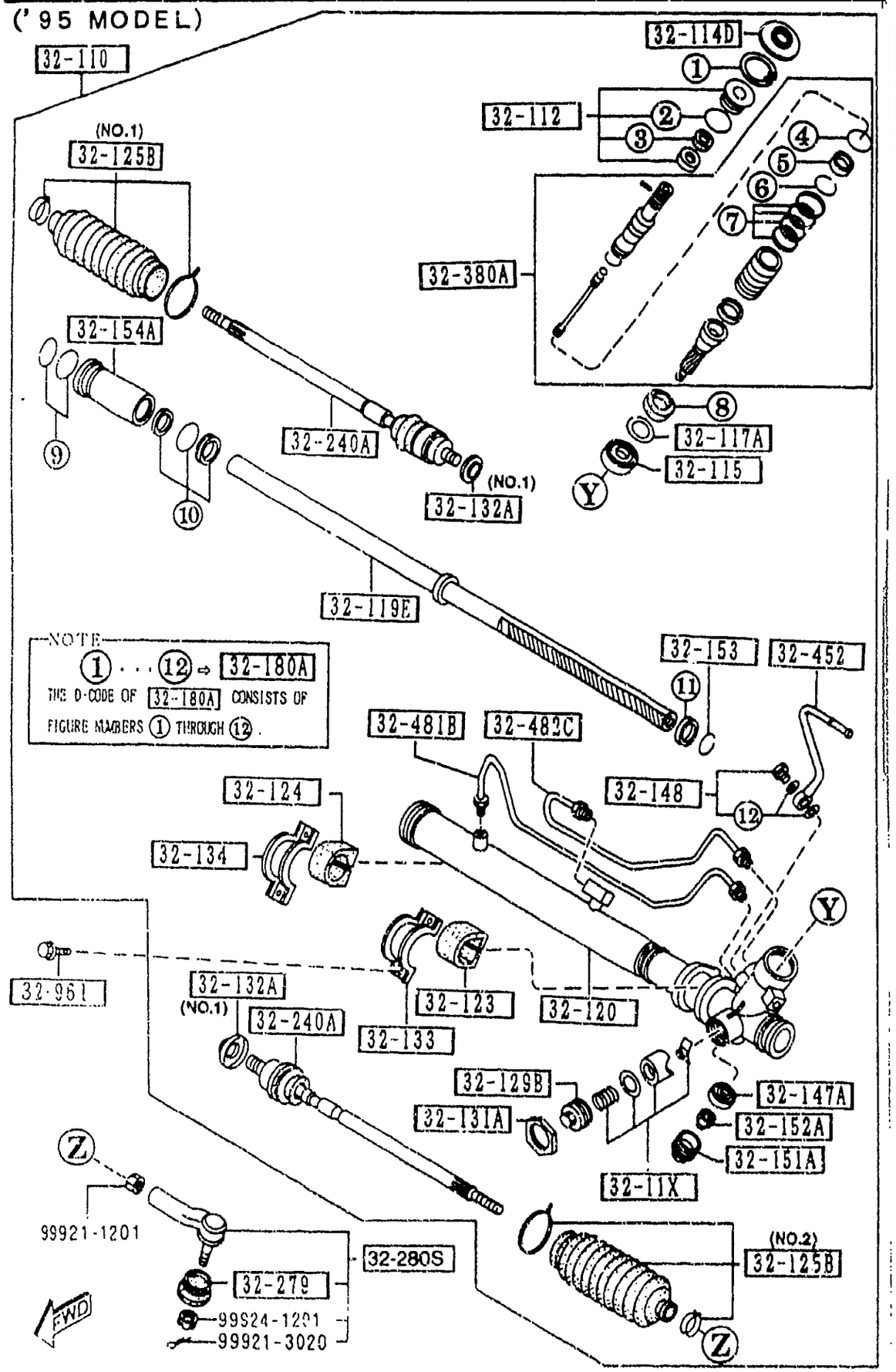


3220 A-1 STEERING GEAR
(W/POWER STEERING)

| PART NO. | QTY | MODEL/RESTRICTION | MODEL/RESTRICTION | MODEL/RESTRICTION | FROM-TO |
|---|---|---|---|---|---|
| 32-11X | | YOKE SET,SUPPORT-ST. GEAR | | | |
| NA02-32-11X | 1 | | | | |
| 32-110 | | GEAR,STEERING | | | |
| NA02-32-110 | 1 | ('95 MODEL) | | | |
| NB38-32-110B | 1 | ('96 MODEL) | | | |
| 32-112 | | COVER,DUST | | | |
| NA02-32-112 | 1 | ('95 MODEL) | | | |
| NB38-32-112 | 1 | ('96 MODEL) | | | |
| 32-114D | | COVER,DUST-ST. GEAR | | | |
| NA02-32-114 | 1 | ('95 MODEL) | | | |
| 32-115 | | BEARING,ST. GEAR | | | |
| NA02-32-115 | 1 | ('95 MODEL) | | | |
| NB38-32-115 | 1 | (ILLUST. NO.1) ('96 MODEL) | | | |
| NB39-32-115 | 1 | (ILLUST. NO.2) ('96 MODEL) | | | |
| 32-117A | | SPACER,STEERING GEAR | | | |
| NA02-32-121 | 1 | ('95 MODEL) | | | |
| 32-119E | | RACK,STEERING GEAR | | | |
| NA02-32-119 | 1 | ('95 MODEL) | | | |
| NB38-32-119 | 1 | ('96 MODEL) | | | |
| 32-120 | | HOUSING,GEAR | | | |
| NA02-32-120 | 1 | ('95 MODEL) | | | |
| NB38-32-120 | 1 | ('96 MODEL) | | | |
| 32-123 | | RUBBER,MOUNTING | | | |
| NA02-32-123 | 1 | | | | |
| 32-124 | | RUBBER,MOUNTING | | | |
| NA02-32-124 | 1 | | | | |
| 32-125B | | BOOT,RACK | | | |
| NA02-32-125 | 1 | (ILLUST. NO.1) ('95 MODEL) | | | |

('96 MODEL)

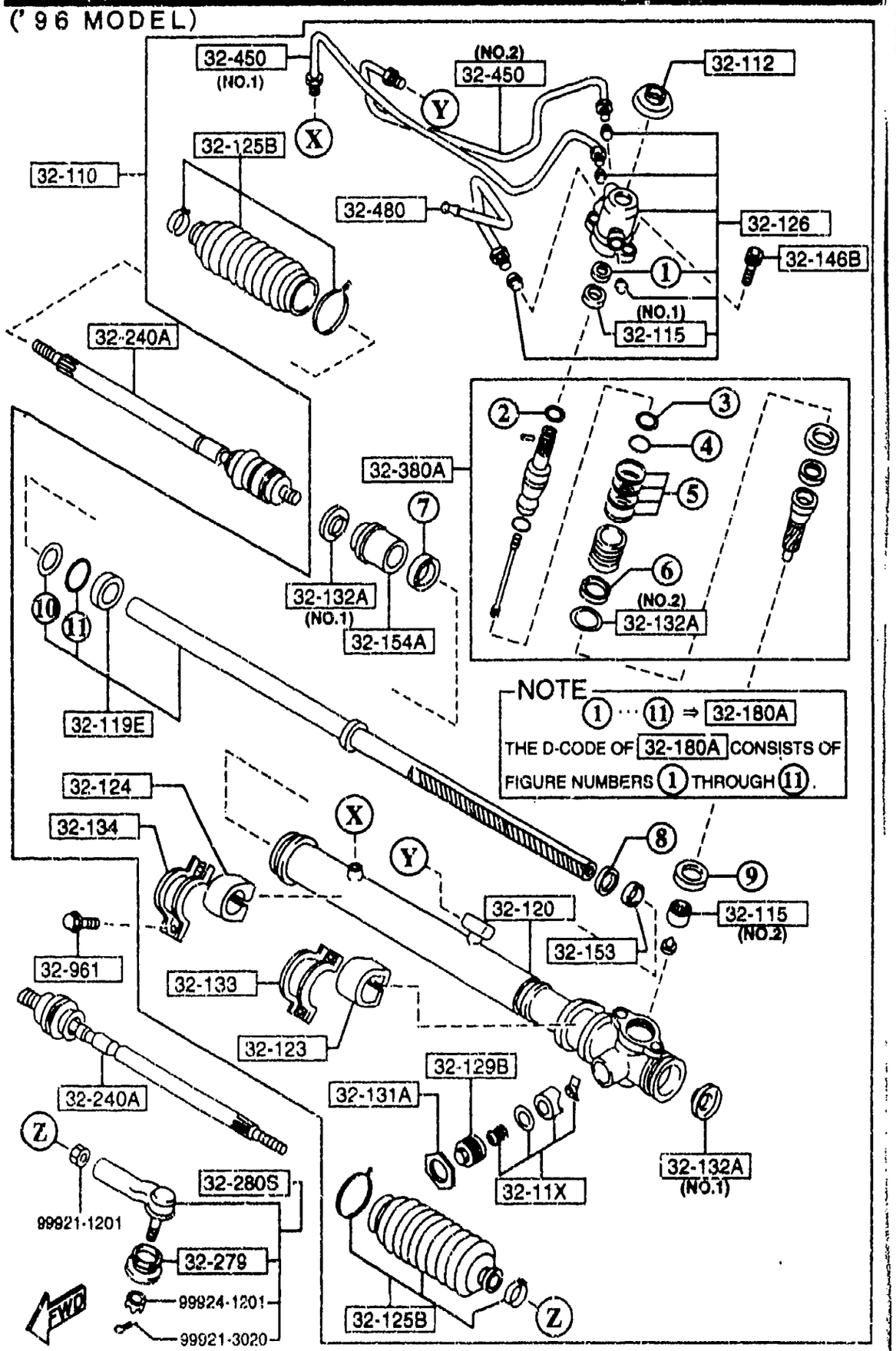


AUNA05

3220 A-2 STEERING GEAR
(W/POWER STEERING)

| PART NO. | QTY | MODEL/RESTRICTION | MODEL/RESTRICTION | MODEL/RESTRICTION | FROM-TO |
|---|---|---|---|---|---|
| CONT'D | | | | | |
| NB38-32-125 | 2 | ('96 MODEL) | | | |
| NA02-32-135 | 1 | (ILLUST. NO.2) ('95 MODEL) | | | |
| 32-126 | | SEAL,SHAFT | | | |
| NB38-32-126 | 1 | ('96 MODEL) | | | |
| 32-129B | | PLUG,PINION | | | |
| NA02-32-129 | 1 | | | | |
| 32-131A | | NUT,LOCK-RACK | | | |
| NA02-32-131 | 1 | | | | |
| 32-132A | | WASHER | | | |
| NA02-32-126 | 2 | (ILLUST. NO.1) | | | |
| NB38-32-132 | 1 | (ILLUST. NO.2) ('96 MODEL) | | | |
| 32-133 | | PLATE,CLAMP | | | |
| NA02-32-133 | 1 | ('95 MODEL) | | | |
| NB38-32-133 | 1 | ('96 MODEL) | | | |
| 32-134 | | PLATE,CLAMP | | | |
| D002-32-134 | 1 | ('96 MODEL) | | | |
| NA02-32-134 | 1 | ('95 MODEL) | | | |
| 32-146B | | WASHER | | | |
| NB38-32-146 | 2 | ('96 MODEL) | | | |
| 32-147A | | BEARING,PINION | | | |
| NA02-32-147 | 1 | ('95 MODEL) | | | |
| 32-148 | | EYE BOLT KIT,ST. GEAR | | | |
| D002-32-148 | 1 | ('95 MODEL) | | | |
| 32-151A | | PLUG,PINION-ST.GEAR | | | |
| NA02-32-151 | 1 | ('95 MODEL) | | | |
| 32-152A | | NUT,ADJUST | | | |
| NA02-32-152 | 1 | ('95 MODEL) | | | |

('95 MODEL)

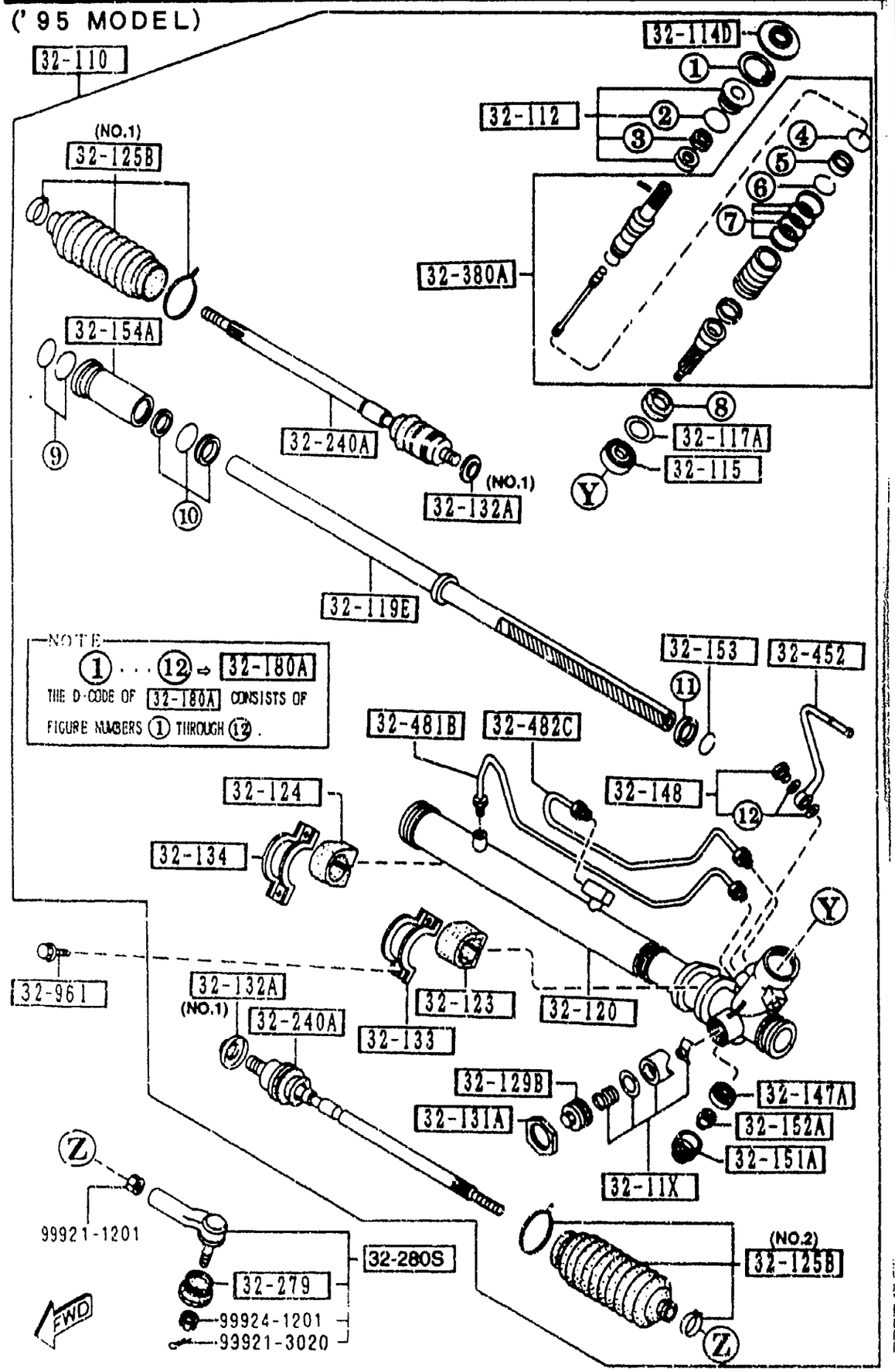


3220 A-3 STEERING GEAR (W/POWER STEERING)

| PART NO. | QTY | MODEL/RESTRICTION | MODEL/RESTRICTION | MODEL/RESTRICTION | FROM-TO |
|---|---|---|---|---|---|
| 32-153 | | RING,BACK UP | | | |
| NA02-32-153 | 1 | | | | |
| 32-154A | | HOLDER,STEERING GEAR | | | |
| NA02-32-154 | 1 | ('95 MODEL) | | | |
| NB38-32-154 | 1 | ('96 MODEL) | | | |
| 32-180A | | SEAL KIT,ST. GEAR | | | |
| NA02-32-180 | 1 | ('95 MODEL) | | | |
| NB38-32-180 | 1 | ('96 MODEL) | | | |
| 32-240A | | JOINT,BALL | | | |
| NA02-32-240 | 2 | | | | |
| 32-279 | | SEAL,DUST-BALL JOINT | | | |
| B455-32-279 | 2 | | | | |
| 32-280S | | JOINT SET,BALL | | | |
| 8AN1-32-280 | 2 | | | | |
| 32-380A | | VALVE,ST. GEAR | | | |
| NA02-32-380 | 1 | ('95 MODEL) | | | |
| NB38-32-380 | 1 | ('96 MODEL) | | | |
| 32-450 | | PIPE,PRESSURE | | | |
| NB38-32-450 | 1 | (ILLUST. NO.1) ('96 MODEL) | | | |
| NB39-32-450 | 1 | (ILLUST. NO.2) ('96 MODEL) | | | |
| 32-452 | | PIPE'B',ST. GEAR | | | |
| NA02-32-452 | 1 | ('95 MODEL) | | | |
| 32-480 | | PIPE,RETURN | | | |
| NB38-32-480A | 1 | ('96 MODEL) | | | |
| 32-481B | | PIPE'A',CYLINDER | | | |
| NA02-32-481 | 1 | ('95 MODEL) | | | |
| 32-482C | | PIPE'B',CYLINDER | | | |
| NA02-32-482 | 1 | ('95 MODEL) | | | |

('96 MODEL)

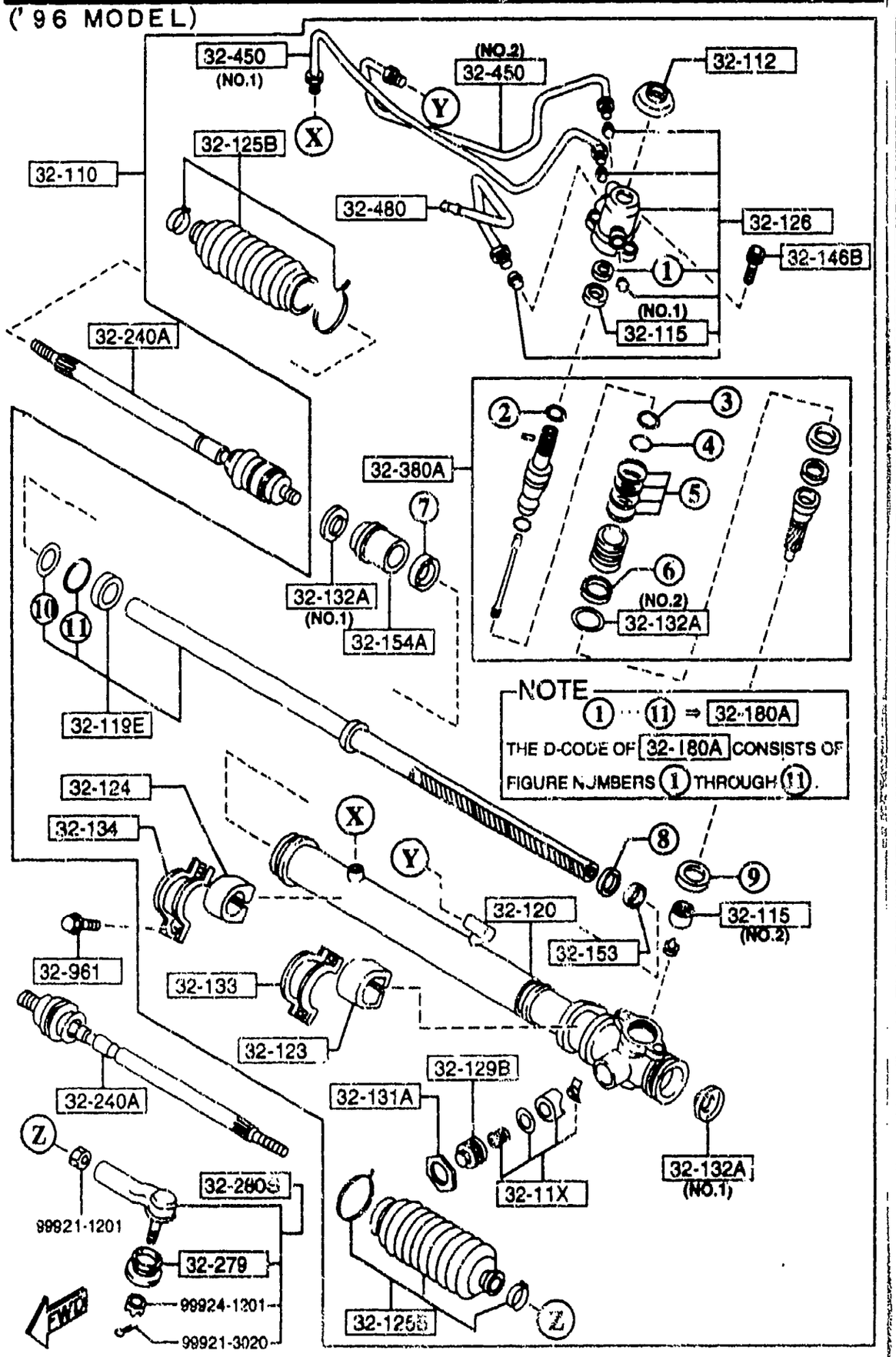


3220 A-4 * STEERING GEAR
(W/POWER STEERING)

| PART NO. | QTY | MODEL/RESTRICTION | MODEL/RESTRICTION | MODEL/RESTRICTION | FROM-TO |
|---|---|---|---|---|---|
| +---------+ \| 32-961 \| +---------+ 0030-32-961 | 4 | BOLT | | | |

( 95 MODEL)

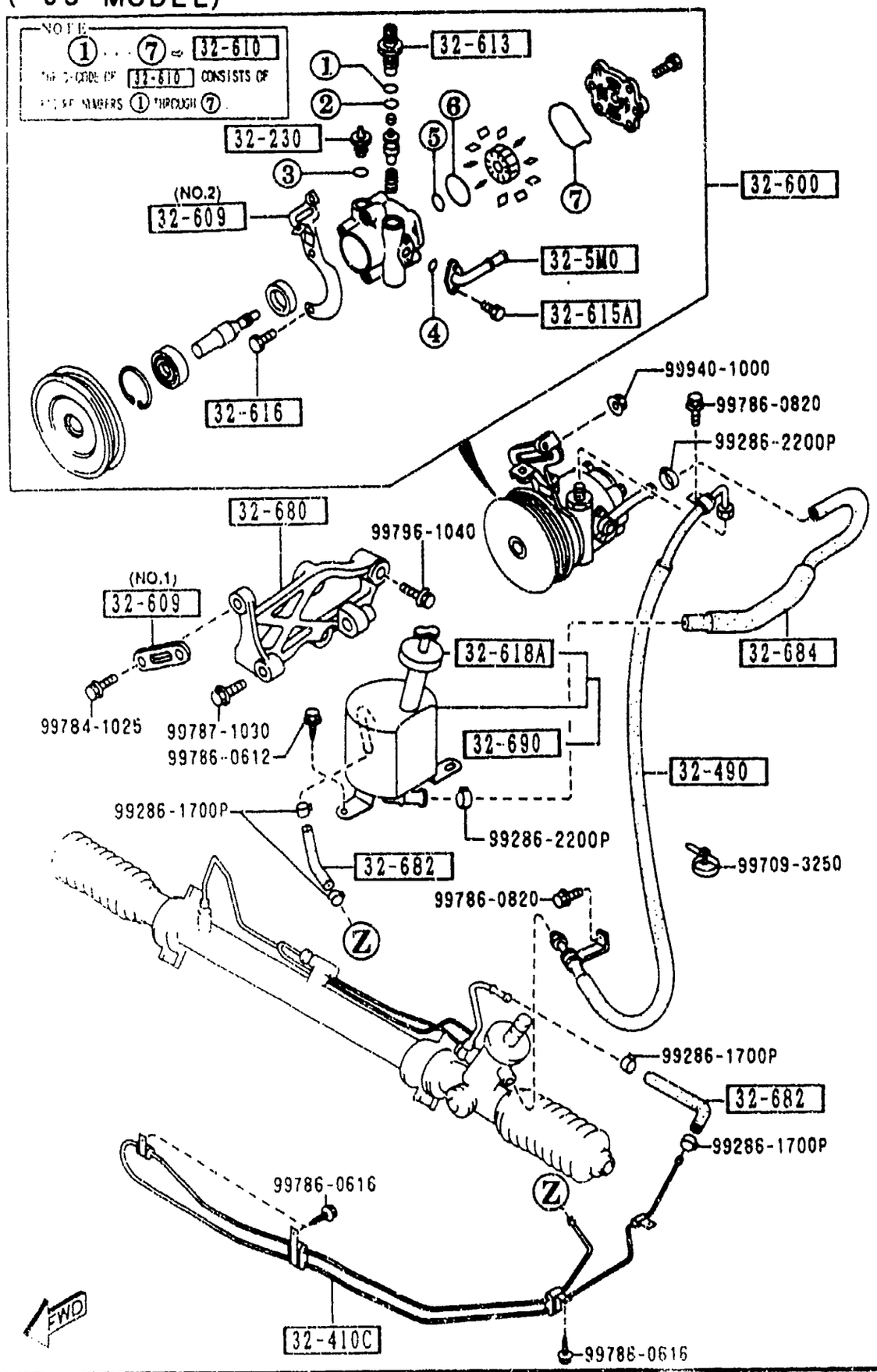


AUNA05



( 96 MODEL)

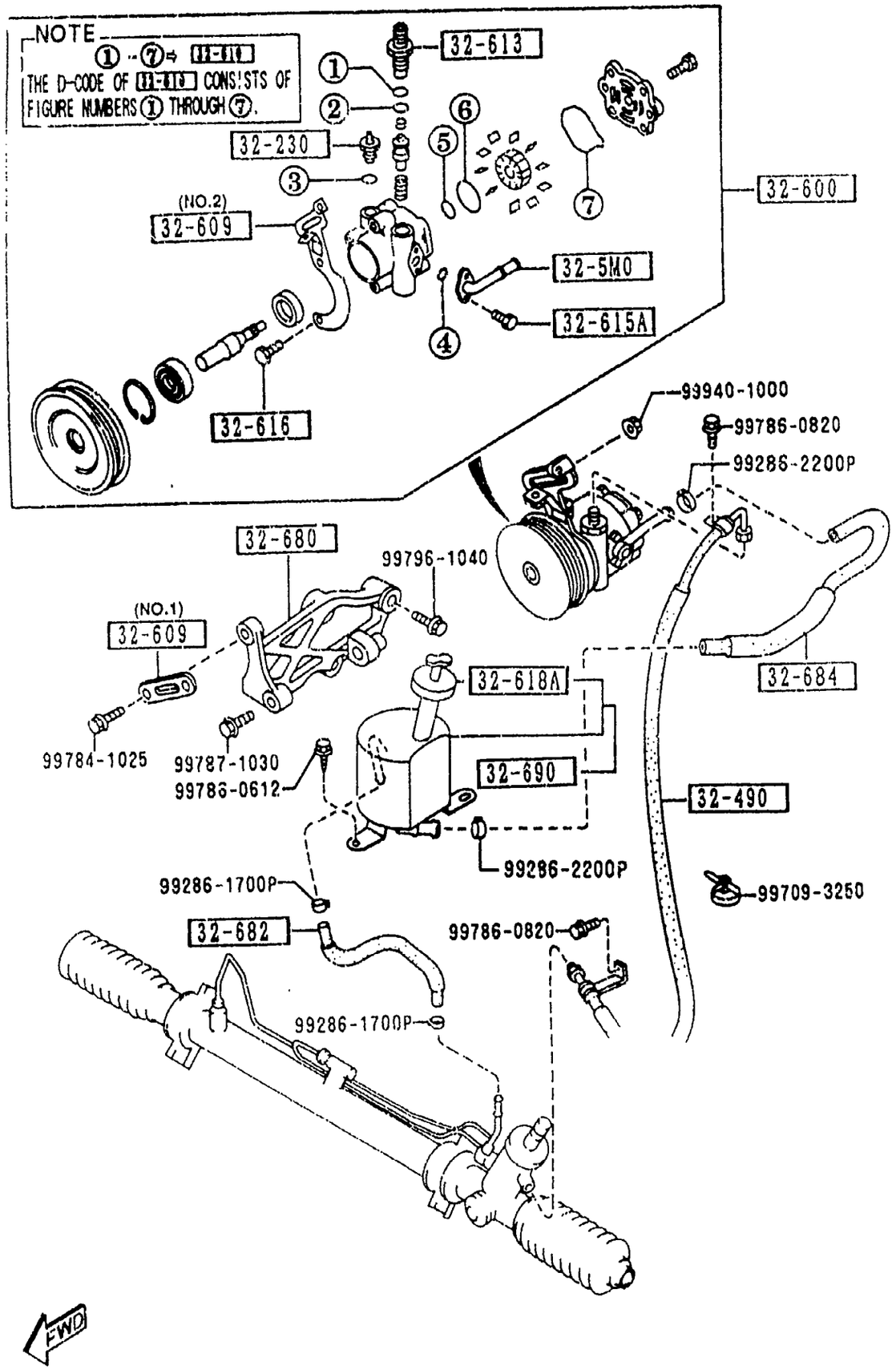


AUNA05

## 3240 POWER STEERING SYSTEM (1/2)

('95 MODEL)

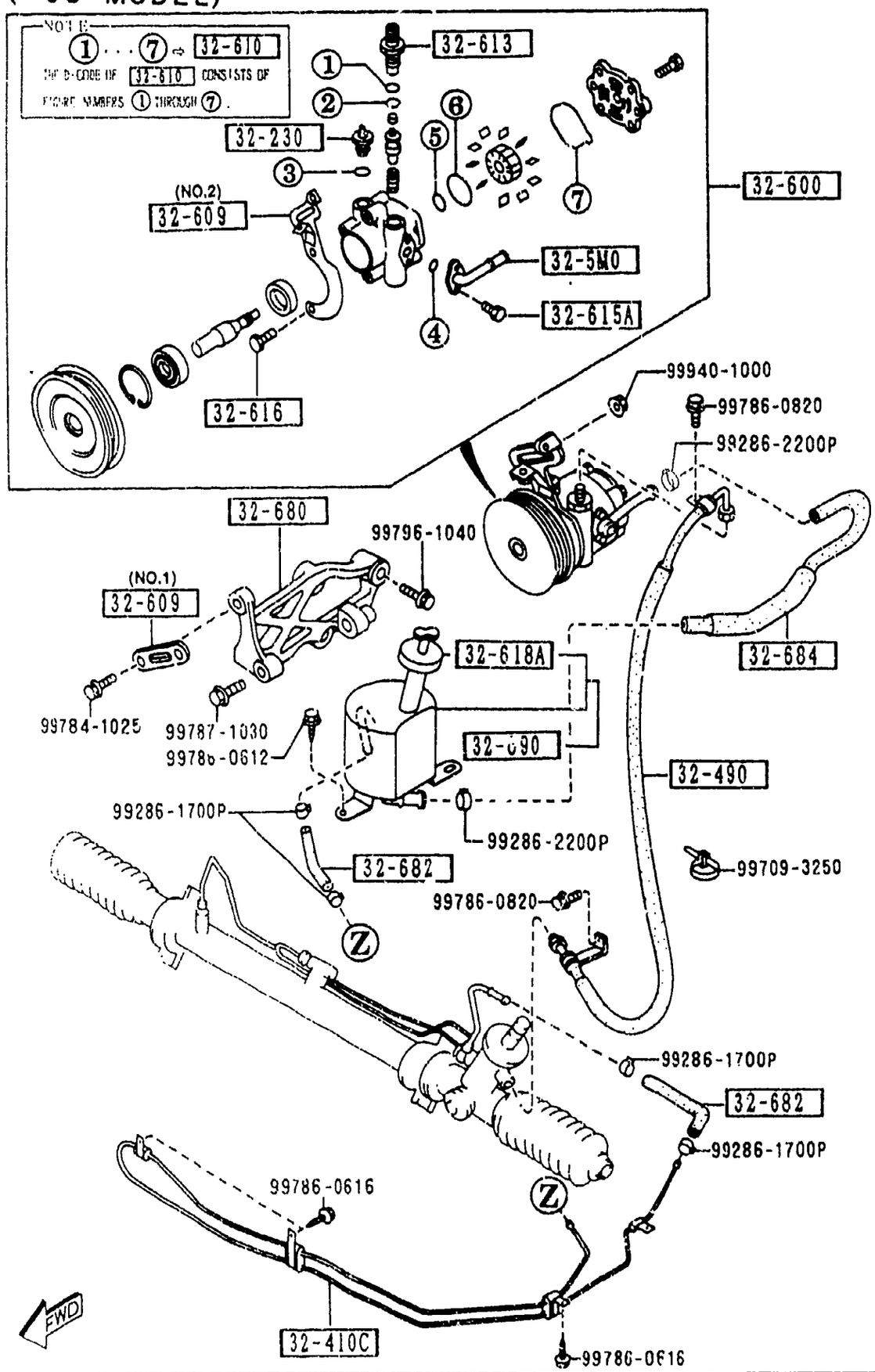


| PART NO. | QTY | MODEL/RESTRICTION | MODEL/RESTRICTION | MODEL/RESTRICTION | FROM-TO |
|---|---|---|---|---|---|
| 32-230 | | SENSOR,STEERING PRESSURE | | | |
| B456-32-230 | 1 | | | | -5901 |
| B456-32-230A | 1 | | | | 5901- |
| 32-410C | | PIPE,RETURN | | | |
| NA02-32-410A | 1 | ('95 MODEL) | | | |
| 32-490 | | HOSE,PRESSURE | | | |
| NA02-32-490C | 1 | | | | |
| 32-5M0 | | PIPE,SUCTION | | | |
| N002-32-5M0 | 1 | | | | -5901 |
| N002-32-5M0A | 1 | | | | 5901- |
| 32-600 | | PUMP,VANE | | | |
| N002-32-600B AI (N002-32-600D) | 1 | | | | -5901 |
| N002-32-600D | 1 | | | | 5901- |
| 32-609 | | BRACKET,VANE PUMP | | | |
| NA02-32-609 | 1 | KUROISHI TEKKO (ILLUST. NO.1) | | | |
| N002-32-609 | 1 | NIHON POWER STEERING (ILLUST. NO.2) | | | |
| 32-610 | | SEAL KIT,VANE PUMP | | | |
| N002-32-610 | 1 | | | | -5901 |
| N002-32-610A | 1 | | | | 5901- |
| 32-613 | | NIPPLE,VANE PUMP | | | |
| N002-32-613 | 1 | | | | |
| 32-615A | | BOLT | | | |
| B456-32-615 | 2 | | | | |
| 32-616 | | BOLT,VANE PUMP | | | |
| B456-32-616 | 2 | | | | |
| 32-618A | | CAP,VANE PUMP TANK | | | |
| NA02-32-691 | 1 | | | | |

5901 NA3** -702989

## ('96 MODEL)

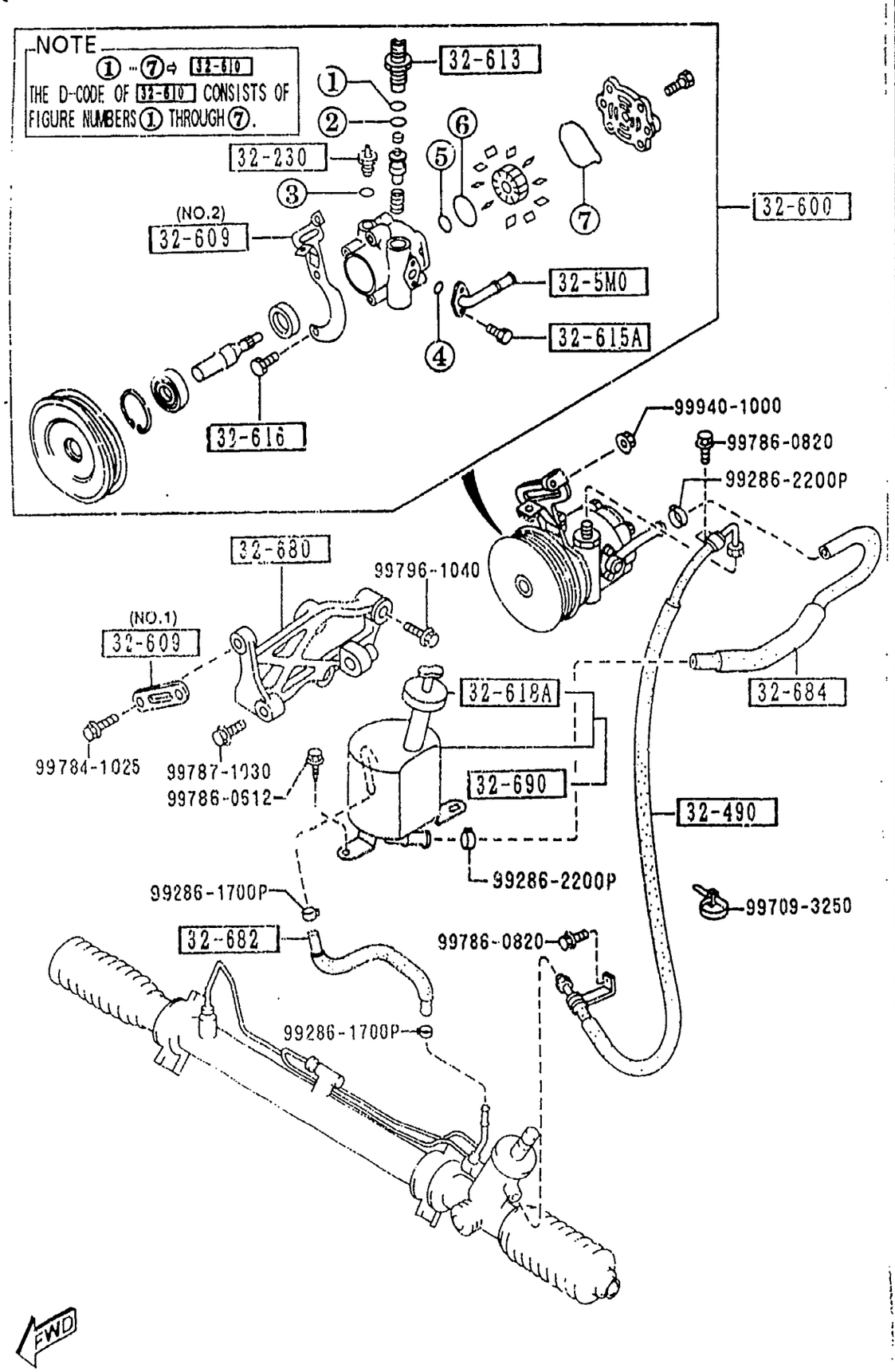


3240 -2 * POWER STEERING SYSTEM

| PART NO. | QTY | MODEL/RESTRICTION | MODEL/RESTRICTION | MODEL/RESTRICTION | FROM-TO |
|---|---|---|---|---|---|
| 32-680 | | BRACKET,VANE PUMP | | | |
| NA02-32-680 | 1 | | | | |
| 32-682 | | HOSE,RETURN | | | |
| NA02-32-682 | 2 | ('95 MODEL) | | | |
| NB11-32-682 | 1 | ('96 MODEL) | | | |
| 32-684 | | HOSE,RETURN | | | |
| NA02-32-684B | 1 | | | | |
| 32-690 | | TANK,VANE PUMP | | | |
| NA02-32-690A | 1 | ('95 MODEL) | | | |
| NB11-32-690 | 1 | ('96 MODEL) | | | |

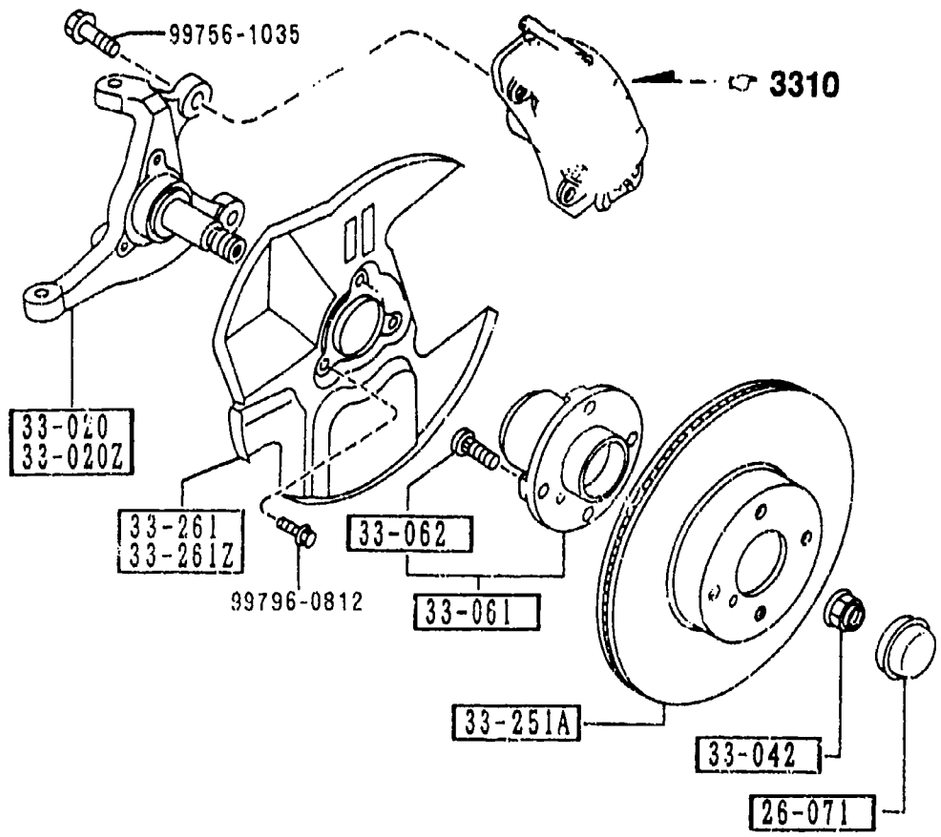

## 3300 -1 * FRONT AXLE (W/O ANTILOCK BRAKE)

| PART NO. | QTY | MODEL/RESTRICTION | MODEL/RESTRICTION | MODEL/RESTRICTION | FROM-TO |
|---|---|---|---|---|---|
| 26-071 | | CAP,HUB | | | |
| B455-26-071 | 2 | | | | |
| 33-020 | | KNUCKLE(R),STEERING | | | |
| NA01-33-021B | 1 | | | | |
| 33-020Z | | KNUCKLE(L),STEERING | | | |
| NA01-33-031B | 1 | | | | |
| 33-042 | | NUT | | | |
| D06Y-33-042 | 2 | W/WASHER | | | |
| 33-061 | | HUB,WHEEL | | | |
| NA01-33-04X | 2 | | | | |
| 33-062 | | BOLT,HUB | | | |
| B455-33-062 | 8 | | | | |
| 33-251A | | PLATE,DISC | | | |
| NA75-33-25X | 2 | | | | |
| 33-261 | | COVER(R),DUST | | | |
| NA75-33-261 | 1 | | | | |
| 33-261Z | | COVER(L),DUST | | | |
| NA75-33-271 | 1 | | | | |

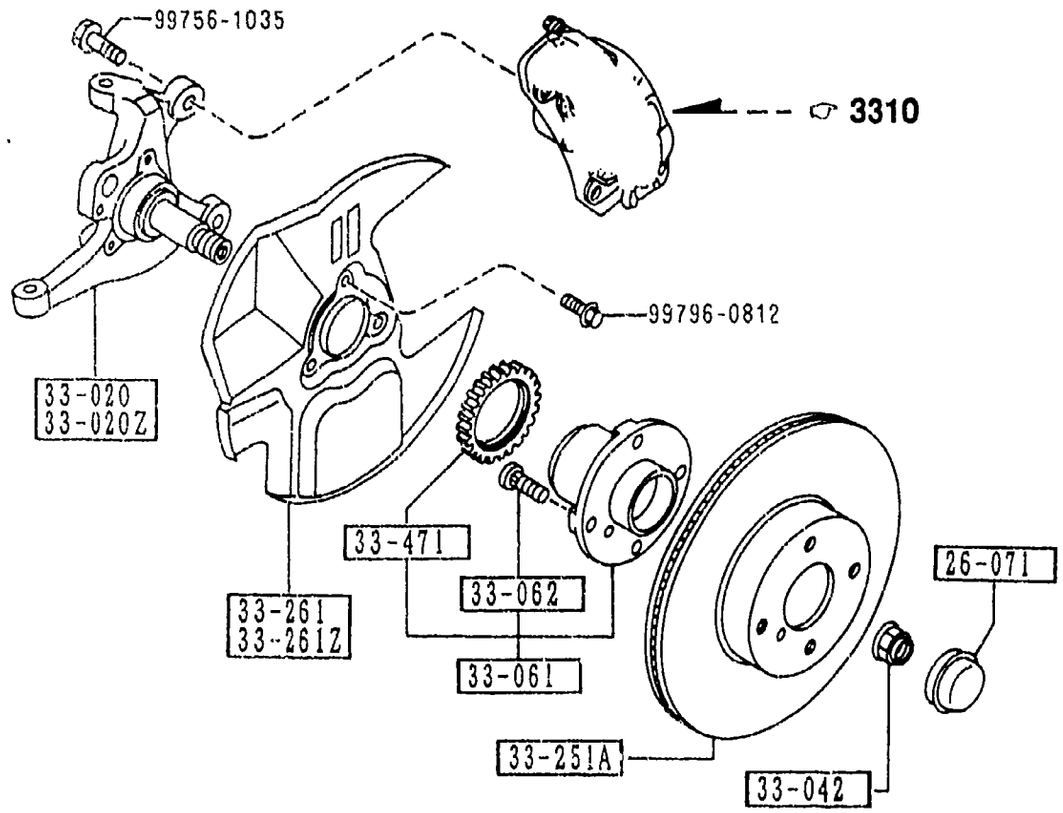


## 3300 A-1 * FRONT AXLE (W/ANTILOCK BRAKE)

| PART NO. | QTY | MODEL/RESTRICTION | MODEL/RESTRICTION | MODEL/RESTRICTION | FROM-TO |
|---|---|---|---|---|---|
| 26-071<br>B455-26-071 | 2 | CAP,HUB | | | |
| 33-020<br>NA23-33-021B | 1 | KNUCKLE(R),STEERING | | | |
| 33-020Z<br>NA23-33-031B | 1 | KNUCKLE(L),STEERING | | | |
| 33-042<br>D06Y-33-042 | 2 | NUT<br>W/WASHER | | | |
| 33-061<br>NA23-33-04XA | 2 | HUB,WHEEL | | | |
| 33-062<br>B455-33-062 | 6 | BOLT,HUB | | | |
| 33-251A<br>NA75-33-25X | 2 | PLATE,DISC | | | |
| 33-261<br>NA75-33-261 | 1 | COVER(R),DUST | | | |
| 33-261Z<br>NA75-33-271 | 1 | COVER(L),DUST | | | |
| 33-471<br>NA23-33-471B | 2 | ROTOR,SENSOR-FRT A.B.S. | | | |

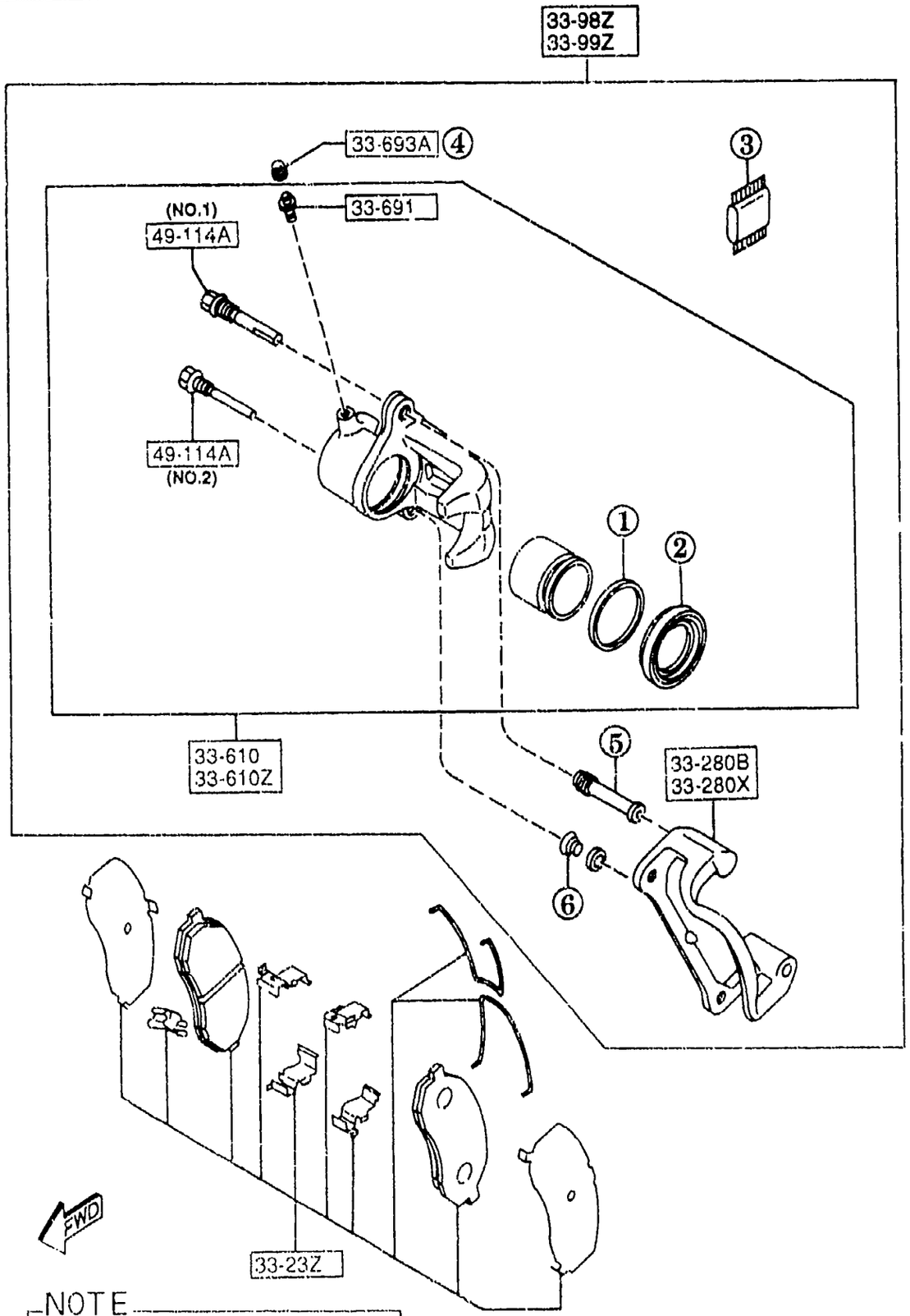


NOTE

①…⑥ ⇨ 33-26Z

THE D-CODE OF 33-26Z CONSISTS OF FIGURE NUMBERS ① THROUGH ⑥.

THOUGH ILLUSTRATIONS OF D-CODE 33-23Z AND 33-26Z ARE FOR LEFT SIDE ONLY, QUANTITIES OF THESE D-CODES IN THE TEXT ARE FOR ONE VEHICLE.



| PART NO. | QTY | MODEL/RESTRICTION | MODEL/RESTRICTION | MODEL/RESTRICTION | FROM-TO |
|---|---|---|---|---|---|
| 33-23Z | | PAD SET,FRT CALIPER | | | |
| NAY5-33-23Z | 1 | | | | -5C01 |
| AN(NAY5-33-23ZA) | | | | | |
| *NAY5-33-23ZA | 1 | | | | 5C01- |
| 33-26Z | | SEAL & BOOT SET,CAL. -FRT | | | |
| NAY5-33-26Z | 1 | | | | |
| 33-280B | | SUPPORT(R),MOUNTING | | | |
| NA75-33-281 | 1 | | | | |
| 33-280X | | SUPPORT(L),MOUNTING | | | |
| NA75-33-291 | 1 | | | | |
| 33-610 | | BODY & PISTON(R),CAL IPER | | | |
| NA75-33-61X | 1 | | | | |
| 33-610Z | | BODY & PISTON(L),CAL IPER | | | |
| NA75-33-71X | 1 | | | | |
| 33-691 | | SCREW,BLEEDER | | | |
| B001-33-691 | 2 | | | | |
| 33-693A | | CAP,BLEEDER SCREW | | | |
| 0259-33-693 | 2 | | | | |
| 33-98Z | | CALIPER(R),PADLESS-F R | | | |
| *NAZ5-33-98Z | 1 | | | | |
| 33-99Z | | CALIPER(L),PADLESS-F R | | | |
| *NAZ5-33-99Z | 1 | | | | |
| 49-114A | | PIN,SLIDER | | | |
| 8173-49-114 | 2 | (ILLUST. NO.1) | | | |
| 8239-49-114 | 2 | (ILLUST. NO.2) | | | |

5C01 NA3** -706448

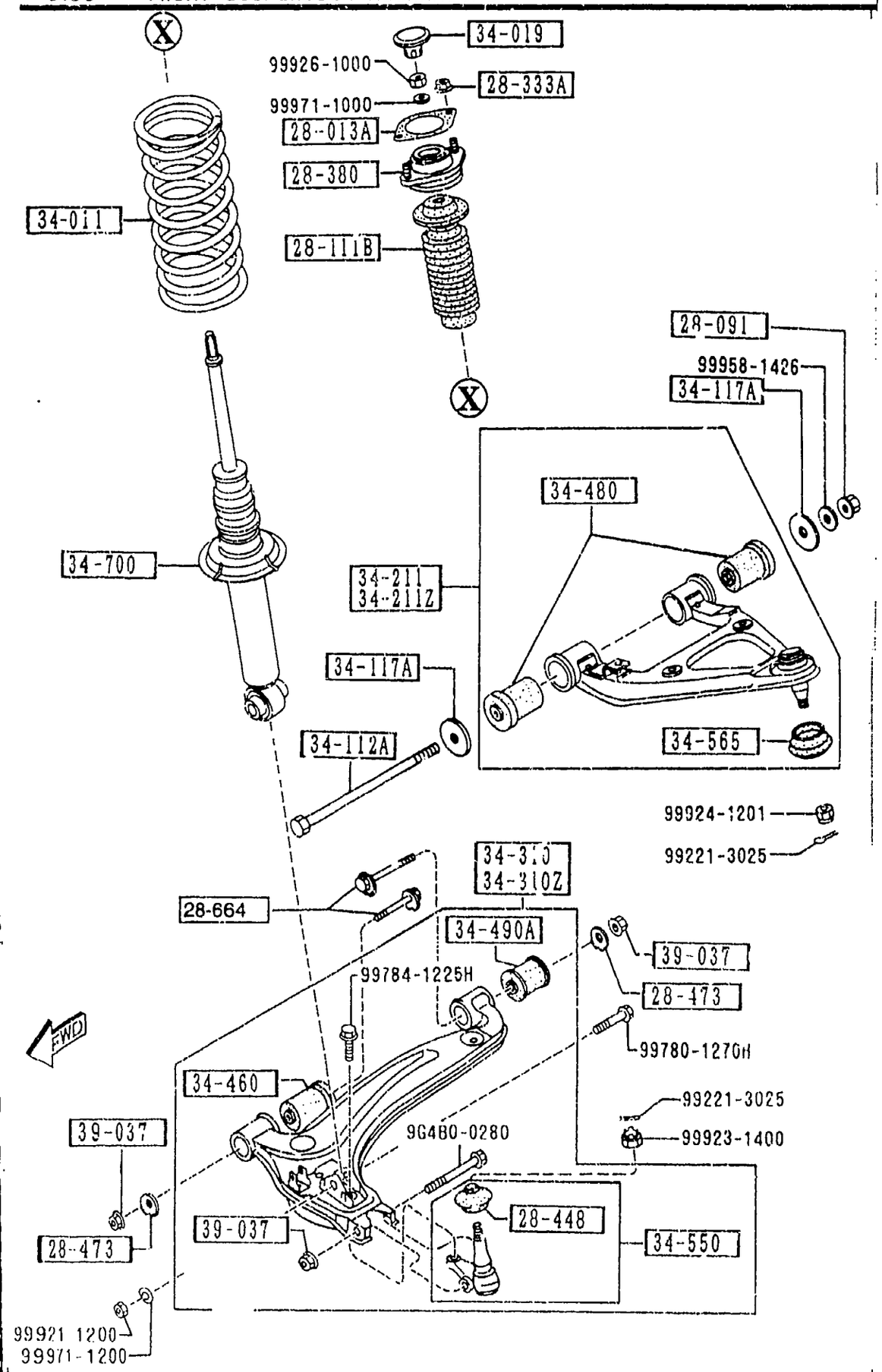






| PART NO. | QTY | MODEL/RESTRICTION | MODEL/RESTRICTION | MODEL/RESTRICTION | FROM-TO |
|---|---|---|---|---|---|
| 28-013A | | SHEET,RUBBER | | | |
| G030-28-013A | 2 | | | | |
| 28-091 | | NUT | | | |
| FB01-28-091A | 2 | | | | |
| 28-111B | | STOPPER,BUMP | | | |
| N021-34-111 | 2 | | | | |
| 28-333A | | NUT,FLANGE | | | |
| H001-28-333 | 4 | | | | |
| 28-380 | | RUBBER,MOUNTING | | | |
| NA01-28-380B | 2 | | | | |
| 28-448 | | SEAL,DUST-BALL JOINT | | | |
| H266-28-448 | 2 | | | | |
| 28-473 | | PLATE,CAM-SUB FRAME | | | |
| NA75-34-473 | 4 | | | | -5815 |
| NA80-28-473 | 4 | | | | 5815- |
| 28-664 | | BOLT,ADJUST | | | |
| NA75-34-4A0 | 4 | | | | -4B01 |
| NA75-34-4A0A | 4 | | | | 4B01-5B15 |
| *NA80-28-66Z A (NA80-28-66ZB) | 4 | | | | 5B15-6401 |
| *NA80-28-66ZB | 1 | | | | 6401- |
| 34-011 | | SPRING,COIL-FRONT | | | |
| NA03-34-011 | 2 | (MT) | | | |
| NA01-34-011 | 2 | (AT) | | | |
| 34-019 | | CAP,DAMPER | | | |
| NA01-34-019 | 2 | | | | -4B01 |
| 34-112A | | BOLT | | | |
| NA01-34-112 | 2 | | | | |
| 34-117A | | WASHER | | | |

4B01 NA35* -606043
5B15 NA3** -705265
6401 NA3** -717767

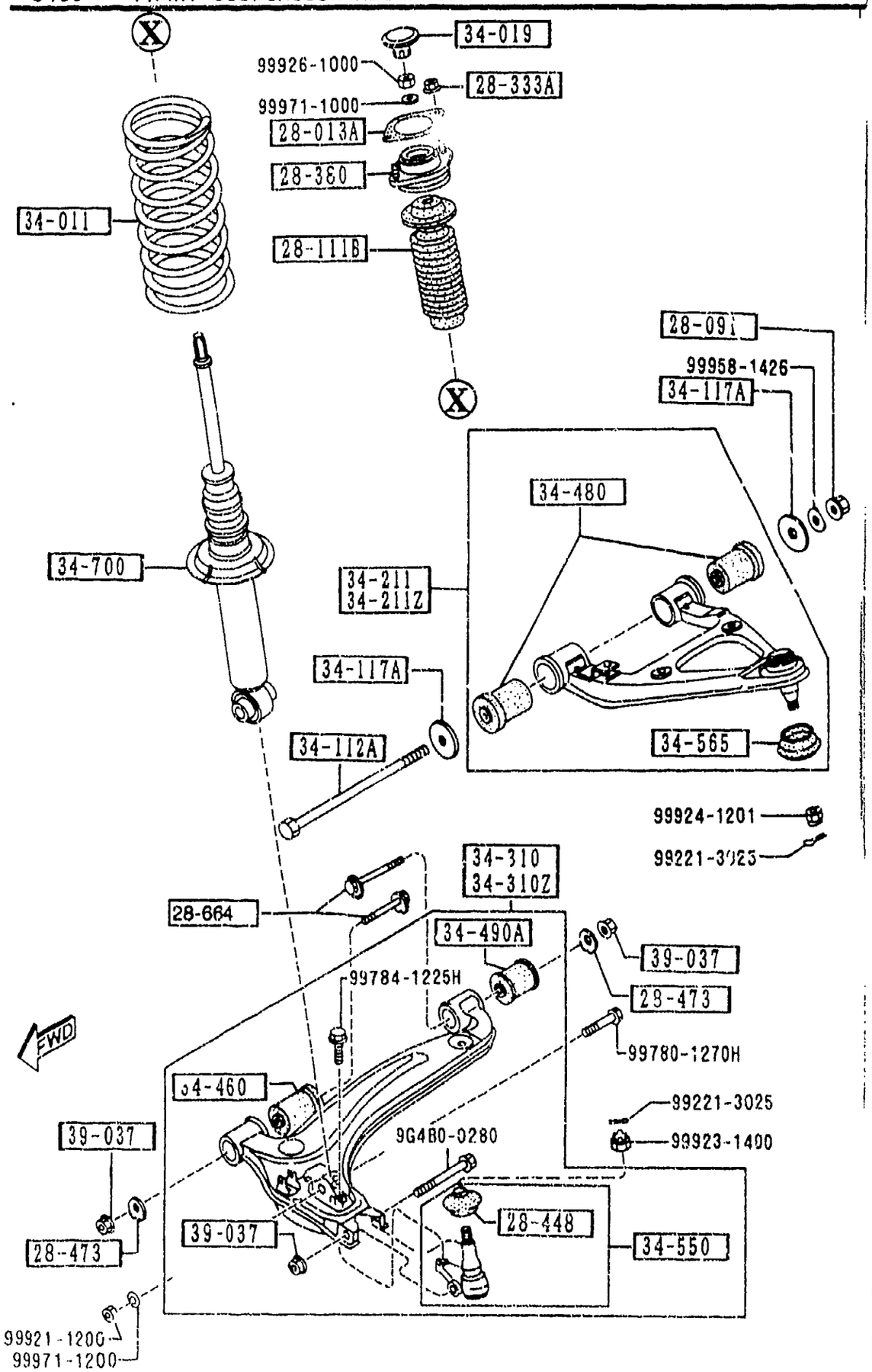






| PART NO. | QTY | MODEL/RESTRICTION | MODEL/RESTRICTION | MODEL/RESTRICTION | FROM-TO |
|---|---|---|---|---|---|
| CONT'D | | | | | |
| NA01-34-117A | 4 | | | | |
| 34-211 | | ARM(R),UPPER | | | |
| NA01-34-200A | 1 | (W/O A. LOCK BRAKE) | | | |
| NA23-34-200 | 1 | (W/A. LOCK BRAKE) | | | |
| 34-211Z | | ARM(L),UPPER | | | |
| NA01-34-200A | 1 | (W/O A. LOCK BRAKE) | | | |
| NA23-34-250 | 1 | (W/A. LOCK BRAKE) | | | |
| 34-310 | | ARM(R),LOWER | | | |
| NA75-34-300A | 1 | (W/O A. LOCK BRAKE) | | | |
| NA75-34-300A | 1 | (W/A. LOCK BRAKE) | | | -4A01 |
| N040-34-300 | 1 | (W/A. LOCK BRAKE) | | | 4A01- |
| 34-310Z | | ARM(L),LOWER | | | |
| NA75-34-350A | 1 | (W/O A. LOCK BRAKE) | | | |
| NA75-34-350A | 1 | (W/A. LOCK BRAKE) | | | -4A01 |
| N040-34-350 | 1 | (W/A. LOCK BRAKE) | | | 4A01- |
| 34-460 | | BUSH,RUBBER-LWR ARM | | | |
| NA01-34-460A | 2 | | | | |
| 34-480 | | BUSHING,RUBBER-LOWER ARM | | | |
| NA01-34-480A | 4 | | | | |
| 34-490A | | BUSHING,RUBBER | | | |
| NAC1-34-490 | 2 | | | | |
| 34-550 | | BALL JOINT,LOWER | | | |
| NA01-34-550 | 2 | | | | |
| 34-565 | | SEAL,DUST | | | |
| NA01-34-548 | 2 | | | | |
| 34-700 | | DAMPER,FRONT | | | |
| NA53-34-700B | 2 | ((EXC.BILSTEIN DAMP.)>(W/A. LOCK BRAKE)) | | | |
| N018-34-700B | 2 | ((EXC.BILSTEIN DAMP.)>(W/O A. LOCK BRAKE | | | |

4A01 NA35* -603621

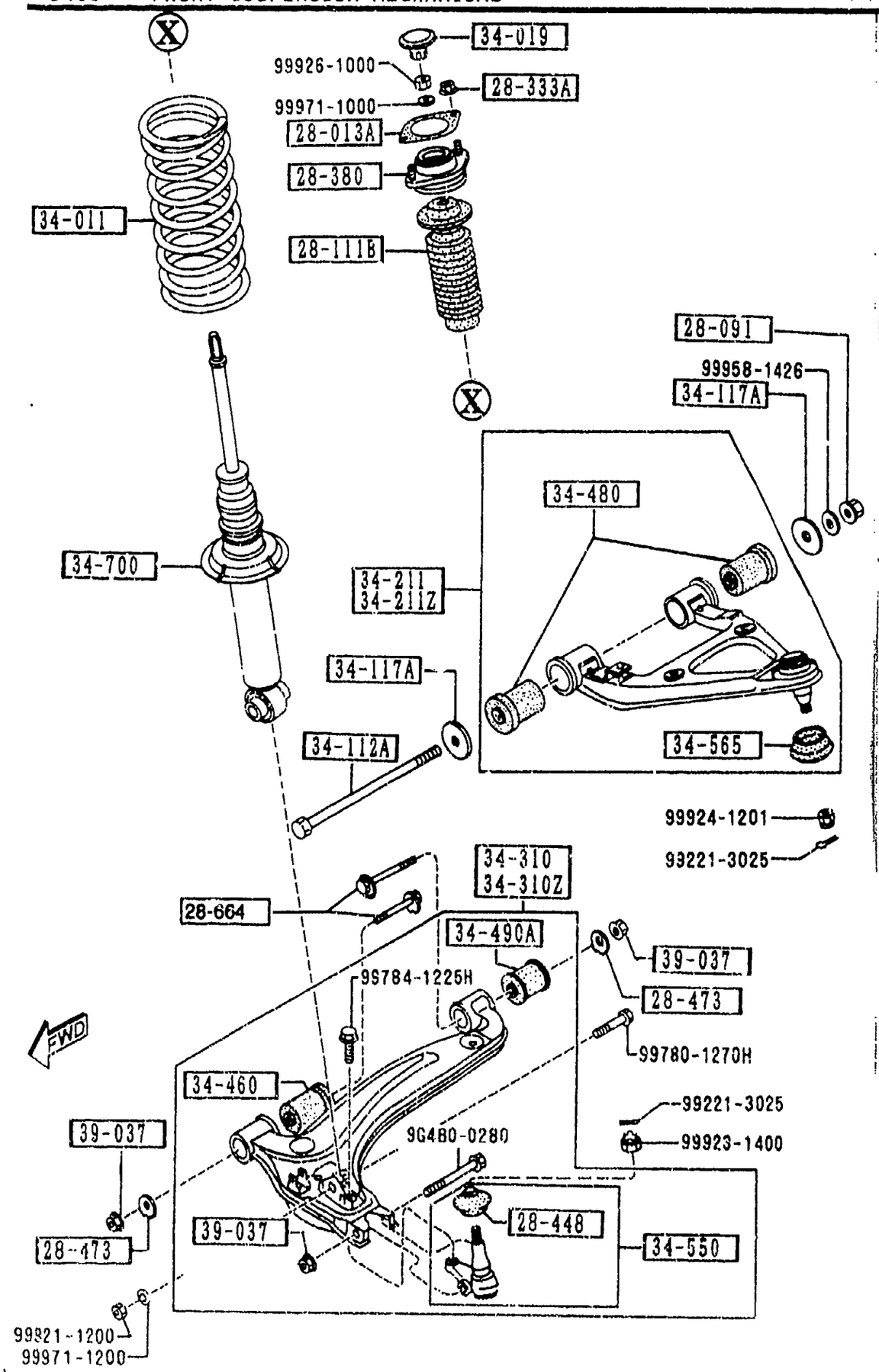






| PART NO. | QTY | MODEL/RESTRICTION | MODEL/RESTRICTION | MODEL/RESTRICTION | FROM-TO |
|---|---|---|---|---|---|
| CONT'D | | ) ) | | | |
| N023-34-700C | 2 | ((BILSTEIN DAMP.)>(' 95 MODEL) ) | | | |
| N023-34-700D | 2 | ((BILSTEIN DAMP.)>(' 96 MODEL) ) | | | |
| +---------+ \| 39-037 \| +---------+ | | NUT | | | |
| B037-28-091 | 6 | | | | -4B01 |
| B001-39-037B | 6 | | | | 4B01- |

4B01 NA35* -606043

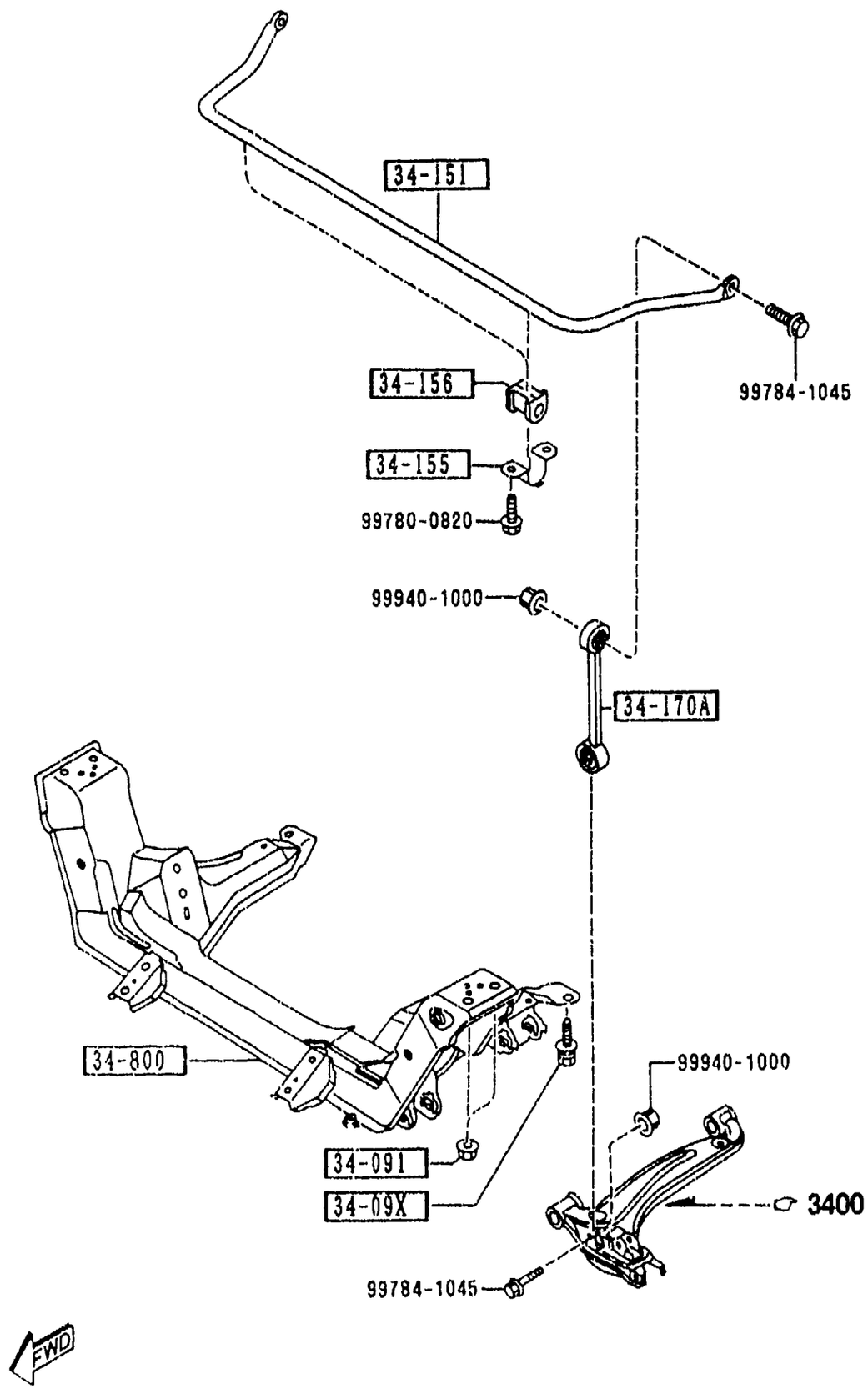


## 3410 -1 * CROSSMEMBER & STABILIZER

| PART NO. | QTY | MODEL/RESTRICTION | MODEL/RESTRICTION | MODEL/RESTRICTION | FROM-TO |
|---|---|---|---|---|---|
| 34-09X | | BOLT | | | |
| NA01-34-09XA | 4 | | | | |
| 34-091 | | NUT | | | |
| FB01-34-091 | 4 | | | | |
| 34-151 | | STABILIZER,FRONT | | | |
| NA75-34-151 | 1 | (BILSTEIN DAMP.) | | | |
| NA80-34-151 | 1 | (EXC.BILSTEIN DAMP.) | | | |
| 34-155 | | PLATE,STABILIZER | | | |
| FB01-34-155 | 2 | | | | |
| 34-156 | | BUSH,STABILIZER-FRT | | | |
| NA01-34-156A | 2 | (EXC.BILSTEIN DAMP.) | | | |
| NA75-34-156 | 2 | (BILSTEIN DAMP.) | | | |
| 34-170A | | LINK,CONTROL-STAB | | | |
| NA01-34-170 | 2 | | | | |
| 34-800 | | MEMBER,CROSS | | | |
| NA01-34-800C | 1 | | | | -5B15 |
| A (NA01-34-800D) | | | | | |
| NA01-34-800D | 1 | | | | 5B15- |

5B15 NA3** -705265

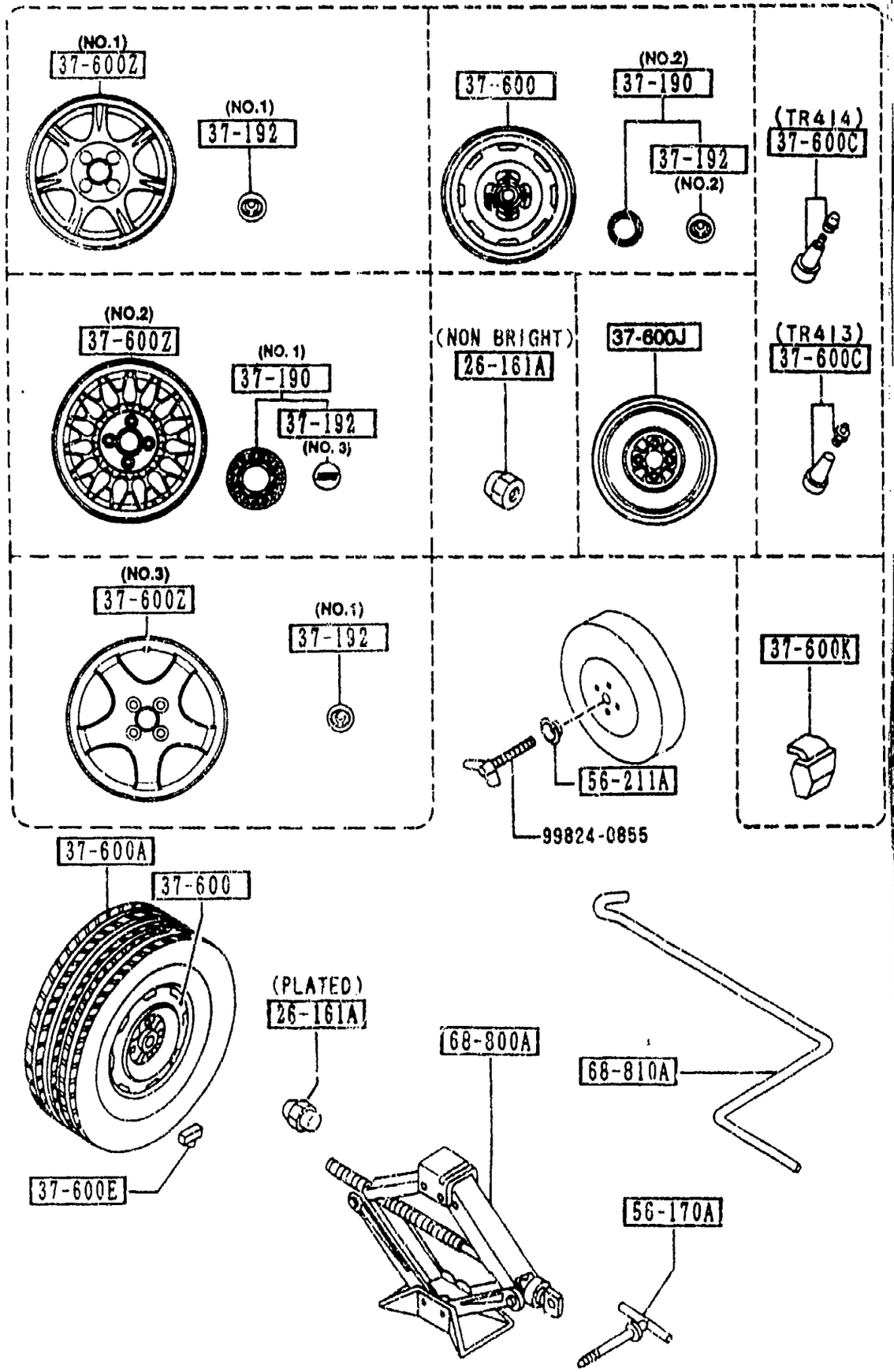






| PART NO. | QTY | MODEL/RESTRICTION | MODEL/RESTRICTION | MODEL/RESTRICTION | FROM-TO |
|---|---|---|---|---|---|
| 26-161A | | NUT,HUB | | | |
| 0603-26-161 | 16 | NON BRIGHT | | | |
| B002-37-160 | 16 | PLATED | | | |
| 37-190 | | CAP,CENTER | | | |
| M011-37-190 | 4 | (ILLUST. NO.1) | | | |
| NA53-37-190 | 4 | (ILLUST. NO.2) | | | |
| 37-192 | | EMBLEM,CAP-WHEEL | | | |
| EA02-37-192 | 4 | (ILLUST. NO.1) | | | |
| GA7C-37-192 | 4 | (ILLUST. NO.2) | | | |
| M011-37-192 | 4 | (ILLUST. NO.3) | | | |
| 37-600 | | WHEEL,DISC-STEEL | | | |
| 9965B-95540 | 4 | 5.5JJX14 P=100/0=45 | | | |
| 37-600A | | TIRE | | | |
| 90620-47614 | 1 | T115/70D14 | | | |
| 90623-06684 | 4 | P185/60R14 DUNLOP | | | |
| 90624-26684 | 4 | P185/60R14 BS | | | |
| 90625-56684 | 4 | P185/60R14 YOKOHAMA | | | |
| 37-600C | | VALVE,AIR | | | |
| 99636-04130 | 1 | TR413 | | | |
| 99636-04140 | 4 | TR414 | | | |
| 37-600E | | WEIGHT,DISC WHEEL-STEEL | | | |
| 99655-30005 | 4 | 5G | | | |
| 99655-30010 | 4 | 10G | | | |
| 99655-30015 | 4 | 15G | | | |
| 99655-30020 | 4 | 20G | | | |

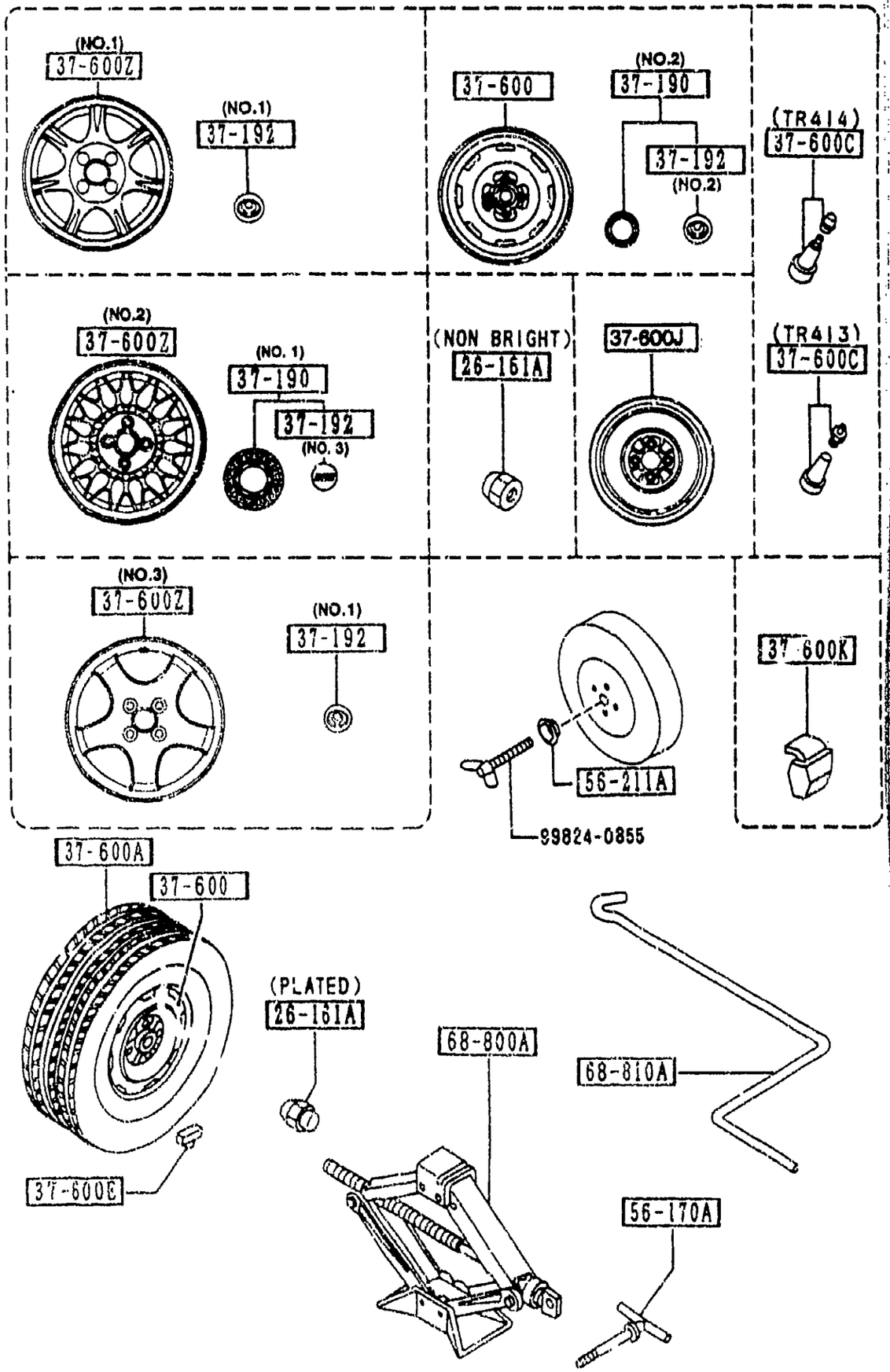






| PART NO. | QTY | MODEL/RESTRICTION | MODEL/RESTRICTION | MODEL/RESTRICTION | FROM-TO |
|---|---|---|---|---|---|
| CONT'D | | | | | |
| 99655-30025 | 4 | 25G | | | |
| 99655-30030 | 4 | 30G | | | |
| 99655-30035 | 4 | 35G | | | |
| 99655-30040 | 4 | 40G | | | |
| 99655-30045 | 4 | 45G | | | |
| 99655-30050 | 4 | 50G | | | |
| 99655-30055 | 4 | 55G | | | |
| 99655-30060 | 4 | 60G | | | |
| +---------+ | | | | | |
| \| 37-600J \| | | WHEEL DISK-TEMPORARY | | | |
| +---------+ | | | | | |
| 99651-84040 | 1 | 4TX14 P=100/O=45 | | | -5101 |
| *99652-14040 | 1 | 4TX14 P=100/O=45 | | | 5101- |
| +---------+ | | | | | |
| \| 37-600K \| | | WEIGHT,DISC WHEEL-AL UMI | | | |
| +---------+ | | | | | |
| 99655-90005 | 4 | 5G FOR 1-PIECE WHL | | | |
| 99655-90010 | 4 | 10G FOR 1-PIECE WHL | | | |
| 99655-90015 | 4 | 15G FOR 1-PIECE WHL | | | |
| 99655-90020 | 4 | 20G FOR 1-PIECE WHL | | | |
| 99655-90025 | 4 | 25G FOR 1-PIECE WHL | | | |
| 99655-90030 | 4 | 30G FOR 1-PIECE WHL | | | |
| 99655-90035 | 4 | 35G FOR 1-PIECE WHL | | | |
| 99655-90040 | 4 | 40G FOR 1-PIECE WHL | | | |
| 99655-90045 | 4 | 45G FOR 1-PIECE WHL | | | |
| 99655-90050 | 4 | 50G FOR 1-PIECE WHL | | | |
| 99655-90055 | 4 | 55G FOR 1-PIECE WHL | | | |

5101 NA35* -612163

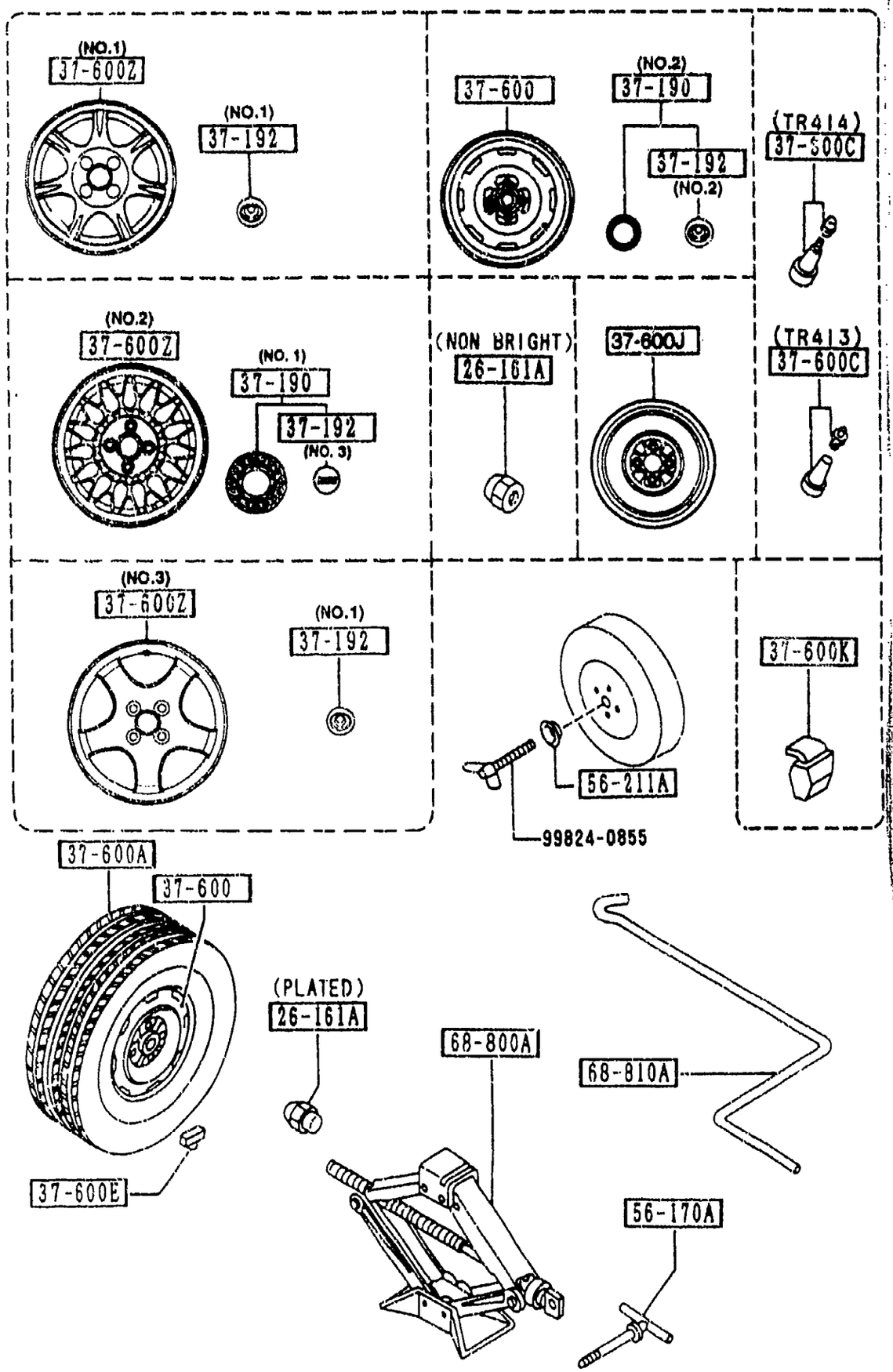




| PART NO. | QTY | MODEL/RESTRICTION | MODEL/RESTRICTION | MODEL/RESTRICTION | FROM-TO |
|---|---|---|---|---|---|
| CONT'D | | | | | |
| 99655-90060 | 4 | 60G FOR 1-PIECE WHL | | | |
| 37-600Z | | WHEEL,DISC-ALUMI. | | | |
| 99651-36040 | 4 | 6JJX14 SILVER (ILLUST. NO.1) | | | |
| 99651-96040 | 4 | 6JJX14 BRIGHT (ILLUST. NO.1) | | | |
| 9965C-36050 | 4 | 6JJX15 BBS (ILLUST. NO.2) | | | 4A01- |
| 9965E-86050 | 4 | 6JJX15 (ILLUST. NO.3) | | | 5B15- |
| 56-170A | | BOLT,JACK SET | | | |
| B001-56-170C | 1 | | | | |
| 56-211A | | PLATE,CLAMP-JACK | | | |
| 1219-56-211 | 1 | | | | |
| 68-800A | | JACK | | | |
| B455-37-790A | 1 | | | | |
| 68-810A | | HANDLE,JACK | | | |
| GJ21-37-810 | 1 | | | | |

4A01 NA35* -603621
5B15 NA3** -705265

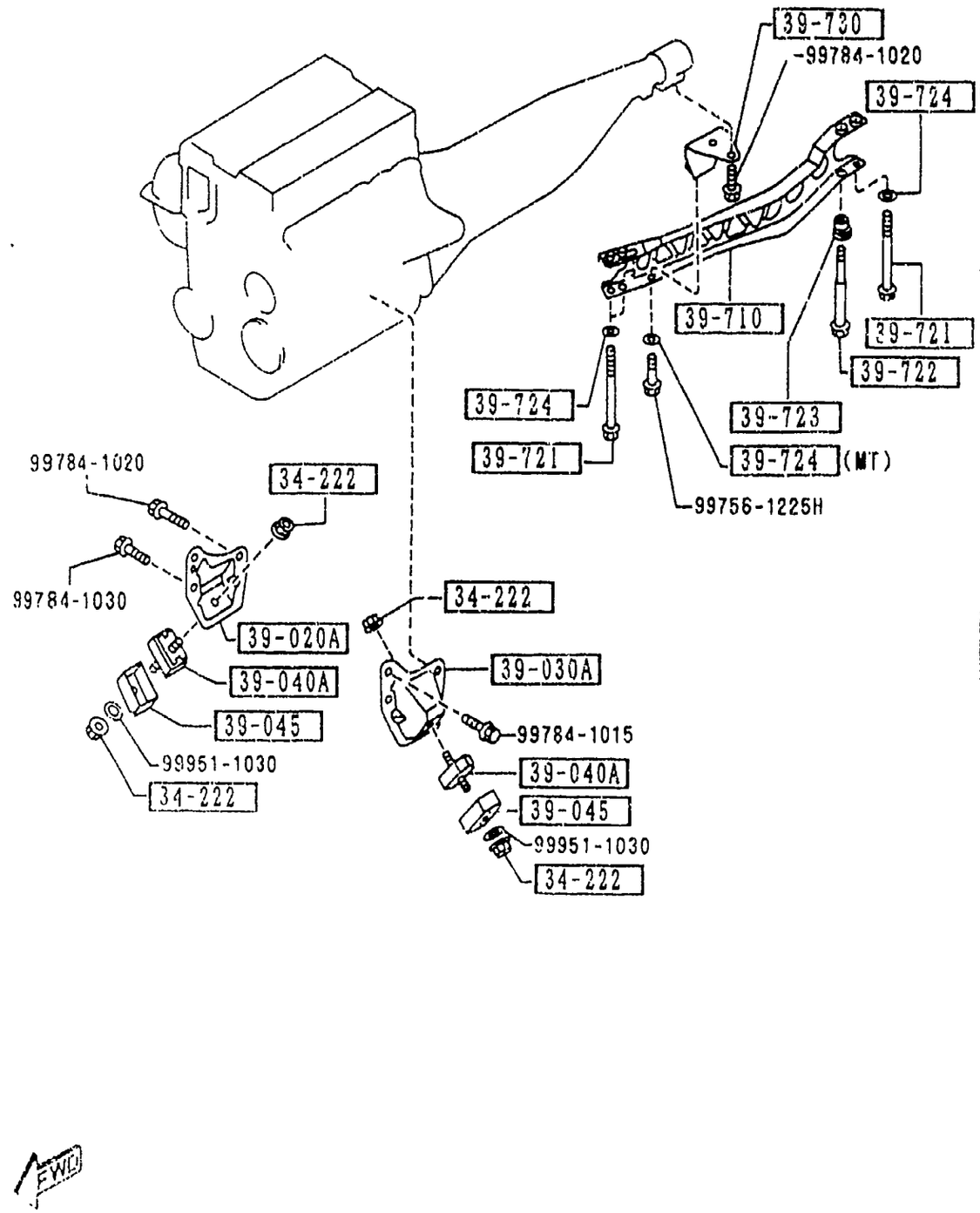


## 3900 -1 * ENGINE & T/MISSION MOUNTINGS

| PART NO. | QTY | MODEL/RESTRICTION | MODEL/RESTRICTION | MODEL/RESTRICTION | FROM-TO |
|---|---|---|---|---|---|
| 34-222 | | NUT | | | |
| 8871-34-222 | 4 | | | | |
| 39-020A | | BRACKET(R),ENGINE | | | |
| NA75-39-021 | 1 | | | | |
| 39-030A | | BRACKET(L),ENGINE | | | |
| NA75-39-030 | 1 | | | | |
| 39-040A | | RUBBER,ENGINE MT. | | | |
| NA01-39-040A | 2 | | | | |
| 39-045 | | CASING,STOPPER | | | |
| NA01-39-041A | 2 | (MT) | | | |
| S231-39-041A | 2 | (AT) | | | -5703 |
| NA01-39-041A | 2 | (AT) | | | 5703- |
| 39-710 | | FRAME,POWER PLANT | | | |
| NA75-39-710A A (NA01-39-710A) | 1 | (MT) | | | -4A17 |
| NAB1-39-710A | 1 | (AT) | | | -4A21 |
| NA01-39-710A | 1 | (MT) | | | 4A17- |
| NA03-39-710A | 1 | (AT) | | | 4A21- |
| 39-721 | | BOLT,PLANT FRAME | | | |
| NA01-39-721 | 3 | | | | |
| 39-722 | | BOLT,PLANT FRAME | | | |
| NA01-39-722 | 1 | | | | |
| 39-723 | | SPACER,PLANT FRAME | | | |
| NA01-39-723 | 1 | | | | |
| 39-724 | | WASHER,PLAIN-FRAME | | | |
| NA01-39-724 | 3 | (AT) | | | |
| NA01-39-724 | 4 | (MT) | | | |
| 39-730 | | BRACKET,PLANT FRAME | | | |
| NA01-39-730A | 1 | (MT) | | | |

4A17 NA35* -604764
4A21 NA35* -605228
5703 NA3** -700001

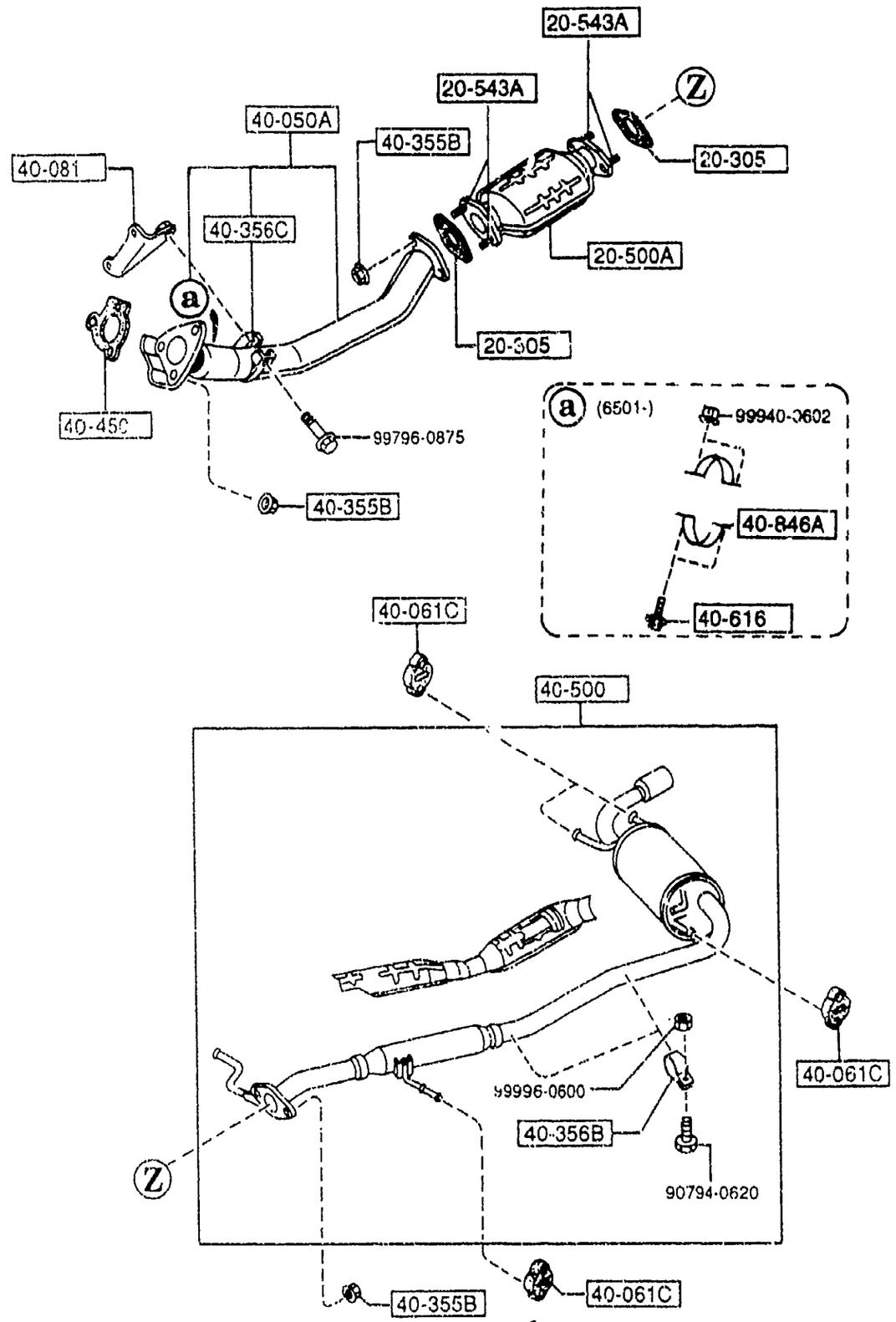




| PART NO. | QTY | MODEL/RESTRICTION | MODEL/RESTRICTION | MODEL/RESTRICTION | FROM-TO |
|---|---|---|---|---|---|
| 20-305 | | GASKET,EXH.PIPE-CONVERTER | | | |
| B690-40-305 | 2 | NON ASBESTOS | | | |
| 20-500A | | CATALYST,THREE WAY | | | |
| BPE8-20-600 | 1 | ('95 MODEL) | | | |
| BPS1-20-600 | 1 | ('96 MODEL) | | | |
| 20-543A | | STUD | | | |
| *Z502-20-WA4 | 4 | | | | |
| 40-050A | | PIPE,EXHAUST-FRONT | | | |
| BP56-40-500 A (BP56-40-500A) | 1 | | | | -6501 |
| *BP56-40-500A AN(BP56-40-500B) | 1 | | | | 6501-6601 |
| *BP56-40-500B | 1 | | | | 6601- |
| 40-061C | | HANGER,SILENCER | | | |
| RF03-40-061 | 4 | | | | |
| 40-081 | | BRACKET,HANGER | | | |
| B690-40-080A | 1 | | | | |
| 40-355B | | NUT | | | |
| JE10-40-355 | 7 | | | | |
| 40-356B | | BAND | | | |
| B6A5-40-356 | 2 | | | | |
| 40-356C | | BAND | | | |
| B690-40-356 | 1 | | | | |
| 40-450 | | GASKET,CONVERTER | | | |
| B690-40-450 | 1 | NON ASBESTOS | | | |
| 40-500 | | SILENCER,MAIN | | | |
| BPA5-40-100 | 1 | (('96 MODEL)>(MT) ) | | | |
| BPA6-40-100 | 1 | (('96 MODEL)>(AT) ) | | | |
| BP55-40-100C AN(BP55-40-100D) | 1 | (('95 MODEL)>(MT) ) | | | -4901 |

4901 NA35* -602618
6501 NA3** -718684
6601 NA3** -719621

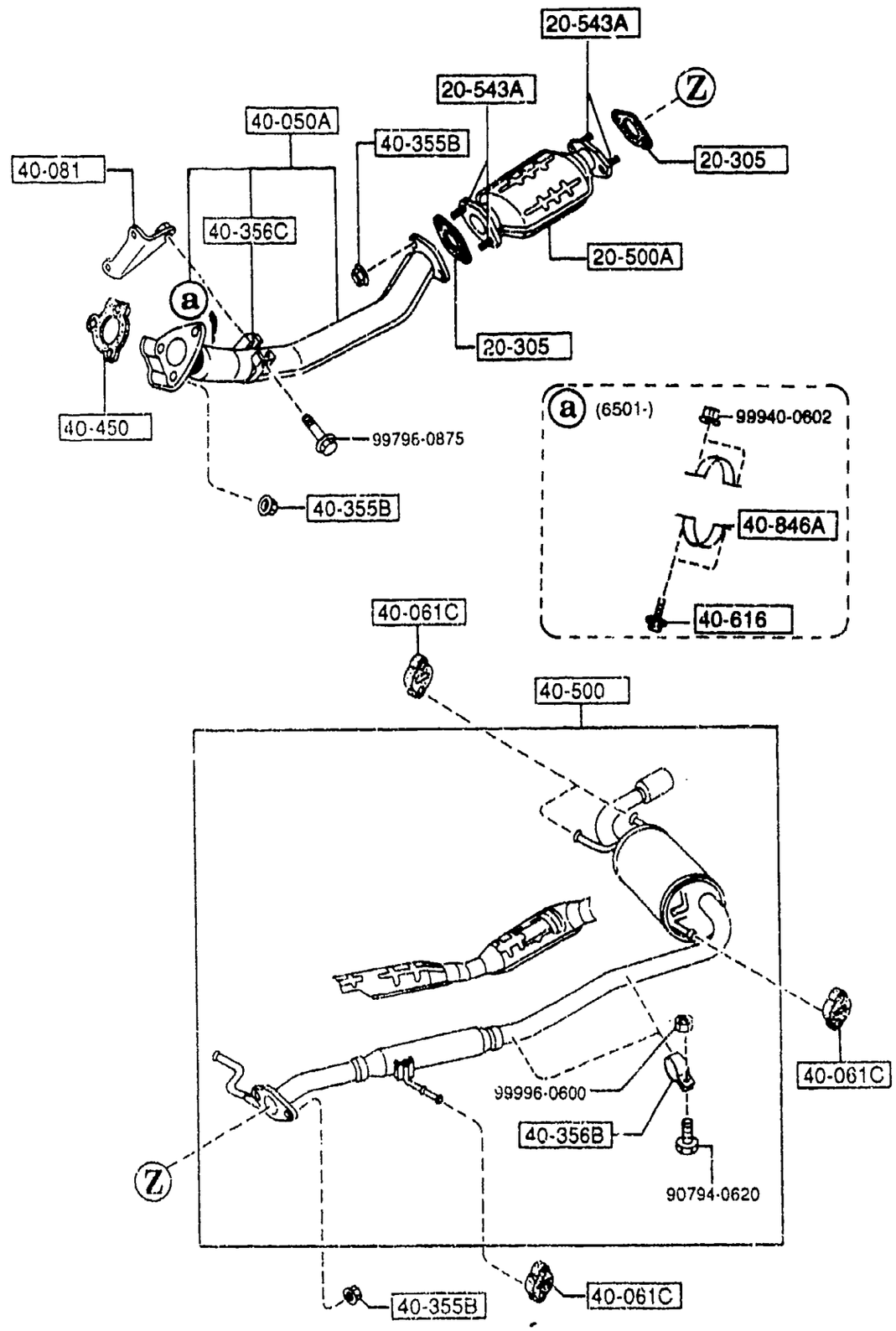




| PART NO. | QTY | MODEL/RESTRICTION | MODEL/RESTRICTION | MODEL/RESTRICTION | FROM-TO |
|---|---|---|---|---|---|
| CONT'D | | | | | |
| BP56-40-100C<br>AN(BP56-40-100D) | 1 | (('95 MODEL)>(AT) ) | | | -4901 |
| BP55-40-100D | 1 | (('95 MODEL)>(MT) ) | | | 4901- |
| BP56-40-100D | 1 | (('95 MODEL)>(AT) ) | | | 4901- |
| +----------+<br>\| 40-616 \|<br>+----------+ | | BOLT | | | |
| *E521-40-616 | 2 | | | | 6501- |
| +----------+<br>\| 40-846A \|<br>+----------+ | | BRACKET,PROTECTOR | | | |
| *F203-40-802 | 1 | | | | 6501- |

4901 NA35* -602618
6501 NA3** -718684

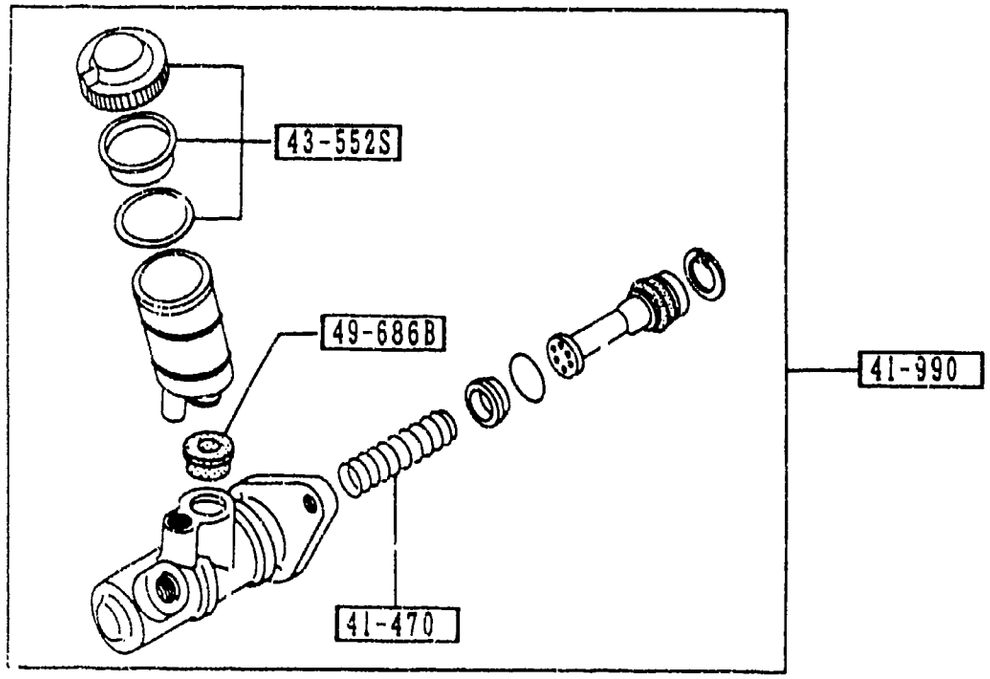


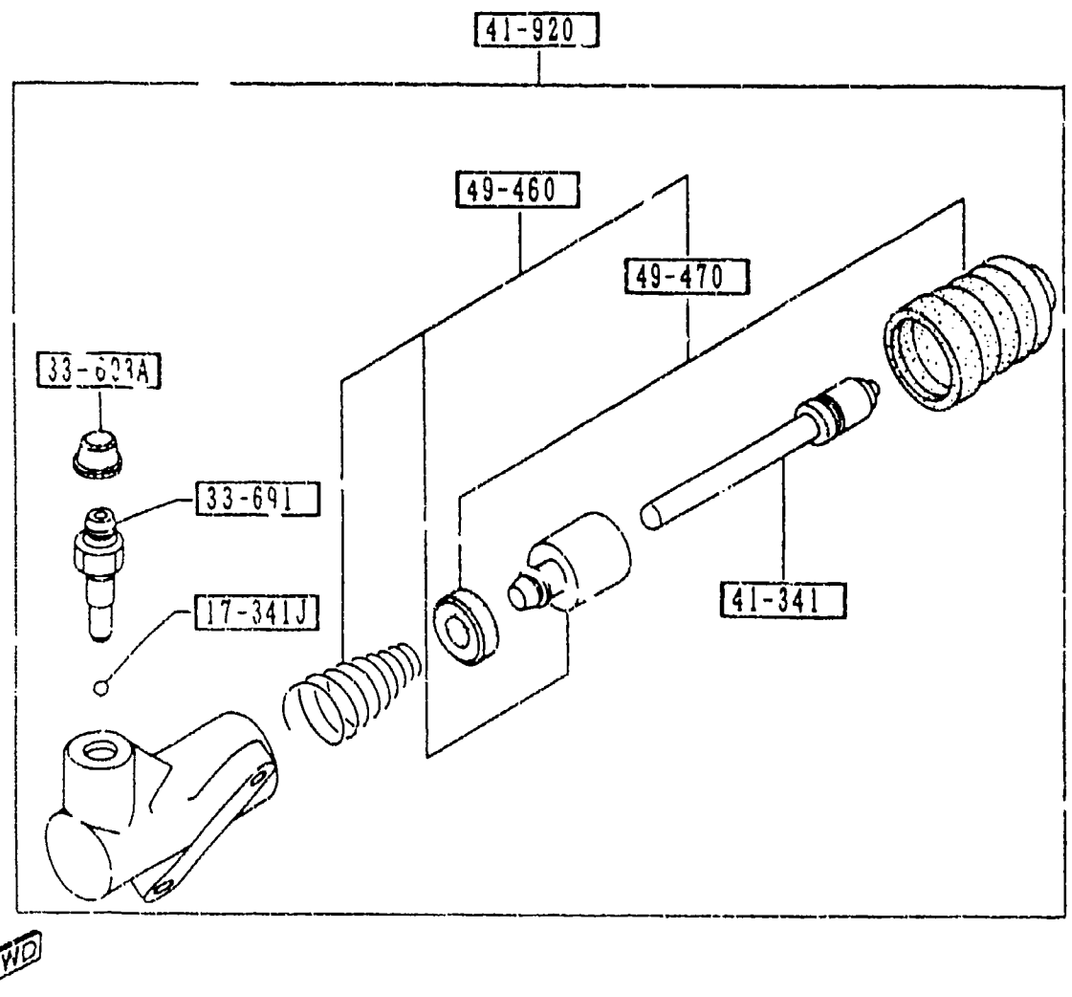




| PART NO. | QTY | MODEL/RESTRICTION | MODEL/RESTRICTION | MODEL/RESTRICTION | FROM-TO |
|---|---|---|---|---|---|
| 17-341J<br>99611-1500 | 1 | BALL,STEEL | | | |
| 33-691<br>0259-33-691 | 1 | SCREW,BLEEDER | | | |
| 33-693A<br>0259-33-693 | 1 | CAP,BLEEDER SCREW | | | |
| 41-341<br>H266-41-341 | 1 | ROD,PUSH | | | |
| 41-470<br>B312-41-470 | 1 | SPRING | | | |
| 41-920<br>NA01-41-920 | 1 | CYL.,CLUTCH RELEASE | | | |
| 41-990<br>NA01-41-400A | 1 | CYL.,CLUTCH MASTER | | | |
| 43-552S<br>B093-49-580 | 1 | CAP SET,RESERVE TANK | | | |
| 49-460<br>H005-49-460 | 1 | PARTS KIT,INNER | | | |
| 49-470<br>H005-49-470 | 1 | SEAL KIT | | | |
| 49-686B<br>0305-49-686B | 1 | BUSH,ELBOW JOINT | | | |

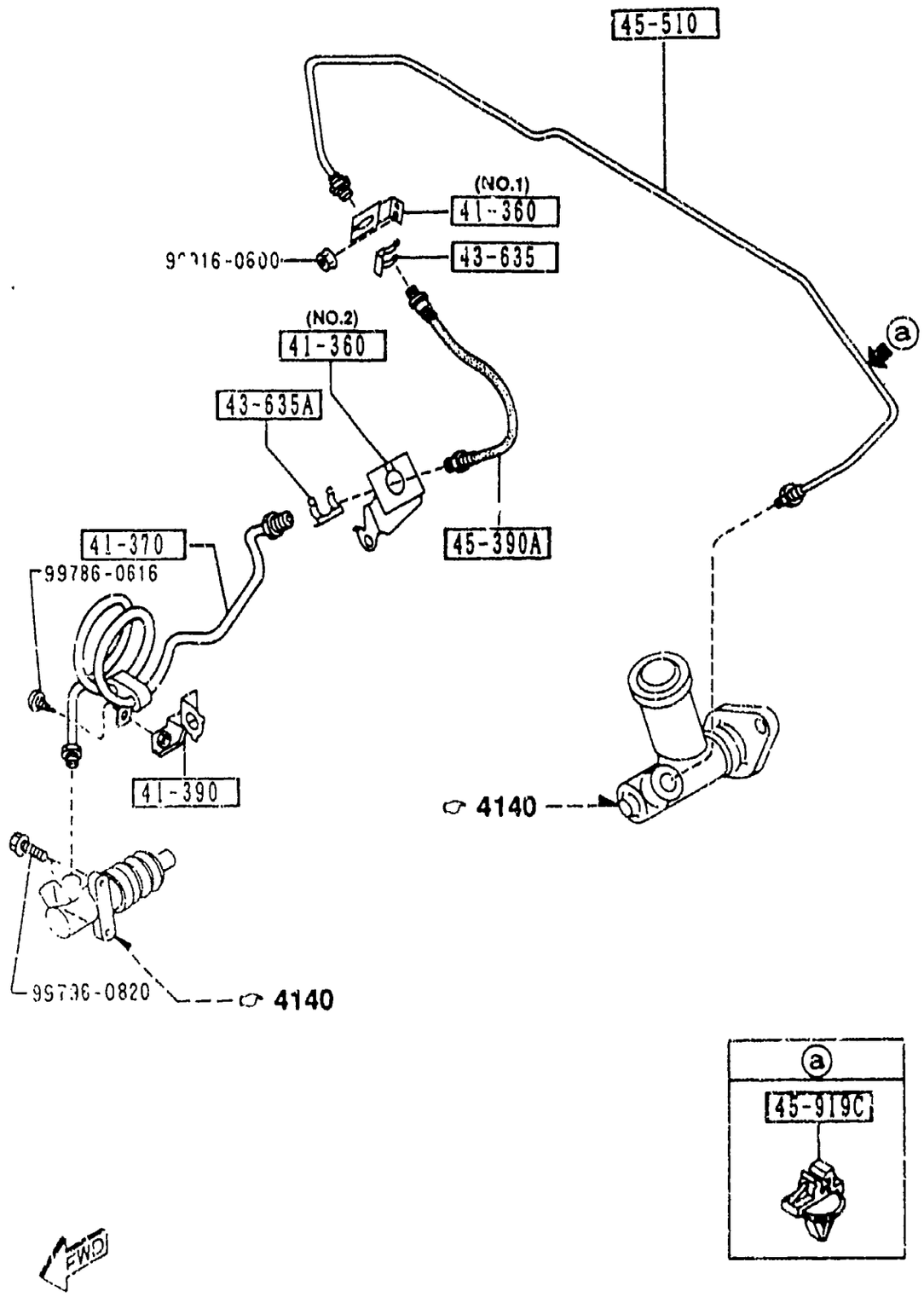


## 4145 -1 * MANUAL TRANSMISSION CLUTCH PIPINGS

| PART NO. | QTY | MODEL/RESTRICTION | MODEL/RESTRICTION | MODEL/RESTRICTION | FROM-TO |
|---|---|---|---|---|---|
| 41-360 | | HOLDER,CLUTCH | | | |
| NA02-41-370 | 1 | MIDORI (ILLUST. NO.1) | | | |
| NA75-41-370 | 1 | (ILLUST. NO.2) | | | |
| 41-370 | | PIPE,CLUTCH | | | |
| NA75-41-360 | 1 | | | | |
| 41-390 | | HOLDER,PIPE | | | |
| NA01-41-390 | 1 | | | | |
| 43-635 | | CLIP,FLEXIBLE HOSE | | | |
| W023-43-635 | 1 | | | | -4927 |
| A (W023-43-635A) | | | | | |
| W023-43-635A | 1 | | | | 4927- |
| 43-635A | | CLIP,FLEXIBLE HOSE | | | |
| 0136-43-635 | 1 | | | | |
| 45-390A | | HOSE,CLUTCH FLEXIBLE | | | |
| HE01-45-540 | 1 | | | | |
| 45-510 | | PIPE,CLUTCH | | | |
| NA01-45-510C | 1 | (W/O A. LOCK BRAKE) | | | |
| NA20-45-510D | 1 | (W/A. LOCK BRAKE) | | | |
| 45-919C | | CLIP,PIPE | | | |
| G030-45-919A | 1 | | | | |

4927 NA35* -603489

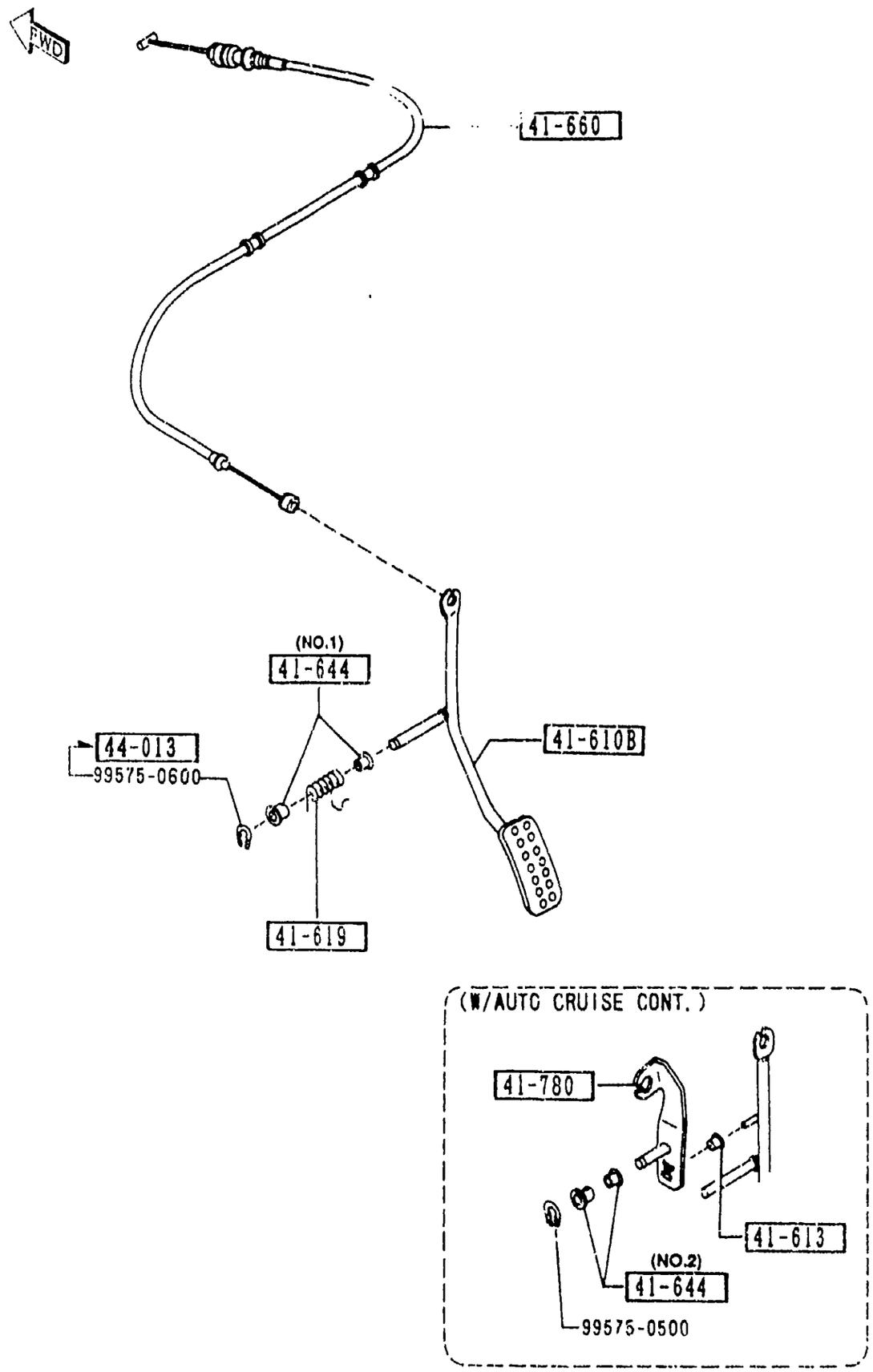


## 4160 -1 * ACCELERATOR CONTROL SYSTEM

| PART NO. | QTY | MODEL/RESTRICTION | MODEL/RESTRICTION | MODEL/RESTRICTION | FROM-TO |
|---|---|---|---|---|---|
| 41-610B | | PEDAL & ARM | | | |
| NA01-41-610A | 1 | BASE, R-PKG, PKG-A, (W/O AUTO CRUISE.CONT.) | | | -5401 |
| NA02-41-610A | 1 | M-25-ED, P.E.GR, L-PKG, PKG-B, PKG-C, (W/AUTO CRUISE.CONT.) | | | -5401 |
| NA01-41-610B | 1 | BASE, R-PKG, PKG-A, (W/O AUTO CRUISE.CONT.) | | | 5401- |
| NA02-41-610B | 1 | M-25-ED, P.E.GR, L-PKG, PKG-B, PKG-C, (W/AUTO CRUISE.CONT.) | | | 5401- |
| 41-613 | | ROLLER | | | |
| B104-41-114 | 1 | M-25-ED, P.E.GR, L-PKG, PKG-B, PKG-C, (W/AUTO CRUISE.CONT) | | | |
| 41-619 | | SPRING,RETURN | | | |
| NA01-41-619 | 1 | | | | |
| 41-644 | | BUSH | | | |
| 0259-41-644 | 2 | ONDO KOSAKUSHO M-25-ED, P.E.GR, L-PKG, PKG-B, PKG-C, (ILLUST. NO.2) (W/AUTO CRUISE.CONT.) | | | |
| B092-41-644 | 2 | OIRES KOGYO (ILLUST. NO.1) | | | -5401 |
| 41-660 | | CABLE,ACCEL. | | | |
| NB15-41-660 | 1 | | | | |
| 41-780 | | LEVER,ACCELERATOR | | | |
| NA01-41-130A | 1 | M-25-ED, P.E.GR, L-PKG, PKG-B, PKG-C, (W/AUTO CRUISE.CONT.) | | | |
| 44-013 | | WASHER,PARKING LEVER | | | |
| H380-44-013 | 1 | | | | 5401- |

5401 NA35* -619598

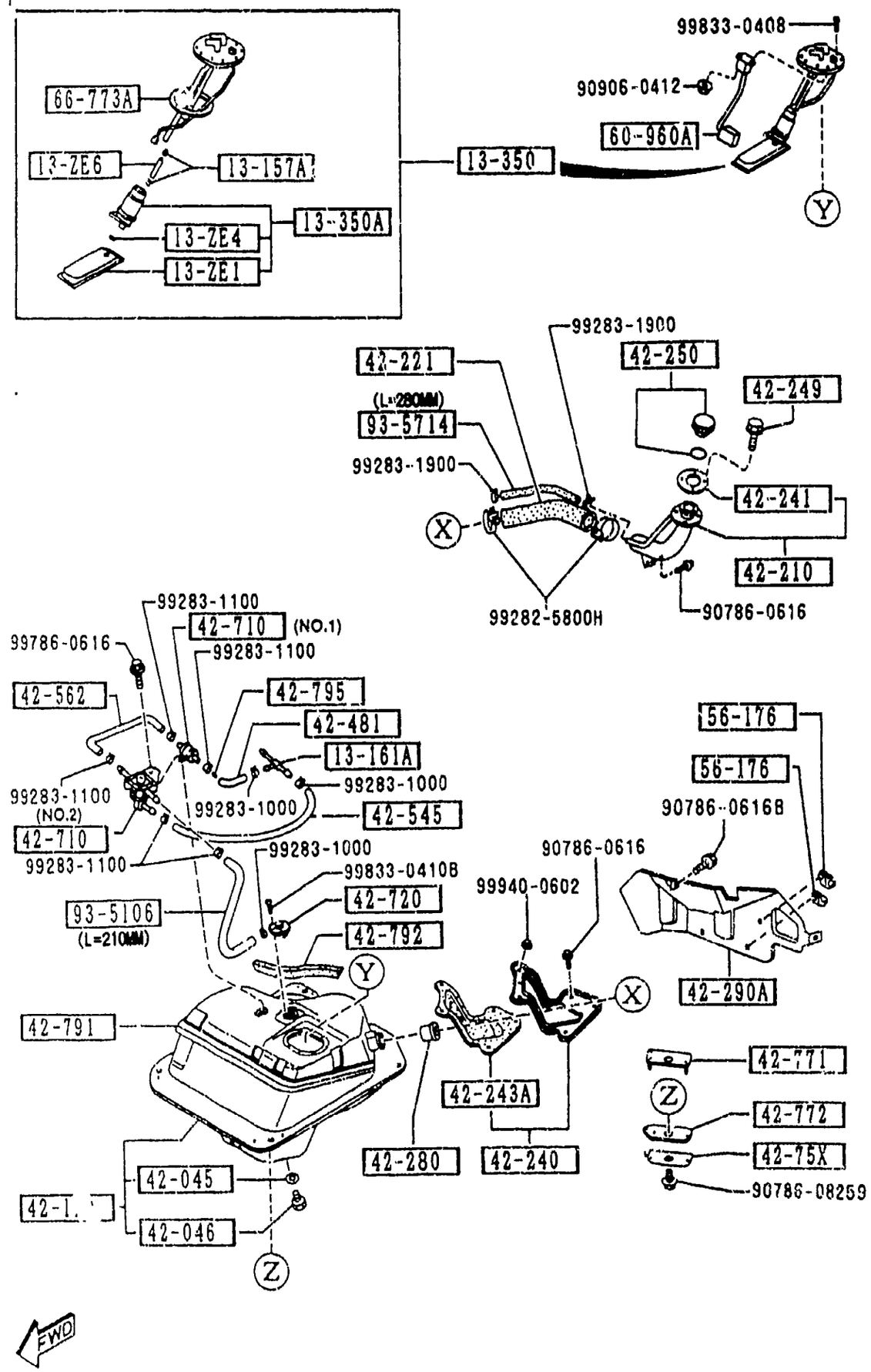






| PART NO. | QTY | MODEL/RESTRICTION | MODEL/RESTRICTION | MODEL/RESTRICTION | FROM-TO |
|---|---|---|---|---|---|
| 13-ZE1 | | FILTER,FUEL PUMP | | | |
| B61P-13-ZE1 | 1 | | | | |
| 13-ZE4 | | WASHER,LOCK-PUMP FIL TER | | | |
| FEH2-13-ZE4 | 1 | NIPPONDENSO (JAPAN) | | | |
| 13-ZE6 | | HOSE,FUEL PUMP-IN TA NK | | | |
| KL19-13-ZE6 | 1 | | | | |
| 13-157A | | CLIP | | | |
| AZ28-13-157 | 2 | | | | |
| 13-161A | | JOINT'T' | | | |
| E580-13-161 | 1 | | | | |
| 13-350 | | PUMP,FUEL | | | |
| BPE8-13-35Z | 1 | | | | |
| 13-350A | | PUMP,FUEL-SUB | | | |
| BPE8-13-350 | 1 | | | | |
| 42-045 | | GASKET,DRAIN PLUG | | | |
| U866-42-046 | 1 | | | | |
| 42-046 | | PLUG,DRAIN | | | |
| B596-42-045 | 1 | | | | |
| 42-110 | | TANK,FUEL | | | |
| NA75-42-110 | 1 | | | | |
| 42-210 | | PIPE,FILLER | | | |
| NAU1-42-210A | 1 | | | | |
| 42-221 | | HOSE,FILLER | | | |
| NA01-42-241C | 1 | | | | |
| 42-240 | | COVER,DUST | | | |
| NA75-42-240 | 1 | | | | |
| 42-241 | | GASKET,FILLER PIPE | | | |

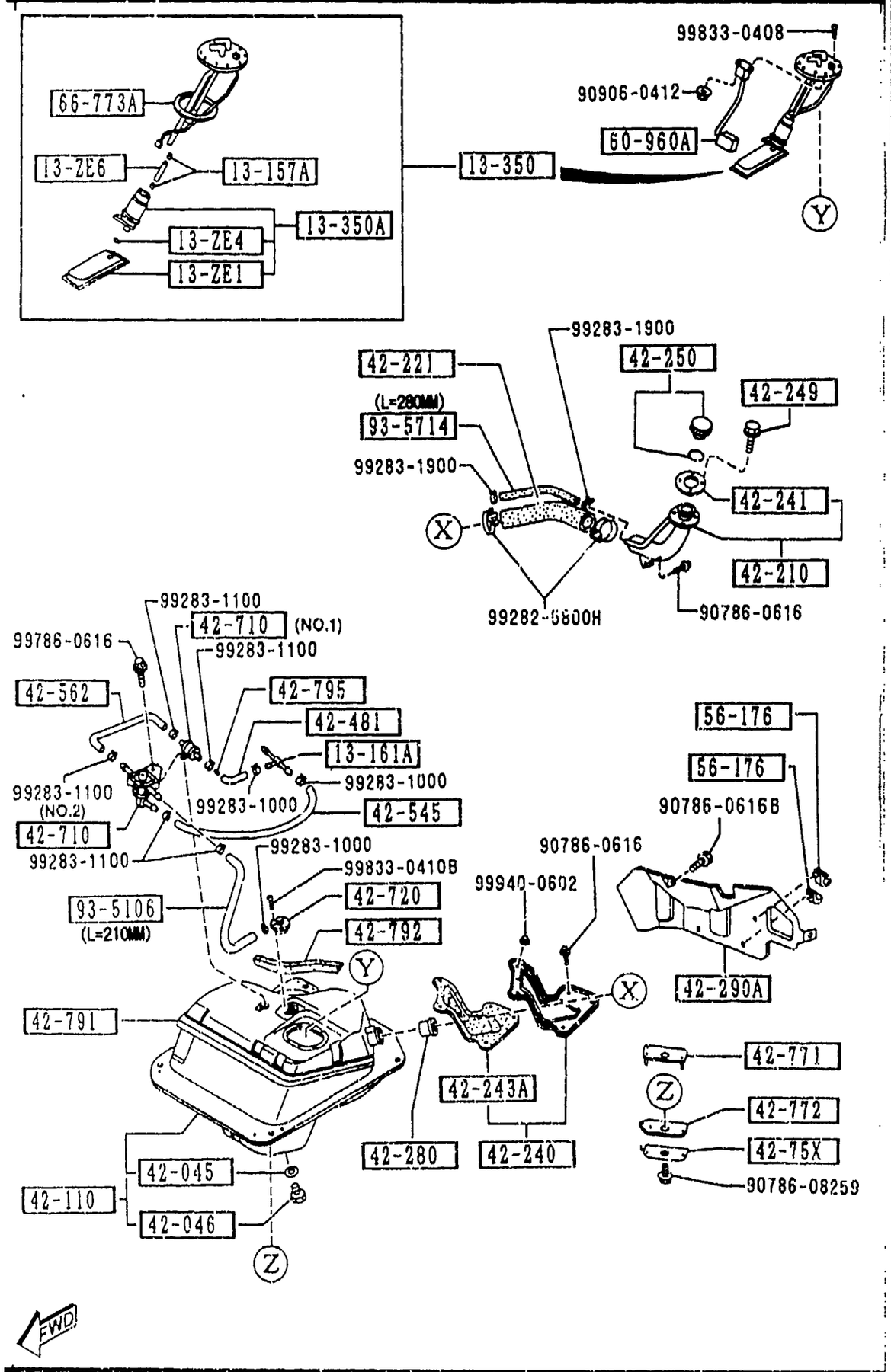






| PART NO. | QTY | MODEL/RESTRICTION | MODEL/RESTRICTION | MODEL/RESTRICTION | FROM-TO |
|---|---|---|---|---|---|
| CONT'D | | | | | |
| 0866-42-366B | 1 | | | | |
| 42-243A | | GASKET'A',DUST COVER | | | |
| NA01-42-233 | 1 | | | | |
| 42-249 | | BOLT,FILLER PIPE | | | |
| NA01-42-249B | 4 | | | | |
| 42-250 | | CAP,FILLER | | | |
| NA02-42-250 | 1 | ('95 MODEL) | | | |
| NB38-42-250 | 1 | ('96 MODEL) | | | |
| 42-280 | | VALVE,NON RETURN | | | |
| H260-42-270 | 1 | | | | |
| 42-290A | | PROTECTOR'A',FILLER PIPE | | | |
| NA01-42-291B | 1 | | | | -5106 |
| NA01-42-291C | 1 | | | | 5106- |
| 42-481 | | HOSE,FUEL | | | |
| NA75-42-561 | 1 | | | | |
| 42-545 | | HOSE,FUEL | | | |
| NA75-42-564 | 1 | | | | |
| 42-562 | | HOSE NO.2,BREATHER | | | |
| NA03-42-562 | 1 | | | | |
| 42-710 | | VALVE,CHECK | | | |
| GA5R-42-910 | 1 | (ILLUST. NO.1) | | | |
| NA75-42-910 | 1 | (ILLUST. NO.2) | | | |
| 42-720 | | VALVE,FUEL VAPOR. | | | |
| BC1M-42-980 A (BC1M-42-980A) | 1 | | | | -5501 |
| BC1M-42-980A | 1 | | | | 5501- |
| 42-75X | | REINF.,FUEL TANK | | | |
| NA01-42-77X | 4 | | | | |

5106 NA35* -612163
5501 NA35* -620210

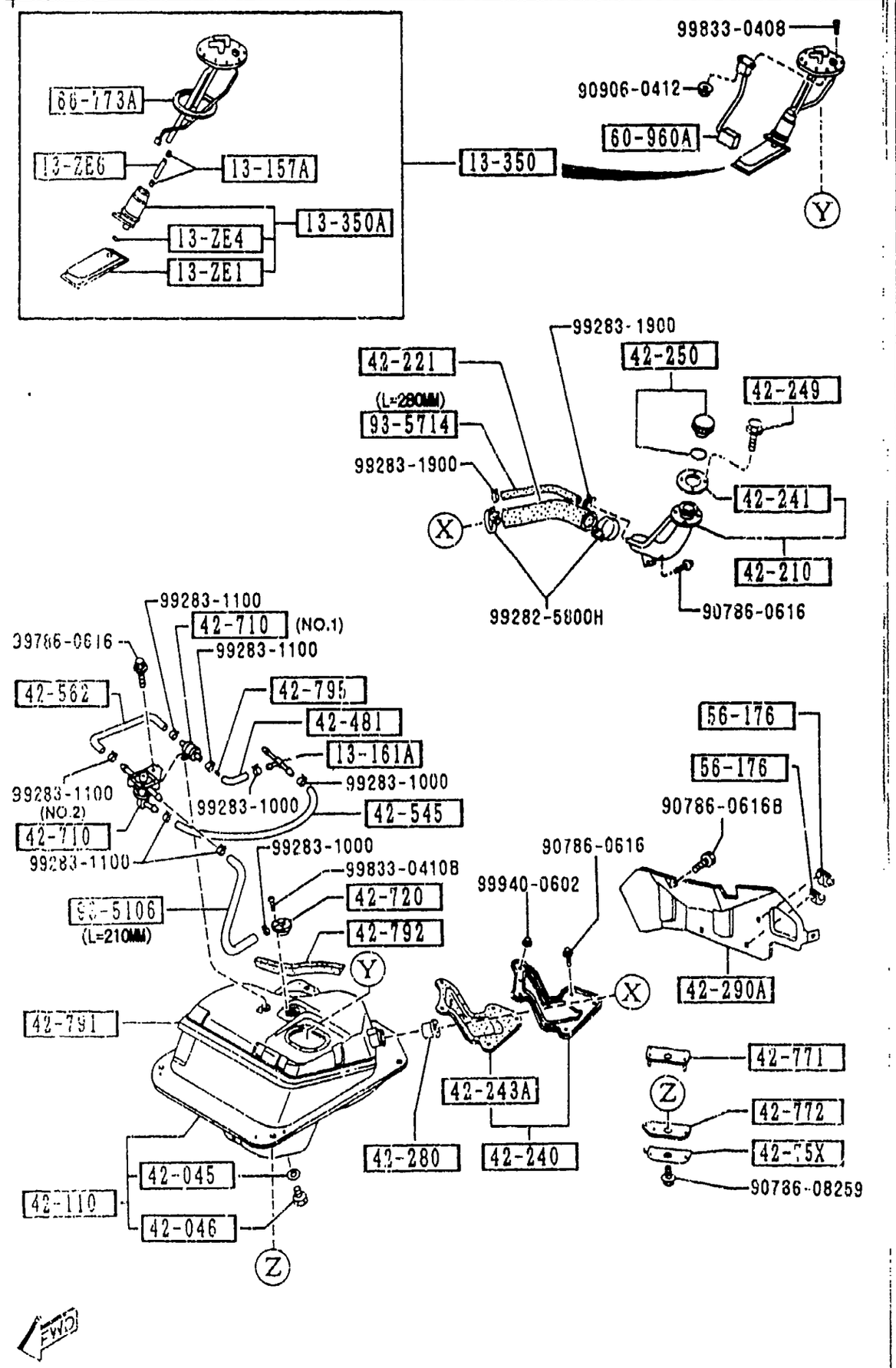


## 4200 -3 * FUEL TANK

| PART NO. | QTY | MODEL/RESTRICTION | MODEL/RESTRICTION | MODEL/RESTRICTION | FROM-TO |
|---|---|---|---|---|---|
| 42-771<br>NA01-42-771 | 4 | RUBBER(UP),MOUNT-TANK | | | |
| 42-772<br>NA01-42-772 | 4 | RUBBER(LWR),MOUNT-TANK | | | |
| 42-791<br>NA01-42-761 | 1 | PAD,FUEL TANK | | | |
| 42-792<br>NA01-42-762 | 1 | PAD,FUEL TANK | | | |
| 42-795<br>GN51-42-795 | 1 | INSERT | | | |
| 56-176<br>G030-56-176 | 3 | HOLDER,JACK HANDLE | | | |
| 60-960A<br>NA75-60-960A | 1 | GAUGE,FUEL TANK | | | |
| 66-773A<br>J004-60-962 | 1 | GASKET | | | |
| 93-5106<br>99351-06999 | 1 | HOSE<br>L=1M CUT IT TO USE | | | |
| 93-5714<br>99357-14999 | 1 | HOSE<br>L=1M CUT IT TO USE | | | |

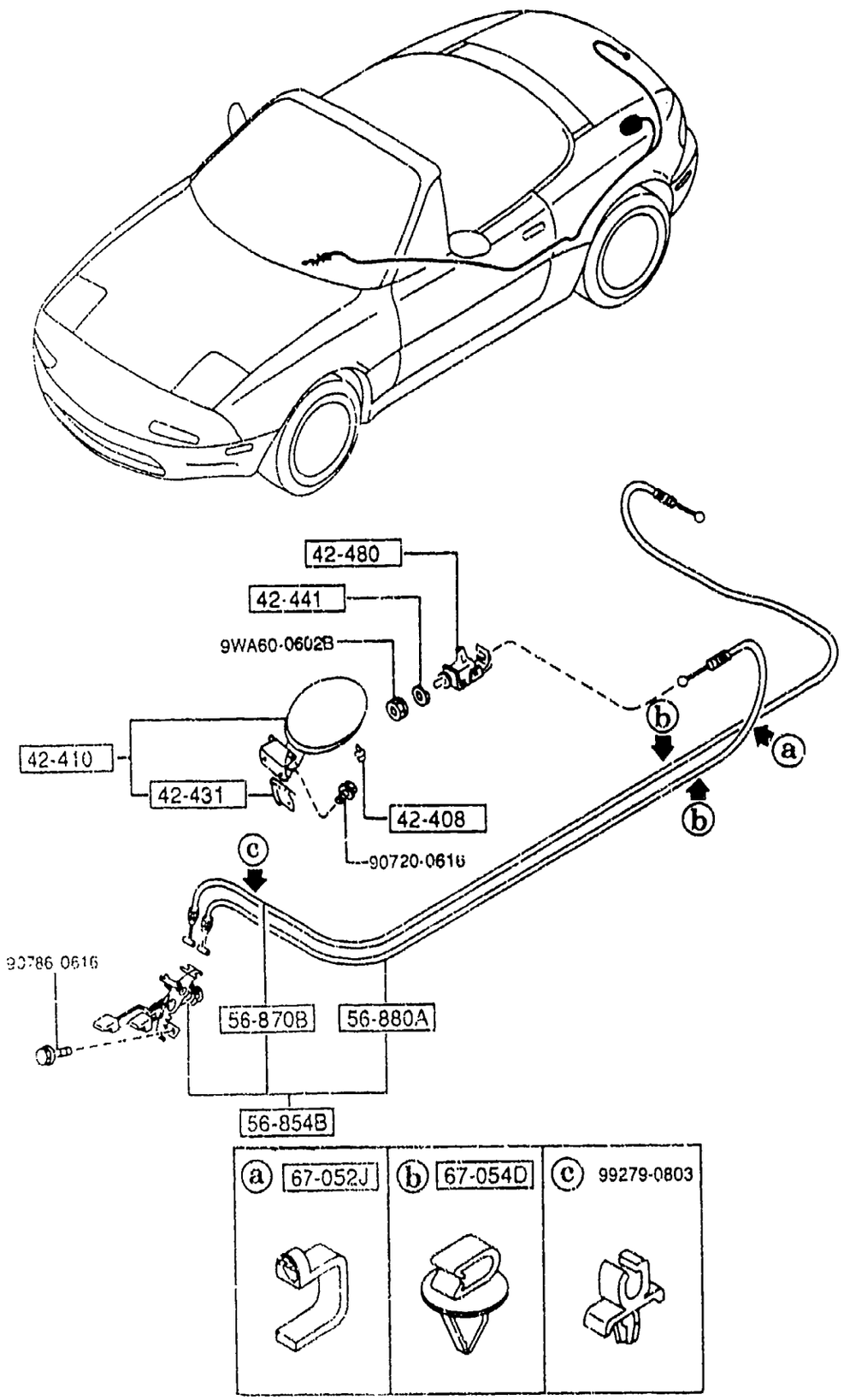


## 4210 -1 * FUEL LID OPENER

| PART NO. | QTY | MODEL/RESTRICTION | MODEL/RESTRICTION | MODEL/RESTRICTION | FROM-TO |
|---|---|---|---|---|---|
| 42-408 | | STOPPER,FILLER LID | | | |
| 0107-70-491 | 2 | | | | |
| 42-410 | | LID,FUEL FILLER | | | |
| NA01-42-410B | 1 | | | | |
| 42-431 | | SPRING LIFT,LID | | | |
| H043-42-431D | 1 | | | | |
| 42-441 | | WASHER,LID OPENER | | | |
| NA01-56-896 | 1 | | | | |
| 42-480 | | OPENER,FILLER LID | | | |
| B095-56-890A | 1 | | | | |
| 56-854B | | OPENER,T/LID & F/LID | | | |
| N007-56-850A | 1 | | | | |
| 56-870B | | CABLE,T/LID OPENER | | | |
| N007-56-880A | 1 | | | | |
| 56-880A | | CABLE,F/LID OPENER | | | |
| NA01-56-890A | 1 | | | | |
| 67-052J | | CLIP | | | |
| B001-67-051 | 1 | | | | |
| 67-054D | | CLIP | | | |
| H260-67-054 | 2 | | | | |

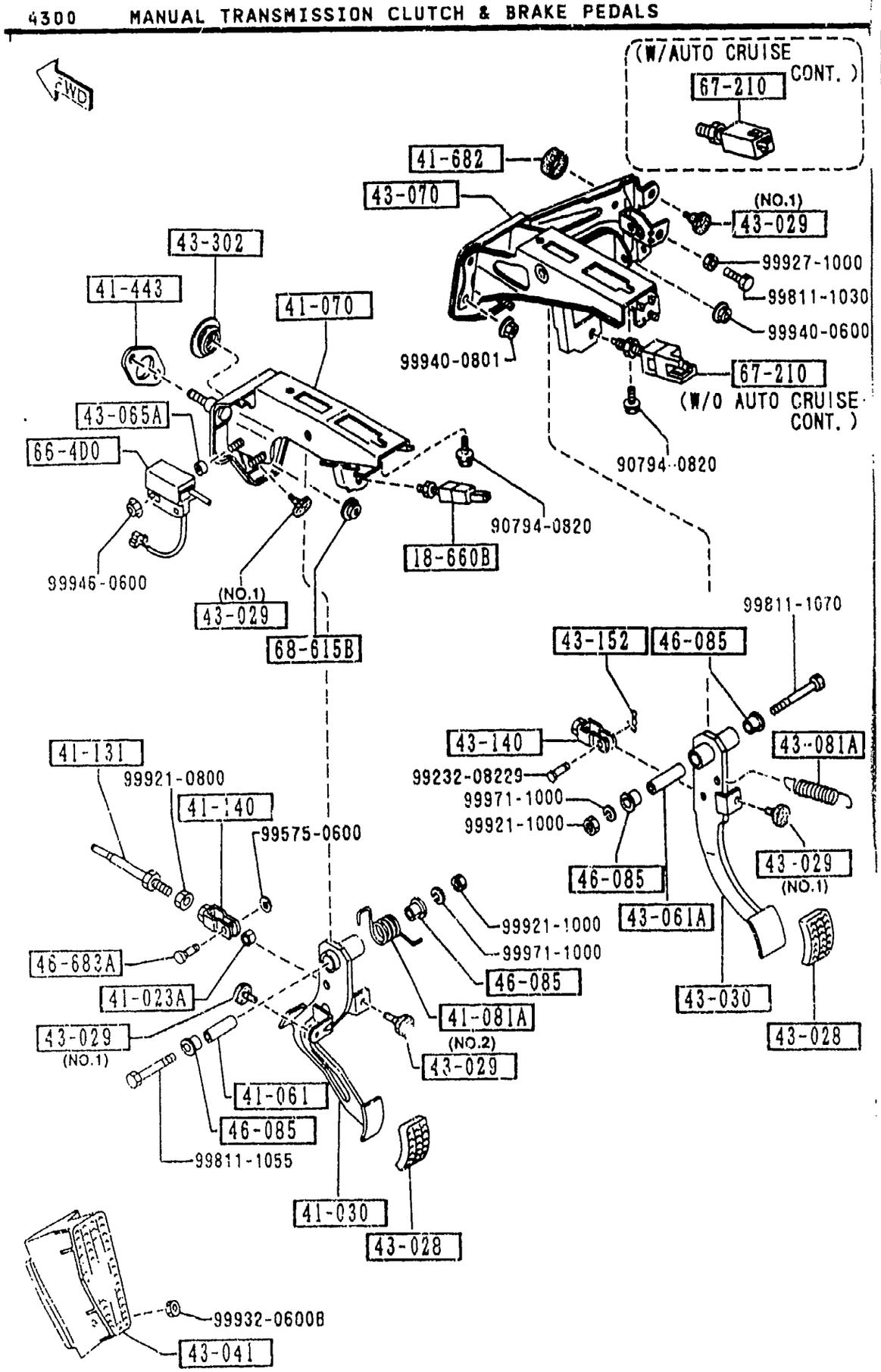






| PART NO. | QTY | MODEL/RESTRICTION | MODEL/RESTRICTION | MODEL/RESTRICTION | FROM-TO |
|---|---|---|---|---|---|
| 18-660B | | SWITCH,CLUTCH | | | |
| LA01-66-490A | 1 | | | | |
| 41-023A | | BUSH | | | |
| 0727-41-023 | 1 | | | | |
| 41-030 | | PEDAL,CLUTCH | | | |
| NA01-41-030C | 1 | | | | -5201 |
| A (NA01-41-030D) | | | | | |
| NA01-41-030D | 1 | | | | 5201- |
| 41-061 | | SPACER | | | |
| 0727-41-061 | 1 | | | | |
| 41-070 | | BRACKET,MASTER CYL. | | | |
| NA01-41-070B | 1 | | | | |
| 41-081A | | SPRING,RETURN | | | |
| BR70-41-081 | 1 | | | | |
| 41-131 | | ROD,PUSH | | | |
| 0824-41-131 | 1 | | | | |
| 41-140 | | FORK,CLUTCH | | | |
| NA01-41-140B | 1 | | | | |
| 41-443 | | GASKET | | | |
| NA01-41-443 | 1 | | | | |
| 41-682 | | RUBBER,STOP | | | |
| 1456-41-682 | 1 | M-25-ED, P.E.GR, L-PKG, PKG-B, PKG-C, (W/AUTO CRUISE.CONT.) | | | |
| 43-028 | | PAD,PEDAL | | | |
| B092-43-028 | 2 | | | | |
| 43-029 | | RUBBER,STOPPER | | | |
| B001-43-029 | 4 | KUROISHI TEKKO (ILLUST. NO.1) | | | |
| G030-43-029 | 1 | OIRES KOGYO (ILLUST. NO.2) | | | |

5201 NA35* -614193

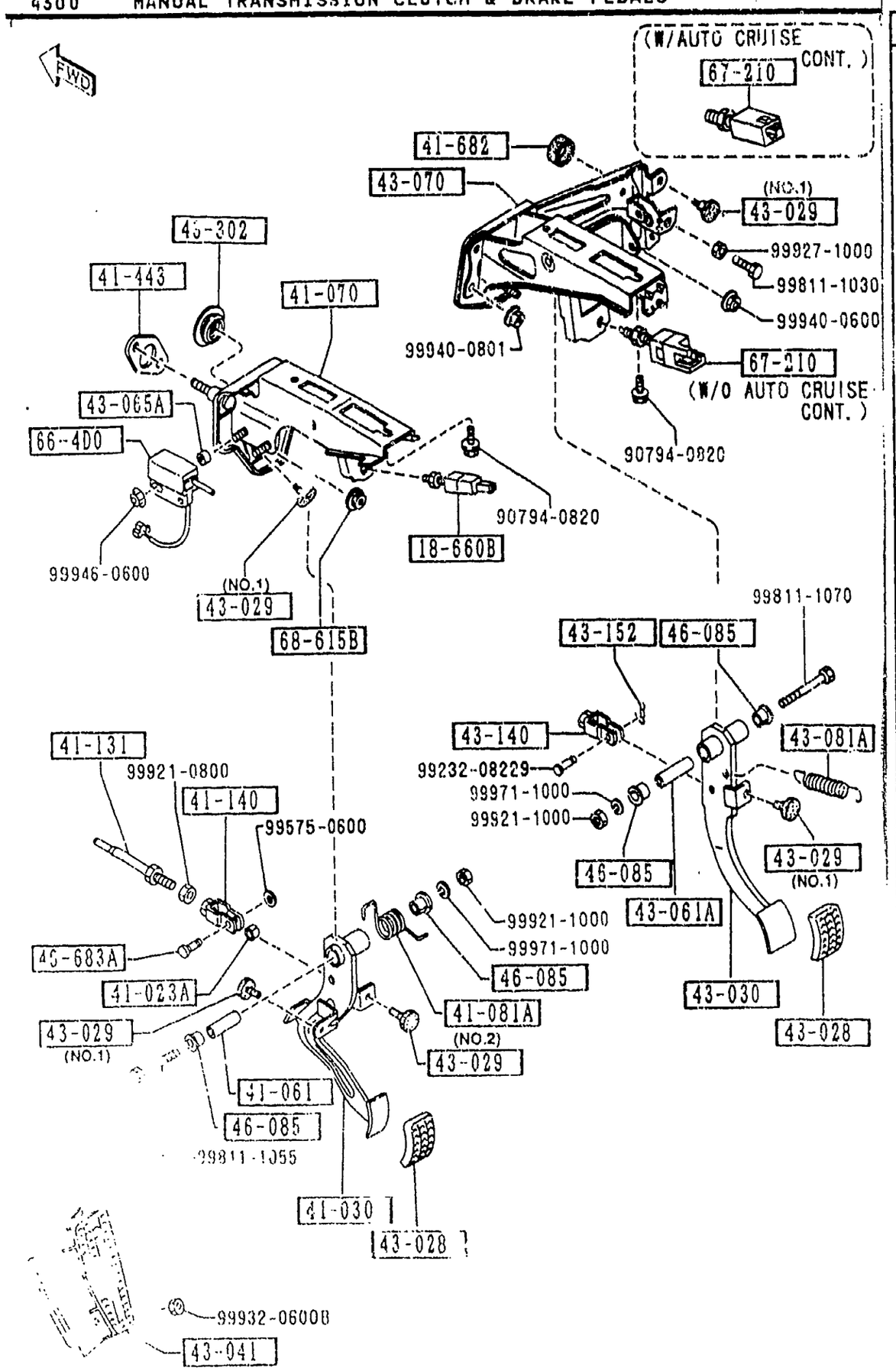






| PART NO. | QTY | MODEL/RESTRICTION | MODEL/RESTRICTION | MODEL/RESTRICTION | FROM-TO |
|---|---|---|---|---|---|
| 43-030 | | PEDAL,BRAKE | | | |
| NA01-43-030 | 1 | | | | -5401 |
| AN(NA01-43-030A) | | | | | |
| NA01-43-030A | 1 | | | | 5401-5508 |
| A (NA01-43-030B) | | | | | |
| NA01-43-030B | 1 | | | | 5508- |
| 43-041 | | REST,FOOT | | | |
| NA01-43-041 | 1 | | | | |
| 43-061A | | PIPE,PEDAL | | | |
| 0866-43-062 | 1 | | | | |
| 43-065A | | SPACER | | | |
| BR70-43-065 | 1 | | | | |
| 43-070 | | BRACKET,MASTER CYL. | | | |
| NA01-43-070A | 1 | BASE, R-PKG, PKG-A, (W/O AUTO CRUISE.CONT.) | | | -5401 |
| NA02-43-070A | 1 | M-25-ED, P.E.GR, L-PKG, PKG-B, PKG-C, (W/AUTO CRUISE.CONT.) | | | -5401 |
| NA01-43-070B | 1 | BASE, R-PKG, PKG-A, (W/O AUTO CRUISE.CONT.) | | | 5401- |
| NA02-43-070B | 1 | M-25-ED, P.E.GR, L-PKG, PKG-B, PKG-C, (W/AUTO CRUISE.CONT.) | | | 5401- |
| 43-081A | | SPRING,RETURN-BRAKE | | | |
| B092-41-081 | 1 | | | | |
| 43-140 | | FORK,BRAKE | | | |
| 1524-43-141 | 1 | | | | |
| 43-152 | | PIN,SNAP | | | |
| D001-43-152 | 1 | | | | |
| 43-302 | | GROMMET,BRAKE PEDAL | | | |
| B180-43-302 | 1 | | | | |

5401 NA35* -619598
5508 NA35* -620210

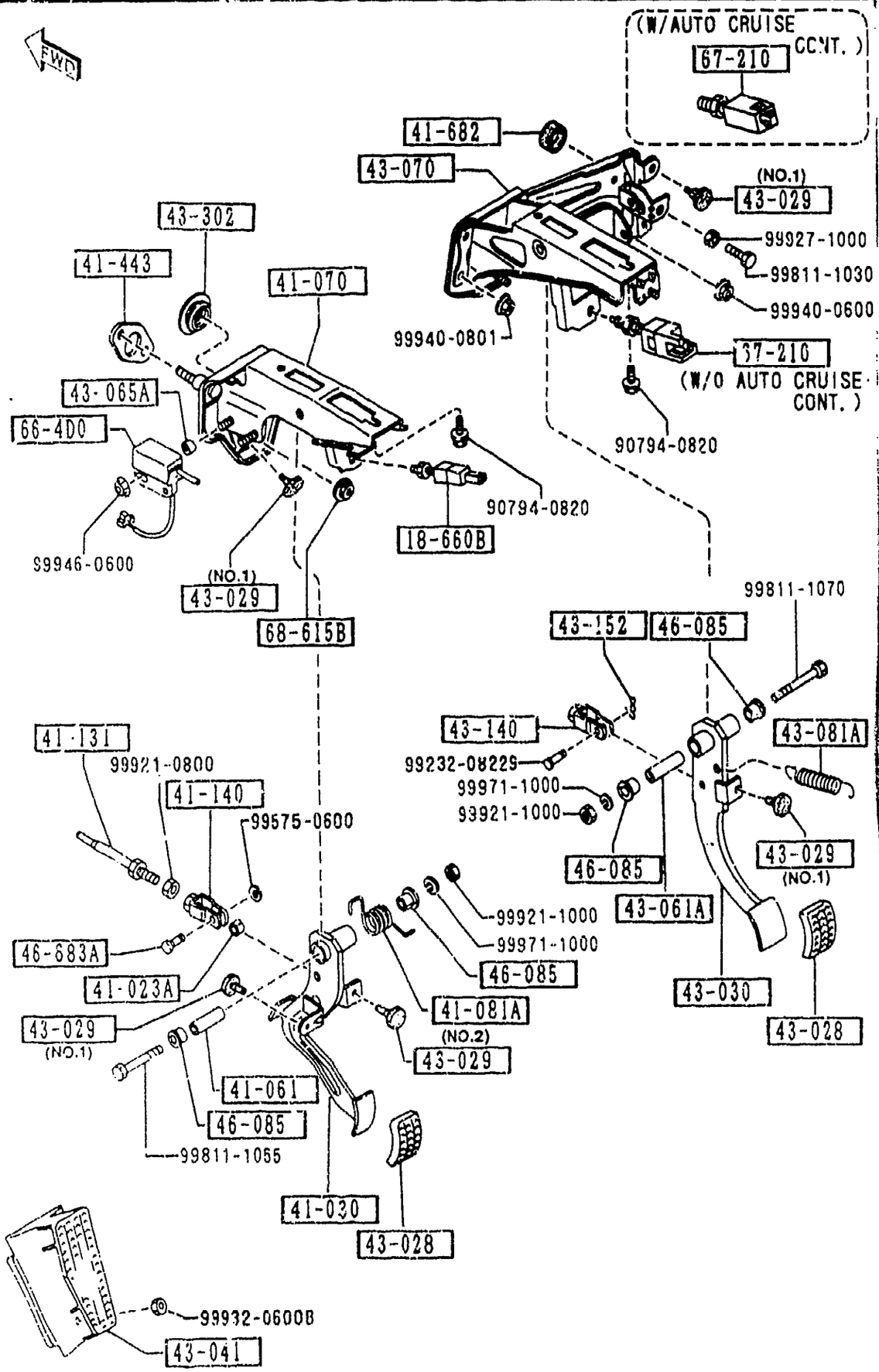






| PART NO. | QTY | MODEL/RESTRICTION | MODEL/RESTRICTION | MODEL/RESTRICTION | FROM-TO |
|---|---|---|---|---|---|
| 46-085 | | BUSH | | | |
| 1015-46-085 | 4 | | | | |
| 46-683A | | PIN | | | |
| 0223-46-683 | 1 | | | | |
| 66-4D0 | | SWITCH,CLUTCH CUT | | | |
| FB01-66-4D0 | 1 | | | | |
| 67-210 | | SWITCH,STOP-LAMP | | | |
| BR70-66-490A | 1 | M-25-ED, P.E.GR, L-PKG, PKG-B, PKG-C, (W/AUTO CRUISE.CONT.) | | | |
| B001-66-490A | 1 | BASE, R-PKG, PKG-A, (W/O AUTO CRUISE.CONT.) | | | |
| 68-615B | | NUT,FLANGE-CAP | | | |
| B100-68-615 | 1 | | | | |

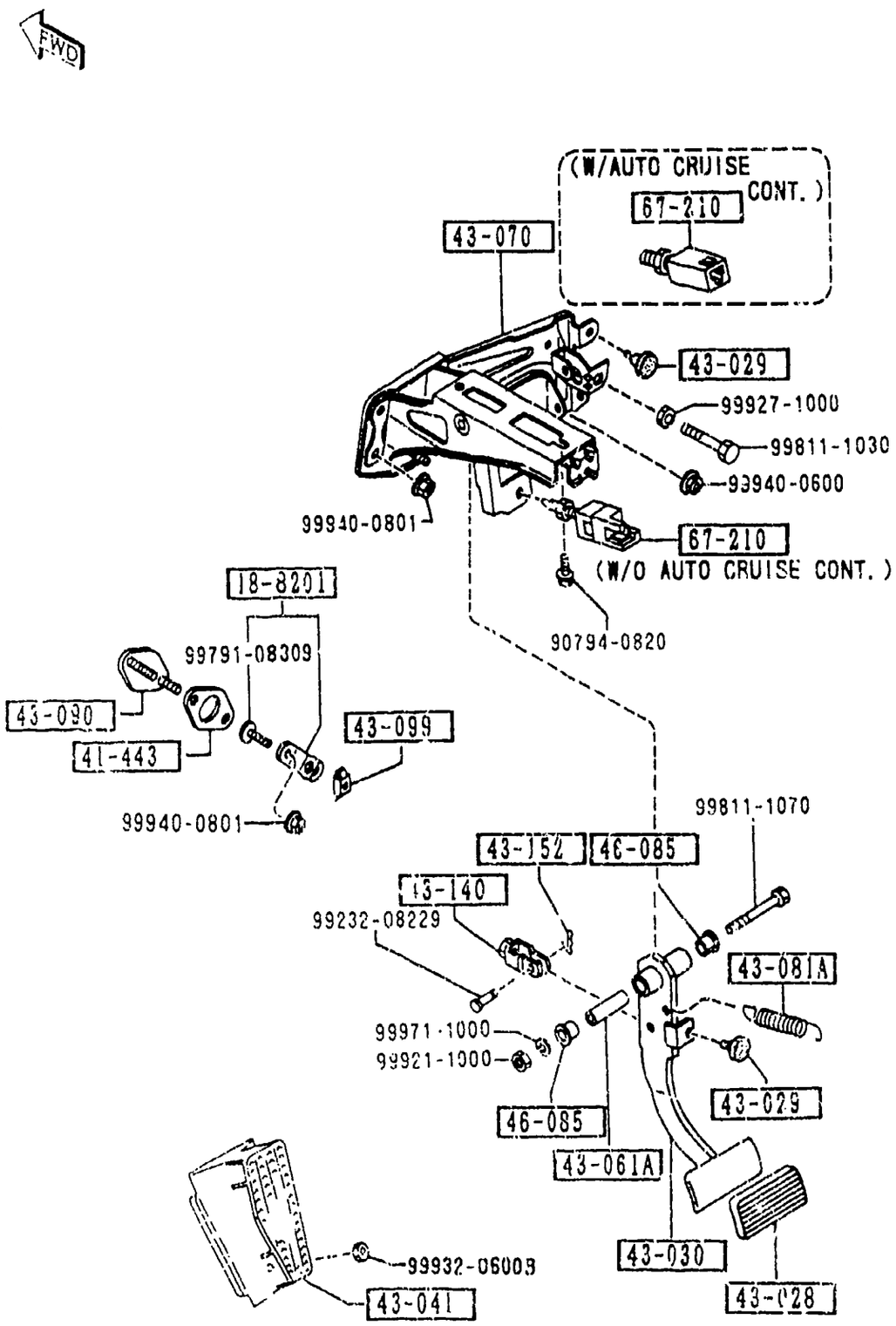




| PART NO. | QTY | MODEL/RESTRICTION | MODEL/RESTRICTION | MODEL/RESTRICTION | FROM-TO |
|---|---|---|---|---|---|
| 18-8201 | | BRACKET,CONTROL UNIT | | | |
| NA75-18-945B | 1 | | | | |
| 41-443 | | GASKET | | | |
| NA01-41-443 | 1 | | | | |
| 43-028 | | PAD,PEDAL | | | |
| 0268-43-028 | 1 | | | | |
| 43-029 | | RUBBER,STOPPER | | | |
| B001-43-029 | 2 | KUROISHI TEKKO | | | |
| 43-030 | | PEDAL,BRAKE | | | |
| NA03-43-030 AN(NA03-43-030A) | 1 | | | | -5401 |
| NA03-43-030A A (NA03-43-030B) | 1 | | | | 5401-5508 |
| NA03-43-030B | 1 | | | | 5508- |
| 43-041 | | REST,FOOT | | | |
| NA01-43-041 | 1 | | | | |
| 43-061A | | PIPE,PEDAL | | | |
| 0866-43-062 | 1 | | | | |
| 43-070 | | BRACKET,MASTER CYL. | | | |
| NA01-43-070A | 1 | BASE, R-PKG, PKG-A, (W/O AUTO CRUISE.CONT.) | | | -5401 |
| NA02-43-070A | 1 | M-25-ED, P.E.GR, L-PKG, PKG-B, PKG-C, (W/AUTO CRUISE.CONT.) | | | -5401 |
| NA01-43-070B | 1 | BASE, R-PKG, PKG-A, (W/O AUTO CRUISE.CONT.) | | | 5401- |
| NA02-43-070B | 1 | M-25-ED, P.E.GR, L-PKG, PKG-B, PKG-C, (W/AUTO CRUISE.CONT.) | | | 5401- |
| 43-081A | | SPRING,RETURN-BRAKE | | | |
| B092-41-081 | 1 | | | | |

5401 NA35* -619598
5508 NA35* -620210

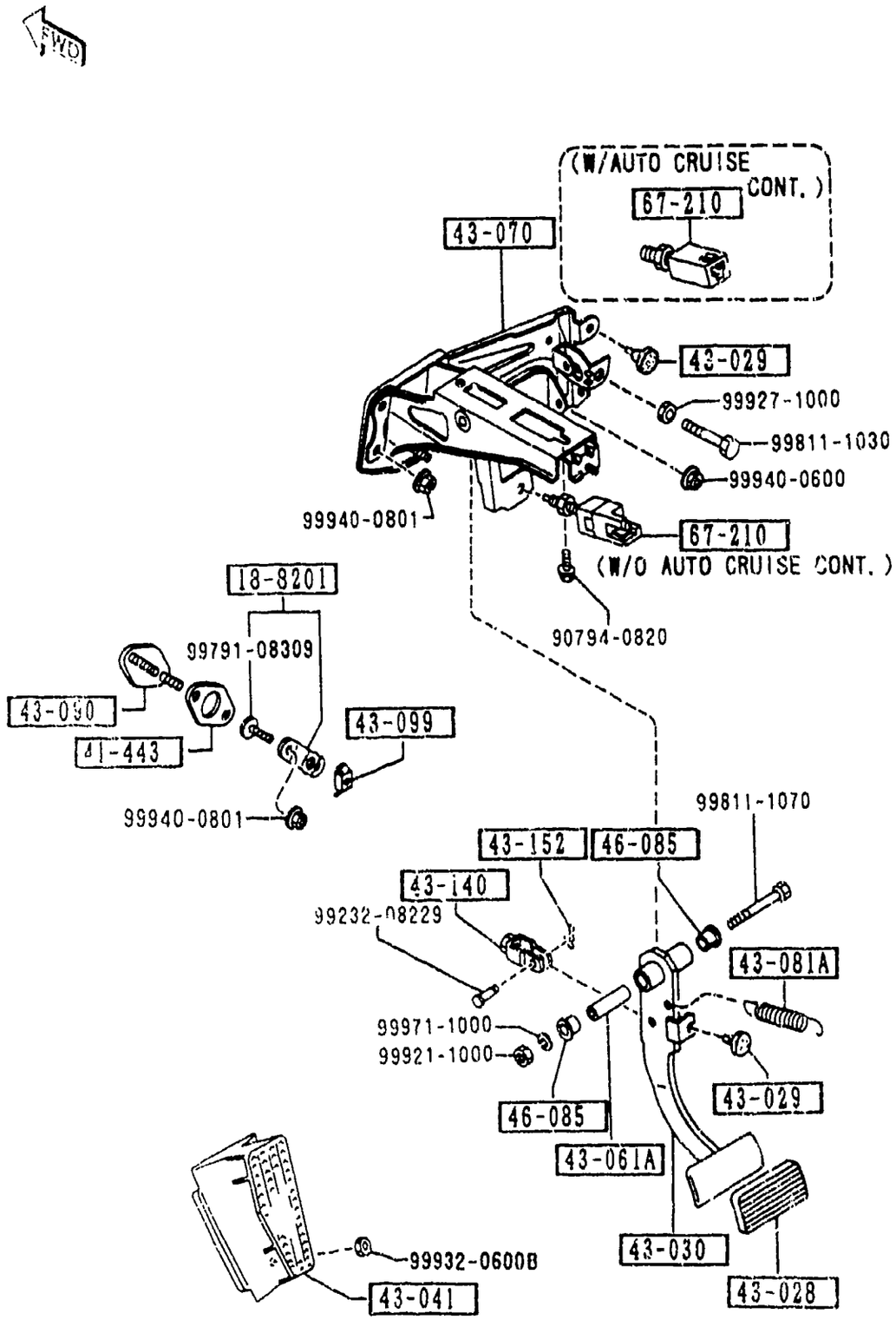


## 4300A -2 * AUTOMATIC TRANSMISSION BRAKE PEDAL

| PART NO. | QTY | MODEL/RESTRICTION | MODEL/RESTRICTION | MODEL/RESTRICTION | FROM-TO |
|---|---|---|---|---|---|
| 43-090<br>NA03-43-090 | 1 | PLATE | | | |
| 43-099<br>HF23-43-099 | 1 | HOLDER,PLATE | | | |
| 43-140<br>1524-43-141 | 1 | FORK,BRAKE | | | |
| 43-152<br>D001-43-152 | 1 | PIN,SNAP | | | |
| 46-085<br>1015-46-085 | 2 | BUSH | | | |
| 67-210<br>BR70-66-490A | 1 | SWITCH,STOP-LAMP<br>M-25-ED, P.E.GR, L-PKG, PKG-B, PKG-C, (W/AUTO CRUISE.CONT.) | | | |
| B001-66-490A | 1 | BASE, R-PKG, PKG-A, (W/O AUTO CRUISE.CONT.) | | | |

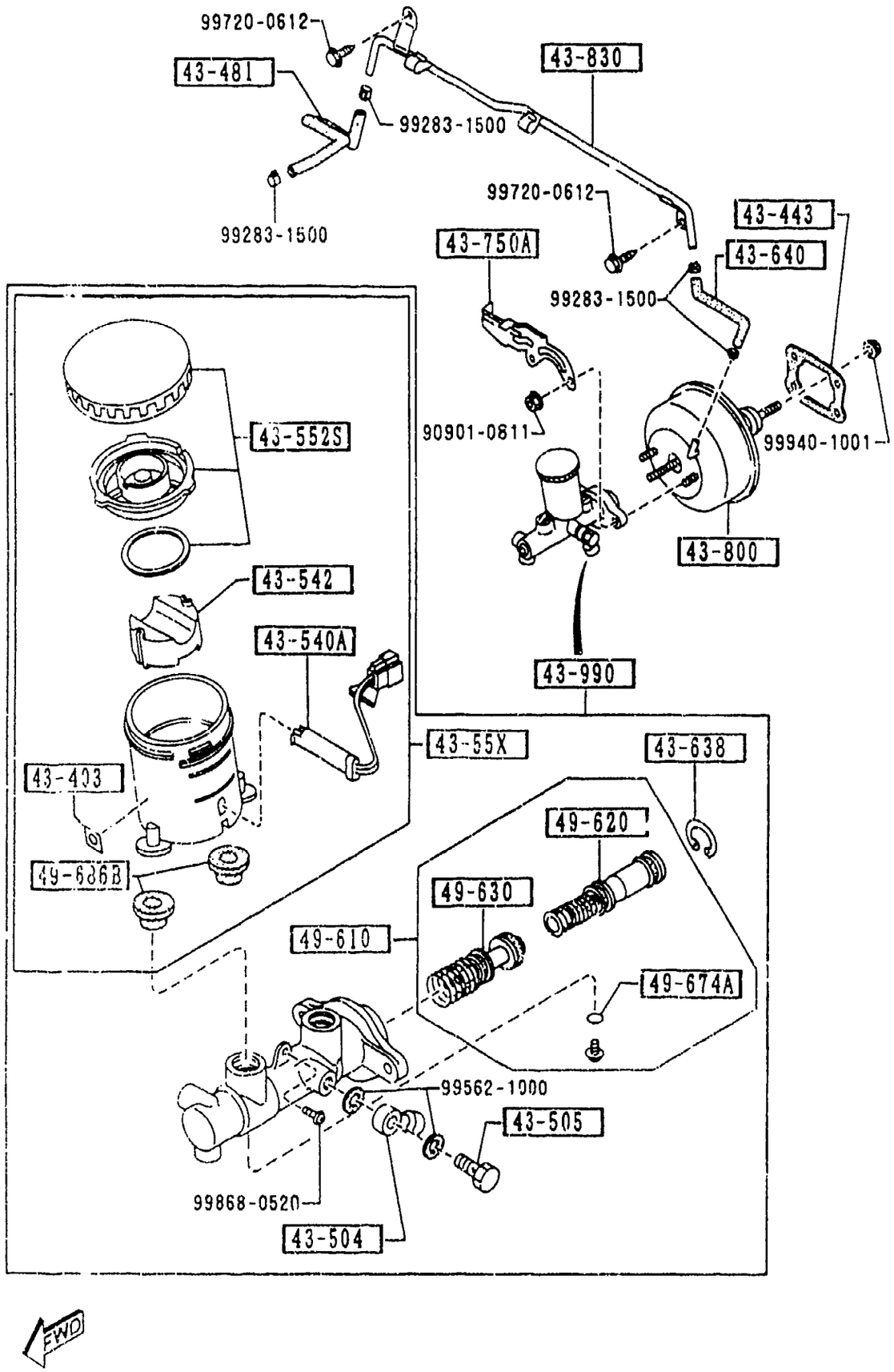


## 4340 -1 BRAKE MASTER CYLINDER & POWER BRAKE (W/O ANTILOCK BRAKE)

| PART NO. | QTY | MODEL/RESTRICTION | MODEL/RESTRICTION | MODEL/RESTRICTION | FROM-TO |
|---|---|---|---|---|---|
| 43-403<br>TA04-43-403A | 1 | LABEL,ISO | | | |
| 43-443<br>H001-43-443 | 1 | GASKET,VAC POWER ASSIST<br>NON ASBESTOS | | | |
| 43-481<br>NA75-43-481 | 1 | HOSE,VACUUM | | | |
| 43-504<br>W023-43-504 | 1 | JOINT,PIPE | | | |
| 43-505<br>W023-43-505 | 1 | BOLT,CONNECTOR | | | |
| 43-540A<br>GA97-43-540 | 1 | SENSOR,RESERVE TANK | | | |
| 43-542<br>3597-43-542 | 1 | FLOAT | | | |
| 43-55X<br>B2Y6-43-55X | 1 | SET,TANK | | | |
| 43-552S<br>D001-49-650A | 1 | CAP SET,RESERVE TANK | | | |
| 43-638<br>GA02-49-638 | 1 | RING,RETAINING | | | |
| 43-640<br>NA01-43-640 | 1 | HOSE,VACUUM | | | |
| 43-750A<br>NA02-43-750A | 1 | HOLDER,P.B.VALVE | | | |
| 43-800<br>NA75-43-800 | 1 | VACUUM POWER ASSIST | | | |
| 43-830 | | PIPE,VACUUM | | | |

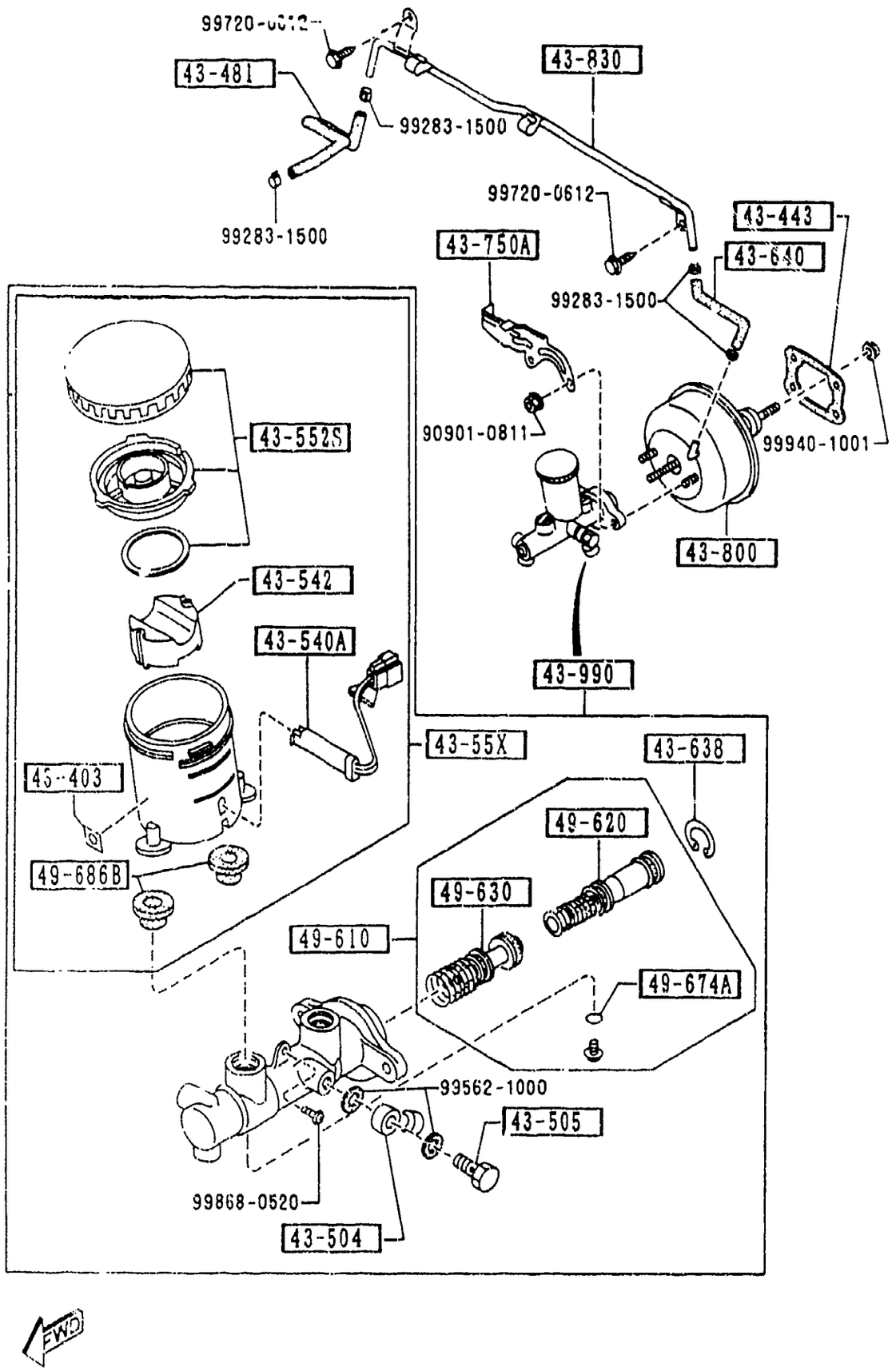


## 4340 -2 * BRAKE MASTER CYLINDER & POWER BRAKE (W/O ANTILOCK BRAKE)

| PART NO. | QTY | MODEL/RESTRICTION | MODEL/RESTRICTION | MODEL/RESTRICTION | FROM-TO |
|---|---|---|---|---|---|
| CONT'D | | | | | |
| NA01-43-830A | 1 | | | | |
| +---------+ | | | | | |
| \| 43-990 \| | | CYL.,TANDEM MASTER | | | |
| +---------+ | | | | | |
| NA01-43-40Z | 1 | | | | |
| +---------+ | | | | | |
| \| 49-610 \| | | PARTS KIT,INN.-BRAKE | | | |
| +---------+ | | | | | |
| BW0A-43-61Z | 1 | | | | |
| +---------+ | | | | | |
| \| 49-620 \| | | PISTON,PRIMARY | | | |
| +---------+ | | | | | |
| BW0A-43-62Z | 1 | | | | |
| +---------+ | | | | | |
| \| 49-630 \| | | PISTON,FLOATING | | | |
| +---------+ | | | | | |
| BW0A-43-63Z | 1 | | | | |
| +---------+ | | | | | |
| \| 49-674A \| | | RING,'O'-MASTER CYL. | | | |
| +---------+ | | | | | |
| 99541-20403 | 1 | | | | |
| +---------+ | | | | | |
| \| 49-686B \| | | BUSH,ELBOW JOINT | | | |
| +---------+ | | | | | |
| F100-49-686 | 2 | | | | |

(-5901)

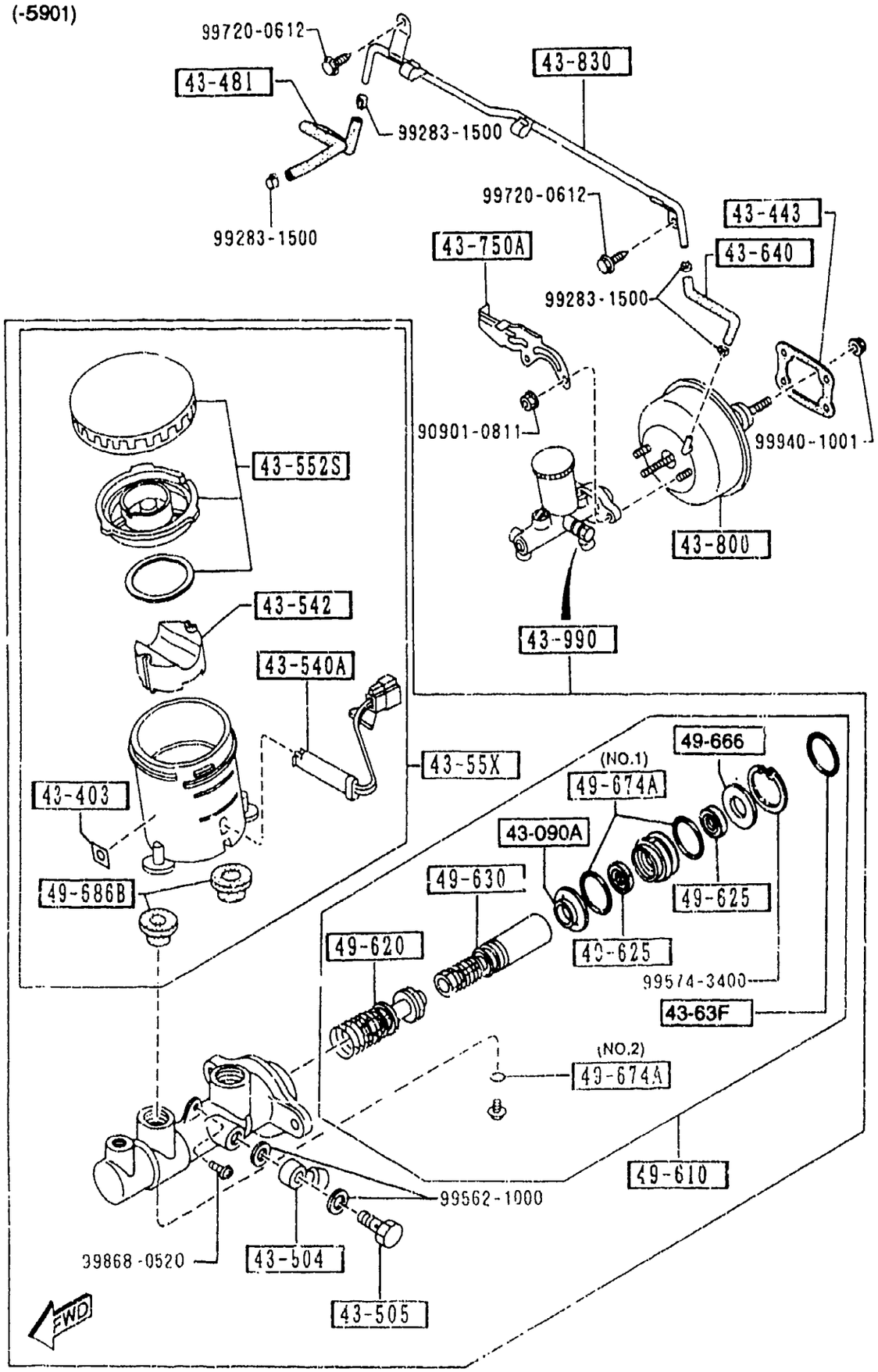




(5901-)

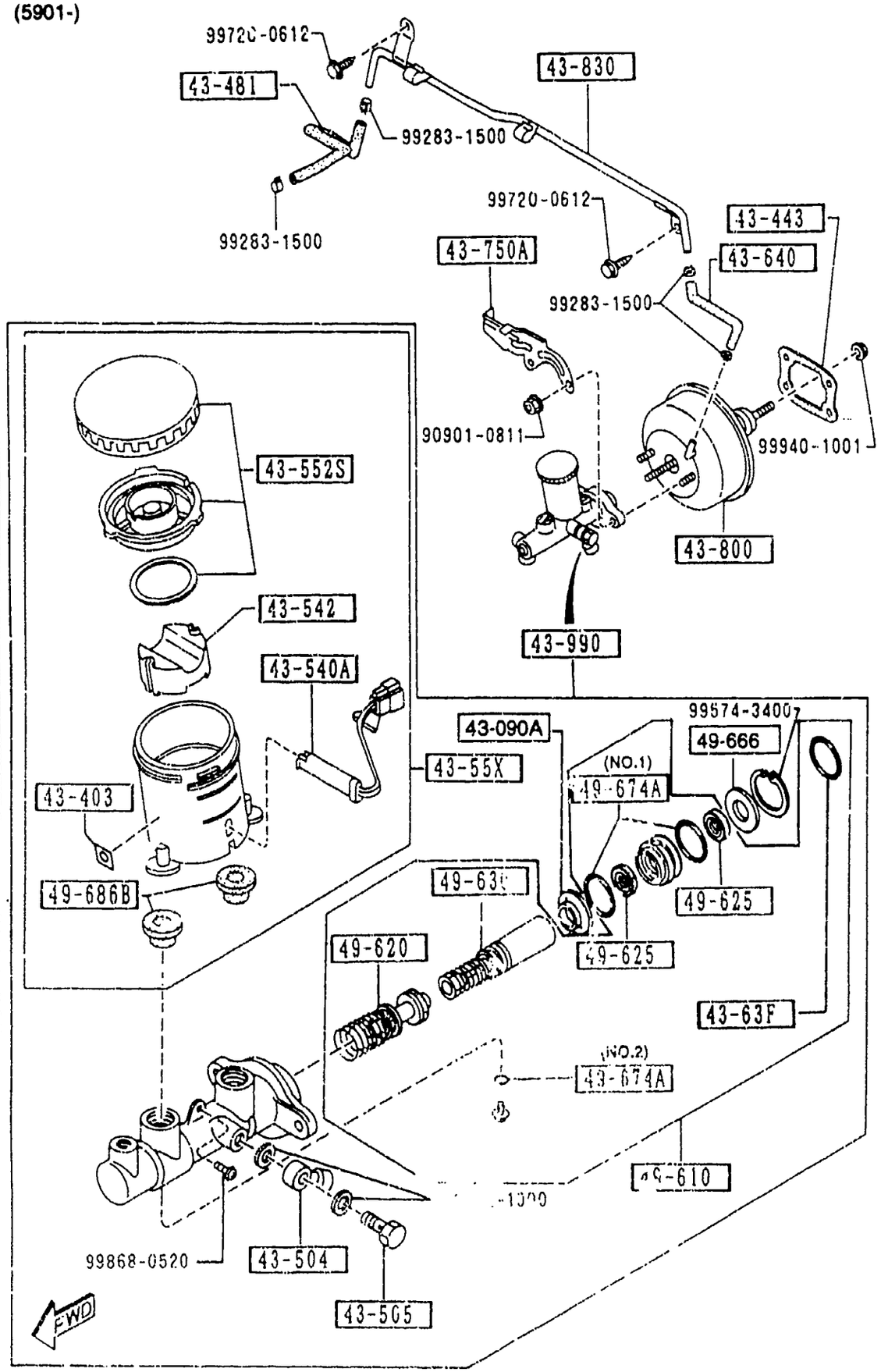




AUNA05

(-5901)

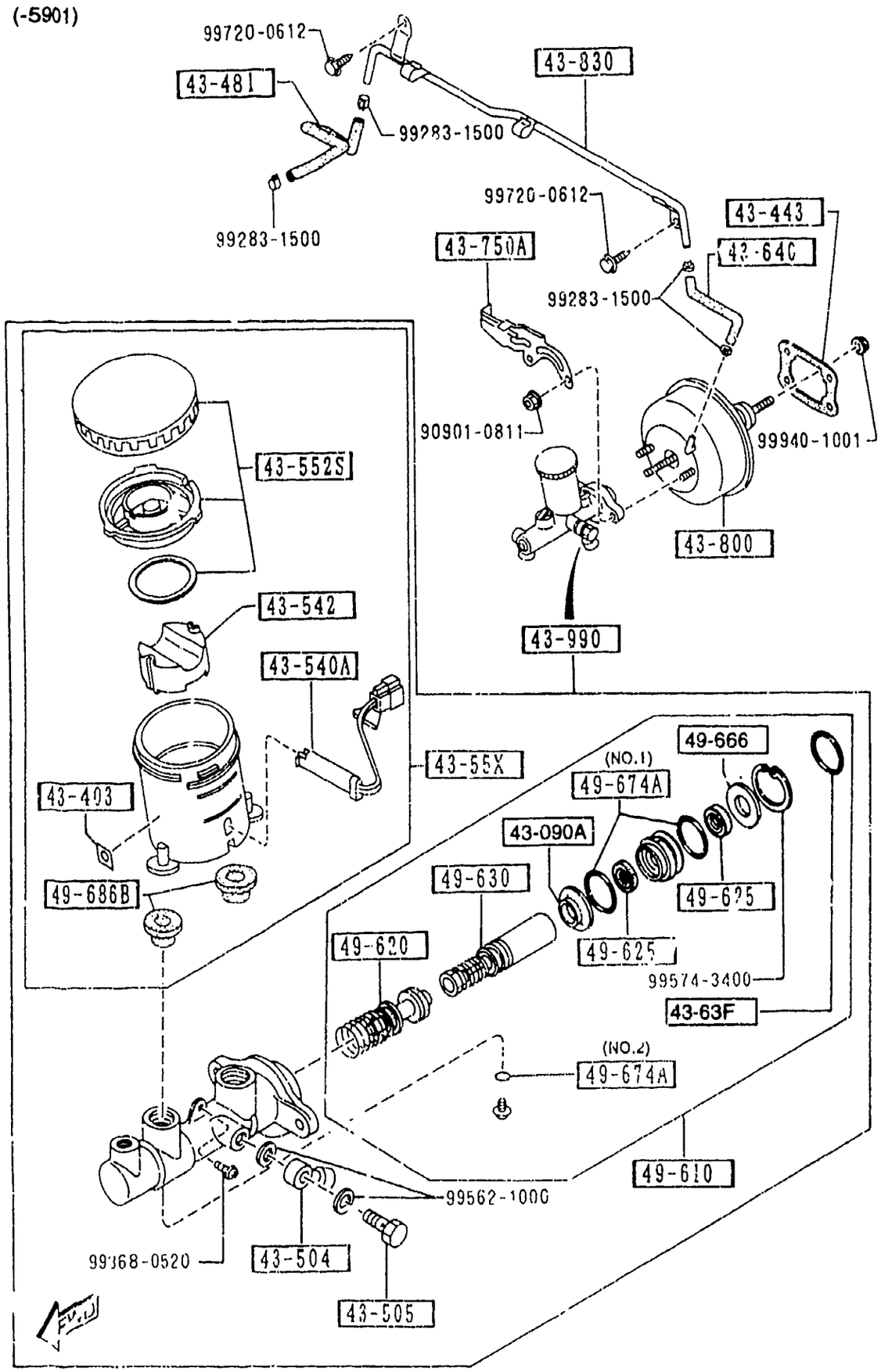


4340 A-1 BRAKE MASTER CYLINDER & POWER BRAKE
(W/ANTILOCK BRAKE)

| PART NO. | QTY | MODEL/RESTRICTION | MODEL/RESTRICTION | MODEL/RESTRICTION | FROM-TO |
|---|---|---|---|---|---|
| 43-090A<br>B252-49-514 | 1 | STOPPER | | | |
| 43-403<br>TA04-43-403A | 1 | LABEL,ISO | | | |
| 43-443<br>H001-43-443 | 1 | GASKET,VAC POWER ASSIST<br>NON ASBESTOS | | | |
| 43-481<br>NA75-43-481 | 1 | HOSE,VACUUM | | | |
| 43-504<br>W023-43-504 | 1 | JOINT,PIPE | | | |
| 43-505<br>W023-43-505 | 1 | BOLT,CONNECTOR | | | |
| 43-540A<br>GA97-43-540 | 1 | SENSOR,RESERVE TANK | | | |
| 43-542<br>3527-43-542 | 1 | FLOAT | | | |
| 43-55X<br>NAY3-43-55X | 1 | SET,TANK | | | |
| 43-552S<br>D001-49-650A | 1 | CAP SET,RESERVE TANK | | | |
| 43-63F<br>B252-49-512 | 1 | RING,'O' | | | |
| 43-640<br>NA01-43-640 | 1 | HOSE,VACUUM | | | |
| 43-750A<br>NA02-43-750A | 1 | HOLDER,P.B.VALVE | | | |
| 43-800 | | VACUUM POWER ASSIST | | | |

(5901-)

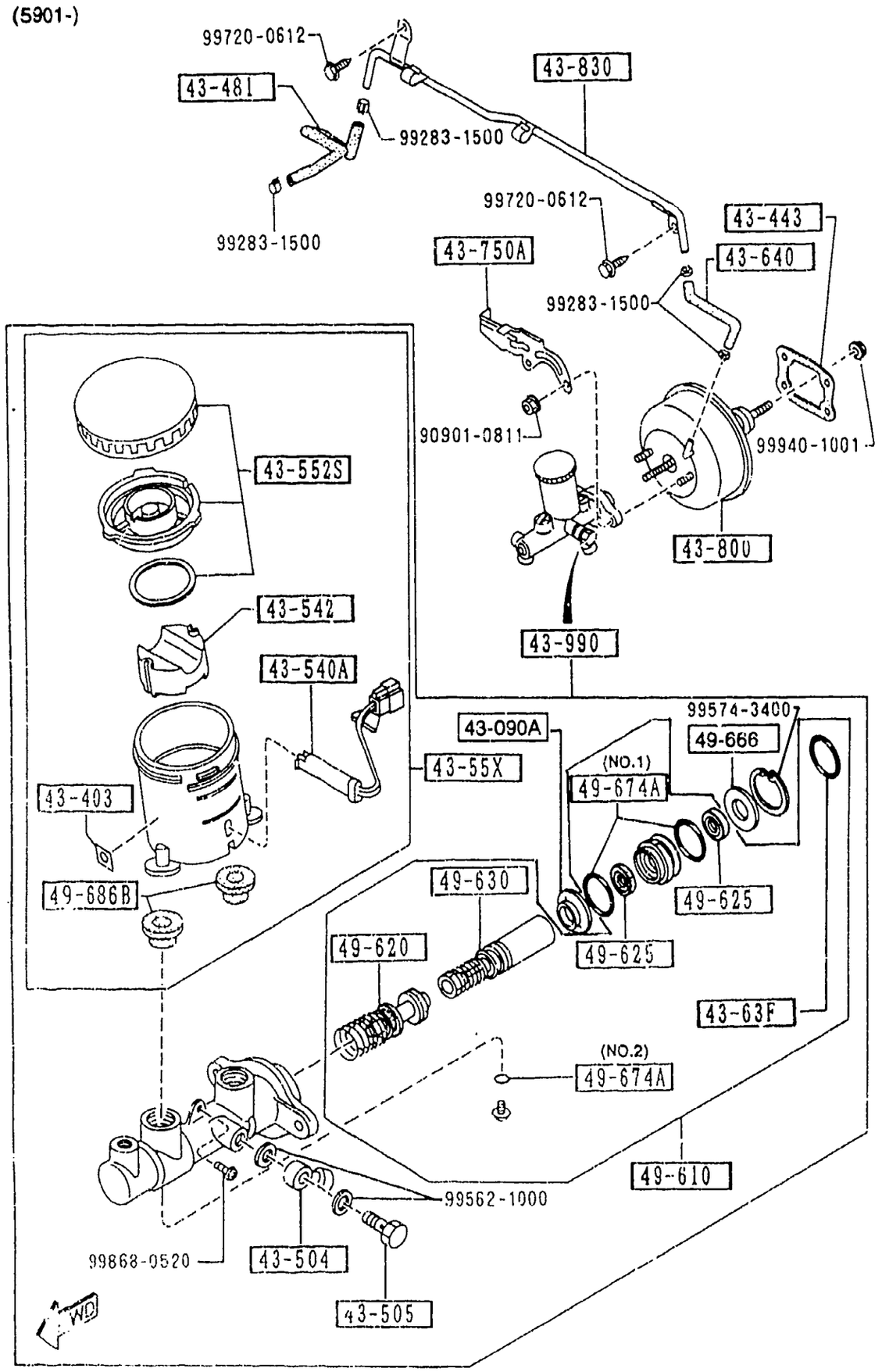


AUNA05

4340 A-2 * BRAKE MASTER CYLINDER & POWER BRAKE (W/ANTILOCK BRAKE)

| PART NO. | QTY | MODEL/RESTRICTION | MODEL/RESTRICTION | MODEL/RESTRICTION | FROM-TO |
|---|---|---|---|---|---|
| CONT'D | | | | | |
| NA80-43-800 | 1 | | | | |
| 43-830 | | PIPE,VACUUM | | | |
| NA23-43-830B | 1 | | | | |
| 43-990 | | CYL.,TANDEM MASTER | | | |
| NA23-43-40Z | 1 | | | | -6116 |
| A (NA23-43-40ZA) | | | | | |
| *NA23-43-40ZA | 1 | | | | 6116- |
| 49-610 | | PARTS KIT,INN.-BRAKE | | | |
| NAY3-43-41Z | 1 | | | | -5901 |
| NAY3-43-41ZA | 1 | | | | 5901-6116 |
| *D1Y2-43-41Z | 1 | | | | 6116- |
| 49-620 | | PISTON,PRIMARY | | | |
| B252-49-620A | 1 | | | | |
| 49-625 | | CUP,SECONDARY | | | |
| NA23-43-625 | 2 | | | | |
| 49-630 | | PISTON,FLOATING | | | |
| NA23-43-63Z | 1 | | | | |
| 49-666 | | WASHER,STOP | | | |
| B252-49-666 | 1 | | | | |
| 49-674A | | RING,'O'-MASTER CYL. | | | |
| NA23-43-515 | 2 | SHINEI KOGYO (ILLUST. NO.1) | | | |
| 99541-00603 | 1 | NOK (ILLUST. NO.2) | | | |
| 49-686B | | BUSH,ELBOW JOINT | | | |
| F100-49-686 | 2 | | | | |

5901 NA3** -702989
6116 NA3** -709695

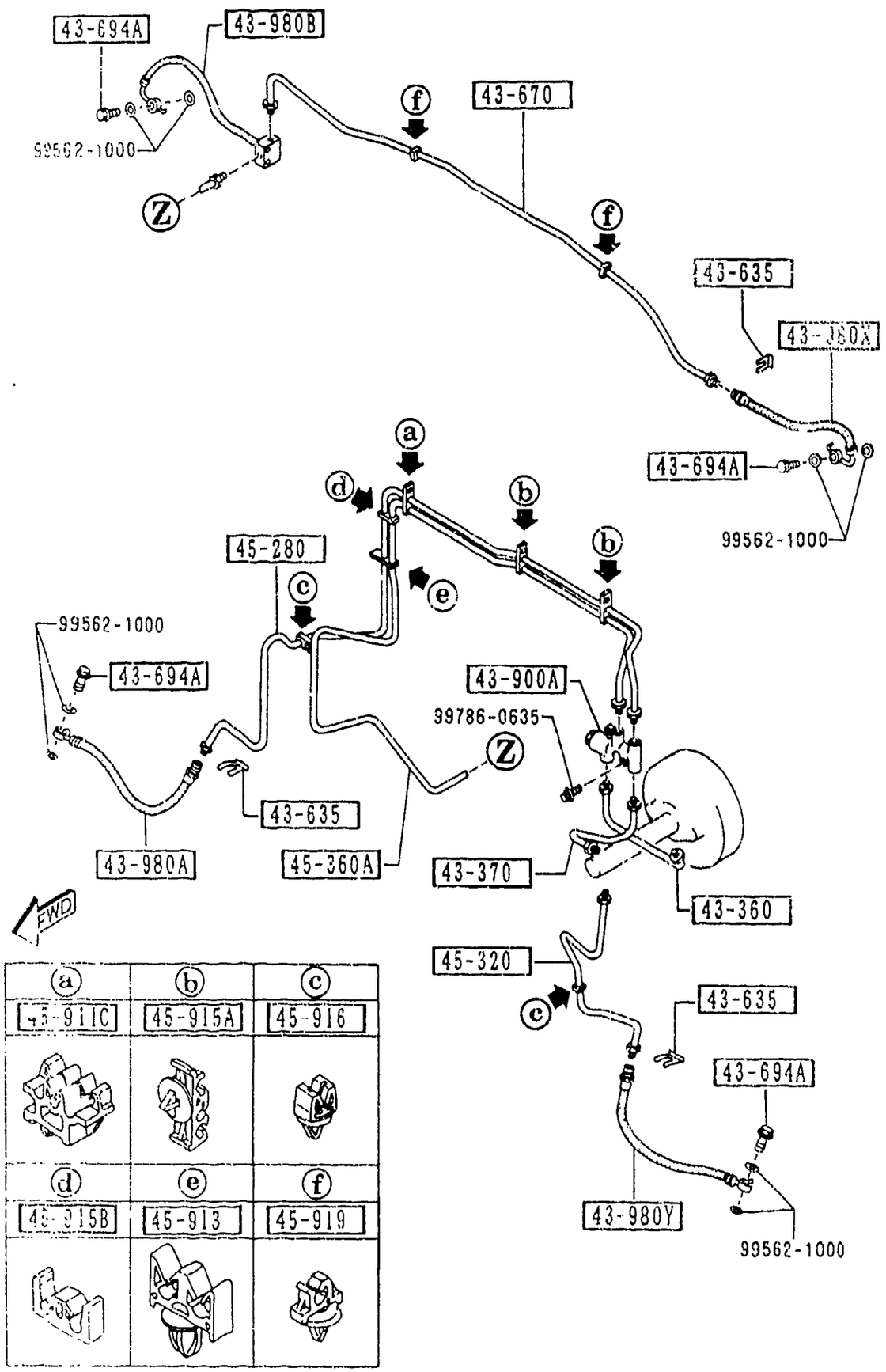




| PART NO. | QTY | MODEL/RESTRICTION | MODEL/RESTRICTION | MODEL/RESTRICTION | FROM-TO |
|---|---|---|---|---|---|
| 43-360 | | PIPE,BRAKE | | | |
| NA01-43-360A | 1 | | | | |
| 43-370 | | PIPE,BRAKE | | | |
| NA01-43-370 | 1 | | | | |
| 43-635 | | CLIP,FLEXIBLE HOSE | | | |
| W023-43-635 A (W023-43-635A) | 3 | | | | -4927 |
| W023-43-635A | 3 | | | | 4927- |
| 43-670 | | PIPE,BRAKE-REAR | | | |
| NA01-43-670A | 1 | | | | |
| 43-694A | | BOLT,CONNECTOR | | | |
| B001-43-694A | 4 | | | | |
| 43-900A | | VALVE,P.B. | | | |
| H380-43-900 | 1 | | | | |
| 43-980A | | HOSE(R),FLEXIBLE-FRT | | | |
| NA75-43-810 | 1 | | | | |
| 43-980B | | HOSE(R),FLEXIBLE-RR | | | |
| NA75-43-980 | 1 | | | | |
| 43-980X | | HOSE(L),FLEXIBLE-RR | | | |
| NA75-43-990 | 1 | | | | |
| 43-980Y | | HOSE(L),FLEXIBLE-FRT | | | |
| NA75-43-820 | 1 | | | | |
| 45-280 | | PIPE(R),BRAKE-FRONT | | | |
| NA75-45-280 | 1 | | | | |
| 45-320 | | PIPE(L),BRAKE-FRONT | | | |
| NA01-45-320C | 1 | | | | -4A03 |
| NA01-45-320D | 1 | | | | 4A03- |
| 45-360A | | PIPE,BRAKE-REAR | | | |
| NA75-45-360A | 1 | | | | |

4927 NA35* -603489
4A03 NA35* -603621

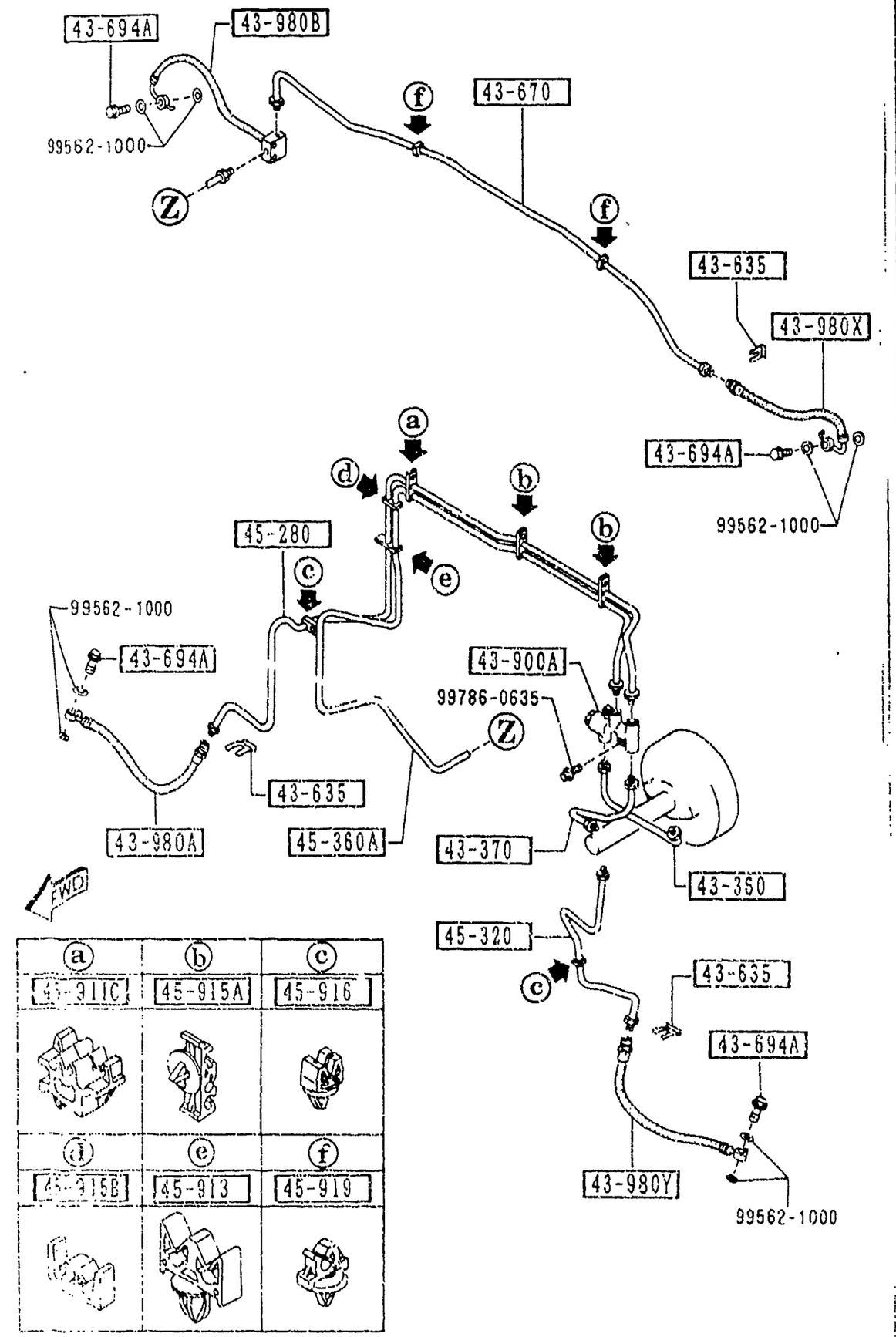


4360 -2 >: BRAKE PIPINGS
(W/O ANTI LOCK BRAKE SYSTEM)

| PART NO. | QTY | MODEL/RESTRICTION | MODEL/RESTRICTION | MODEL/RESTRICTION | FROM-TO |
|---|---|---|---|---|---|
| 45-911C<br>NA01-45-911 | 1 | CLIP,PIPE | | | |
| 45-913<br>NA75-45-913 | 1 | HOLDER,PIPE | | | |
| 45-915A<br>B001-45-915 | 2 | HOLDER,PIPE | | | |
| 45-915B<br>NA01-45-915A | 1 | HOLDER,PIPE | | | |
| 45-916<br>BC1D-45-916 | 2 | HOLDER,PIPE | | | |
| 45-919<br>B001-45-919B | 2 | CLIP,PIPE | | | |

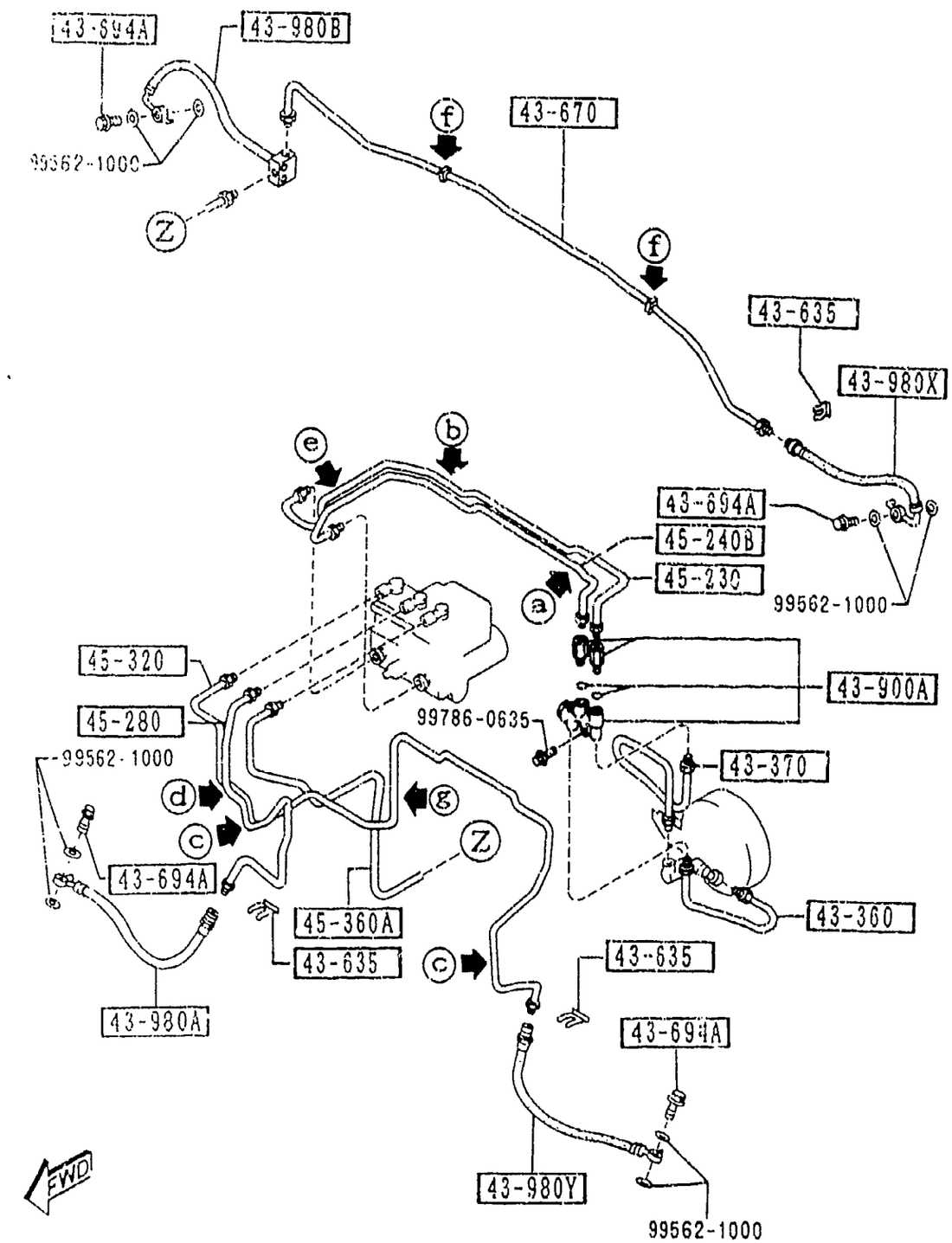


| a | b | c | d | e | f | g |
|---|---|---|---|---|---|---|
| 45-910E | 45-920 | 45-916 | 43-919A | 45-916A | 45-919 | 45-919C |
| 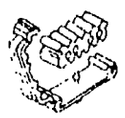 | 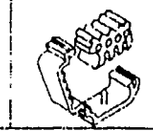 | | 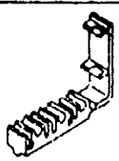 | | | |





| PART NO. | QTY | MODEL/RESTRICTION | MODEL/RESTRICTION | MODEL/RESTRICTION | FROM-TO |
|---|---|---|---|---|---|
| 43-360 | | PIPE,BRAKE | | | |
| NA23-43-360A | 1 | | | | |
| 43-370 | | PIPE,BRAKE | | | |
| NA23-43-370A | 1 | | | | |
| 43-635 | | CLIP,FLEXIBLE HOSE | | | |
| W023-43-635 | 3 | | | | -4927 |
| A (W023-43-635A) | | | | | |
| W023-43-635A | 3 | | | | 4927- |
| 43-670 | | PIPE,BRAKE-REAR | | | |
| NA01-43-670A | 1 | | | | |
| 43-694A | | BOLT,CONNECTOR | | | |
| B001-43-694A | 4 | | | | |
| 43-900A | | VALVE,P.B. | | | |
| F123-43-900 | 1 | | | | |
| 43-919A | | HOLDER,BRAKE PIPE | | | |
| NA20-45-915 | 1 | | | | |
| 43-980A | | HOSE(R),FLEXIBLE-FRT | | | |
| NA75-43-810 | 1 | | | | |
| 43-980B | | HOSE(R),FLEXIBLE-RR | | | |
| NA75-43-980 | 1 | | | | |
| 43-980X | | HOSE(L),FLEXIBLE-RR | | | |
| NA75-43-990 | 1 | | | | |
| 43-980Y | | HOSE(L),FLEXIBLE-FRT | | | |
| NA75-43-820 | 1 | | | | |
| 45-230 | | PIPE NO.3,MAIN BRAKE | | | |
| NB13-45-230A | 1 | | | | |
| 45-240B | | PIPE,BRAKE-FRT | | | |
| NB13-45-240A | 1 | | | | |

4927 NA35* -603489

## 4360 A BRAKE PIPINGS (ANTI LOCK BRAKE SYSTEM)

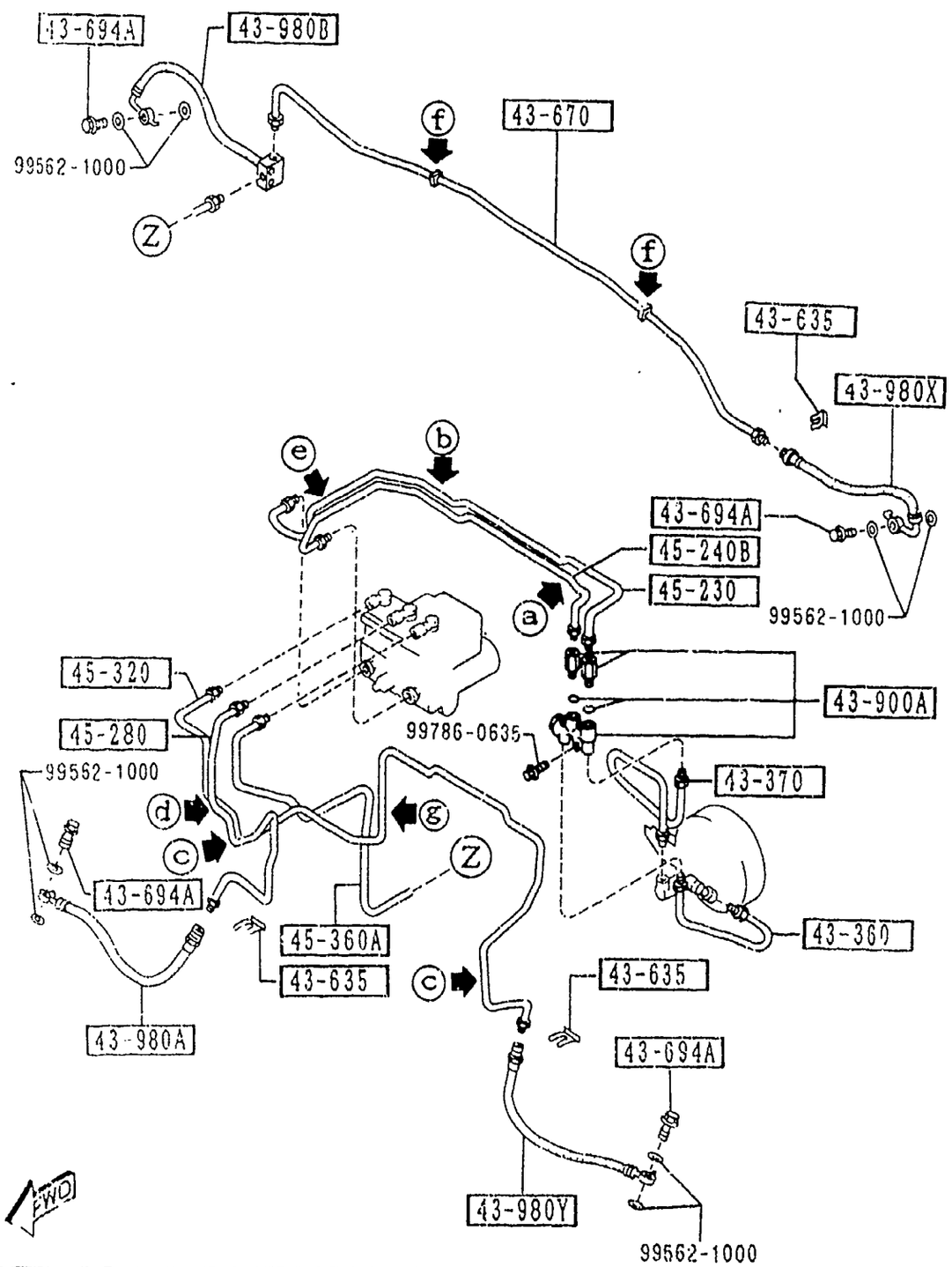


| a | b | c | d | e | f | g |
|---|---|---|---|---|---|---|
| 15-910E | 45-920 | 45-916 | 43-919A | 45-916A | 45-919 | 45-919C |
| 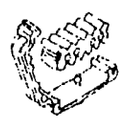 | 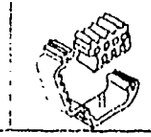 | | 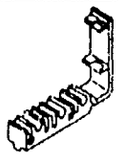 | | | |

## 4360 A-2 * BRAKE PIPINGS (ANTI LOCK BRAKE SYSTEM)

| PART NO. | QTY | MODEL/RESTRICTION | MODEL/RESTRICTION | MODEL/RESTRICTION | FROM-TO |
|---|---|---|---|---|---|
| 45-280<br>NB13-45-280 | 1 | PIPE(R),BRAKE-FRONT | | | |
| 45-320<br>NB13-45-320A | 1 | PIPE(L),BRAKE-FRONT | | | |
| 45-360A<br>NB13-45-360B | 1 | PIPE,BRAKE-REAR | | | |
| 45-910E<br>NA20-45-910A | 1 | HOLDER,PIPE | | | |
| 45-916<br>BC.D-45-916 | 2 | HOLDER,PIPE | | | |
| 45-916A<br>HG31-45-915 | 1 | HOLDER,PIPE | | | |
| 45-919<br>B001-45-919B | 2 | CLIP,PIPE | | | |
| 45-919C<br>G030-45-919A | 1 | CLIP,PIPE | | | |
| 45-920<br>NA20-45-920B | 1 | BRACKET | | | |