Parts Catalog

Mazda MX-5 MIATA U.S.A. ('97)

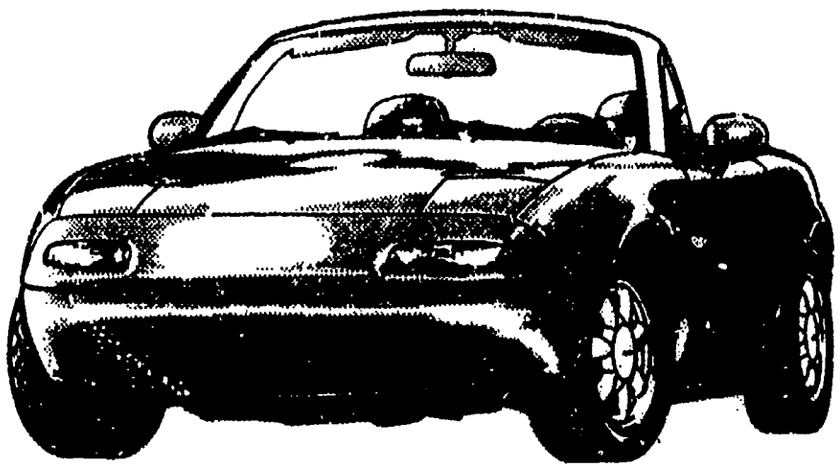

NA35 • -700001~800000

Jul.'98 (FINAL)

Catalog No. AU-NA06-03

mazda

© 1998 Mazda Motor Corporation

LAYOUT OF CONTENTS / DISPOSITION TYPOGRAPHIQUE DE CONTENU / DISPOSICION DEL CONTENIDO / ANORDNUNG DES INHALTS

- The following is a typical example of the layout of contents on Mazda microfiche parts catalog.
- Voici un exemple typique de la disposition typographique de contenu dans les microfiches de catalogue des pièces de Mazda.
- El siguiente es un ejemplo típico de la disposición del contenido en una microficha del catálogo de repuestos de Mazda.
- Folgendes ist ein typisches Beispiel der Inhaltsanordnung des Mazda-Mikrofiche-Teilekatalogs.

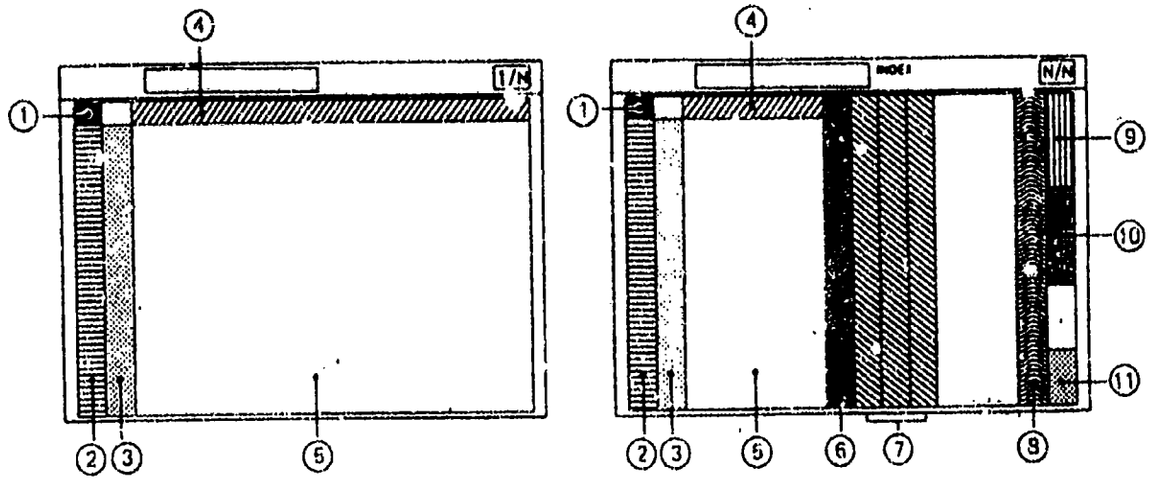

Remark : The items listed under ④ have been deleted from each fiche since Dec. '93

① • Layout of contents
• Disposition Typographique de Contenu
• Disposición del contenido
• Anordnung des Inhalts

② • Pictorial Index
• Index par Schémas
• Indice Gráfico
• Illustrierter Index

③ • Master Section No. Index
• Index des Numéros des Sections Totale
• Indice del Número de la Sección Maéstra
• Hauptabschnittsnummer-Index

~~④ • Section No. Index for the Column~~
~~• Index des Numéros des Sections pour les Colonnes~~
~~• N° de la Sección para el Indice~~
~~• Abschnittsnummer-Index für die Spalte~~

⑤ • Illustration & Text
• Illustrations et Textes
• Ilustración y Texto
• Abbildung und Text

⑥ • Part No. Index
• Index des Numéros des Pièces
• Indice del N° de Pieza
• Teile-Nr.-Index

⑦ • Alphabetical Index
• Index Alphabétique
• Indice Alfabético
• Alphabetischer Index

⑧ • Model Identification
• Identification des Modèles
• Identificación del Modelo
• Modell-Kennzeichnung

⑨ • Vehicle Identification System
• Système d'Identification de Véhicule
• Sistema de Identification de Vehículo
• Fahrzeug-Identifikations-system

PICTORIAL INDEX

GASOLINE ENGINE 4 - CYLINDER (1/2)

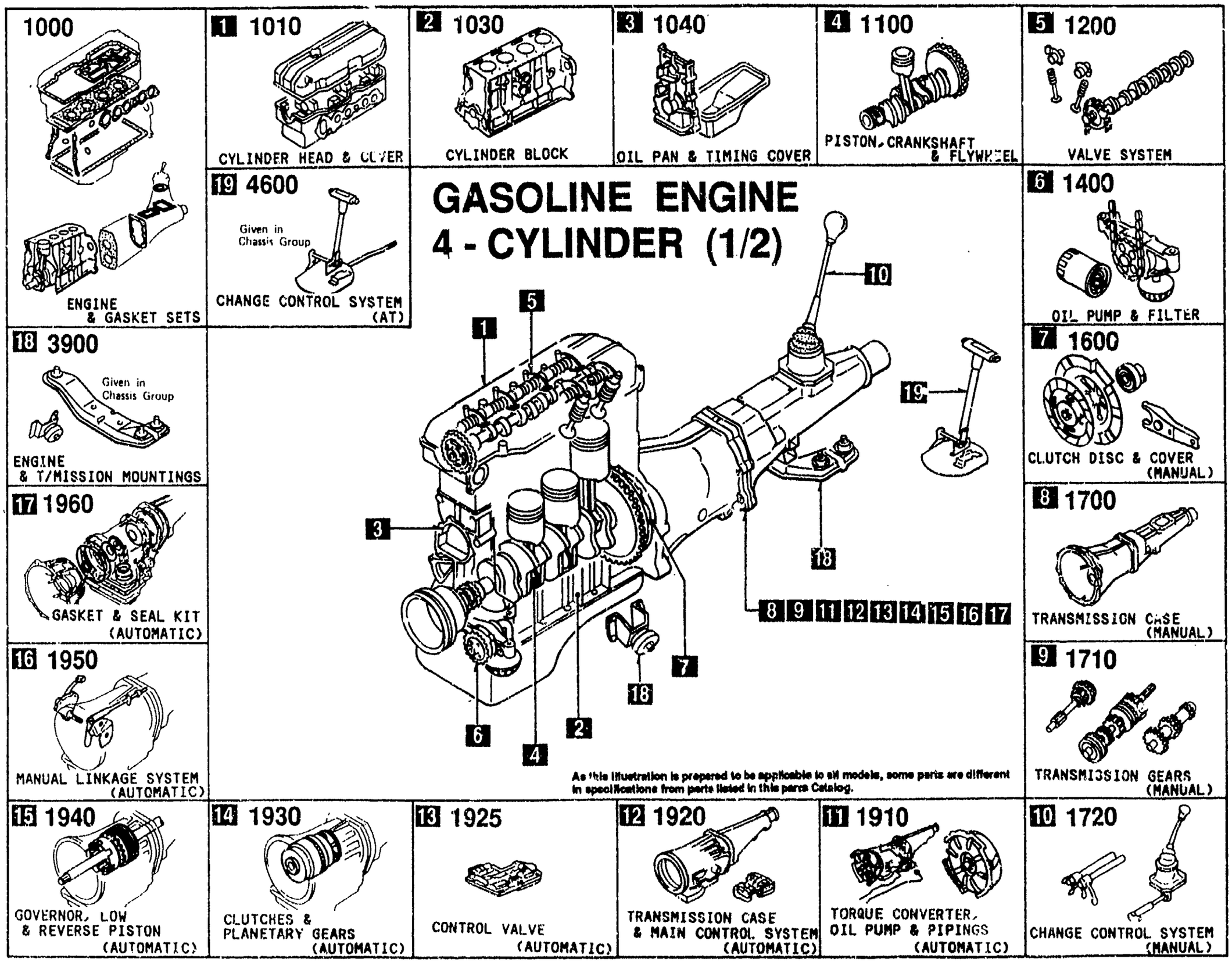

As this illustration is prepared to be applicable to all models, some parts are different in specifications from parts listed in this parts Catalog.

PICTORIAL INDEX

1 1300

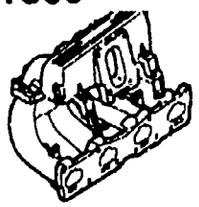

INLET MANIFOLD

2 1310

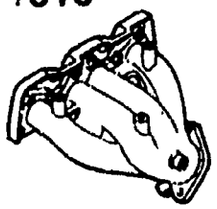

EXHAUST MANIFOLD

3 1320

FUEL SYSTEM

4 1325

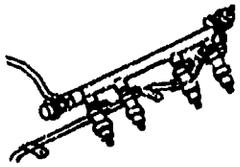

FUEL DISTRIBUTOR

5 1330

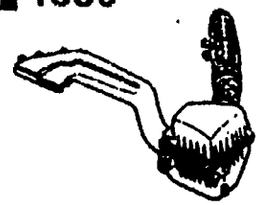

AIR CLEANER

6 1364

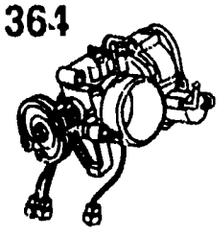

THROTTLE BODY

GASOLINE ENGINE
4 - CYLINDER (2/2)

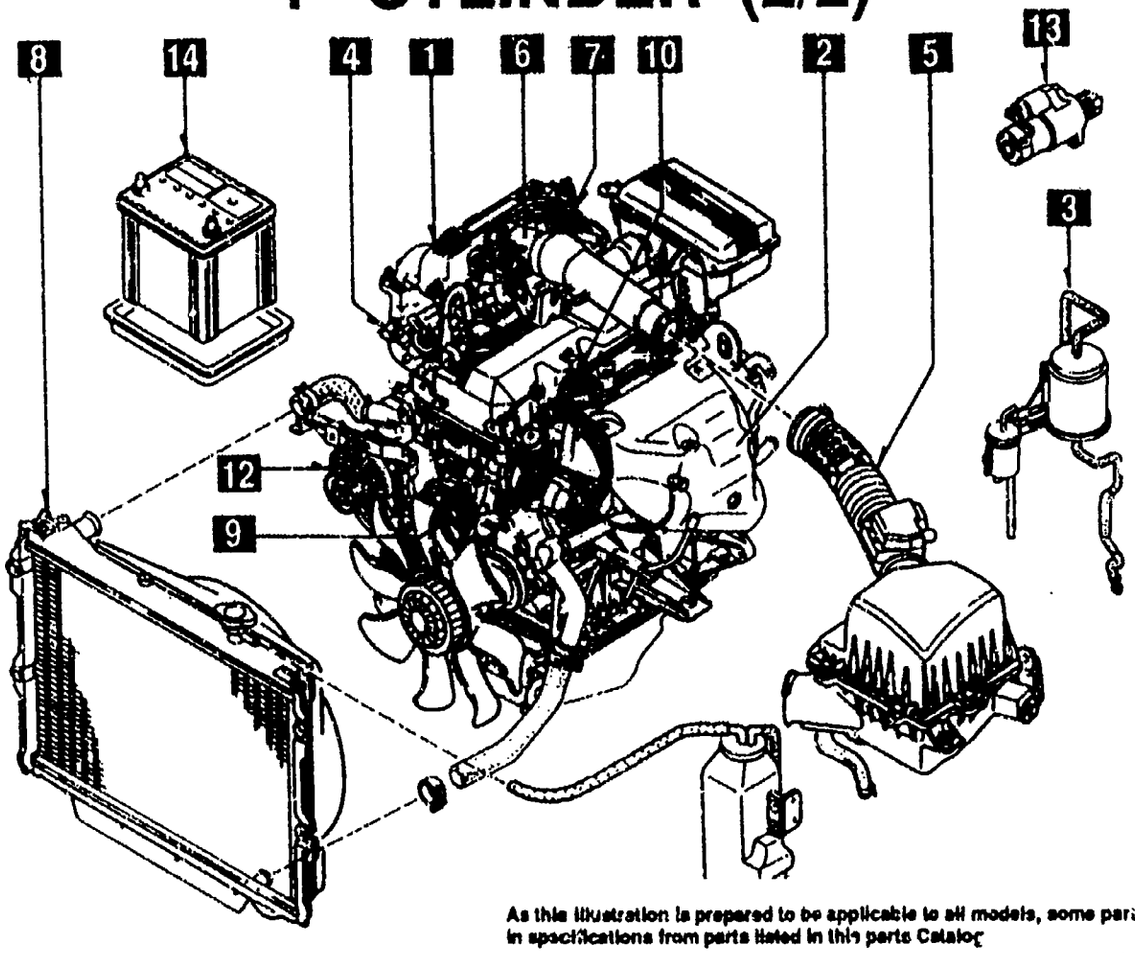

As this illustration is prepared to be applicable to all models, some parts are different in specifications from parts listed in this parts Catalog

7 1370

EMISSION CONTROL SYSTEM (INLET SIDE)

8 1500

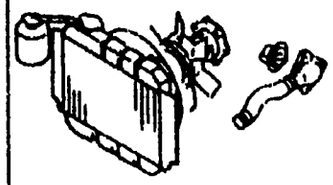

COOLING SYSTEM

9 1580

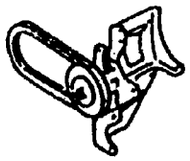

BRACKET, PULLEY & BELT

10 1800

ENGINE ELECTRICAL SYSTEM

11

14 1850

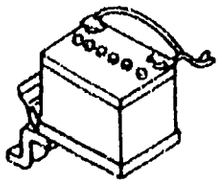

BATTERY

13 1840

STARTER

12 1830

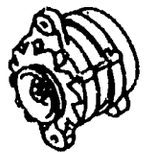

ALTERNATOR

PICTORIAL INDEX

1 2505

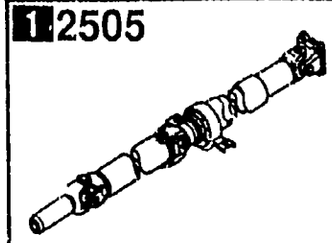

REAR PROPELLER SHAFT

2 2550

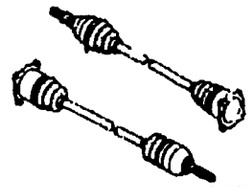

REAR DRIVE SHAFT

3 2600

REAR AXLE

4 2610

REAR BRAKE MECHANISMS

5 2710

REAR DIFFERENTIALS

6 2800

REAR SUSPENSION MECHANISMS

20 4000

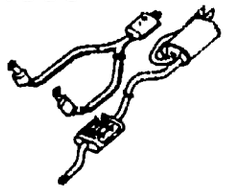

EXHAUST SYSTEM

21 4600

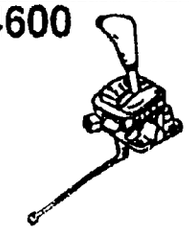

CHANGE CONTROL SYSTEM

22 1720

Given in Engine Group

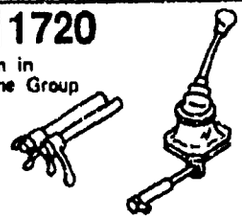

CHANGE CONTROL SYSTEM (MANUAL TRANSMISSION)

CHASSIS (1/2)

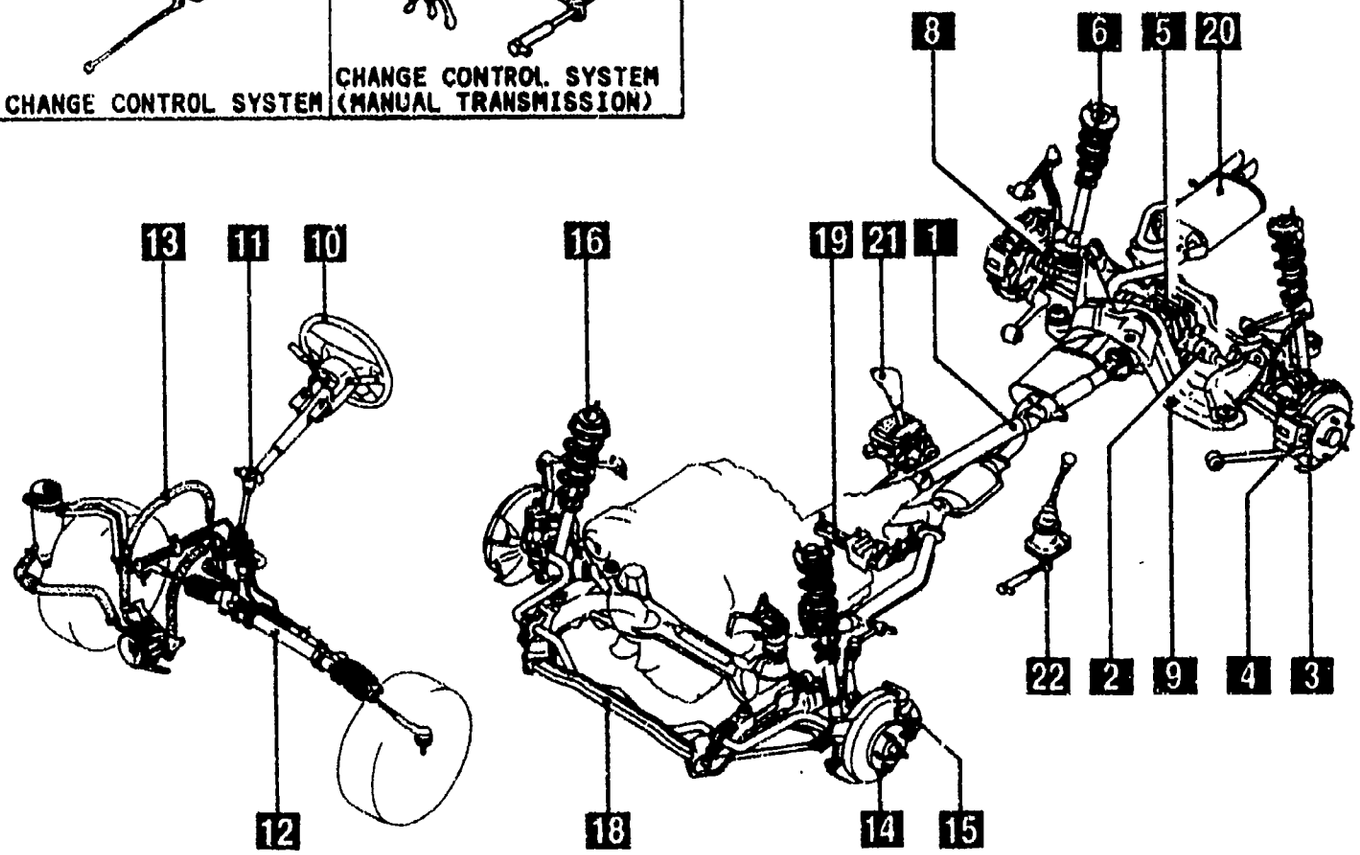

As this illustration is prepared to be applicable to all models, some parts are different in specifications from parts listed in this parts Catalog.

7

8 2810

REAR STABILIZER

9 2830

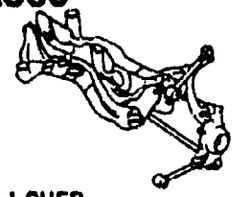

REAR LOWER ARMS & SUB FRAME

10 3200

STEERING WHEEL

11 3210

STEERING COLUMN & SHAFTS

12 3220

STEERING GEAR

13 3240

POWER STEERING SYSTEM (FRONT)

14 3300

FRONT AXLE

15 3310

FRONT BRAKE MECHANISMS

16 3400

FRONT SUSPENSION MECHANISMS

17

18 3410

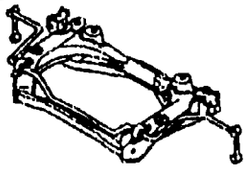

CROSSMEMBER & STABILIZER

19 3900

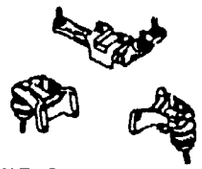

ENGINE & T/MISSION MOUNTINGS

PICTORIAL INDEX

1 3700

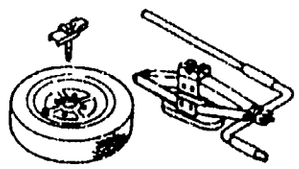

TIRES & JACK

2 4140

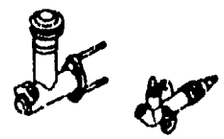

CLUTCH RELEASE & MASTER CYLINDERS

3 4145

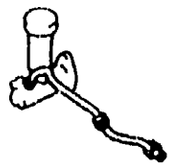

CLUTCH PIPINGS

4 4160

ACCELERATOR CONTROL SYSTEM

5 4200

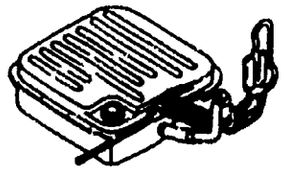

FUEL TANK

6 4210

FUEL LID OPENER

CHASSIS (2/2)

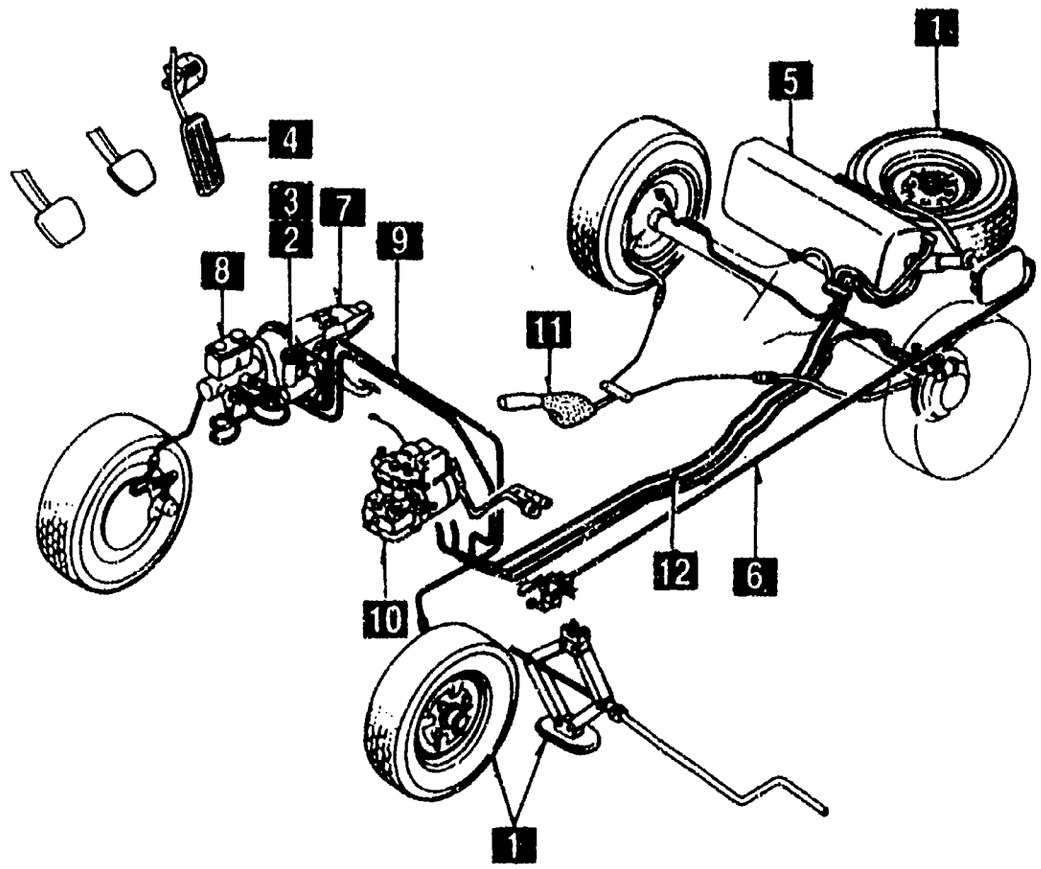

As this illustration is prepared to be applicable to all models, some parts are different in specifications from parts listed in this parts Catalog.

7 4300

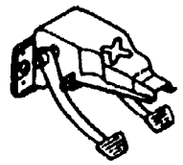

CLUTCH & BRAKE PEDALS

8 4340

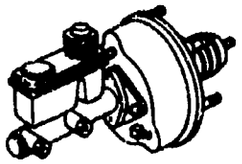

BRAKE MASTER CYLINDER & POWER BRAKE

9 4360

BRAKE PIPINGS

10 4370

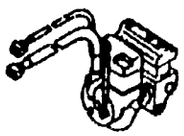

ANTILOCK BRAKE SYSTEM

12 4500

FUEL PIPINGS

11 4400

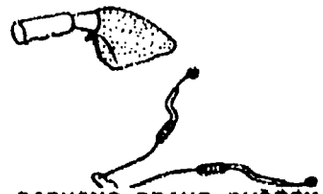

PARKING BRAKE SYSTEM

PICTORIAL INDEX

1 0900

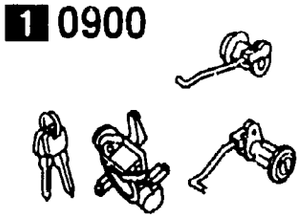

KEY SETS

2 5100

HEAD LAMPS

3 5103

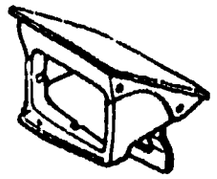

HEAD LAMP RETRACTORS

4 5105

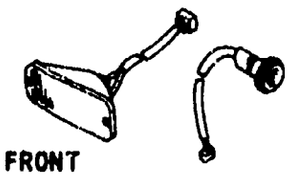

FRONT COMBINATION LAMPS

5 5110

REAR COMBINATION LAMPS

6 5120

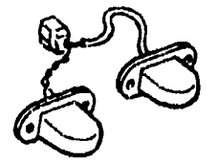

LICENSE LAMPS

20 6640

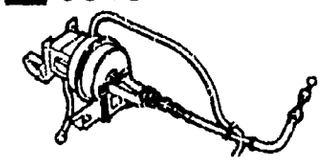

AUTO CRUISE CONTROL SYSTEM

19

18 6740

WIPER MOTOR COMPONENTS (FRONT)

17 6730

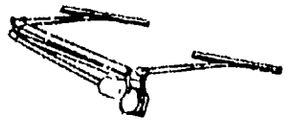

WINDSHIELD WIPERS

BODY (1/4)

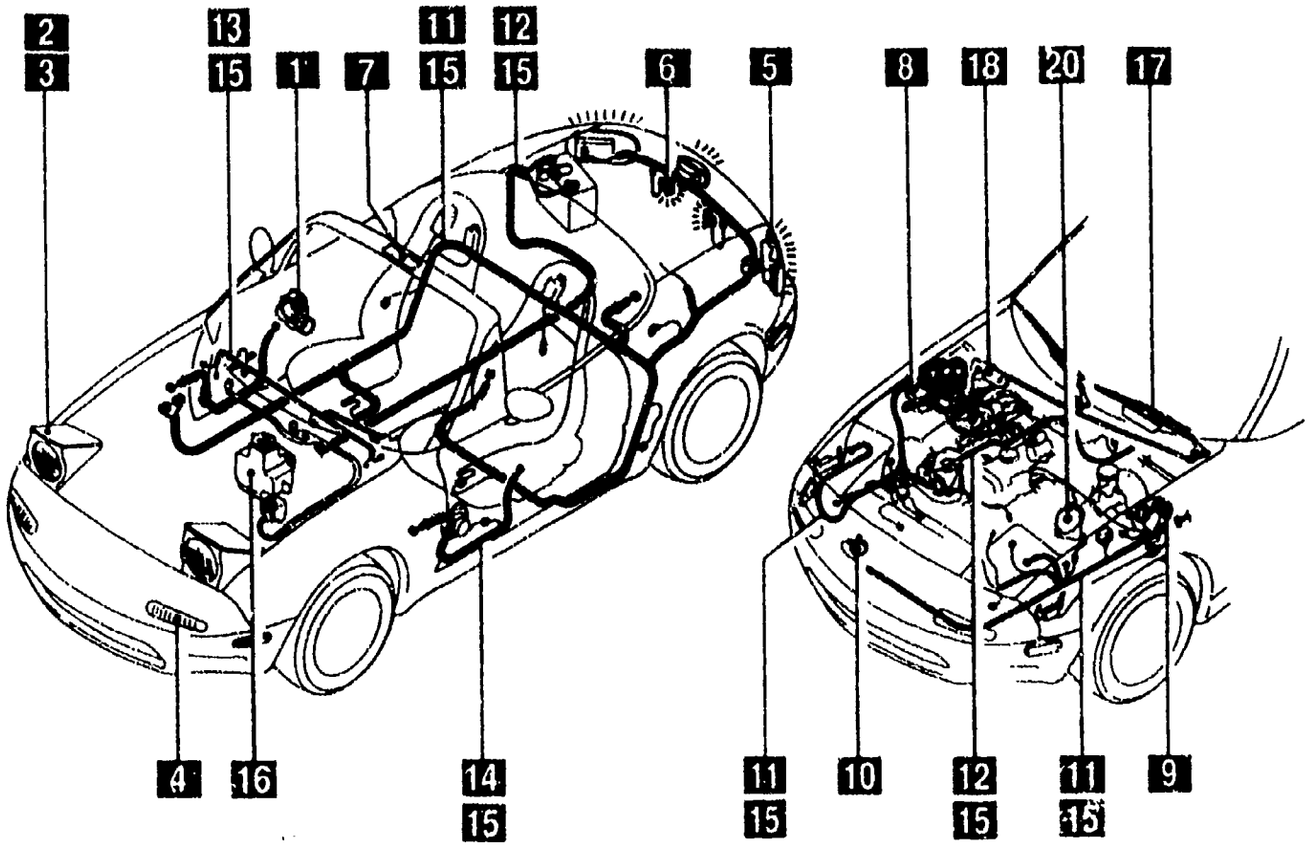

As this illustration is prepared to be applicable to all models, some parts are different in specifications from parts listed in this parts Catalog.

7 5125

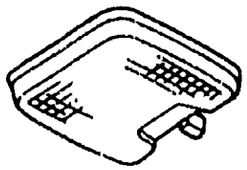

INTERIOR LAMPS

8 6600

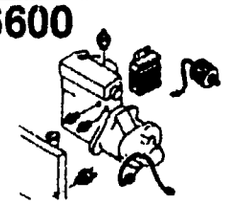

SWITCHES & RELAYS (ENGINE)

9 6630

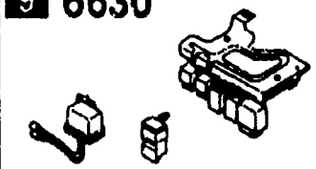

RELAYS & UNIT (BODY)

10 6635

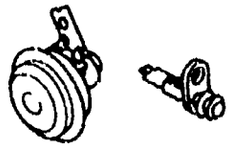

DOOR SWITCH & HORNS

16 6720

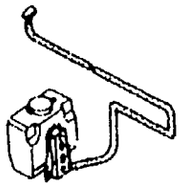

WINDSHIELD WASHER

15 6704

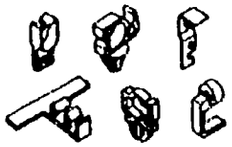

WIRING HARNESS CLAMPS

14 6703

WIRING HARNESSES (DOOR, FLOOR/CEILING)

13 6702

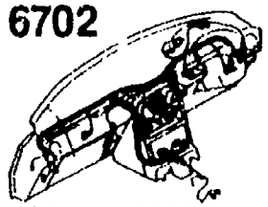

WIRING HARNESSES (DASHBOARD)

12 6701

WIRING HARNESSES (ENGINE & T/MISSION)

11 6700

WIRING HARNESSES (FRONT & REAR)

PICTORIAL INDEX

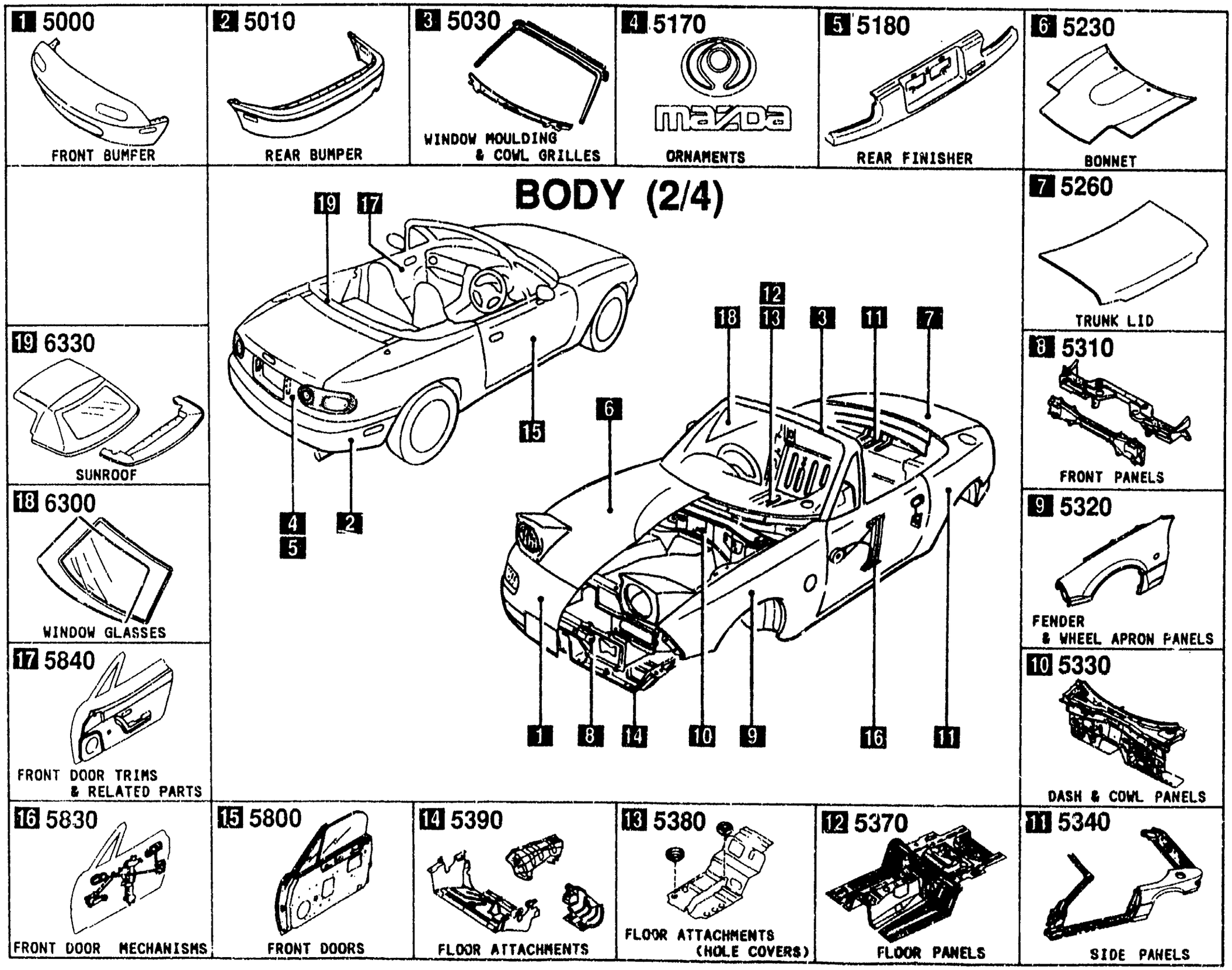

PICTORIAL INDEX

1 5500

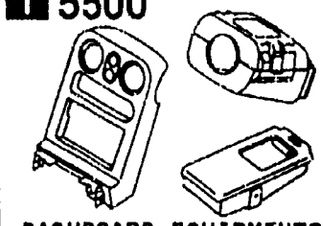

DASHBOARD EQUIPMENTS

2 5520

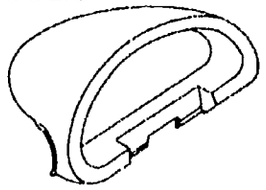

METER HOOD

3 5530

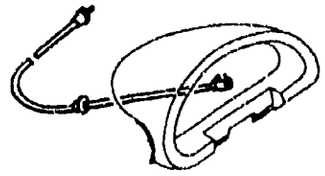

SPEEDOMETER CABLE

4 5540

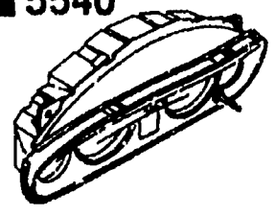

METER COMPONENTS

5 5560

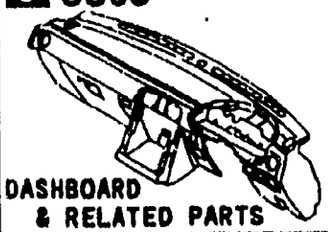

DASHBOARD & RELATED PARTS

6 5570

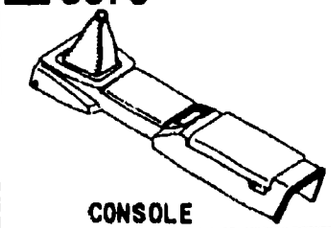

CONSOLE

BODY (3/4)

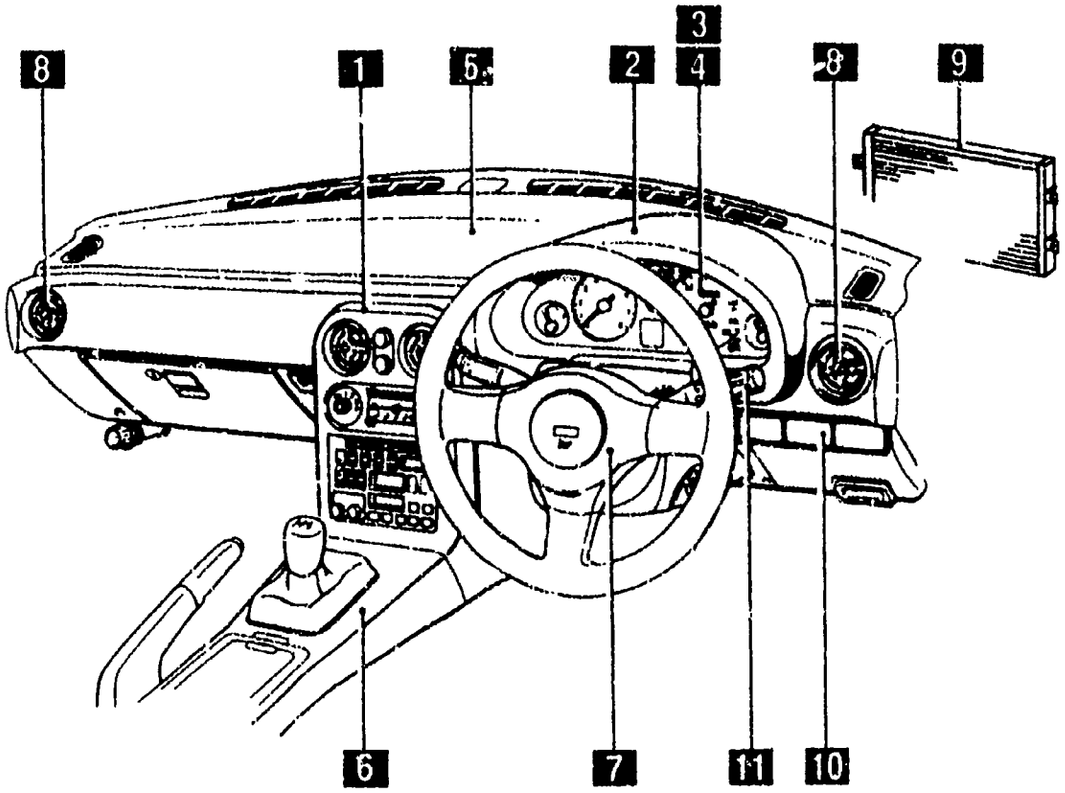

As this illustration is prepared to be applicable to all models, some parts are different in specifications from parts listed in this parts Catalog.

7 5795

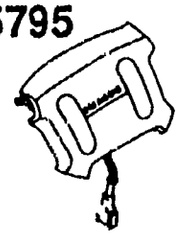

AIR BAG

8

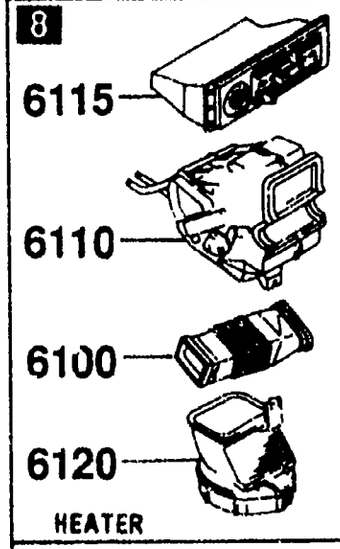

HEATER

9

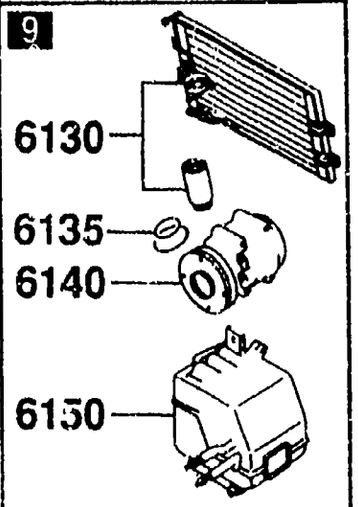

AIR CONDITIONER

11 6611

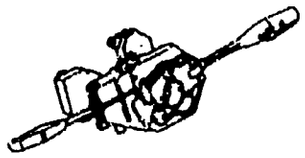

COMBINATION SWITCH

10 6610

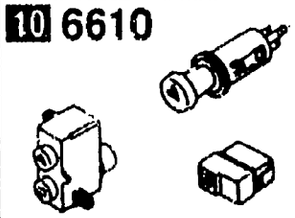

DASHBOARD SWITCHES

PICTORIAL INDEX

1 5580

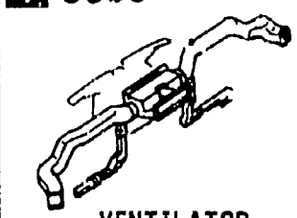

VENTILATOR

2 5700

SEATS

3 5790

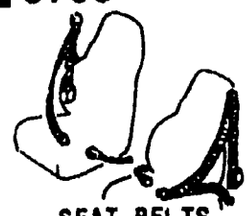

SEAT BELTS

4 6680

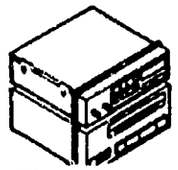

AUDIO SYSTEMS (RADIO & TAPE DECK)

5 6682

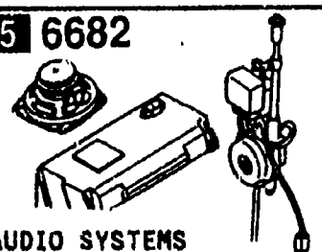

AUDIO SYSTEMS (ANTENNA & SPEAKER)

6 6820

FRONT HEADER TRIM & PILLAR TRIMS

BODY (4/4)

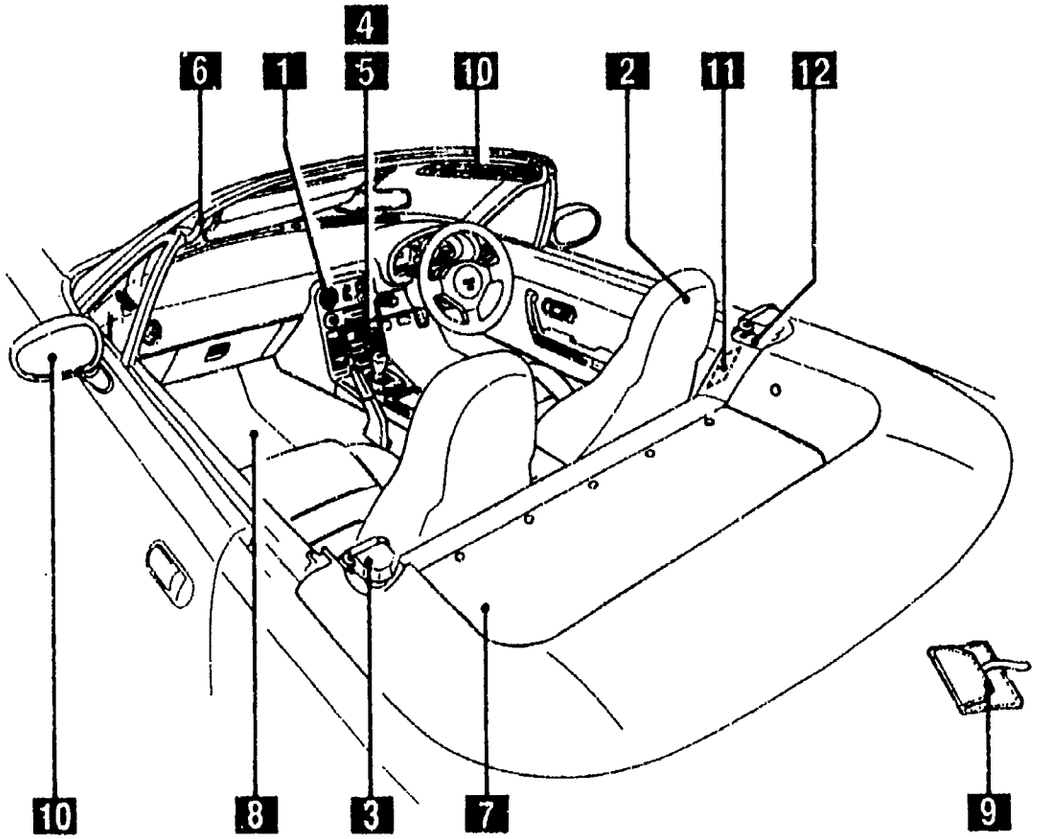

As this illustration is prepared to be applicable to all models, some parts are different in specifications from parts listed in this parts Catalog.

7 6840

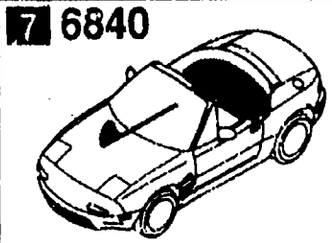

TRIMS & SCUFF PLATES

8 6860

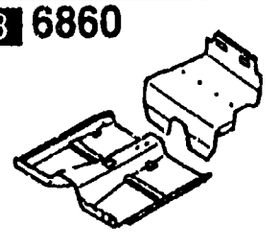

FLOOR MATS & PADS

9 6870

SERVICE TOOLS

10 6900

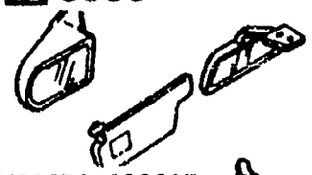

VISORS, ASSIST HANDLES & MIRRORS

11 6930

CAUTION PLATES & LABELS

12 7250

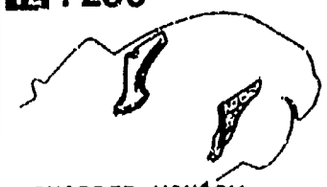

QUARTER WINDOW & TRIMS

SECTION NAME INDEX (BODY)

LO.NO	SEC.NO	SECTION NAME	LO.NO	SEC.NO	SECTION NAME	LO.NO	SEC.NO	SECTION NAME
2-C10	0900	KEY SETS	3-C04	6100	HEATER	3-L09	6900	SUN VISORS, ASSIST HANDLES & MIRRORS
2-E10	5000	FRONT BUMPER	3-D04	6110	HEATER UNIT COMPONENTS	3-C10	6930	CAUTION PLATES & LABELS
2-H10	5010	REAR BUMPER	3-E04	6115	HEATER CONTROL COMPONENTS	3-E10	7250	QUARTER WINDOW & TRIMS
2-J10	5030	WINDOW MOULDING & COWL GRILLES	3-F04	6120	HEATER BLOWER COMPONENTS			
2-K10	5100	HEAD LAMPS	3-G04	6130	AIR CONDITIONER			
2-L10	5103	HEAD LAMP RETRACTORS	3-L04	6135	AIR CONDITIONING COOLING PIPE O-RING			
2-C11	5105	FRONT COMBINATION LAMPS	3-M04	6140	AIR CONDITIONING COMPRESSOR COMPONENTS			
2-E11	5110	REAR COMBINATION LAMPS						
2-I11	5120	LICENSE LAMPS	3-C05	6150	AIR CONDITIONING COOLING UNIT			
2-J11	5125	INTERIOR LAMPS	3-D05	6300	WINDOW GLASSES			
2-K11	5170	ORNAMENTS	3-E05	6330	SUN ROOF			
2-L11	5180	REAR FINISHER	3-F06	6600	ENGINE SWITCHES & RELAYS			
2-M11	5230	BONNET	3-K06	6610	DASHBOARD SWITCHES			
2-C12	5260	TRUNK LID	3-M06	6611	COMBINATION SWITCH			
2-D12	5310	FRONT PANELS	3-N06	6630	BODY RELAYS & UNIT			
2-E12	5320	FENDER & WHEEL APRON PANELS	3-D07	6635	DOOR SWITCH & HORNS			
2-H12	5330	DASH & COWL PANELS	3-E07	6640	AUTO CRUISE CONTROL SYSTEM			
2-I12	5340	SIDE PANELS	3-F07	6680	AUDIO SYSTEMS (RADIO & TAPE DECK)			
2-C13	5370	FLOOR PANELS	3-I07	6682	AUDIO SYSTEMS (ANTENNA & SPEAKER)			
2-F13	5380	FLOOR ATTACHMENTS (HOLE COVERS)	3-L07	670[illegible]	FRONT & REAR WIRING HARNESSES			
2-H13	5390	FLOOR ATTACHMENTS	3-C08	6701	ENGINE & TRANSMISSION WIRING HARNESSES			
2-C14	5500	DASHBOARD EQUIPMENTS						
2-E14	5520	METER HOOD	3-E08	6702	DASHBOARD WIRING HARNESSES			
2-F14	5530	SPEEDOMETER CABLE	3-F08	6703	DOOR, FLOOR & CEILING WIRING HARNESSES			
2-G14	5540	METER COMPONENTS	3-G08	6704	WIRING HARNESS CLAMPS			
2-I14	5560	DASHBOARD & RELATED PARTS	3-J08	6720	WINDSHIELD WASHER (W/O ANTI LOCK BRAKE)			
2-L14	5570	CONSOLE						
2-D15	5580	VENTILATOR	3-L08	6720 A	WINDSHIELD WASHER (W/ANTI LOCK BRAKE)			
2-F15	5700	SEATS	3-C09	6730	WINDSHIELD WIPERS			
2-H16	5790	SEAT BELTS	3-E09	6740	WIPER MOTOR COMPONRNTS			
2-I16	5795	AIR BAG	3-F09	6820	FRONT HEADER TRIM & PILLAR TRIMS			
2-J16	5800	FRONT DOORS						
3-C03	5830	FRONT DOOR MECHANISMS	3-G09	6840	TRIMS & SCUFF PLATES			
3-G03	5840	FRONT DOOR TRIMS & RELATED PARTS	3-I09	6860	FLOOR MATS & PADS			
			3-K09	6870	SERVICE TOOLS			

SECTION NAME INDEX (ENGINE)

LO.NO	SEC.NO	SECTION NAME	LO.NO	SEC.NO	SECTION NAME	LO.NO	SEC.NO	SECTION NAME
1-C03	1000	ENGINE & GASKET SETS	1-N09	1950	AUTOMATIC TRANSMISSION MANUAL LINKAGE SYSTEM			
1-E03	1010	CYLINDER HEAD & COVER	1-D10	1960	AUTOMATIC TRANSMISSION GASKET & SEAL KIT			
1-G03	1030	CYLINDER BLOCK						
1-H03	1040	OIL PAN & TIMING COVER						
1-J03	1100	PISTON, CRANKSHAFT & FLYWHEEL						
1-M03	1200	VALVE SYSTEM						
1-C04	1300	INLET MANIFOLD						
1-D04	1310	EXHAUST MANIFOLD						
1-E04	1320	FUEL SYSTEM						
1-G04	1325	FUEL DISTRIBUTOR						
1-H04	1330	AIR CLEANER						
1-J04	1364	THROTTLE BODY						
1-K04	1370	EMISSION CONTROL SYSTEM (INLET SIDE)						
1-M04	1400	OIL PUMP & FILTER						
1-C05	1500	COOLING SYSTEM						
1-F05	1580	BRACKET, PULLEY & BELT						
1-C06	1600	CLUTCH DISC & COVER						
1-D06	1700	MANUAL TRANSMISSION CASE						
1-F06	1710	MANUAL TRANSMISSION GEARS						
1-K06	1720	MANUAL TRANSMISSION CHANGE CONTROL SYSTEM						
1-N06	1800	ENGINE ELECTRICAL SYSTEM						
1-D07	1830	ALTERNATOR						
1-F07	1840	STARTER (MT)						
1-H07	1840 A	STARTER (AT)						
1-J07	1850	BATTERY						
1-K07	1910	AUTOMATIC TRANSMISSION TORQUE CONVERTER, OIL PUMP & PIPINGS						
1-N07	1920	AUTOMATIC TRANSMISSION CASE & MAIN CONTROL SYSTEM						
1-H08	1925	AUTOMATIC TRANSMISSION CONTROL VALVE						
1-C09	1930	AUTOMATIC TRANSMISSION CLUTCHES & PLANETARY GEARS						
1-K09	1940	AUTOMATIC TRANSMISSION GOVERNOR, LOW & REVERSE PISTON						

SECTION NAME INDEX (CHASSIS)

LO.NO	SEC.NO	SECTION NAME	LO.NO	SEC.NO	SECTION NAME	LO.NO	SEC.NO	SECTION NAME
2-C03	2505	REAR PROPELLER SHAFT	2-G07	4340 A	BRAKE MASTER CYLINDER & POWER BRAKE (W/ANTI LOCK BRAKE)			
2-D03	2550	REAR DRIVE SHAFT						
2-E03	2600	REAR AXLE	2-I07	4360	BRAKE PIPINGS (W/O ANTI LOCK BRAKE)			
2-F03	2610	REAR BRAKE MECHANISMS						
2-H03	2710	REAR DIFFERENTIALS (NORMAL DIFF.)	2-K07	4360 A	BRAKE PIPINGS (W/ANTI LOCK BRAKE)			
			2-C08	4370	ANTILOCK BRAKE SYSTEM			
2-L03	2710 A	REAR DIFFERENTIALS (LIMITED SLIP DIFF.)	2-F08	4400	PARKING BRAKE SYSTEM			
2-D04	2800	REAR SUSPENSION MECHANISMS	2-H08	4500	FUEL PIPINGS			
2-E04	2810	REAR STABILIZER	2-J08	4600	CHANGE CONTROL SYSTEM (AT)			
2-F04	2830	REAR LOWER ARMS & SUB FRAME						
2-H04	3200	STEERING WHEEL						
2-I04	3210	STEERING COLUMN & SHAFTS						
2-J04	3220	STEERING GEAR (W/O POWER STEERING)						
2-L04	3220 A	STEERING GEAR (W/POWER STEERING)						
2-N04	3240	POWER STEERING SYSTEM						
2-D05	3300	FRONT AXLE						
2-F05	3310	FRONT BRAKE MECHANISMS						
2-G05	3400	FRONT SUSPENSION MECHANISMS						
2-J05	3410	CROSSMEMBER & STABILIZER						
2-K05	3700	TIRES & JACK						
2-C06	3900	ENGINE & T/MISSION MOUNTINGS						
2-D06	4000	EXHAUST SYSTEM						
2-E06	4140	MANUAL TRANSMISSION CLUTCH RELEASE & MASTER CYLINDERS						
2-F06	4145	MANUAL TRANSMISSION CLUTCH PIPINGS						
2-G06	4160	ACCELERATOR CONTROL SYSTEM						
2-H06	4200	FUEL TANK						
2-K06	4210	FUEL LID OPENER						
2-L06	4300	MANUAL TRANSMISSION CLUTCH & BRAKE PEDALS						
2-C07	4300A	AUTOMATIC TRANSMISSION BRAKE PEDAL						
2-E07	4340	BRAKE MASTER CYLINDER & POWER BRAKE (W/O ANTI LOCK BRAKE)						

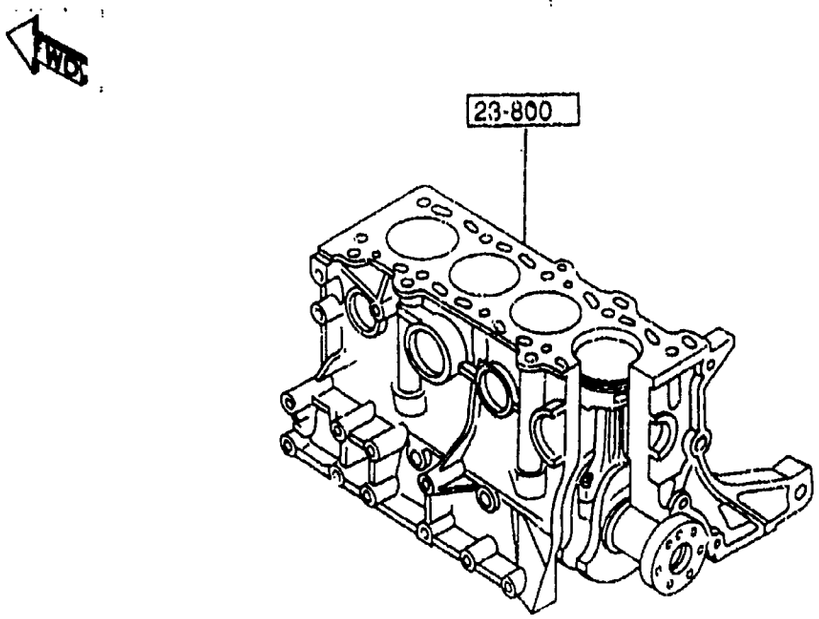

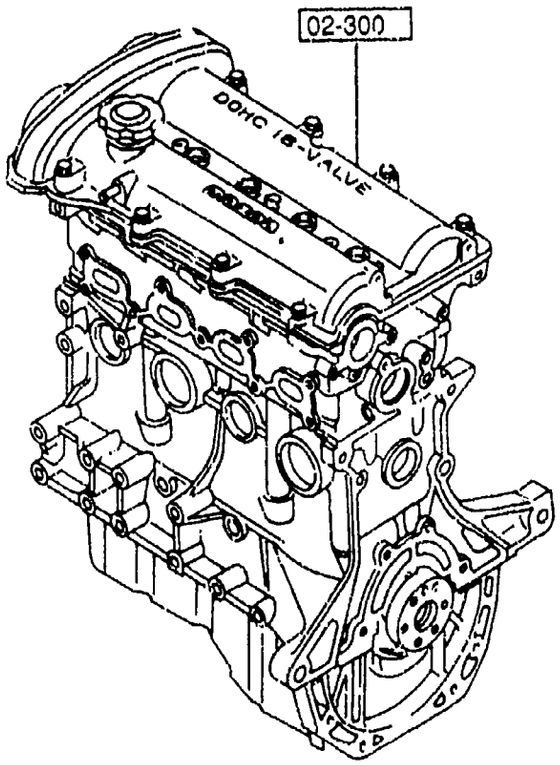

AUNA06

1-SEAL, VALVE ..... (8)
2-SEAL, VALVE ..... (8)
3-GASKET, HEAD COVER ..... (1)
4-GASKET, CYLINDER HEAD ..... (1)
5-SEAL, OIL ..... (1)
6-SEAL, OIL ..... (2)
7-GASKET, IN. MANIFOLD ..... (1)
8-GASKET, EX. MANIFOLD ..... (1)
9-GASKET, THERMOSTAT COVER .... (2)
10-GASKET, W. PUMP INLET ..... (1)
11-GASKET, OIL PAN ..... (1)
12-GASKET, OIL PAN ..... (1)
13-GASKET (L) ..... (1)
14-GASKET (INN), TIMING BELT (L) . (1)
15-GASKET (C), TIMING BELT (L) ... (1)
16-RUBBER, SEAL-SEAL PLATE ..... (1)
17-SEAL, OIL-CRANKSHAFT ..... (1)
18-RING, 'O' ..... (1)
19-GASKET, WATER PUMP ..... (1)
20-RING, 'O' ..... (1)

NOTE
(1) ··· (20) ⇒ 10-271S
THE D-CODE OF 10-271S CONSISTS OF FIGURE NUMBERS (1) THROUGH (20).

NOTE
(1) ··· (9) ⇒ 10-235S
THE D-CODE OF 10-235S CONSISTS OF FIGURE NUMBERS (1) THROUGH (9).

NOTE
(7) ··· (10) ⇒ 02-310S
THE D-CODE OF 02-310S CONSISTS OF FIGURE NUMBERS (7) THROUGH (10).

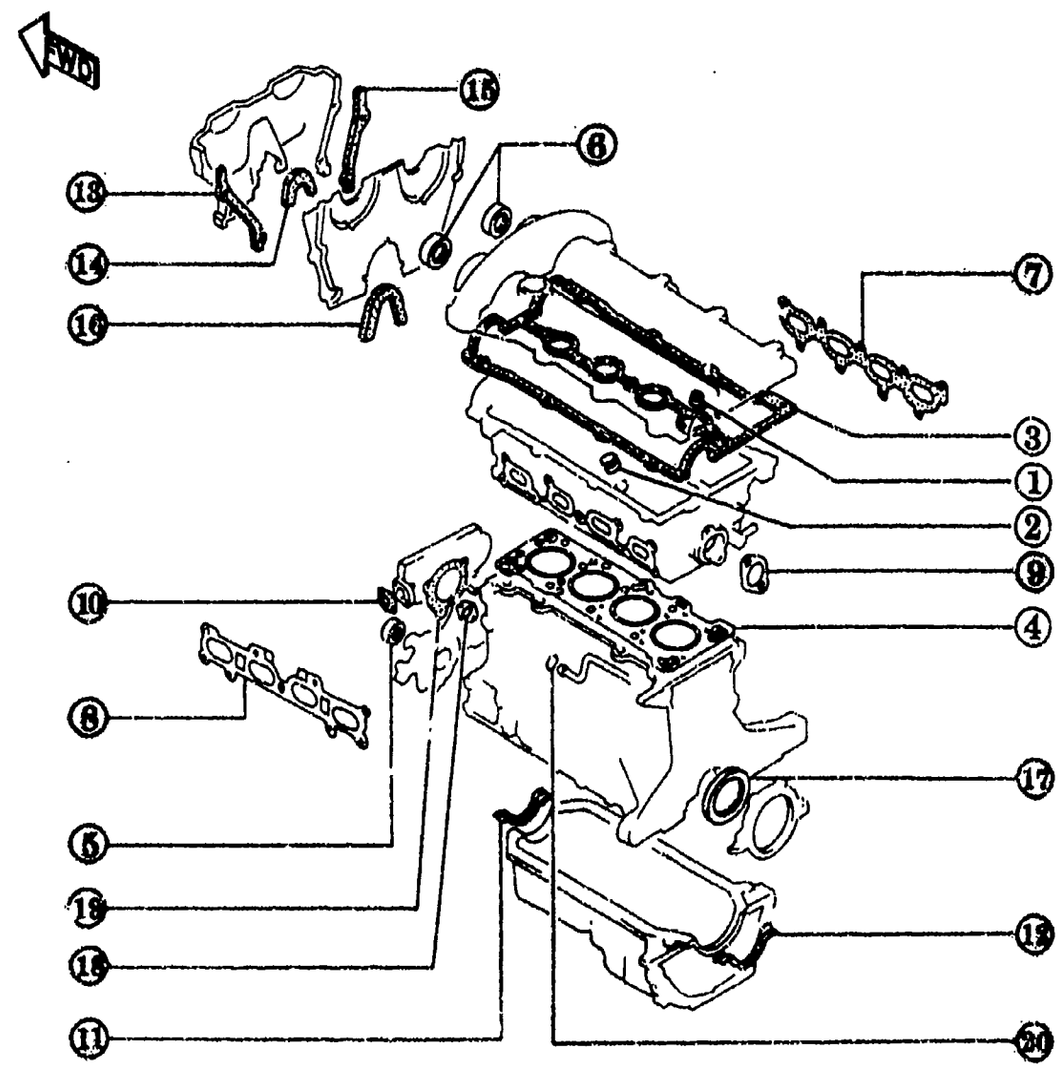

AUNA06

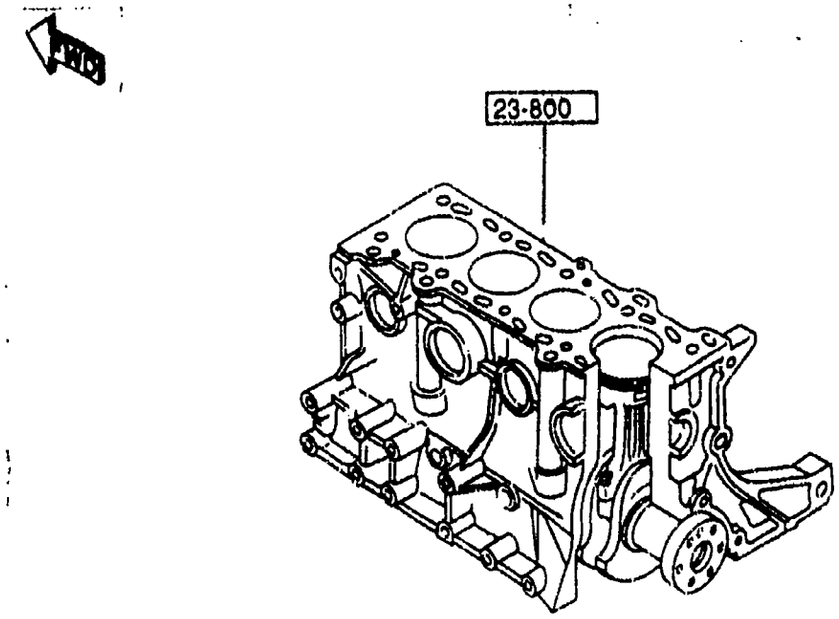

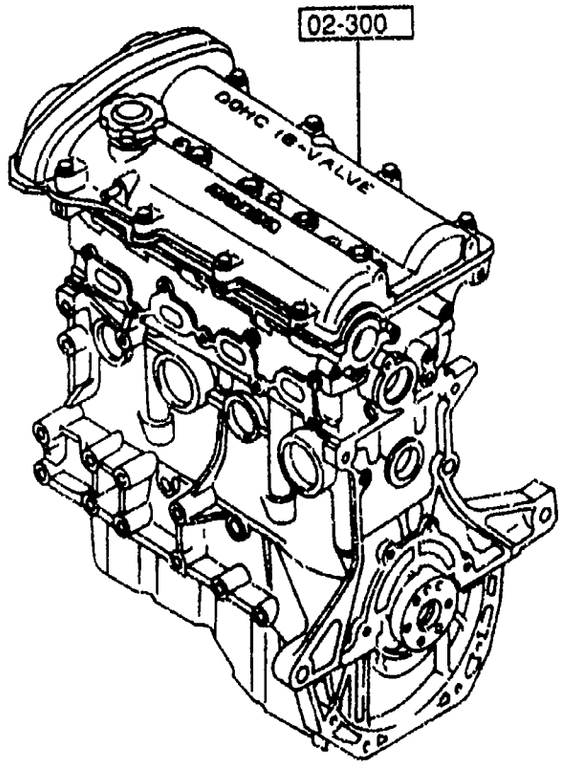

1000 -1 * ENGINE & GASKET SETS

PART NO.	QTY	MODEL/RESTRICTION	MODEL/RESTRICTION	MODEL/RESTRICTION	FROM-TO
02-300		ENGINE,PARTIAL			
BPS1-02-300	1				
02-310S		GASKET SET,PARTIAL ENGINE			
8ABA-02-310	1				
10-235S		GASKET SET,CYL. HEAD			
*8AN2-10-235A	1				
10-271S		GASKET SET,ENGINE			
8AN2-10-271B	1				
23-800		ENGINE,SHORT			
BPF1-02-200A	1				-7728
AN(BPF1-02-200B)					
*BPF1-02-200B	1				7728-

7728 NA35*V-738940

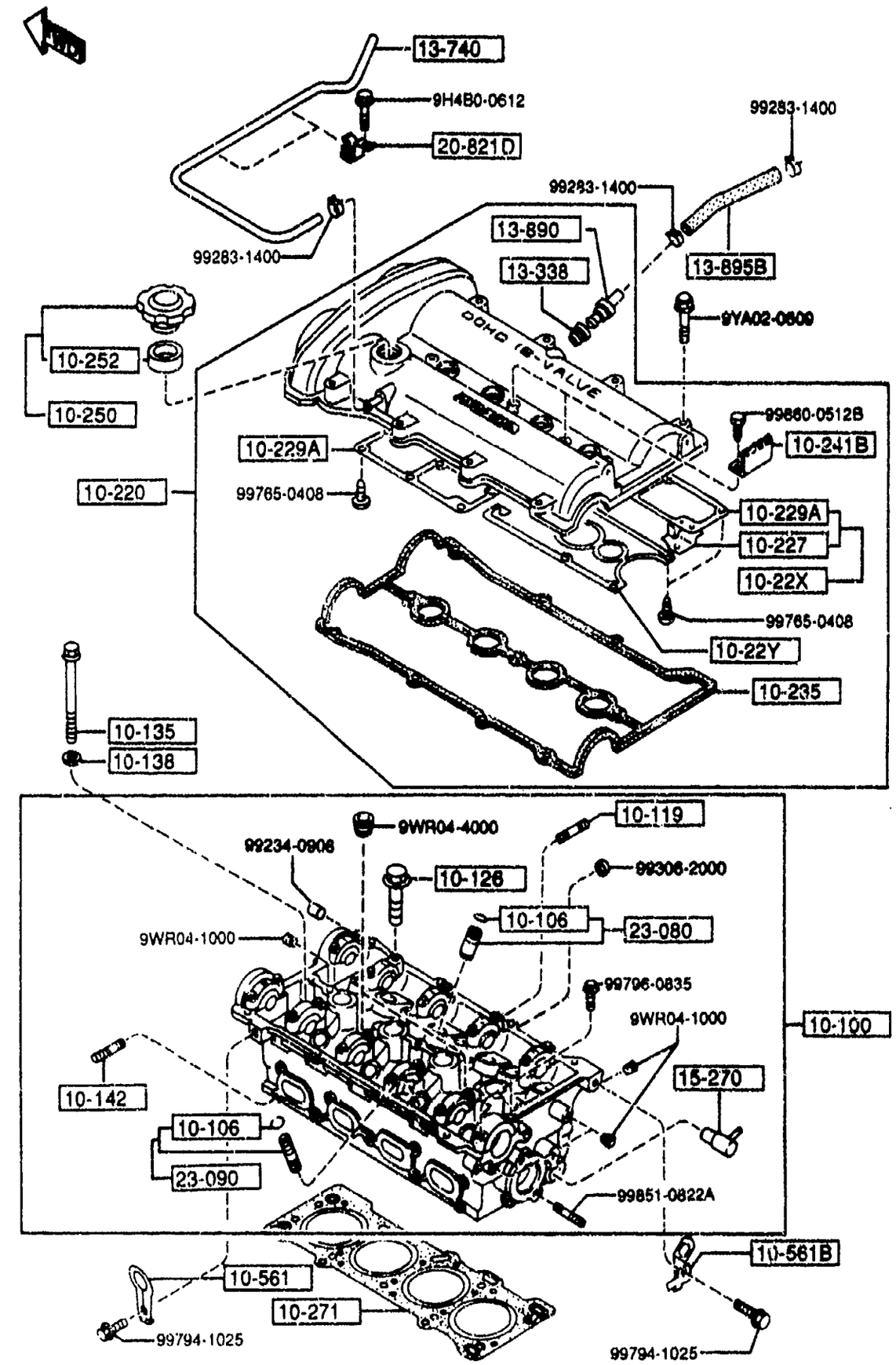

AUNA06

1010 -1 CYLINDER HEAD & COVER

PART NO.	QTY	MODEL/RESTRICTION	MODEL/RESTRICTION	MODEL/RESTRICTION	FROM-TO
10-100 BPE8-10-100A	1	HEAD,CYLINDER			
10-106 B660-10-106	16	CLIP,VALVE GUIDE			
10-119 FE0J-13-146	9	STUD			
10-126 KL02-10-126	20	BOLT,CAMSHAFT CAP			
10-135 B660-10-135A	10	BOLT,CYLINDER HEAD			
10-138 B630-10-138A	10	WASHER,PLAIN CYL. HEAD			
10-142 B661-10-104	9	STUD,EX. MANIFOLD			
10-22X B61P-10-22X	1	PLATE,OIL BAFFLE-INSIDE			
10-22Y B6S7-10-22Y	1	PLATE,OIL BAFFLE-EX.			
10-220 BPE8-10-210C	1	COVER,CYLINDER HEAD			
10-227 B61P-10-227	1	PLATE,BAFFLE			
10-229A B6S7-10-225	2	PLATE,OIL BAFFLE			
10-235 BP05-10-235C	1	GASKET,HEAD COVER			
10-241B BPE8-10-241	2	PROTECTOR,HT.CORD-S.TANK			

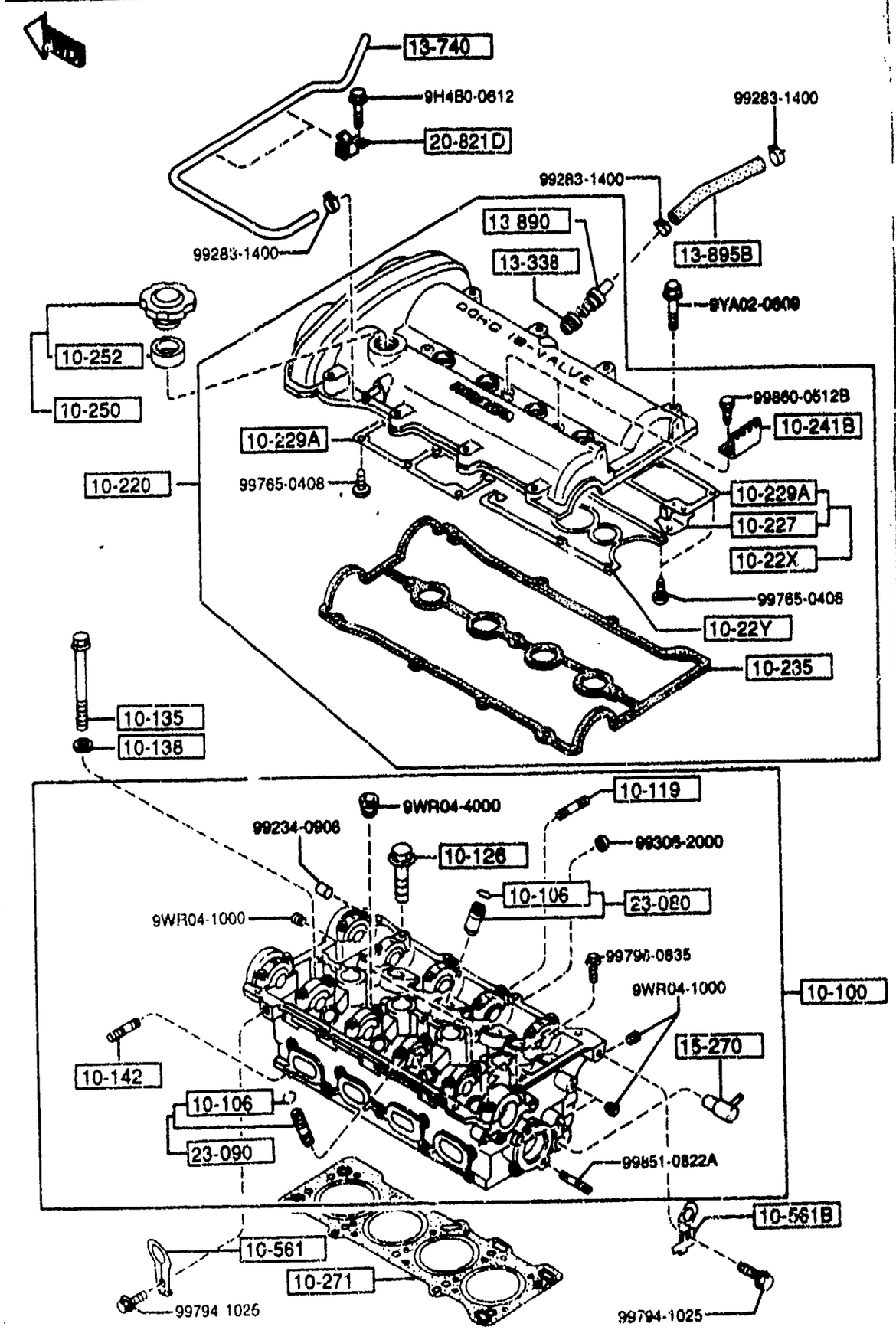

PART NO.	QTY	MODEL/RESTRICTION	MODEL/RESTRICTION	MODEL/RESTRICTION	FROM-TO
10-250 0453-10-250A	1	CAP,OIL FILLER			
10-252 0324-10-252	1	GASKET			
10-271 BP26-10-271	1	GASKET,CYLINDER HEAD NON ASBESTOS			
10-561 B660-10-561	1	HANGER,ENGINE			
10-561B BPE8-10-566A	1	HANGER,ENGINE-REAR			
13-338 E301-13-338A	1	SEAL,RUBBER			
13-740 BPE8-13-740A	1	HOSE,VENT.-PURGE CON T. V.			
13-890 BP05-13-890	1	VALVE,P.C.V.			
13-895B BPE8-13-895	1	HOSE,P.C.V.			
15-270 BPE8-15-270	1	PIPE,WATER BY PASS			
20-821D BPE8-20-820	2	CLIP,HOSE			
23-080 B6Z1-10-280	8	GUIDE,VALVE			
23-090 BPY0-10-290	8	GUIDE,VALVE			

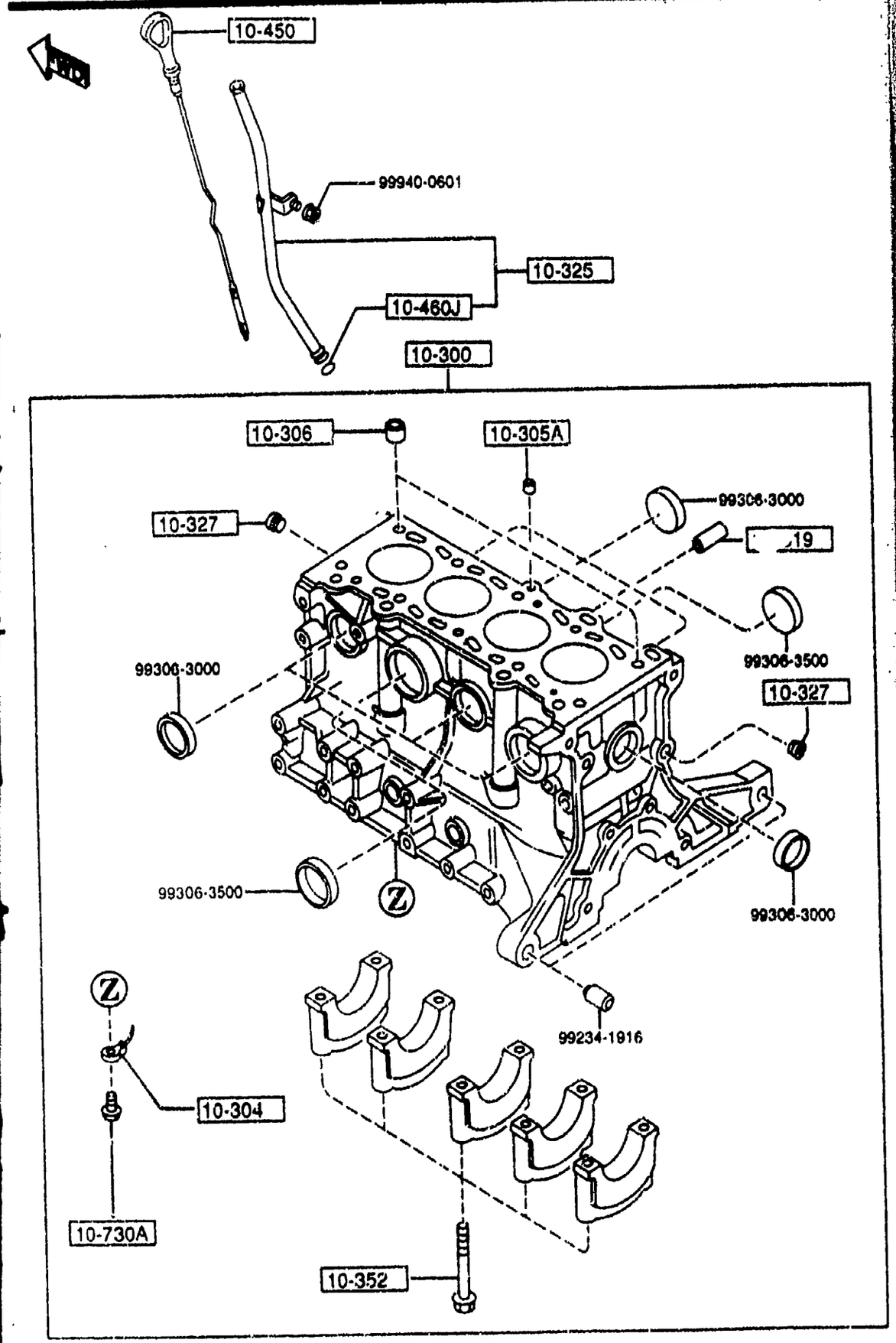

1030 -1 * CYLINDER BLOCK

PART NO.	QTY	MODEL/RESTRICTION	MODEL/RESTRICTION	MODEL/RESTRICTION	FROM-TO
10-300		BLOCK,CYLINDER			
BP05-10-300N AN(BP05-10-300P)	1				-7728
*BP05-10-300P	1				7728-
10-304		JET,OIL			
BP01-10-580A	4				
10-305A		PLUG			
B366-10-305	1				
10-306		PIN,TUBULAR			
B630-10-306	2				
10-319		JOINT			
E5B6-10-319C	1				-7728
*BP4H-10-319	1				7728-
10-325		PIPE,OIL LEVEL GAUGE			
BPE8-10-440	1				
10-327		PLUG,BLIND			
0221-10-327	2				
10-352		BOLT,BEARING CAP			
B630-10-352	10				
10-450		GAUGE,OIL LEVEL			
BPE8-10-450	1				
10-460J		RING,'O'			
99541-00007	1				
10-730A		VALVE,OIL JET			
SE01-10-730	4				

7728 NA35*V-738940

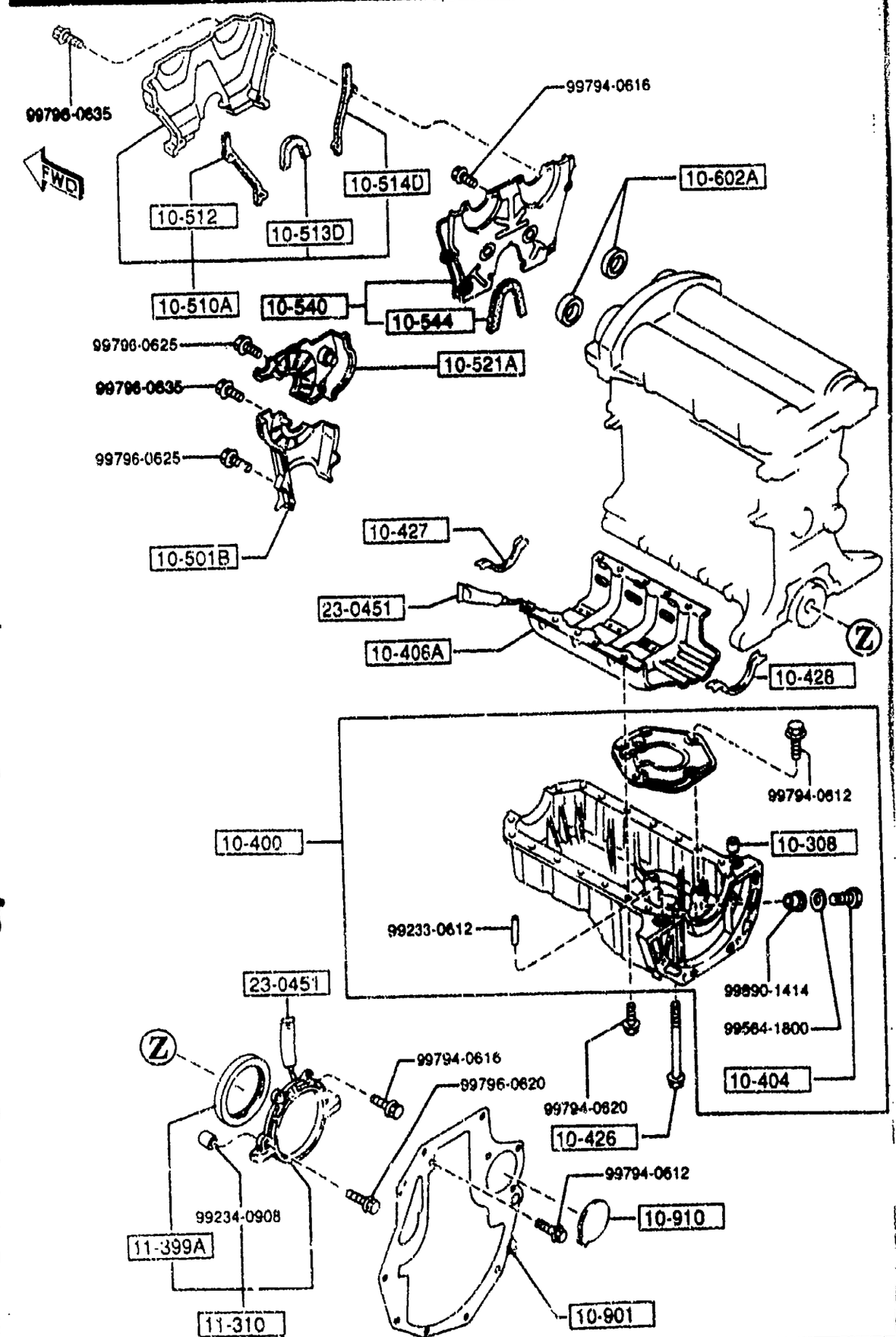

1040 -1 OIL PAN & TIMING COVER

PART NO.	QTY	MODEL/RESTRICTION	MODEL/RESTRICTION	MODEL/RESTRICTION	FROM-TO
10-308		PIN,TUBULAR			
B6F4-10-308	1				
10-400		PAN,OIL			
BPE8-10-400A	1				-7801
*BPY0-10-400B	1				7801-
10-404		PLUG,DRAIN			
B6S7-10-404A	1				
10-406A		PLATE,OIL BAFFLE-CYL . BLK			
BPE8-10-40V	1				
10-426		BOLT			
B6S7-10-465	2				
A 10-427		GASKET,OIL PAN			
B6F4-10-427	1				
10-428		GASKET,OIL PAN			
B6F4-10-428	1				
10-501B		COVER,TIMING BELT-LW R			
B660-10-501E	1	DAIKYOH			
10-510A		COVER(UP.),TIMING CH AIN			
B61P-10-510	1				
10-512		GASKET(L)			
B61P-10-512	1	NON ASBESTOS			
10-513D		GASKET(INH),TIMING B ELT(L)			
B61P-10-513	1	NON ASBESTOS			
10-514D		GASKET(C),TIMING BEL T(L)			
B61P-10-514	1	NON ASBESTOS			
10-521A		COVER,TIMING BELT-C.			

7801 NA35*V-739024

1040 OIL PAN & TIMING COVER

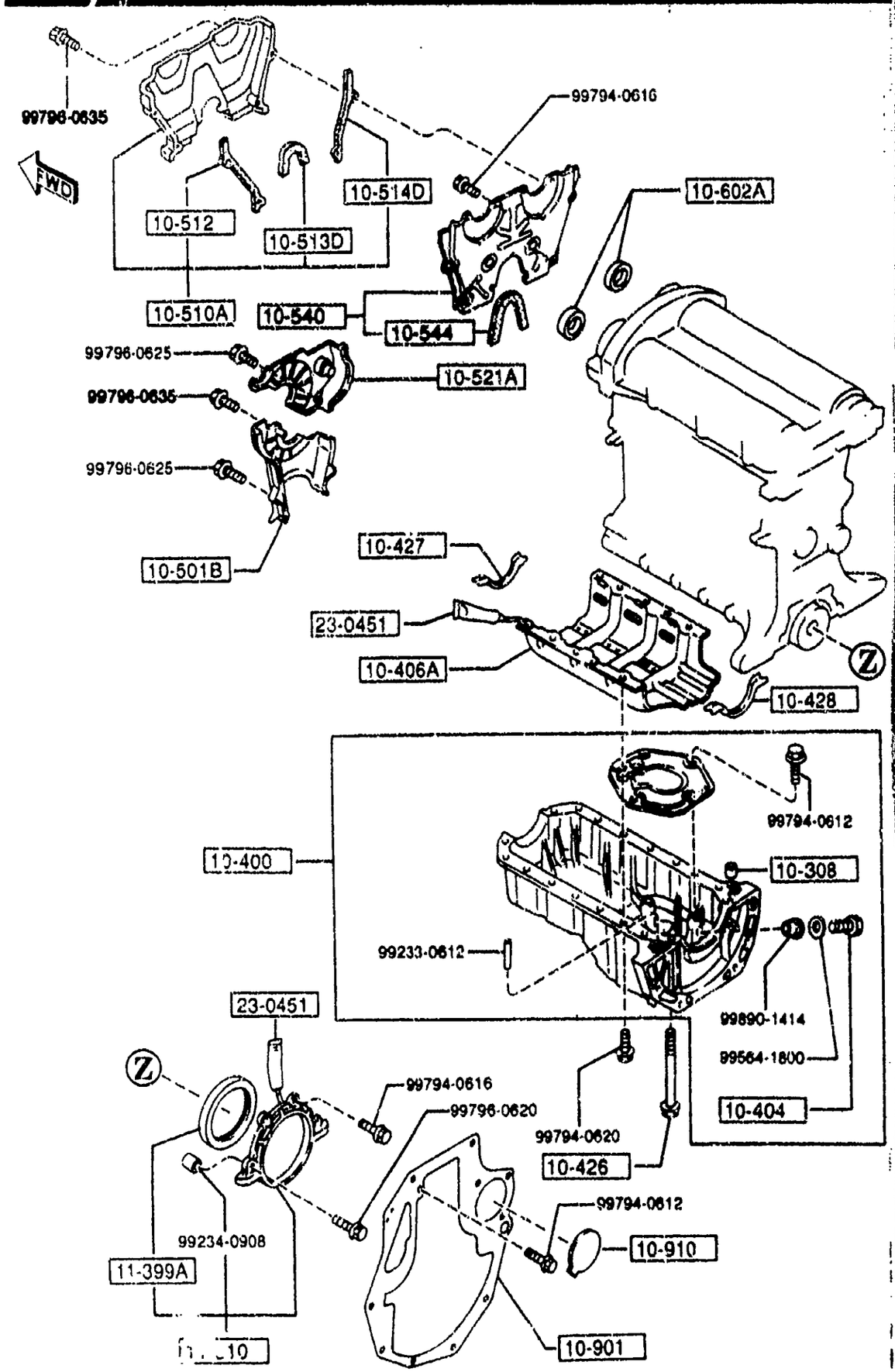

PART NO.	QTY	MODEL/RESTRICTION	MODEL/RESTRICTION	MODEL/RESTRICTION	FROM-TO
CONT'D					
B660-10-521B	1				
10-540		PLATE,SEAL-T.BELT COVER U			
B61P-10-540C	1				
10-544		RUBBER,SEAL-SEAL PLATE			
B61P-10-544	1				
10-602A		SEAL,OIL			
FS05-10-602A	2				
10-901		PLATE,END			
B64J-10-901	1	(AT)			
B61P-10-901A	1	(MT)			-7708
A (B61P-10-901B)					
*B61P-10-901B	1	(MT)			7708-
10-910		COVER,END PLATE			
B64J-10-903	1	(AT)			
11-310		COVER,REAR			
B366-11-310C	1	RYOBI			
11-399A		SEAL,OIL-CRANKSHAFT			
BP05-11-312	1				
23-0451		TUBE,SILICON			
8527-77-739	1				

7708 NA35*V-738592

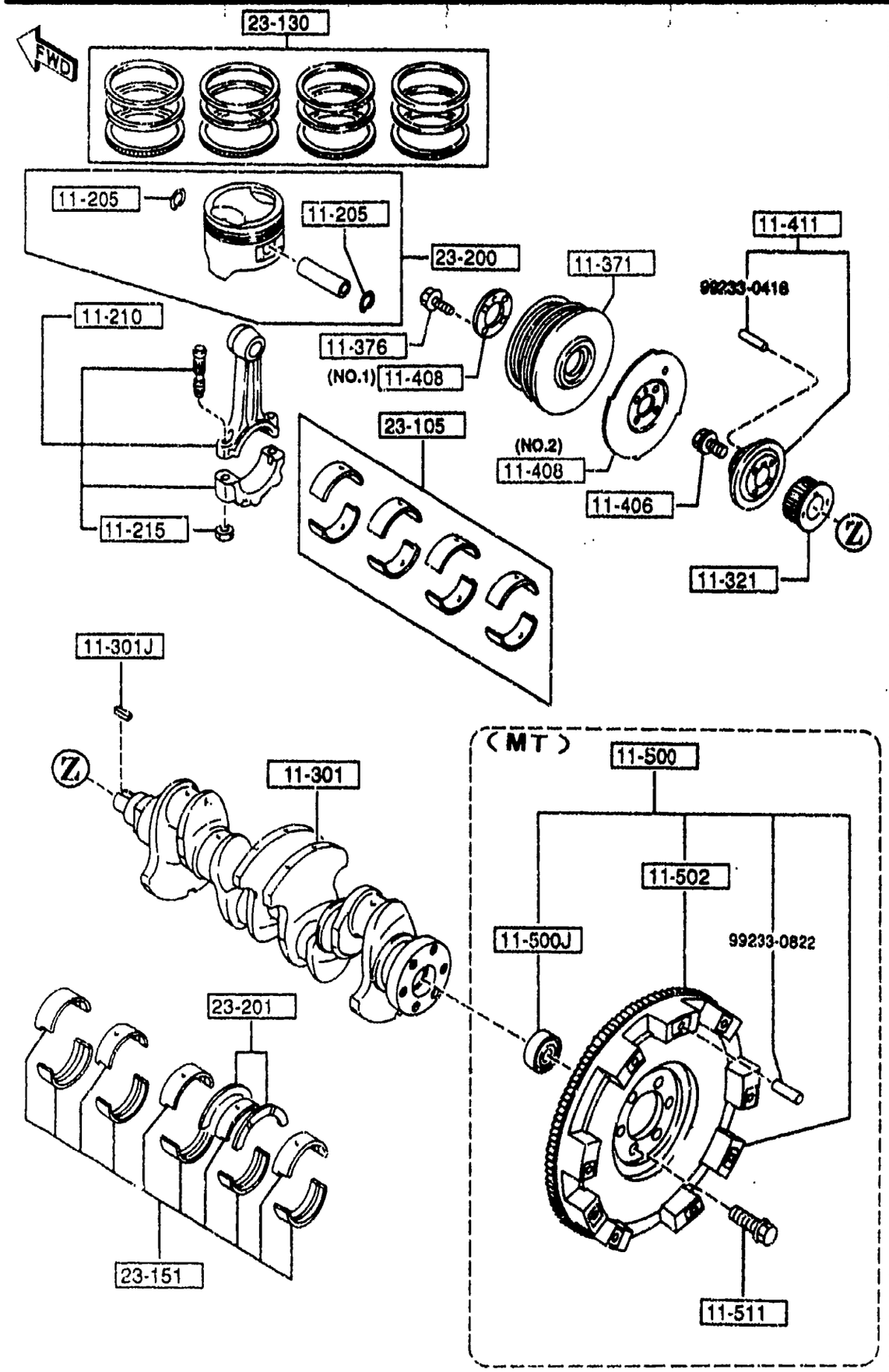

PART NO.	QTY	MODEL/RESTRICTION	MODEL/RESTRICTION	MODEL/RESTRICTION	FROM-TO
11-205		CLIP			
0221-11-205	8				
11-210		ROD,CONNECTING			
B6S7-11-210E	4				
11-215		NUT,CONNECTING ROD			
B6S7-11-215A	8				
11-301		CRANKSHAFT			
BP06-11-300C	1				
11-301J		KEY,WOODRUFF PULLEY			
B3C7-11-317	1				
11-321		PULLEY,TIMING BELT			
B3C7-11-321	1				
11-371		PULLEY,CRANKSHAFT			
BPD3-11-401A	1				-7801
*BPD4-11-401	1	NOK			7801-
11-376		BOLT,PULLEY			
JF01-11-405		NOK			
AN(JF01-11-405A)	4				-7623
*JF01-11-405A	4	OHSAKA RASHI (6X16)			7623-
11-406		BOLT,LOCK-C.SHAFT PULLEY			
B3C7-11-406	1				
11-408		PLATE,CRANKSHAFT PULLEY			
B6BF-11-408B	1	(ILLUST. NO.2)			
B3C7-11-408	1	(ILLUST. NO.1)			-7801
11-411		BOSS,PULLEY			
B6BF-11-400A	1				
11-500		WHEEL,FLY			
BPR7-11-500	1	(MT)			

7623 NA35*V-738188
7801 NA35*V-739024

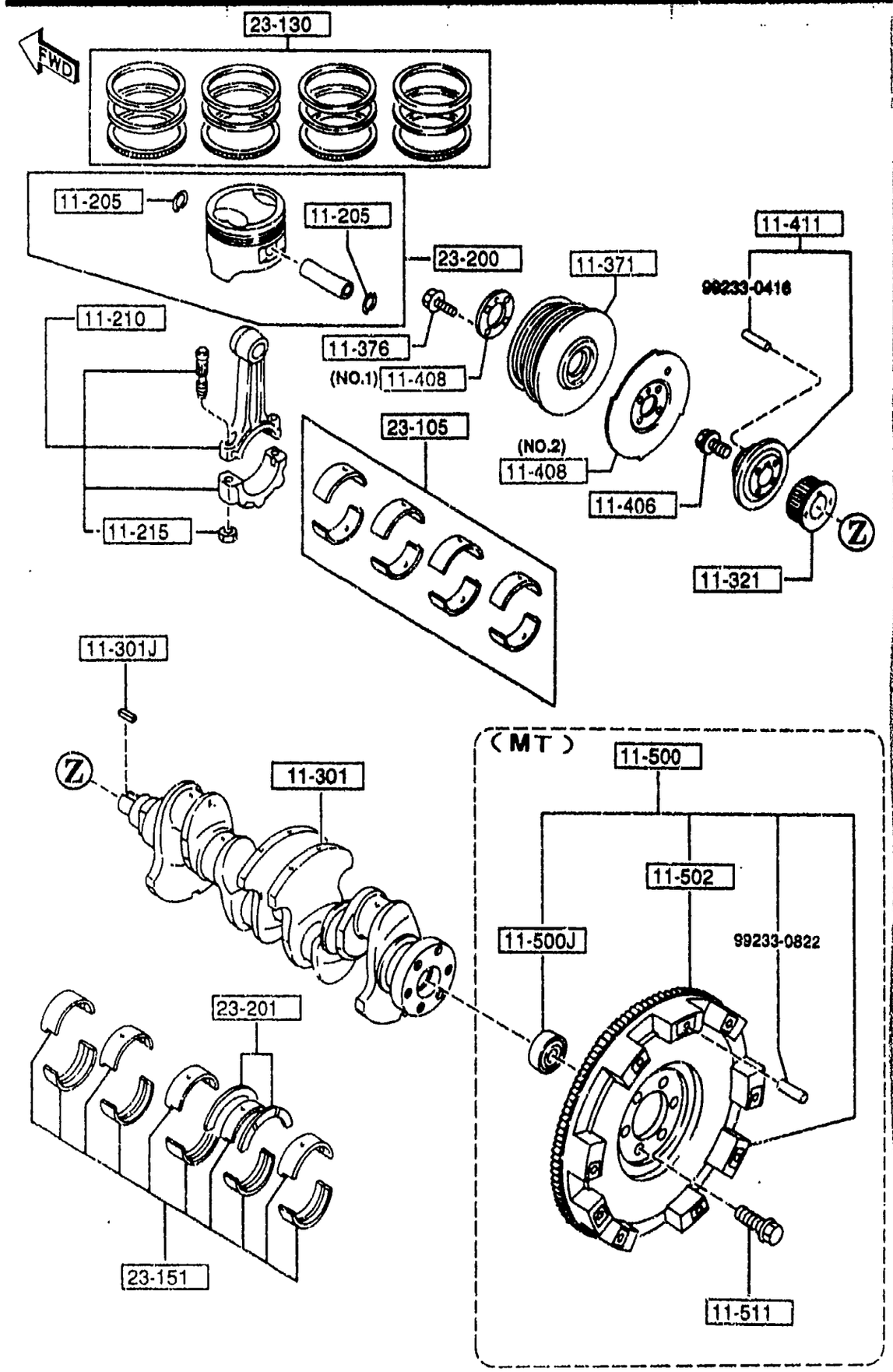

PART NO.	QTY	MODEL/RESTRICTION	MODEL/RESTRICTION	MODEL/RESTRICTION	FROM-TO
11-500J		BEARING,BALL-FLY WHEEL			
F801-11-303	1	(MT)			
11-502		GEAR,RING-FLY WHEEL			
B367-11-502	1	YOSHIWA (MT)			
0110-11-502	1	KANDA (MT)			
11-511		BOLT,LOCK-FLYWHEEL			
F201-11-511A	6	(MT)			
23-105		METAL SET,CONN.ROD			
B6Y2-11-SE0A	1	STD.			
B6Y2-11-SFXA	1	O.S. 0.50			
B6Y2-11-SFYA	1	O.S. 0.75			
B6Y2-11-SF0A	1	O.S. 0.25			
23-130		RING SET,PISTON			
BPY1-11-SC0	1	STD.			
BPY1-11-SDX	1	O.S. 0.50			
BPY1-11-SD0	1	O.S. 0.25			
23-151		METAL SET,MAIN BRG.			
B6Y2-11-SG0	1	STD.			
B6Y1-11-SHX	1	O.S. 0.50			
B6Y1-11-SHY	1	O.S. 0.75			
B6Y1-11-SH0	1	O.S. 0.25			
23-200		PISTON SET			
BPY1-11-SA0A	4	STD.			
BPY1-11-SBXA	4	O.S. 0.50			

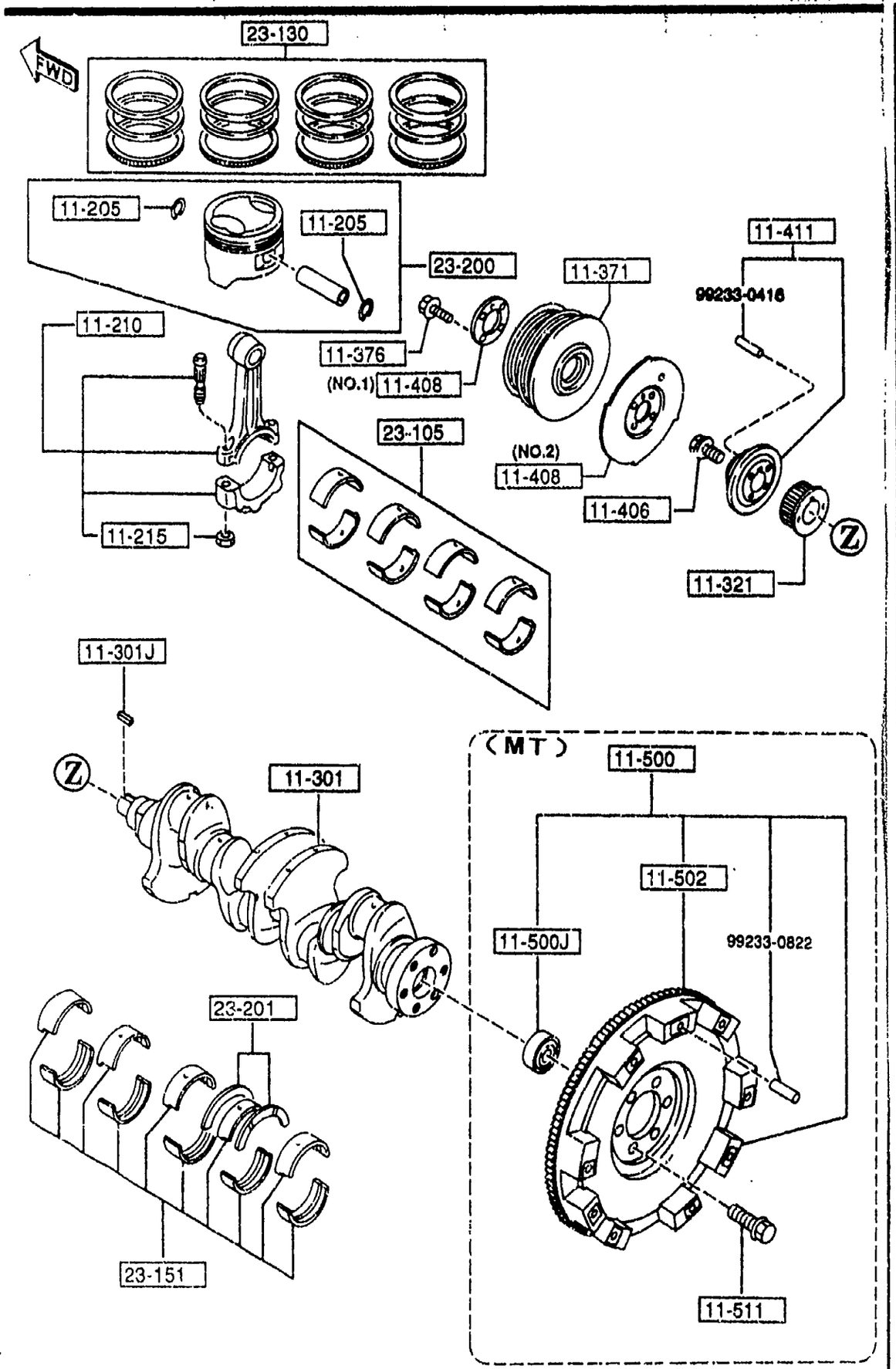

PART NO.	QTY	MODEL/RESTRICTION	MODEL/RESTRICTION	MODEL/RESTRICTION	FROM-TO
CONT'D					
BPY1-11-SB0A	4	O.S. 0.25			
23-201		METAL SET,THRUST			
B6Y1-11-SJ0	1	STD.			
B6Y1-11-SKX	1	O.S. 0.50			
B6Y1-11-SKY	1	O.S. 0.75			
B6Y1-11-SK0	1	O.S. 0.25			

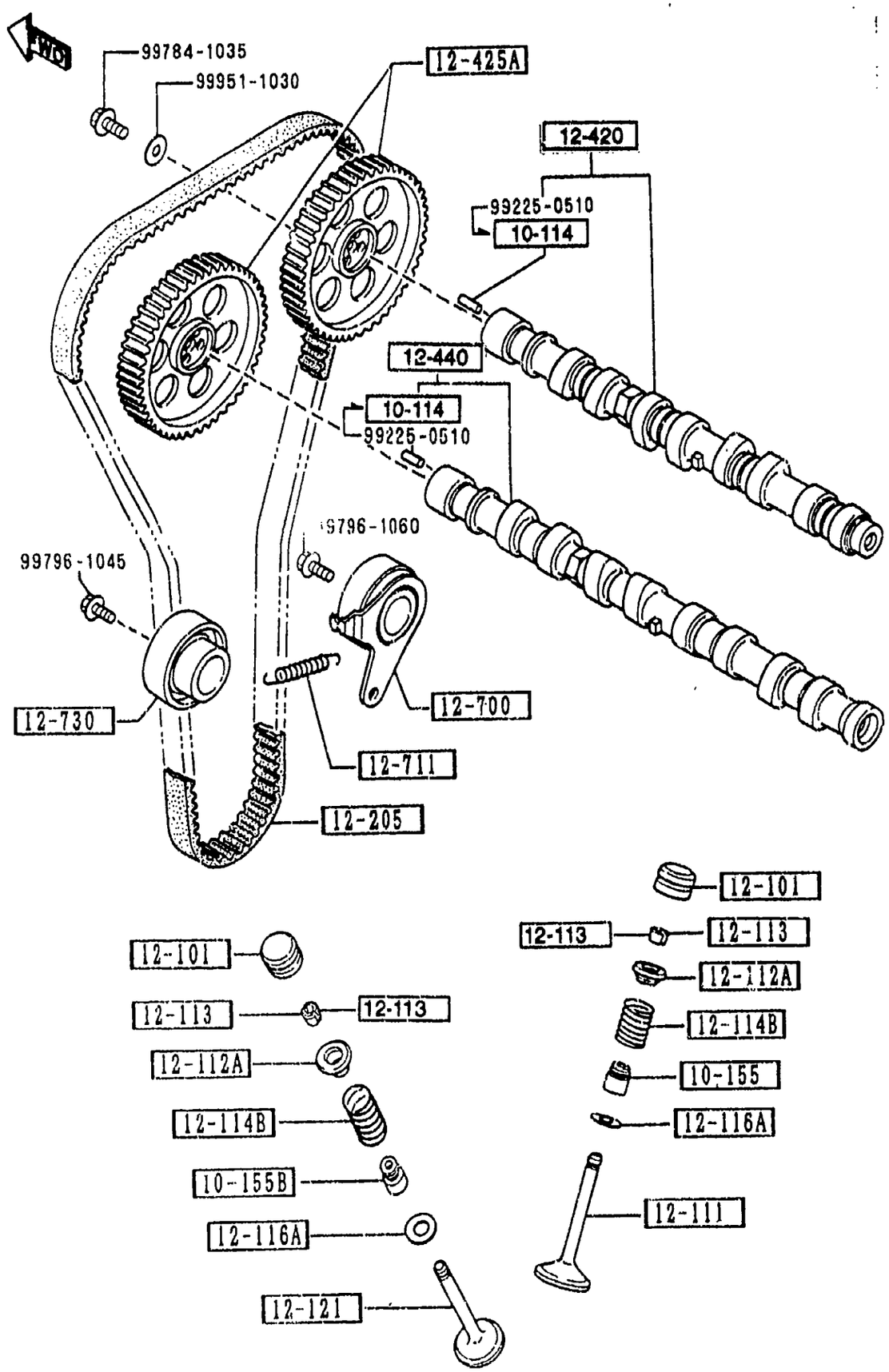

1200 -1 VALVE SYSTEM

PART NO.	QTY	MODEL/RESTRICTION	MODEL/RESTRICTION	MODEL/RESTRICTION	FROM-TO
10-114		PIN,SET-CAMSHAFT			
F801-10-114	2				6A01-
10-155		SEAL,VALVE			
KL01-10-155	8	NOK			
10-155B		SEAL,VALVE			
KL02-10-155	8	NOK			
12-101		ADJUSTER,HYDRAULIC L ASH			
KL01-12-101B	16	NITTAN VALVE			
12-111		VALVE,INLET			
BP06-12-111A	8	FUJI VALVE			
BP1B-12-111	8	NITTAN VALVE			
12-112A		SEAT,VALVE SPG-UP.			
B6BF-12-113	16				
12-113		COTTER,VALVE-IN.			
FS01-12-114	32				
12-114B		SPRING,VALVE			
BP05-12-125	16				
12-116A		SEAT,VALVE SPG.-LWR			
B660-12-123A	16				
12-121		VALVE,EXHAUST			
BP05-12-121A	8				
12-205		BELT,TIMING			
B6S7-12-205D	1	UNITTA			
12-420		CAMSHAFT			
BP05-12-420E	1				

6A01 NA35*V-720311

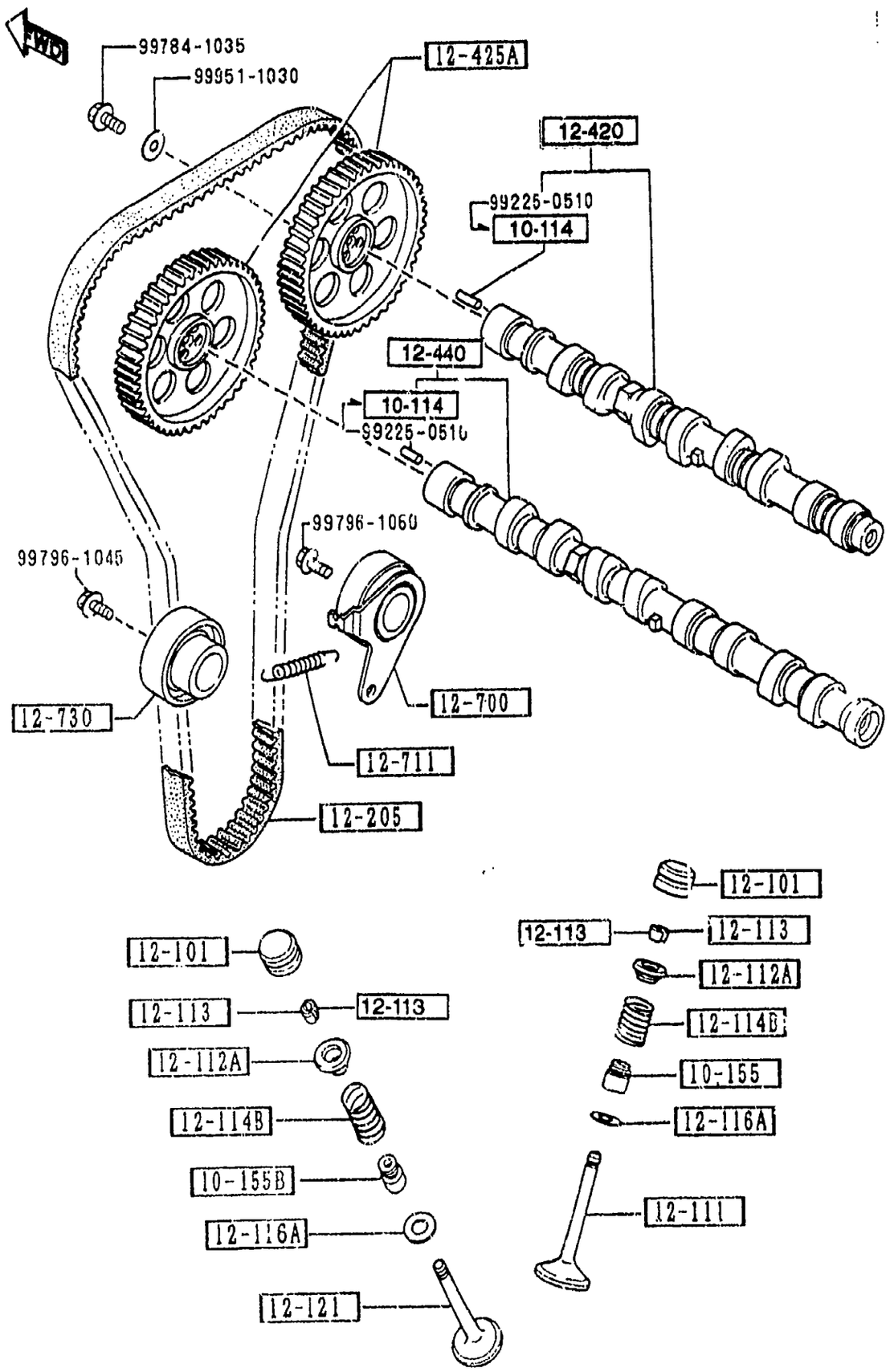

1200 -2 * VALVE SYSTEM

PART NO.	QTY	MODEL/RESTRICTION	MODEL/RESTRICTION	MODEL/RESTRICTION	FROM-TO
12-425A B6S7-12-425A	2	PULLEY,CAMSHAFT			
12-440 BP06-12-440C	1	CAMSHAFT,EXHAUST			
12-700 B660-12-700E	1	TENSIONER,TIMING BELT			
12-711 B660-12-711C	1	SPRING,TENSIONER			
12-730 B660-12-730C	1	IDLER,TIMING BELT			

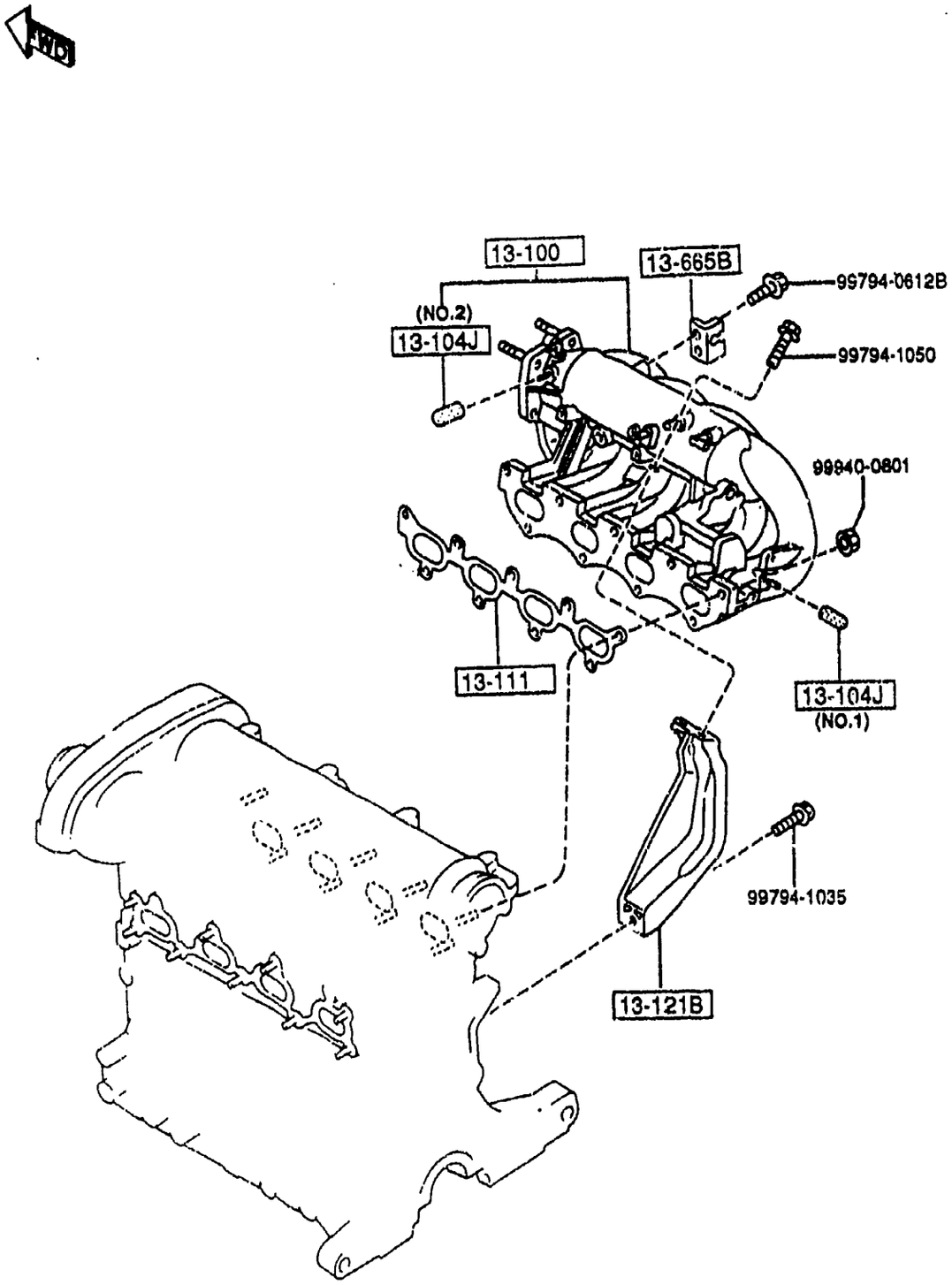

1300 -1 * INLET MANIFOLD

PART NO.	QTY	MODEL/RESTRICTION	MODEL/RESTRICTION	MODEL/RESTRICTION	FROM-TO
13-100		MANIFOLD,INLET			
BPE8-13-100D	1				
13-104J		CAP,BLIND			
F8L7-13-104	1	(ILLUST. NO.1) (MT)			
1010-13-104	1	(ILLUST. NO.2)			
13-111		GASKET,IN.MANIFOLD			
BP05-13-111	1	NON ASBESTOS			
13-121B		STAY,MANIFOLD			
BPE8-13-121	1				
13-665B		BRACKET,ACCEL WIRE			
BPR5-13-665	1				

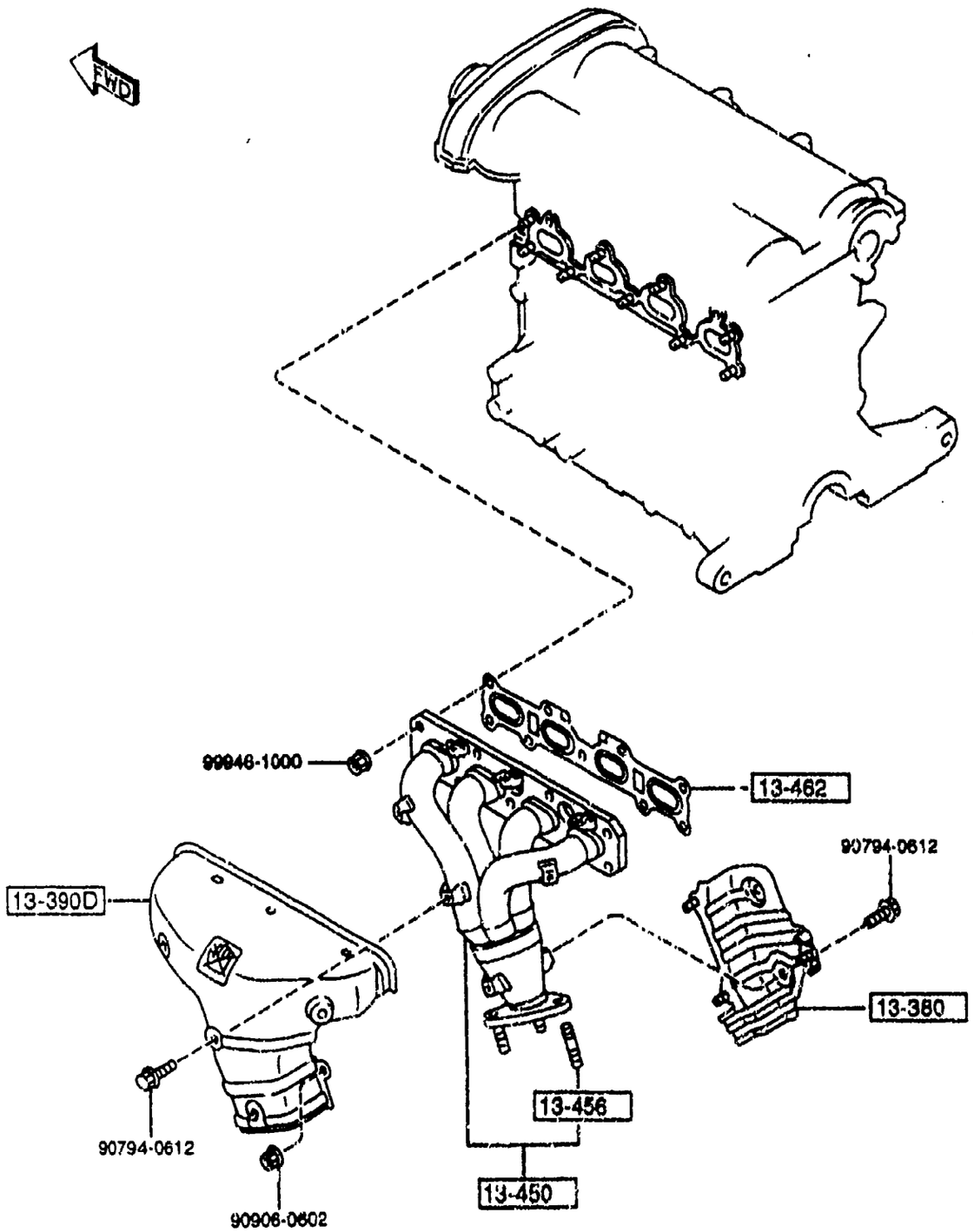

1310 -1 * EXHAUST MANIFOLD

PART NO.	QTY	MODEL/RESTRICTION	MODEL/RESTRICTION	MODEL/RESTRICTION	FROM-TO
13-380		INSULATOR,HEAT			
BPE8-13-380A	1				
13-390D		INSULATOR,EX.MANIFOLD			
BPE8-13-390	1				
13-450		MANIFOLD,EXHAUST			
BPE8-13-450	1				
13-456		STUD			
2306-13-456	3				
13-462		GASKET,EX.MANIFOLD			
BP05-13-460	1	NON ASBESTOS			

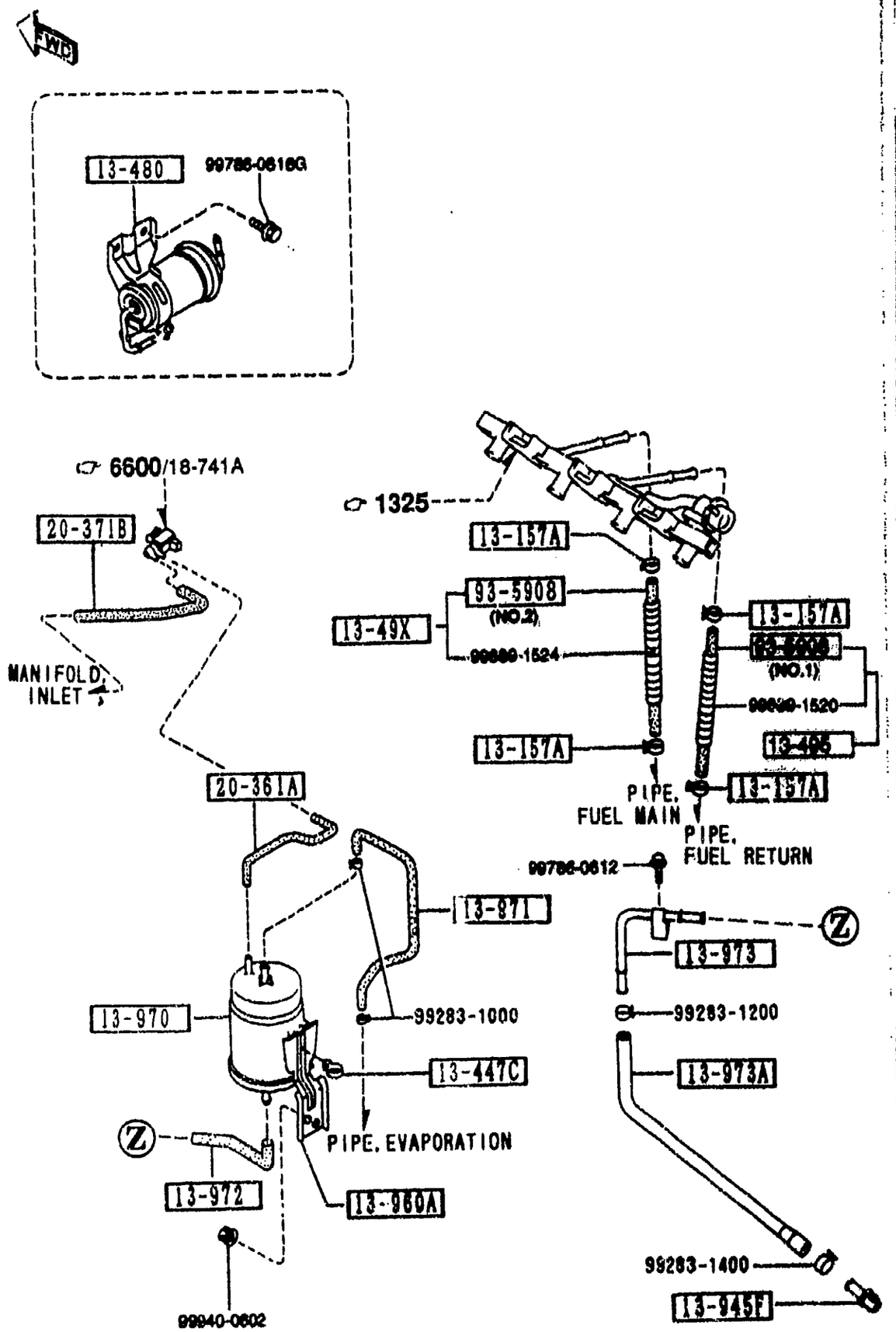

PART NO.	QTY	MODEL/RESTRICTION	MODEL/RESTRICTION	MODEL/RESTRICTION	FROM-TO
13-157A 8574-13-157	4	CLIP			
13-447C B61P-13-447	1	CLAMP,HOSE			
13-480 B61P-20-490	1	FILTER,FUEL			
13-49X BPE8-13-49X	1	HOSE,FUEL-EGI			
13-495 BPE8-13-495	1	HOSE,FUEL			
13-945F JE16-13-298	1	CONNECTOR			
13-960A B61P-13-960	1	BRACKET,CANISTER			
13-970 JE16-13-970A	1	CANISTER			
13-971 B6CA-13-971	1	HOSE,VENTILATION			
13-972 B6CA-13-972	1	HOSE,EVAPORATION			
13-973 B61P-13-97YA	1	HOSE,DRAIN			
13-973A B61P-13-973A	1	HOSE,EVAPORATION			
20-361A B61P-20-361	1	TUBE,VACUUM			
20-371B BPE8-20-371	1	TUBE,VACUUM			

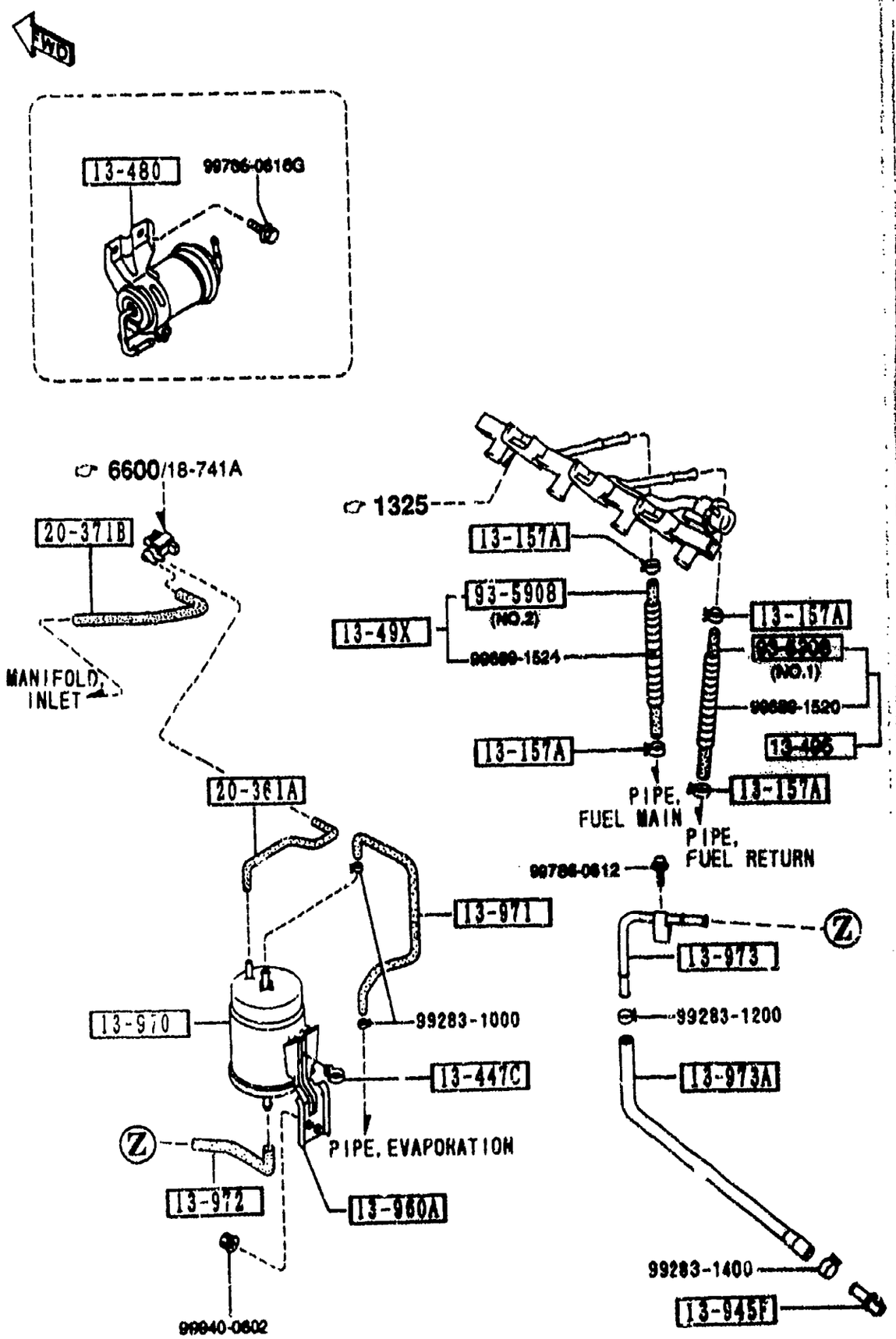

PART NO.	QTY	MODEL/RESTRICTION	MODEL/RESTRICTION	MODEL/RESTRICTION	FROM-TO
93-5908		HOSE			
*99359-0830M	1	(ILLUST. NO.1)			
99359-0834	1	(ILLUST. NO.2)			

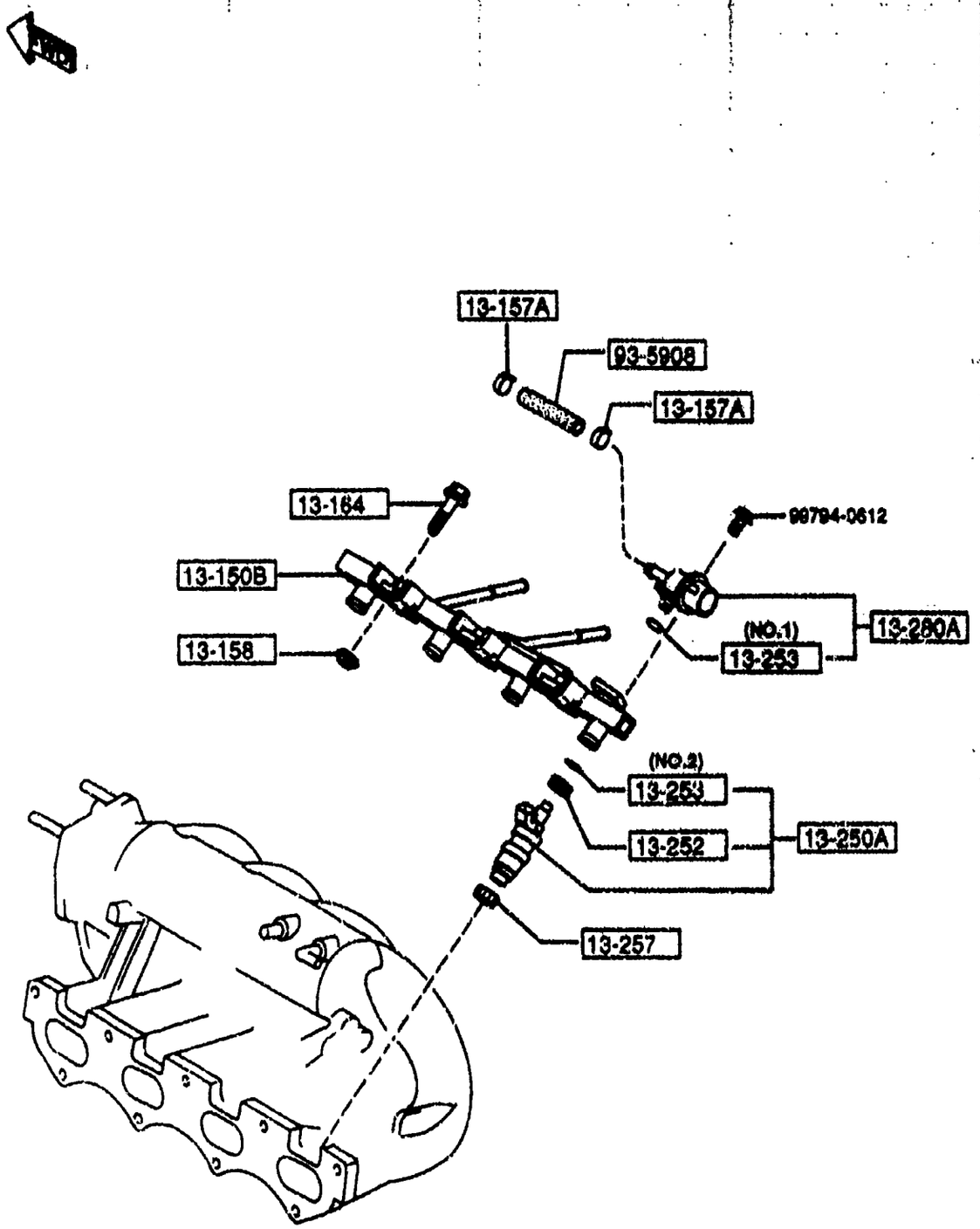

1325 -1 * FUEL DISTRIBUTOR

PART NO.	QTY	MODEL/RESTRICTION	MODEL/RESTRICTION	MODEL/RESTRICTION	FROM-TO
13-150B		DISTRIBUTOR,FUEL			
BPE0-13-150	1				
13-157A		CLIP			
8574-13-157	2				
13-158		INSULATOR,FUEL DIST.			
B675-13-158	3				
13-164		BOLT,FUEL DISTRIBUTOR			
F8B3-13-164	3				
13-250A		INJECTION,FUEL-M.P.ELECT.			
BP06-13-250	4				
13-252		GROMMET			
8574-13-252	4				
13-253		RING,'O'			
9601-13-253	1	AISAN INDUSTRY (ILLUST. NO.1)			
8574-13-253	4	(ILLUST. NO.2)			
13-257		INSULATOR,INJECTION			
JE06-13-257	4				
13-280A		PRESSURE RG.,FUEL			
KJ01-13-280	1				
93-5908		HOSE			
99359-0809	1				

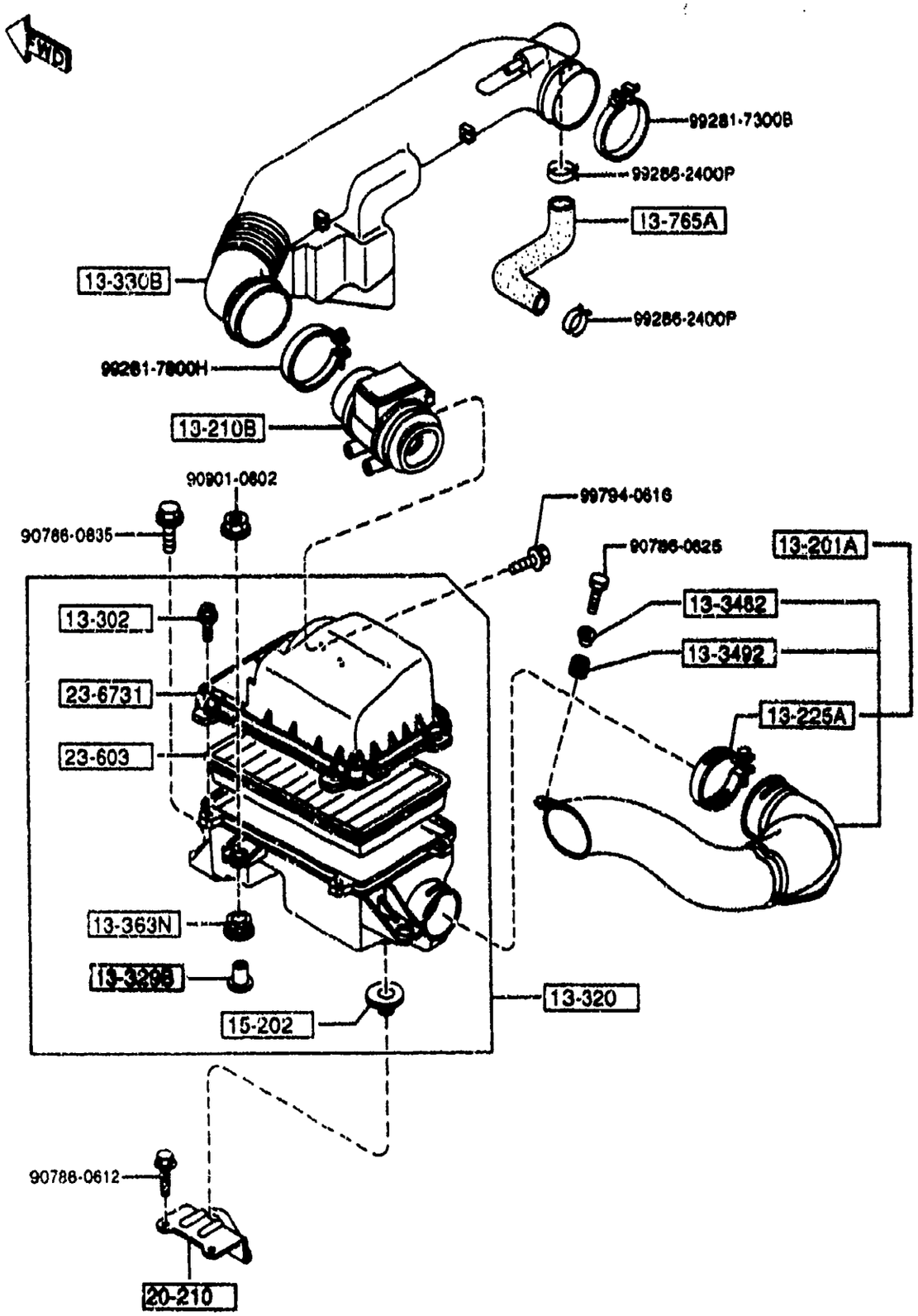

PART NO.	QTY	MODEL/RESTRICTION	MODEL/RESTRICTION	MODEL/RESTRICTION	FROM-TO
13-201A BPE8-13-200	1	DUCT,FRESH AIR			
13-210B B6BF-13-215	1	SENSOR,AIR FLOW			
13-225A B61P-13-735	1	CLAMP,HOSE			
13-302 F201-13-302A	4	BOLT,AIR CLEANER			
13-320 BPE8-13-320	1	CLEANER,AIR			
13-329B MFE51-13-329	3	SPACER			
13-330B BPE8-13-331B	1	PIPE,AIR INTAKE			
13-3482 SLA1-13-321	1	SPACER,AIR INT.PIPE			
13-3492 S501-13-349	1	INSULATOR			
13-363N FE51-13-363	3	RUBBER,MOUNTING			
13-765A BPE8-13-765A	1	HOSE,AIR			
15-202 B61P-13-Z66	1	RUBBER,MOUNT			
20-210 *B61P-20-211	1	BRACKET,AIR CLEANER			
23-603 B6S7-13-Z40	1	ELEMENT,AIR CLEANER			

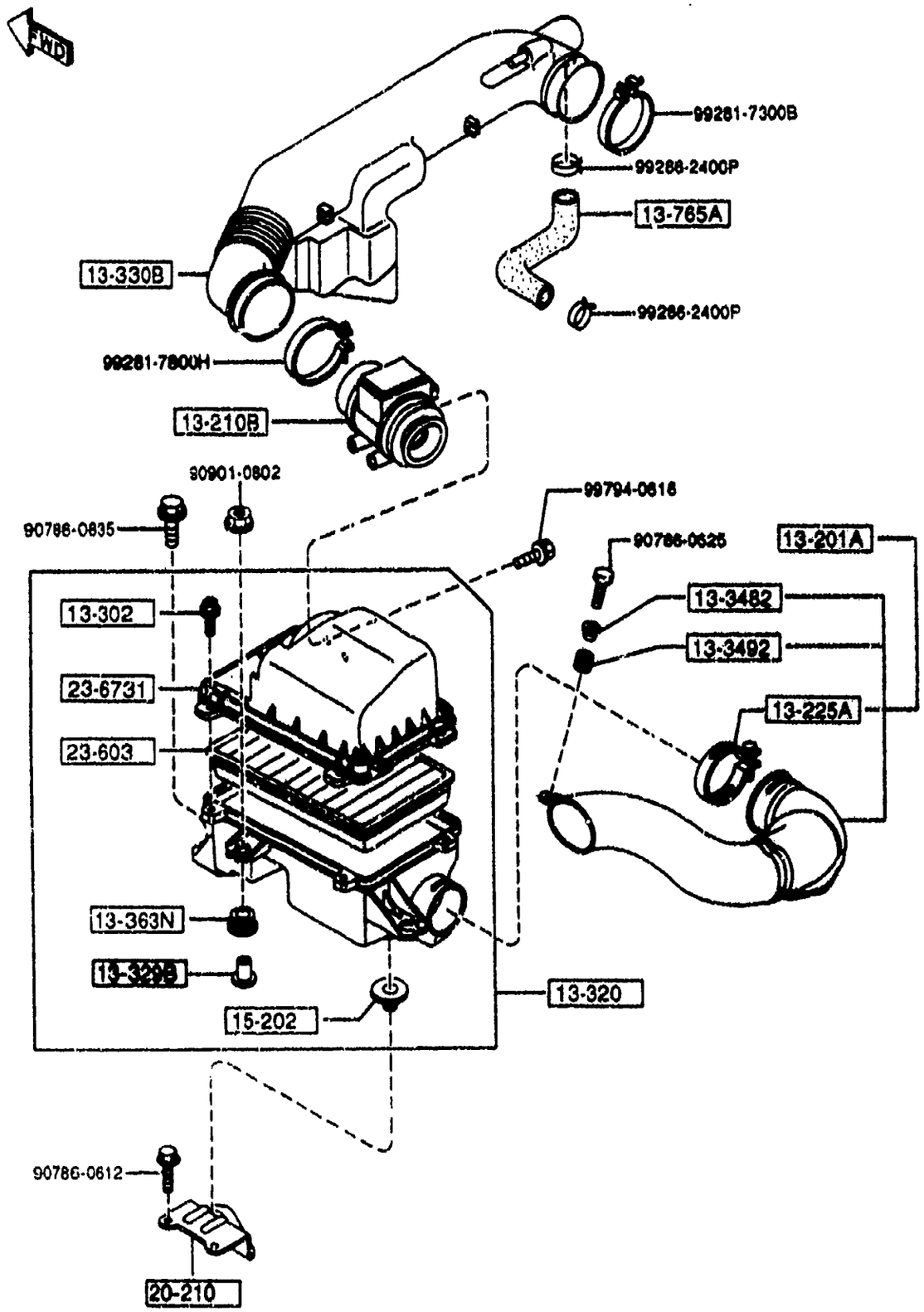

PART NO.	QTY	MODEL/RESTRICTION	MODEL/RESTRICTION	MODEL/RESTRICTION	FROM-TO
23-6731		COVER,AIR CLEANER			
BPE8-13-Z01	1				

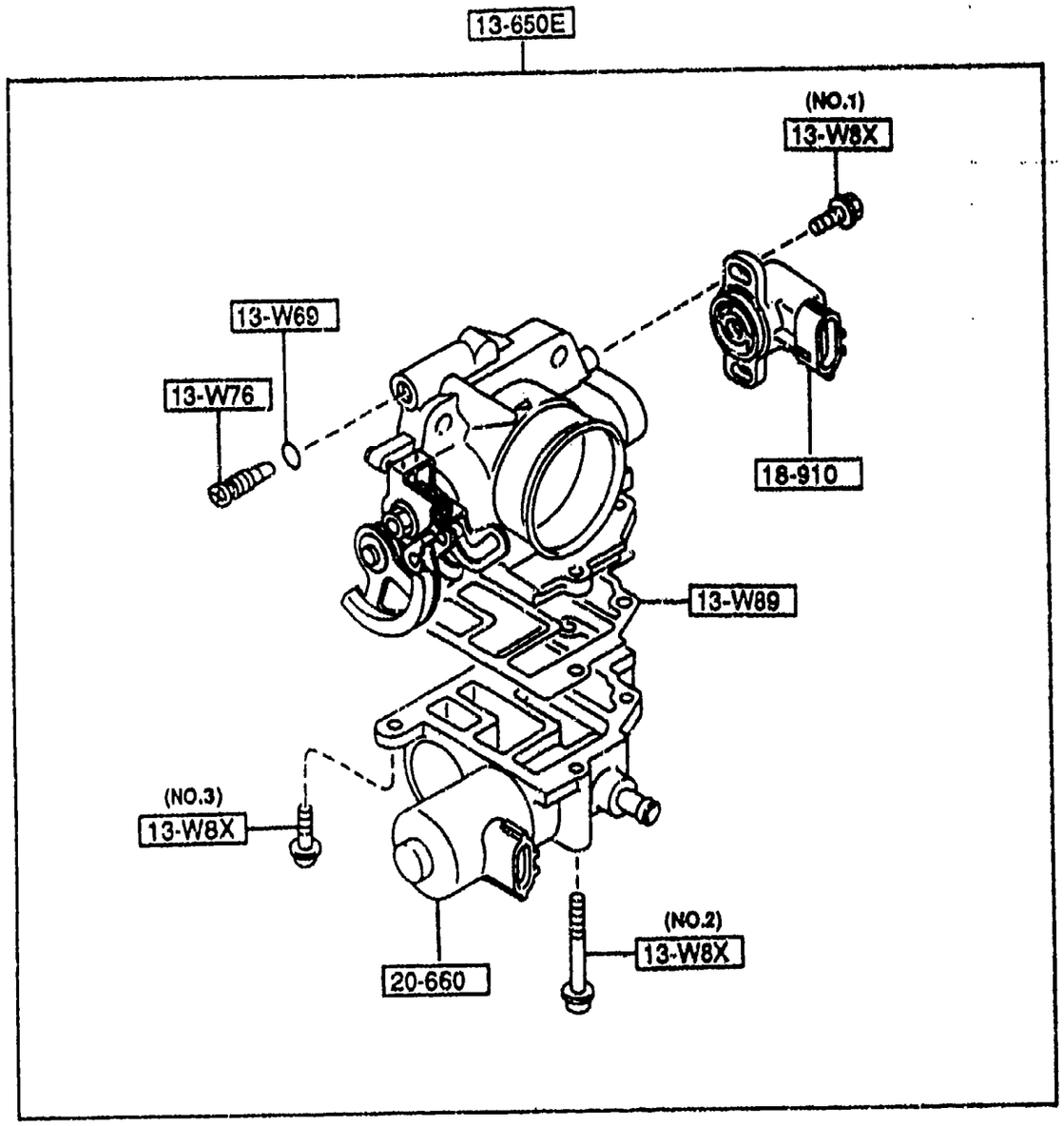

PART NO.	QTY	MODEL/RESTRICTION	MODEL/RESTRICTION	MODEL/RESTRICTION	FROM-TO
13-W69		RING,'O'			
K801-13-W69	1				
13-W76		SCREW,ID.ADJUST-TH. BODY			
K801-13-W76	1				
13-W8X		SCREW & WASHER SET			
B551-13-W8X	2	(ILLUST. NO.1)			
B6BF-13-W8X	2	(ILLUST. NO.2)			
K802-13-W8X	2	(ILLUST. NO.3)			
13-W89		GASKET,THERMO			
B6BF-13-W89	1				
13-650E		BODY,THROTTLE			
BPR5-13-640	1				
18-910		SENSOR,THROTTLE-CARB			
JE50-18-911	1				
20-660		VALVE,IDLE AIR CONTROL			
B6BF-20-660	1				

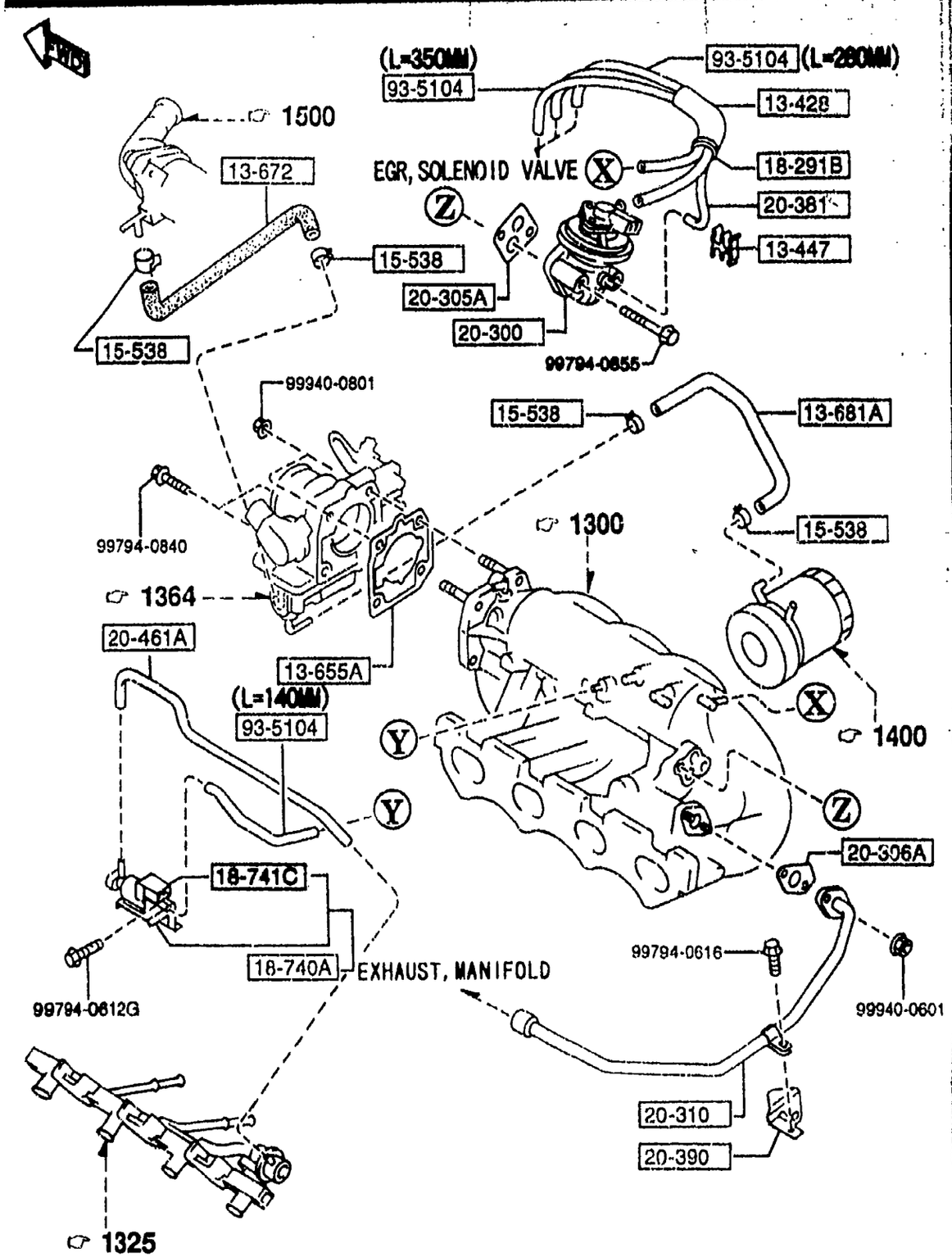

1370 -1 EMISSION CONTROL SYSTEM (INLET SIDE)

PART NO.	QTY	MODEL/RESTRICTION	MODEL/RESTRICTION	MODEL/RESTRICTION	FROM-TO
13-428		PROTECTOR			
BPS1-13-428A	1				
13-447		CLIP			
F801-13-447	1				
13-655A		GASKET			
B6BF-13-655	1				
13-672		HOSE,WATER			
BPE8-13-682	1				
13-681A		HOSE,WATER			
BPE8-13-681	1				
15-538		CLAMP,WATER HOSE			
B6BF-15-538	4				
18-291B		CLAMP,HOSE			
HE21-18-291	1				
18-740A		VALVE,SOLENOID			
B69N-18-740	1				
18-741C		VALVE,SOLENOID			
*FS05-18-741	1				
20-300		VALVE,E.G.R.			
B6BF-20-300	1				
20-305A		GASKET,E.G.R. VALVE			
JE27-20-305A	1				
20-306A		GASKET			
JE06-20-306	1				
20-310		PIPE,E.G.R.			
BPE8-20-310	1				
20-381		TUBE,VACUUM			
BPS1-20-381	1				

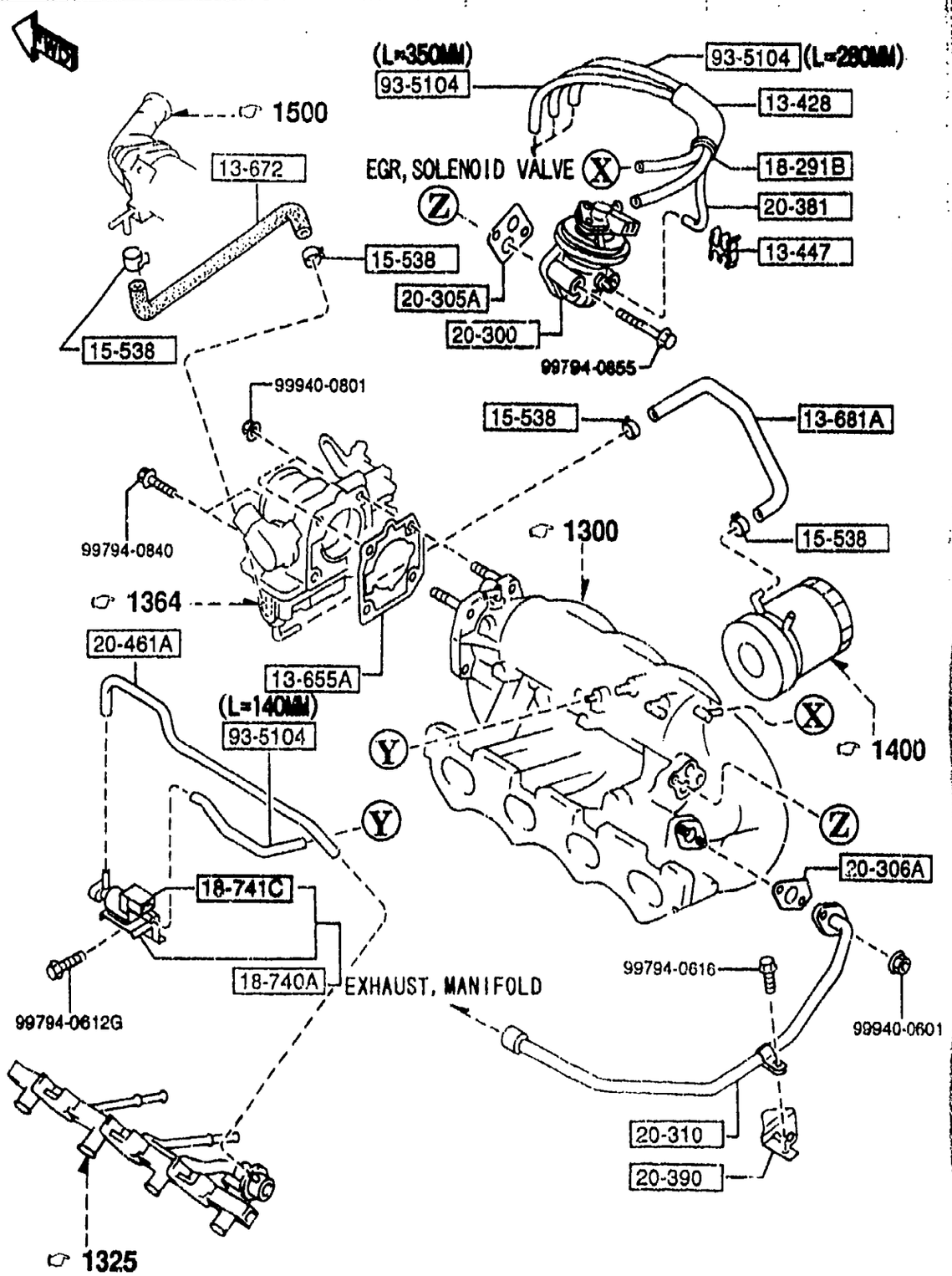

PART NO.	QTY	MODEL/RESTRICTION	MODEL/RESTRICTION	MODEL/RESTRICTION	FROM-TO
20-390		BRACKET,E.G.R.PIPE			
BPE8-20-390	1				
20-461A		TUBE,VACUUM			
BPE8-20-461	1				
93-5104		HOSE			
99351-04999	1	L=1M CUT IT TO USE			

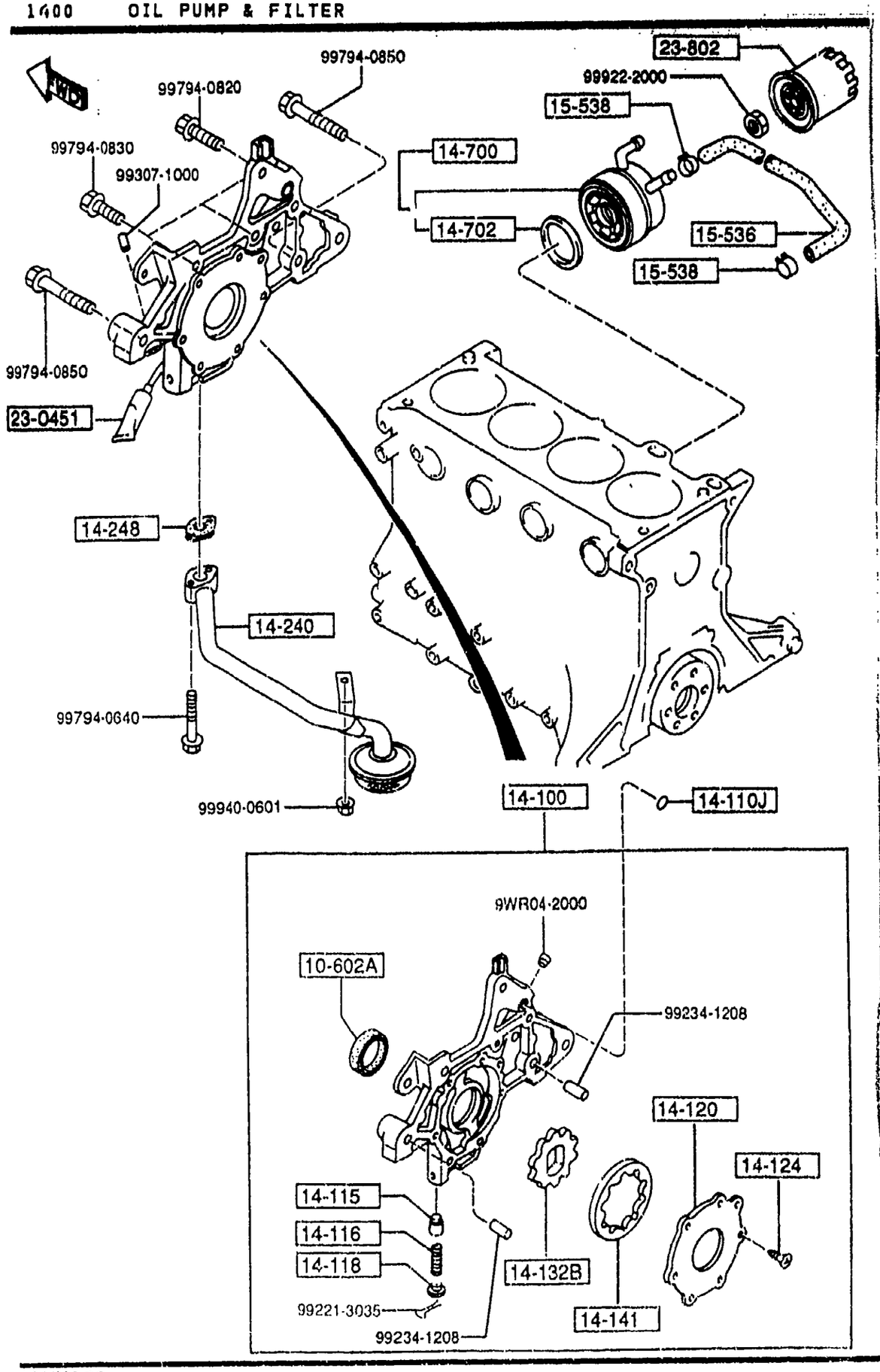

PART NO.	QTY	MODEL/RESTRICTION	MODEL/RESTRICTION	MODEL/RESTRICTION	FROM-TO
10-602A B3C7-10-602A	1	SEAL,OIL NON ASBESTOS			
14-100 B6S8-14-100H	1	PUMP,OIL			
14-110J FE1H-14-122A	1	RING,'O'			
14-115 FS01-14-115	1	PLUNGER,CONTROL			
14-116 0324-14-116B	1	SPRING,PRESSURE			
14-118 0222-14-118	1	SHEET,SPRING			
14-120 B6BF-14-121	1	COVER,OIL PUMP			
14-124 FE1H-14-124	7	SCREW,OIL PUMP COVER			
14-132B B6S7-14-132	1	GEAR,INNER			
14-141 B6S7-14-141	1	GEAR,OUTER			
14-240 BPE8-14-240	1	STRAINER,OIL			
14-248 B6BF-14-248	1	GASKET,OIL STRAINER			
14-700 BPE8-14-700	1	COOLER,OIL			
14-702		GASKET			

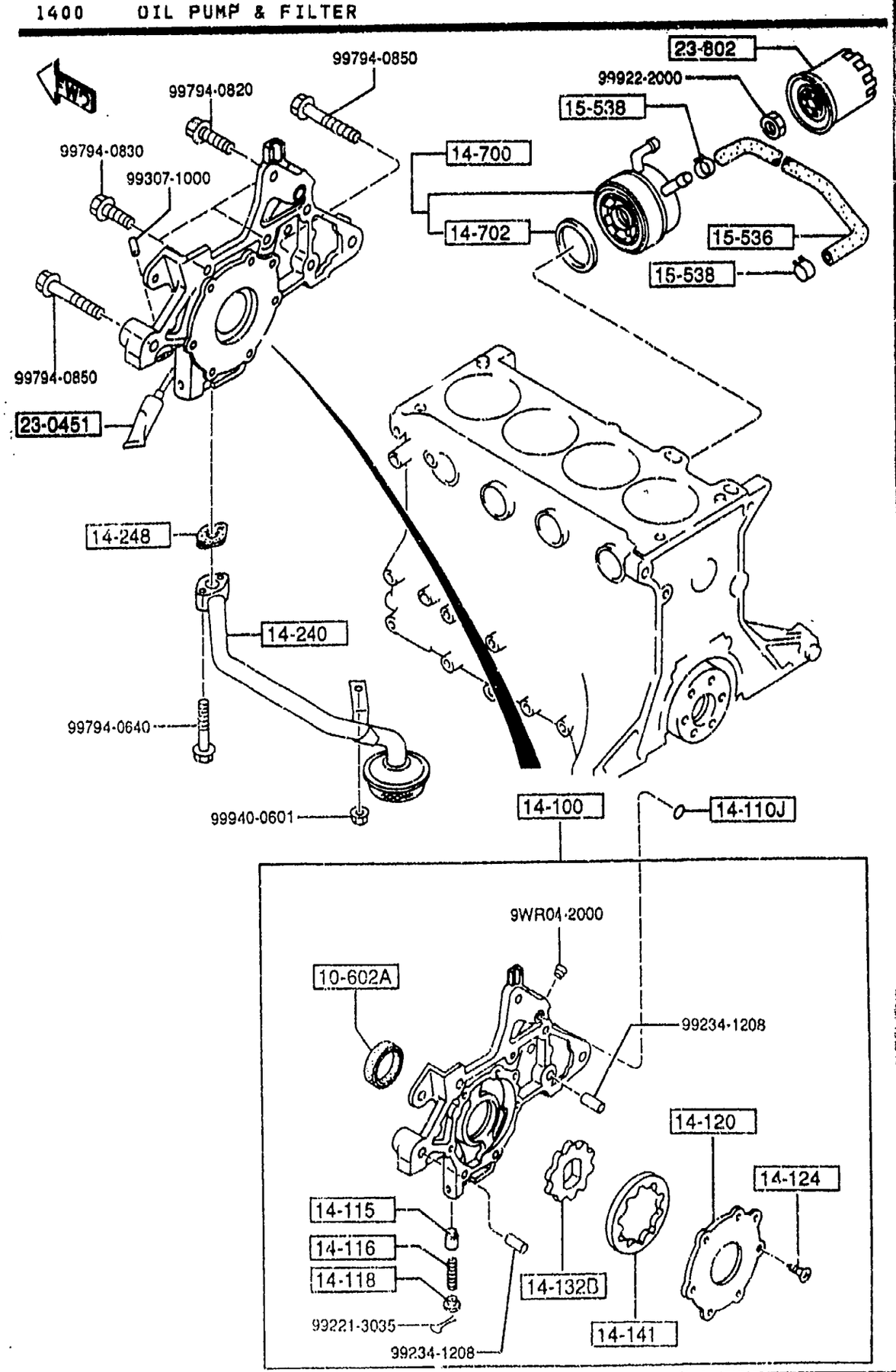

1400 -2 * OIL PUMP & FILTER

PART NO.	QTY	MODEL/RESTRICTION	MODEL/RESTRICTION	MODEL/RESTRICTION	FROM-TO
CONT'D					
KL01-14-702A	1				
+---------+					
| 15-536 |		HOSE,WATER-OIL COOLE			
+---------+		R IN.			
BPE8-15-536	1				
+---------+					
| 15-538 |		CLAMP,WATER HOSE			
+---------+					
B6BF-15-538	2				
+---------+					
| 23-0451 |		TUBE,SILICON			
+---------+					
*8527-77-739	1				
+---------+					
| 23-802 |		CARTRIDGE,OIL FILTER			
+---------+					
B6Y1-14-302A	1	(MAZDA MARK T.ROKI)			

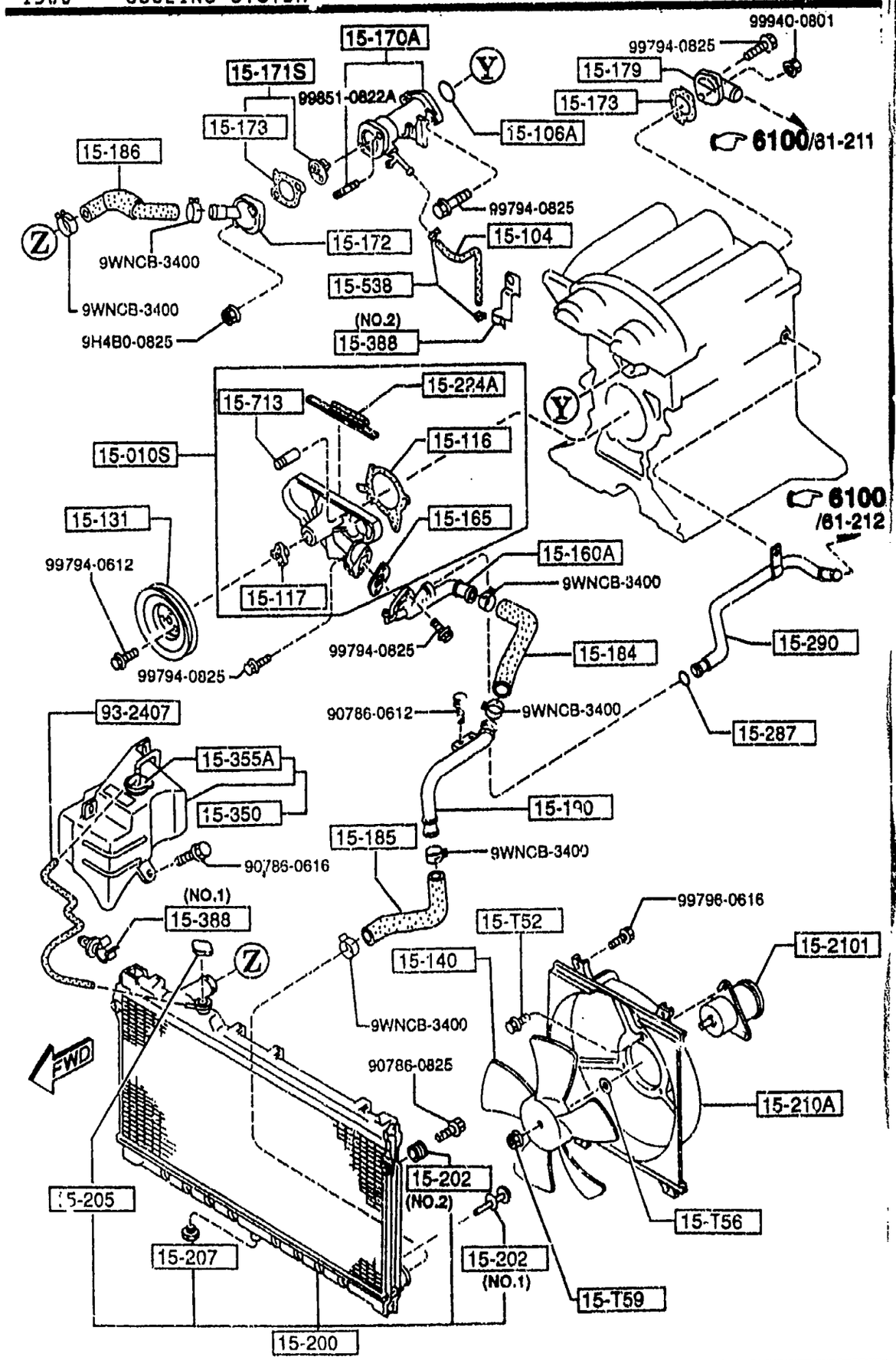

1500 -1 COOLING SYSTEM

PART NO.	QTY	MODEL/RESTRICTION	MODEL/RESTRICTION	MODEL/RESTRICTION	FROM-TO
15-T52		SCREW,MOTOR-ELECTRIC FAN			
B6S8-15-T52	3				
15-T56		WASHER,MOUNT.-FAN			
B61P-15-T56	1				
15-T59		NUT,COOLING FAN			
B595-15-T59	1				
15-010S		PUMP SET,WATER			
BA8B-15-010A	1				
15-104		HOSE,WATER BY-PASS			
B61P-15-261A	1				
15-106A		RING,'O'-WATER PUMP			
B61P-15-106	1				
15-116		GASKET,WATER PUMP			
B6BF-15-116	1				
15-117		BOSS,W.PUMP PULLEY			
E301-15-117	1				
15-131		PULLEY,WATER PUMP			
B3C7-15-131	1				
15-140		FAN,COOLING			
B61P-15-140A	1	(MT)			
B64J-15-140	1	CALSONIC (AT)			-7201
B61P-15-140A	1	(AT)			7201-
15-160A		INLET,WATER PUMP			
B61P-15-160	1				
15-165		GASKET,W.PUMP INLET			
B621-15-165	1	NON ASBESTOS			
15-170A		COVER,THERMO			

7201 NA35*V-730033

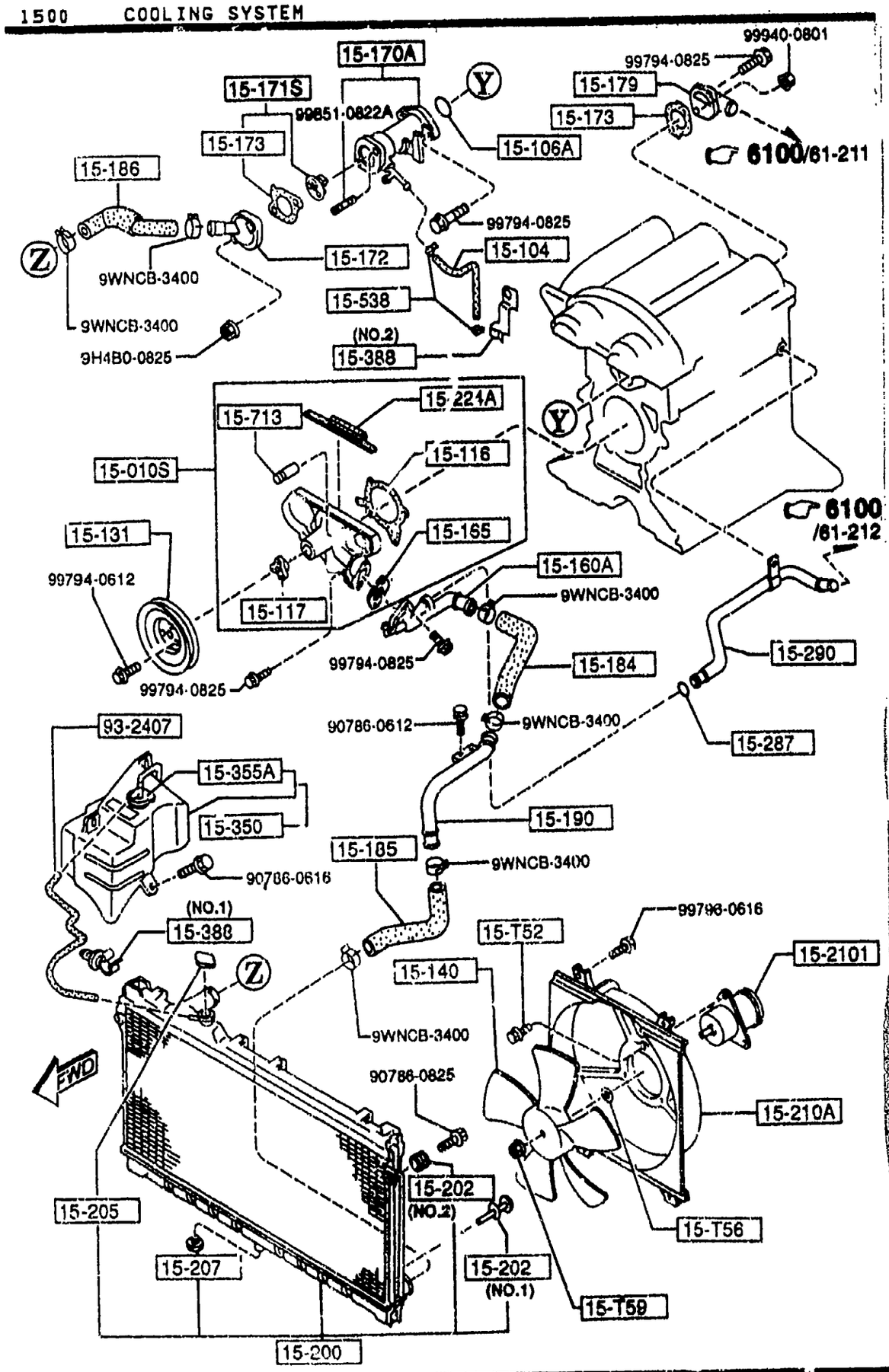

PART NO.	QTY	MODEL/RESTRICTION	MODEL/RESTRICTION	MODEL/RESTRICTION	FROM-TO
CONT'D					
BPE8-15-170A	1				
15-171S		THERMOSTAT SET			
8AB8-15-171	1				
15-172		COVER,THERMOSTAT			
BPE8-15-172	1				
15-173		GASKET,THERMOSTAT COVER			
B621-15-173	2	NON ASBESTOS			
15-179		OUTLET,WATER			
BPE8-15-179	1				
15-184		HOSE,WATER			
B61P-15-184	1				
15-185		HOSE,WATER			
BPE8-15-185	1				
15-186		HOSE,WATER			
BPE8-15-186	1				
15-190		PIPE,WATER			
B61P-15-190	1				
15-200		RADIATOR			
BPE8-15-200	1	(MT)			
BPE9-15-200	1	(AT)			
15-202		RUBBER,MOUNT			
B61P-15-202	2	(ILLUST. NO.1)			
N326-15-202	2	(ILLUST. NO.2)			
15-205		CAP,RADIATOR			
D316-15-205	1	CALSONIC			
15-207		COCK,DRAIN			
NF01-15-203	1	CALSONIC			

1500 COOLING SYSTEM

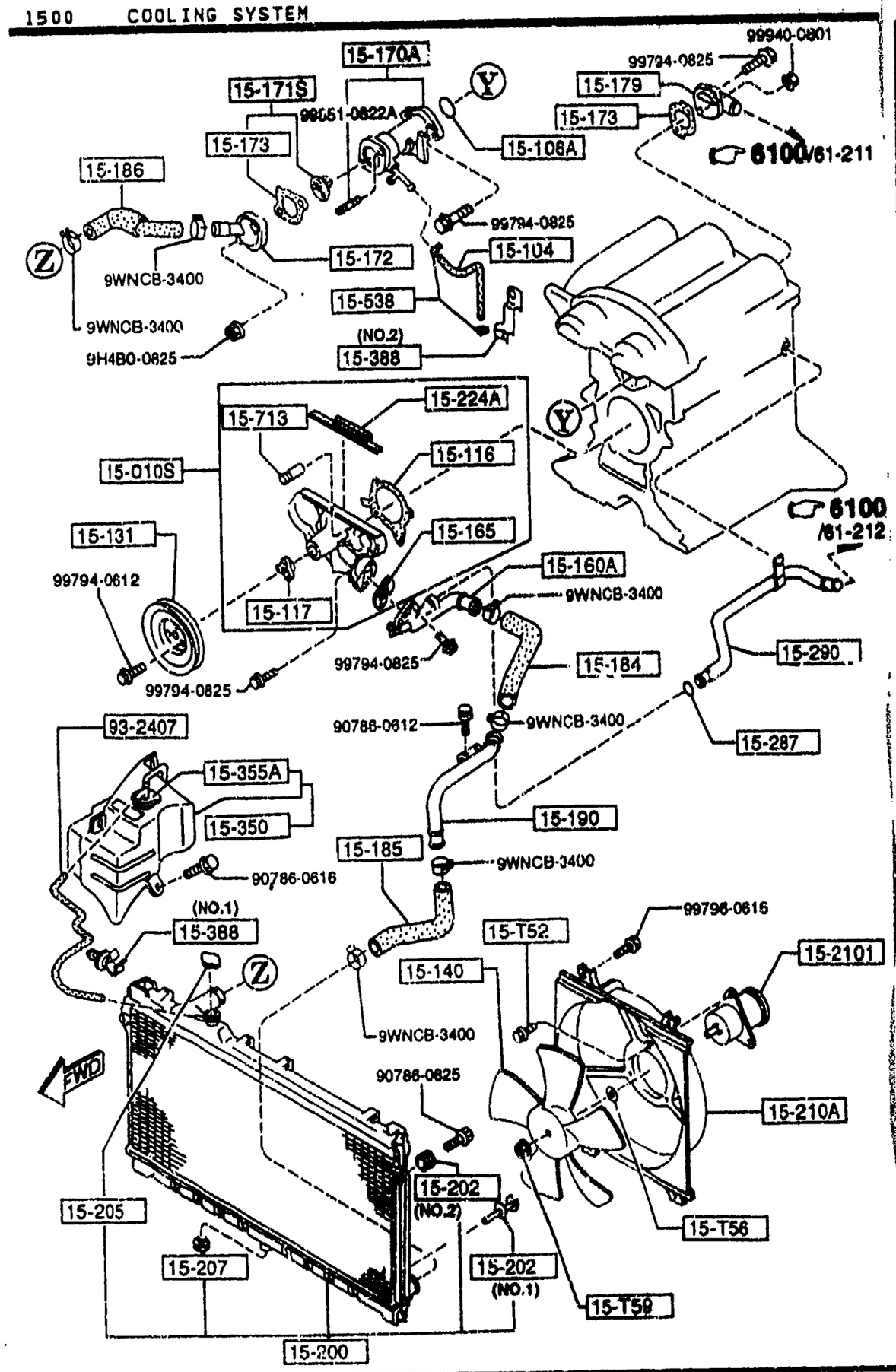

PART NO.	QTY	MODEL/RESTRICTION	MODEL/RESTRICTION	MODEL/RESTRICTION	FROM-TO
15-210A		COWLING,RADIATOR			
B61P-15-210B	1				
15-2101		FAN DRIVE			
B61P-15-150B	1	(MT)			
R64J-15-150A	1	(AT)			-7201
B61P-15-150B	1	(AT)			7201-
15-224A		RUBBER,SEAL			
B660-10-543B	1				
15-287		RING,'O'-WATER BYPASS			
E301-15-287	1				
15-290		PIPE,BYPASS			
BPE8-15-290	1				
15-350		TANK,SUB-RADIATOR			
B61P-15-350D	1				
15-355A		CAP,SUB TANK			
B61P-15-355A	1				
15-388		CLIP,HOSE-SUB T.& WATER H			
F201-15-388A	1	(ILLUST. NO.1)			
B61P-15-[illegible]47	1	(ILLUST. NO.2)			
15-[illegible]38		CLAMP,WATER HOSE			
B6BF-15-538	2				
15-713		SET PIN,SPRING			
F801-15-713	1				
93-2407		HOSE,WATER			
99324-07610	1				

7201 NA35*V-730033

(W/O POWER STEERING)

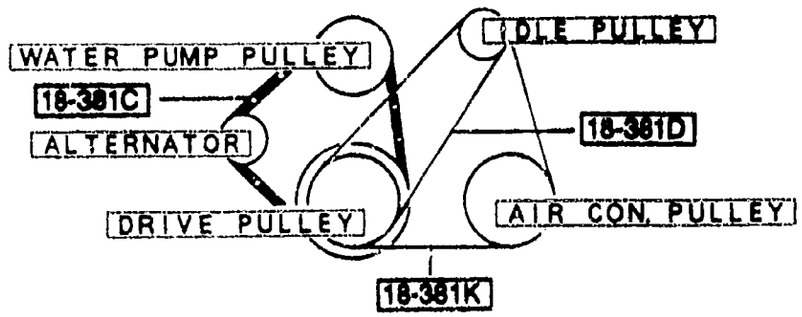

(W/POWER STEERING)

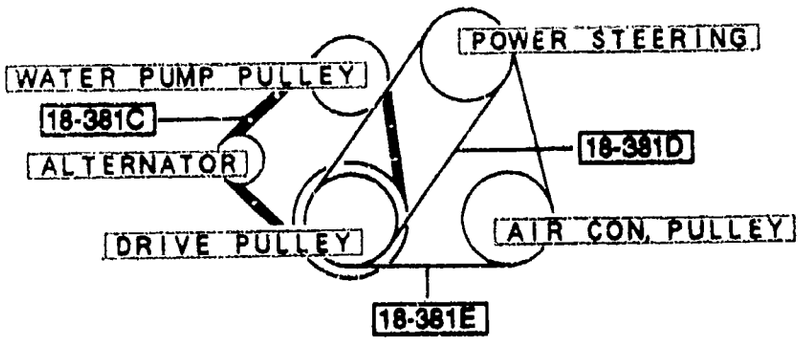

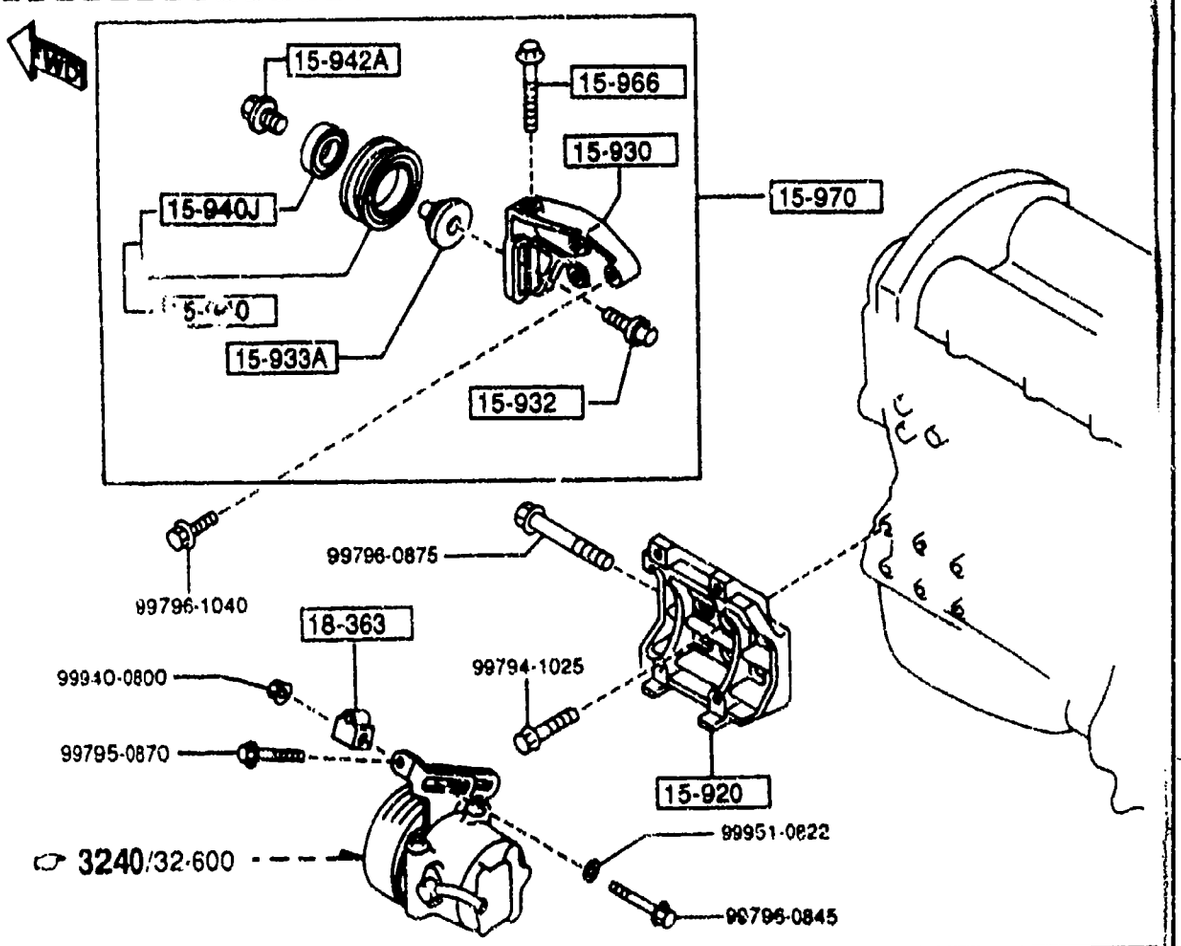

1580 -1 BRACKET, PULLEY & BELT

PART NO.	QTY	MODEL/RESTRICTION	MODEL/RESTRICTION	MODEL/RESTRICTION	FROM-TO
15-920		BRACKET,COMPRESSOR			
BPE8-15-810A	1	(A) (W/AIR CON.)			
15-930		BRACKET,IDLE PULLEY			
BP01-15-951	1	(A) (W/AIR CON.+W/O POWER STEERING)			
15-932		SHAFT,PULLEY			
B631-15-932	1	(A) (W/AIR CON.+W/O POWER STEERING)			
15-933A		COLLAR			
BP01-15-933	1	(A) (W/AIR CON.+W/O POWER STEERING)			
15-940		PULLEY,IDLE			
BP01-15-940	1	(A) (W/AIR CON.+W/O POWER STEERING)			
15-940J		BEARING			
99606-83020	1	(W/AIR CON.+W/O POWER STEERING)			
15-942A		COLLAR			
E564-15-942	1	(A) (W/AIR CON.+W/O POWER STEERING)			
15-966		BOLT,ADJUST			
E564-15-934	1	(A) (W/AIR CON.+W/O POWER STEERING)			
15-970		PULLEY,IDLE			
BP01-15-930	1	(A) (W/AIR CON.+W/O POWER STEERING)			
18-363		SPACER,STRAP			
FP02-18-363	1	(W/O AIR CON.+W/POWER STEERING)			

(W/O POWER STEERING)

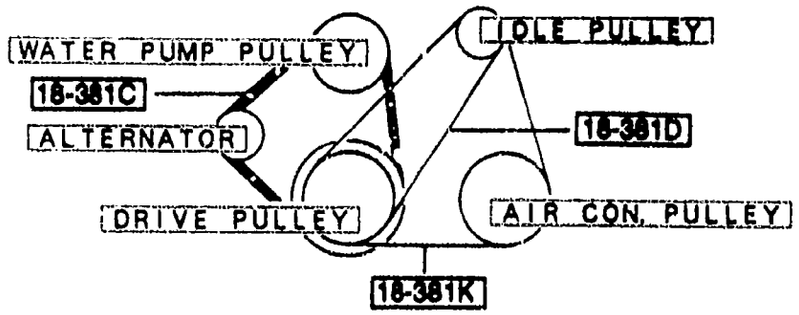

(W/POWER STEERING)

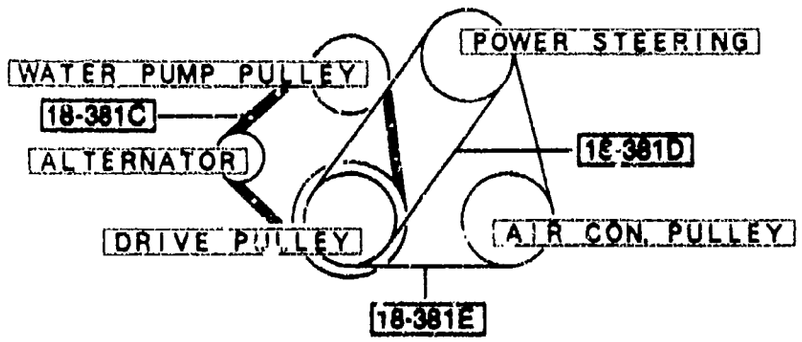

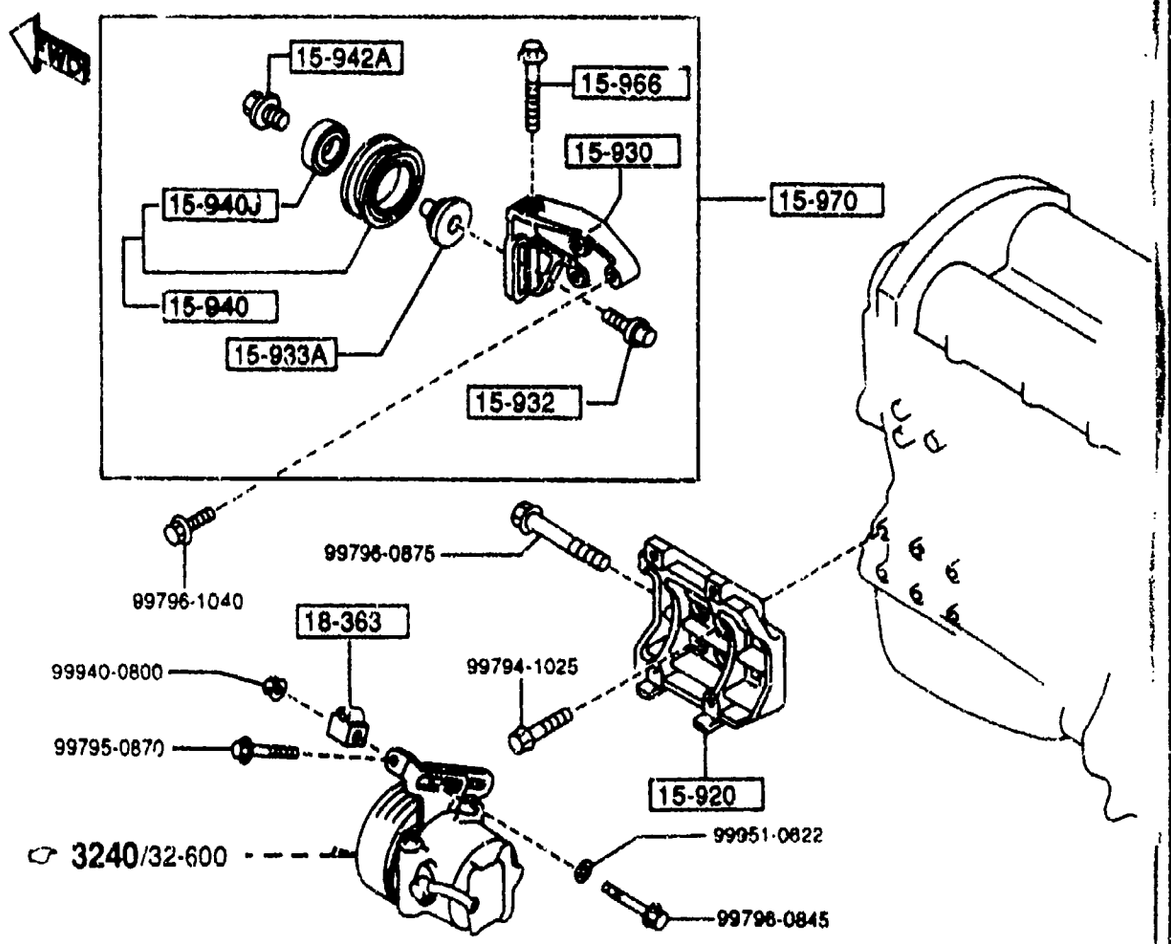

AUNA06

1580 -2 * BRACKET, PULLEY & BELT

PART NO.	QTY	MODEL/RESTRICTION	MODEL/RESTRICTION	MODEL/RESTRICTION	FROM-TO
+---------+ | 18-381C | +---------+		BELT'V',W/PUMP&ALTERNATOR			
*B6BF-18-381	1	4PK L=885 BANDO			
*B596-18-381	1	4PK L=885 GOOD YEAR			-6801
+---------+ | 18-381D | +---------+		BELT'V',POWER STEERING			
*B61P-15-907A	1	4PK-855 MITSUBOSHI (W/O AIR CON.+W/POWER STEERING)			
+---------+ | 18-381E | +---------+		BELT'V',P/STG. & AIR CON.			
*BPE8-15-909 A (BPE8-15-909A)	1	(E) GOODYEAR 4PK940 (W/AIR CON.+W/POWER STEERING)			-7924
*BPF3-15-909 A (BPF3-15-909A)	1	(A) 4PK L=940MM BANDO (W/AIR CON.+W/POWER STEERING)			-7924
*BPE8-15-909A	1	(E) GOODYEAR 4PK940 (W/AIR CON.+W/POWER STEERING)			7924-
*BPF3-15-909A	1	(A) 4PK L=940MM BANDO (W/AIR CON.+W/POWER STEERING)			7924-
+---------+ | 18-381K | +---------+		BELT'V',AIR CON.			
*B3C7-15-907C	1	4PK L=848MM (W/AIR CON.+W/O POWER STEERING)			
*BPE8-15-908	1	(E) GOODYEAR 4PK848 (W/AIR CON.+W/O POWER STEERING)			

6801 NA35*V-719630
7924 NA35*V-739048

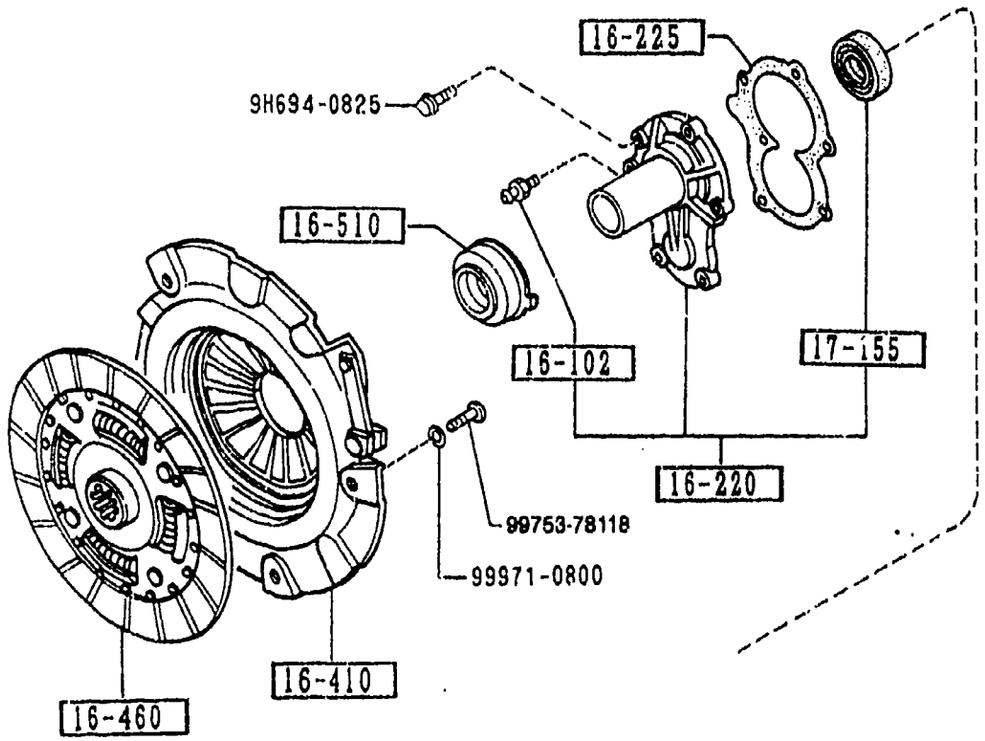

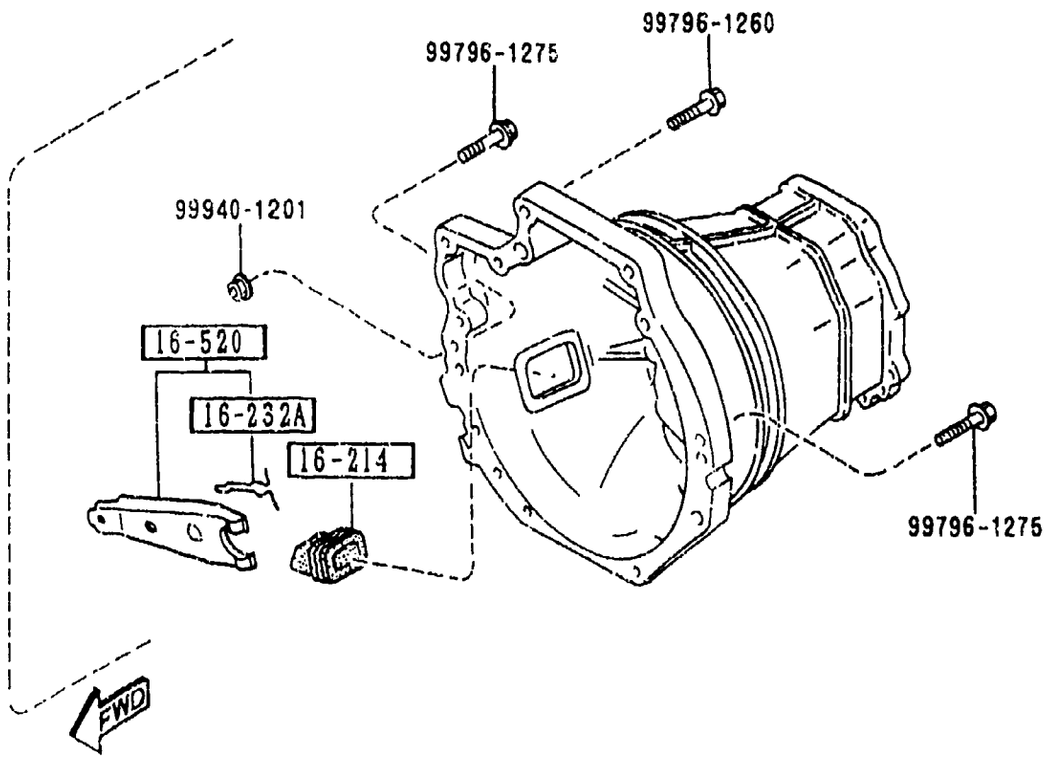

1600 -1 * CLUTCH DISC & COVER

PART NO.	QTY	MODEL/RESTRICTION	MODEL/RESTRICTION	MODEL/RESTRICTION	FROM-TO
16-102		PIN,PIVOT-CLUTCH REL .FORK			
0603-16-102B	1				-7722
*FE69-16-102A	1				7722-
16-214		COVER,DUST-CLUTCH FO RK			
FE51-16-214A	1				
16-220		COVER,FRONT CLUTCH			
B622-16-220A	1				-7722
*B626-16-220	1				7722-
16-225		GASKET,FRONT COVER			
FE50-16-225A	1				
16-232A		SUPPORTER,FORK			
1416-16-232A	1				
16-410		COVER,CLUTCH			
BP07-16-410	1				
16-460		DISC,CLUTCH			
BP07-16-460	1				
16-510		COLLAR,CLUTCH REL.			
B622-16-510	1				
16-520		FORK,CLUTCH RELEASE			
B622-16-520 A (B622-16-520A)	1				-7722
*B622-16-520A	1				7722-
17-155		SEAL,OIL			
H501-17-103	1				

7722 NA35*V-738852

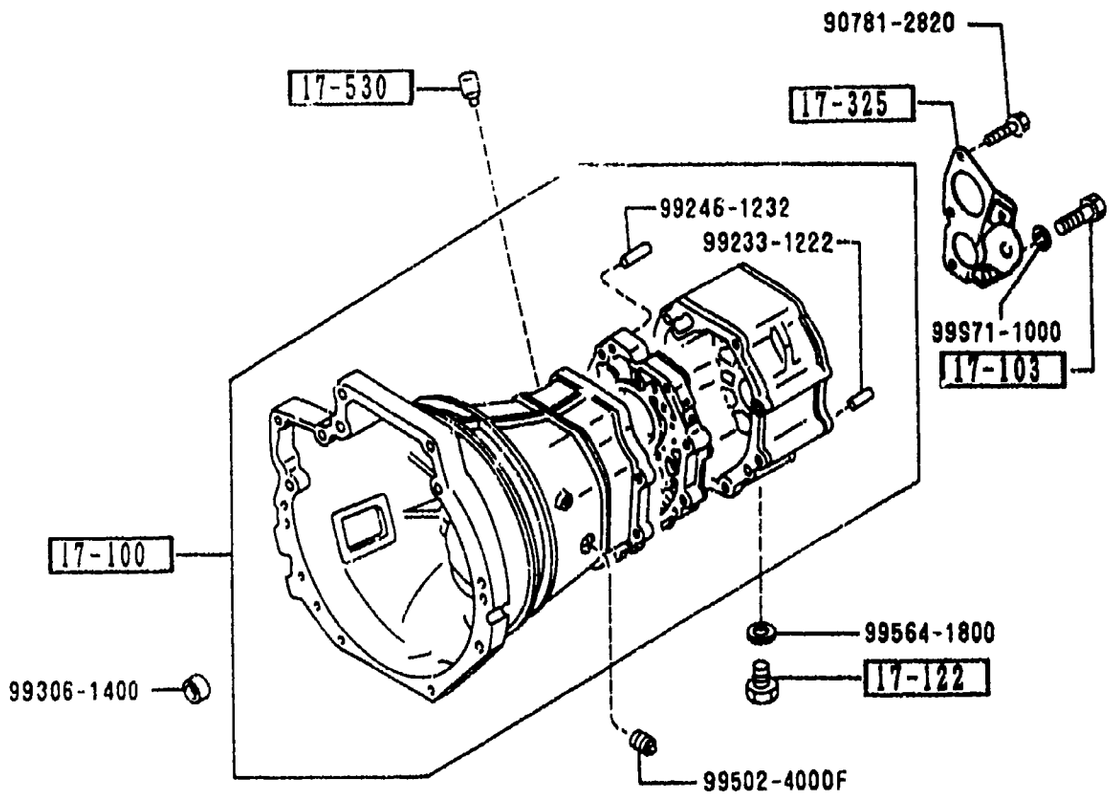

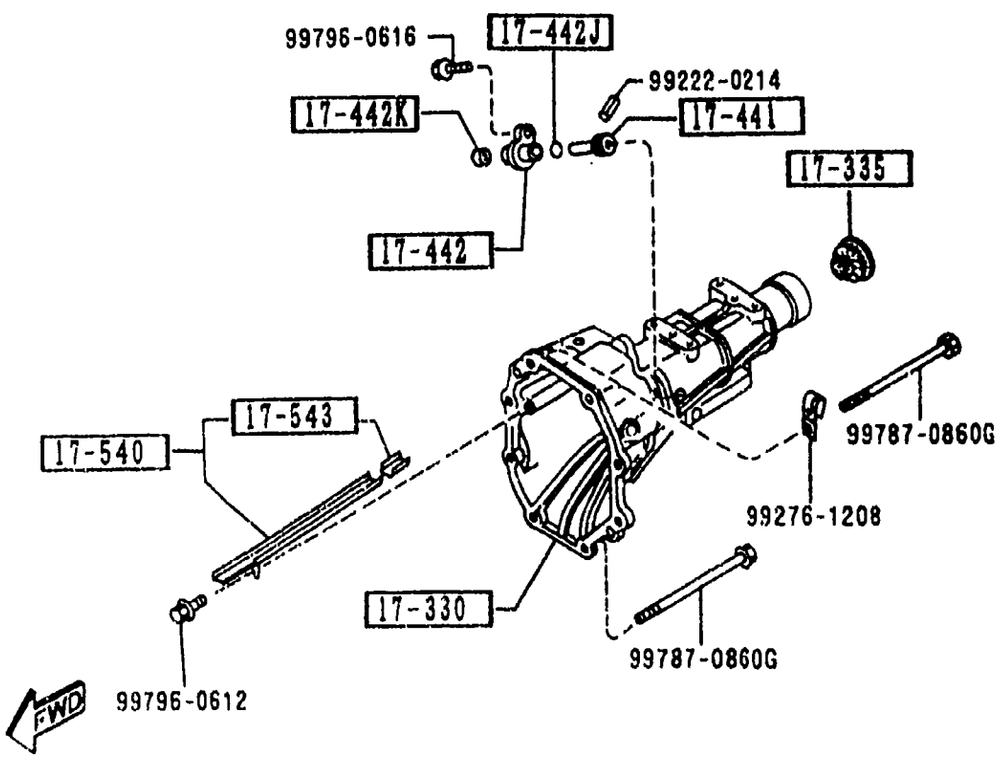

1700 -1 MANUAL TRANSMISSION CASE

PART NO.	QTY	MODEL/RESTRICTION	MODEL/RESTRICTION	MODEL/RESTRICTION	FROM-TO
17-100		CASE,T/MISSION			
M526-17-100A (M526-17-10XA)	1				-7722
*M526-17-10XA A (M526-17-10XB)	1				7722-7818
*M526-17-10XB	1				7818-
17-103		BOLT			
M501-17-103	2				
17-122		PLUG,MAGNET			
0810-17-121	1				
17-325		COVER,BEARING			
M501-17-370A	1				
17-330		HOUSING,EXTENSION			
M5Y1-17-330	1				
17-335		SEAL,OIL			
M507-17-335A	1				
17-441		GEAR,DRIVEN			
M510-17-441	1	N=22			
17-442		SLEEVE,SPEEDOMETER			
1669-17-442B	1				
17-442J		RING,'O'			
1011-17-443	1				
17-442K		SEAL,OIL			
99586-08166	1				
17-530		BREATHER,AIR-T/MISSI ON			
0884-17-530	1				
17-540		PASS,OIL			
M509-17-540	1				

7722 NA35*V-738852
7818 NA35*V-739032

1700 MANUAL TRANSMISSION CASE

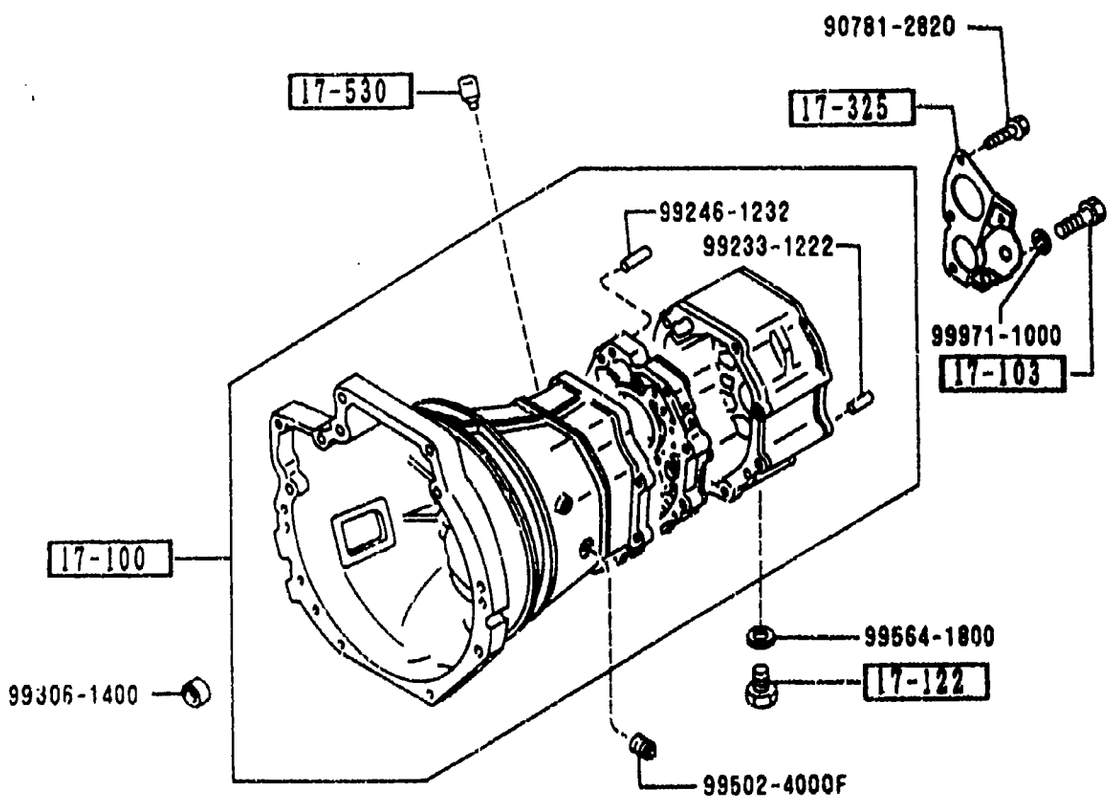

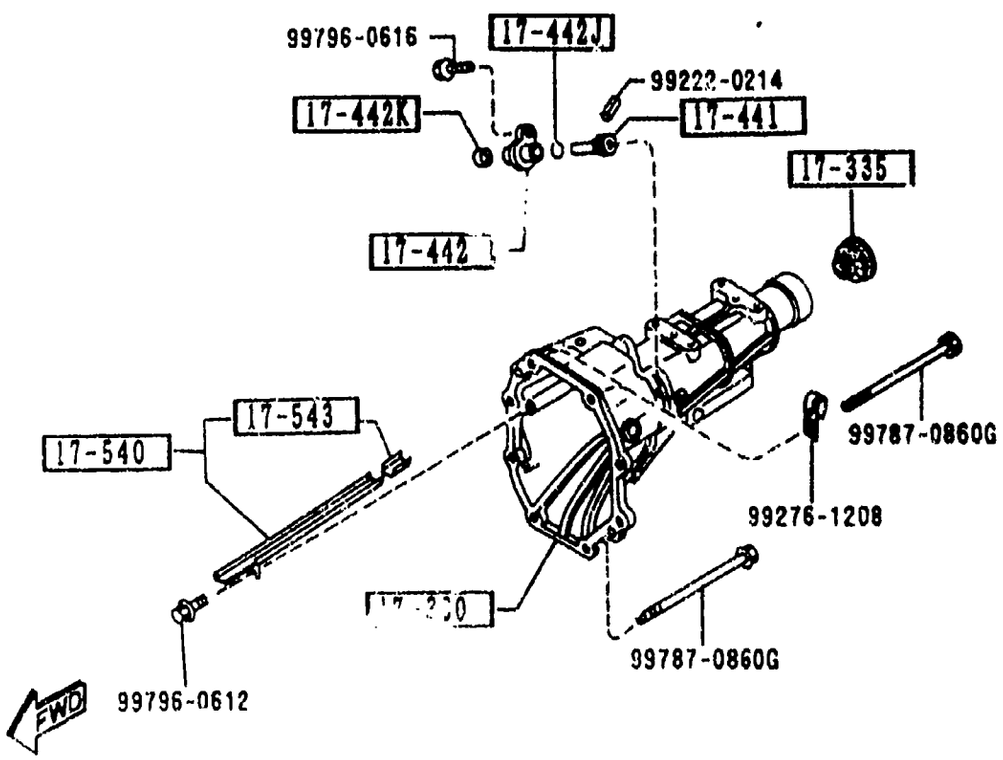

PART NO.	QTY	MODEL/RESTRICTION	MODEL/RESTRICTION	MODEL/RESTRICTION	FROM-TO
+---------+ | 17-543 | +---------+ M501-17-543A	1	RUBBER,SEAL SUMINO INDUSTRY			

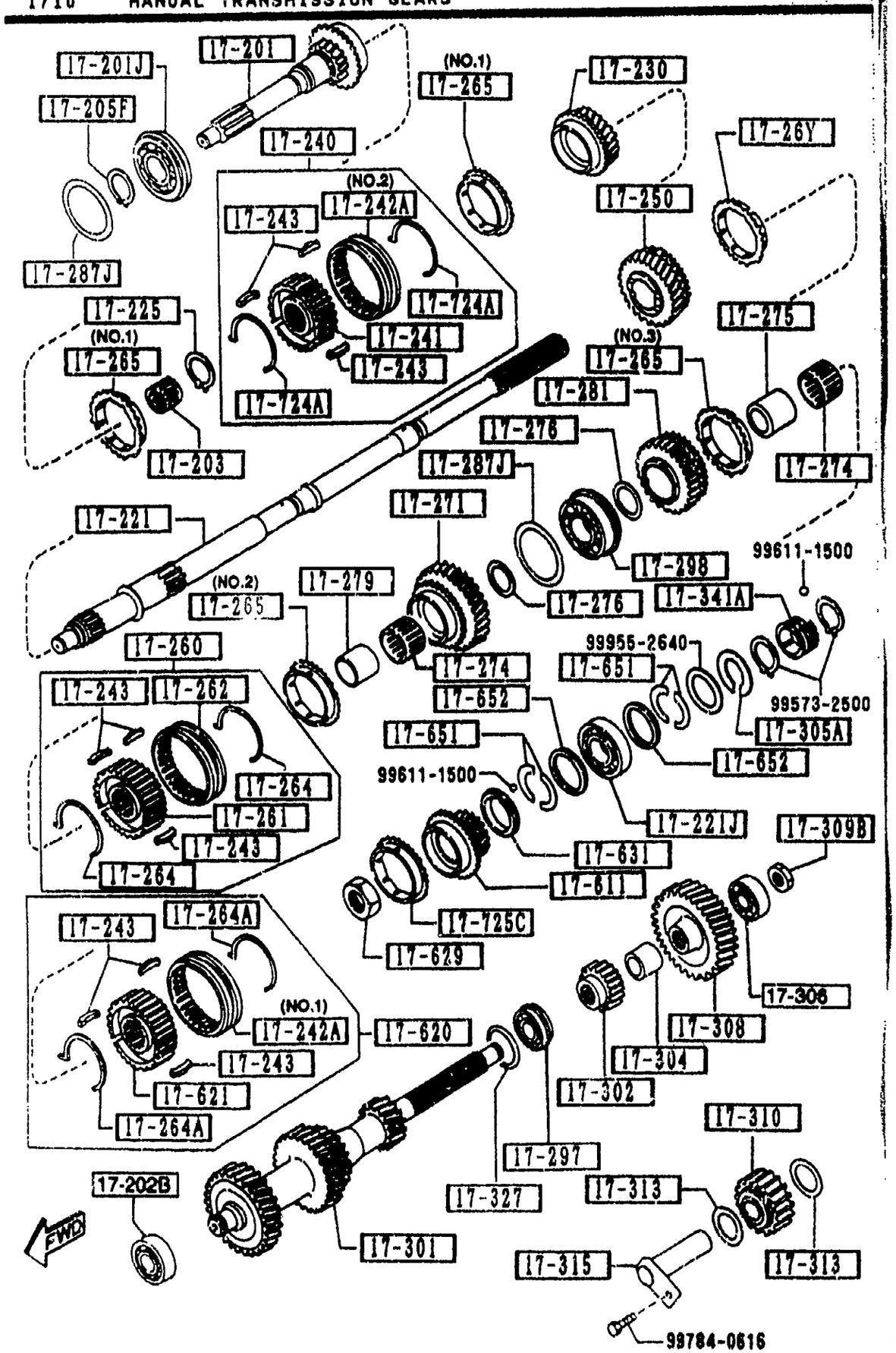

PART NO.	QTY	MODEL/RESTRICTION	MODEL/RESTRICTION	MODEL/RESTRICTION	FROM-TO
17-201		GEAR,MAIN DRIVE			
M516-17-201	1				
17-201J		BEARING,BALL-MAIN DRIVE GEAR			
M502-17-295C	1				
17-202B		BEARING,BALL			
*M502-17-297A	1				-7801
*F520-17-171B	1				7801-
17-203		BEARING,NEEDLE			
M501-17-210A	1				
17-205F		RING,RETAINING			
M501-17-205	1				
17-221		SHAFT,MAIN			
M505-17-221B	1				
17-221J		BEARING,BALL			
99606-63053	1				
17-225		RING,SNAP			
0317-17-225	1				
17-230		GEAR,3RD			
M513-17-231B AN(M513-17-231C)	1				-6C01
M513-17-231C	1				6C01-
17-240		HUB SET,CLUTCH-3RD & 4TH			
M517-17-240	1				
17-241		HUB,CLUTCH			
M501-17-241C	1				
17-242A		SLEEVE,CLUTCH HUB			
F401-17-242A	1	(ILLUST. NO.1)			
M502-17-242	1	(ILLUST. NO.2)			

6C01 NA35*V-725591
7801 NA35*V-739024

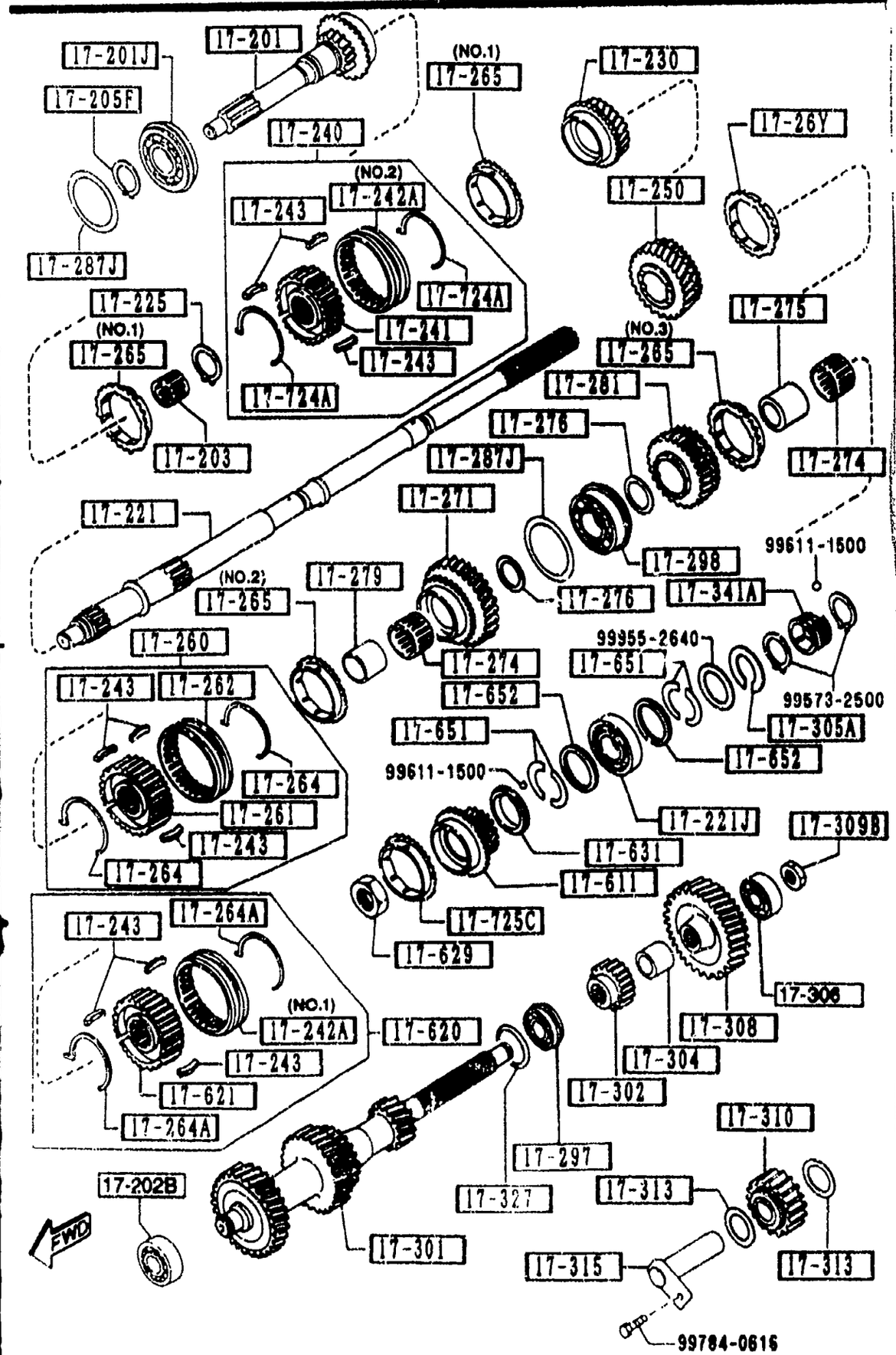

PART NO.	QTY	MODEL/RESTRICTION	MODEL/RESTRICTION	MODEL/RESTRICTION	FROM-TO
17-243		KEY,SYNCHRONIZER			
F401-17-243A	9				-6A01
AN(F401-17-243C)					
F401-17-243C	9				6A01-
17-250		GEAR,2ND			
M520-17-251A	1				
17-26Y		RING,SYNCHRONIZER			
R504-17-26Y	1				
17-260		HUB SET,CLUTCH-1ST & 2ND			
M517-17-260	1				
17-261		HUB,CLUTCH			
M511-17-261	1				
17-262		SLEEVE,CLUTCH HUB			
M505-17-262	1				
17-264		SPRING,SYNCHRO. KEY			
G401-17-264	2				
17-264A		SPRING,SYNCHRONIZER			
F401-17-264A	2				
17-265		RING,SYNCHRONIZER			
G501-17-265A	2	(ILLUST. NO.1)			
M502-17-265C	1	(ILLUST. NO.2)			
M504-17-265A	1	(ILLUST. NO.3)			
17-271		GEAR,1ST			
M516-17-271A	1				
17-274		BEARING,NEEDLE			
4069-17-283A	2				
17-275		RACE,INNER			
4069-17-284E	1				

6A01 NA35*V-720311

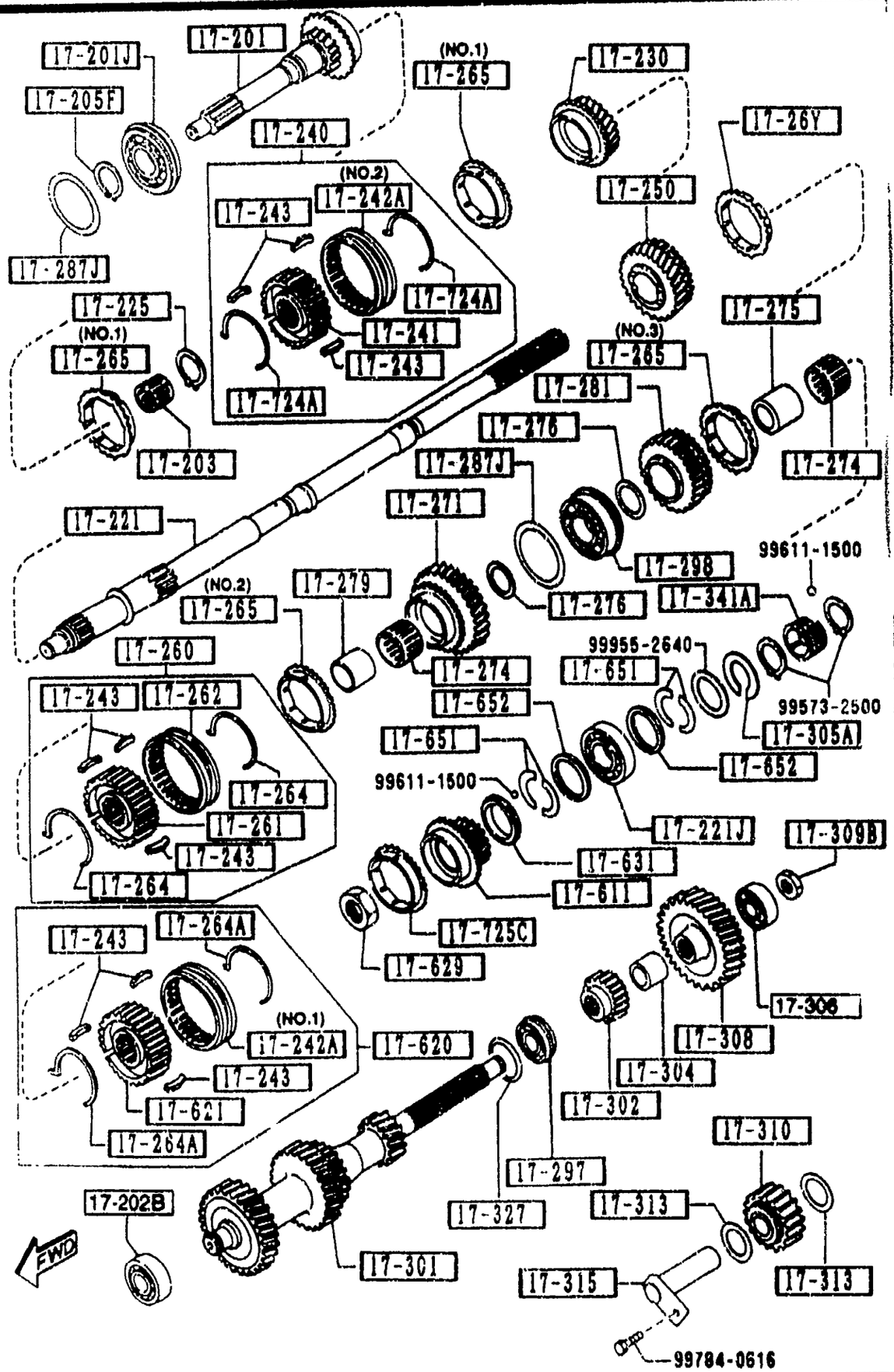

PART NO	QTY	MODEL/RESTRICTION	MODEL/RESTRICTION	MODEL/RESTRICTION	FROM-TO
17-276		WASHER,THRUST			
0259-17-274A	2	T=3.0MM			
0259-17-276	2	T=2.2MM			
0259-17-277	2	T=2.7MM			
0259-17-278	2	T=3.2MM			
0259-17-279	2	T=3.7MM			
17-279		SLEEVE,GEAR			
8540-17-275A	1				
17-281		GEAR,REVERSE			
M513-17-281	1				
17-287J		SHIM,ADJUST			
99963-6310	2	T=0.1MM			-7721
99963-6315	1	T=0.15MM			-7721
99963-6330	2	T=0.3MM			-7721
*99963-6310	4	T=0.1MM			7721-
*99963-6330	3	T=0.3MM			7721-
17-297		BEARING,BALL-COUNTER SHAFT G.			
M506-17-297	1				
17-298		BEARING			
M502-17-298A	1				
17-301		GEAR,COUNTER SHAFT			
M528-17-301A	1				
17-302		GEAR,COUNTER REVERSE			
M516-17-302	1				
17-304		SPACER			

7721 NA35*V-730834

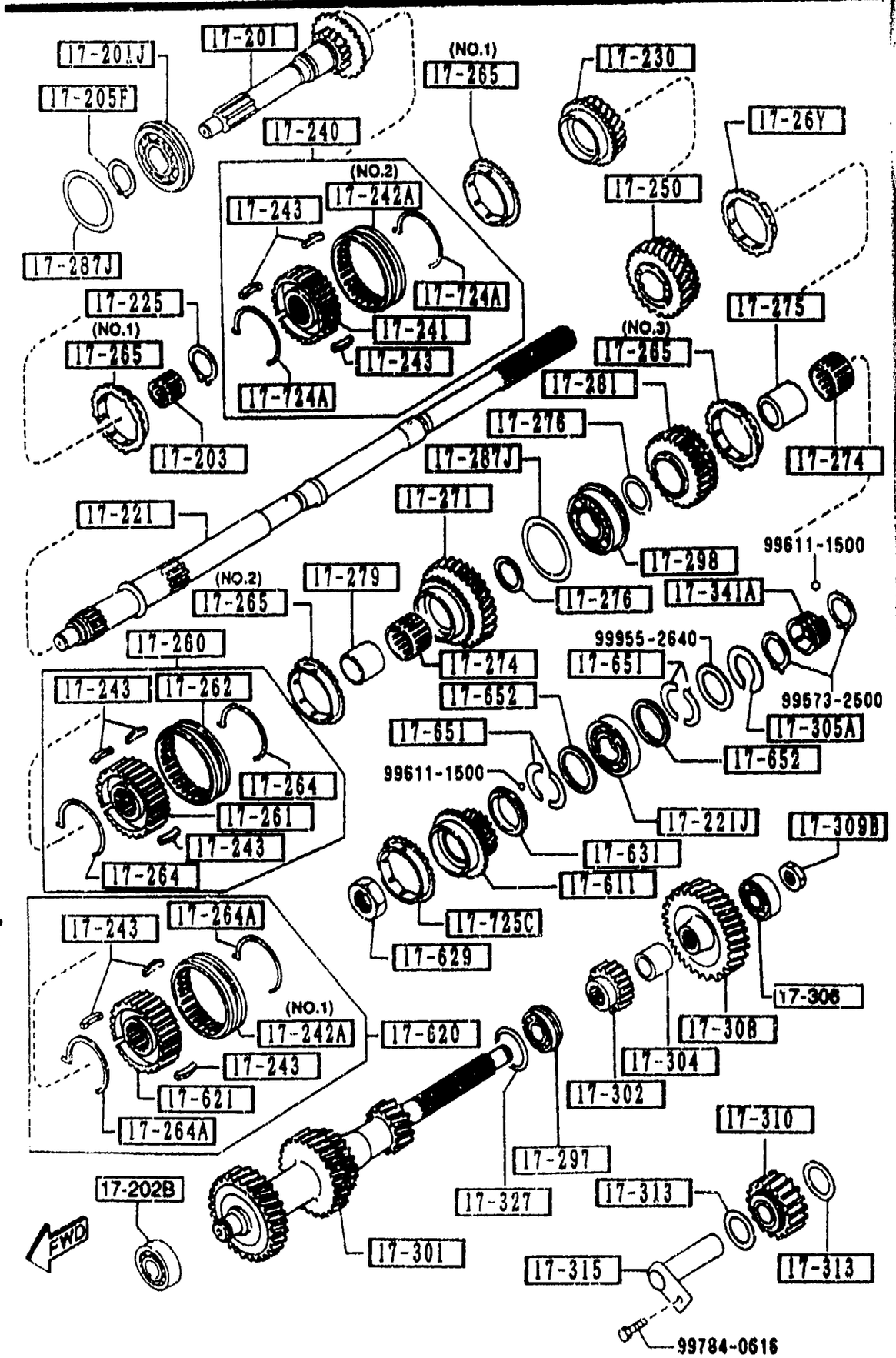

PART NO.	QTY	MODEL/RESTRICTION	MODEL/RESTRICTION	MODEL/RESTRICTION	FROM-TO
CONT'D					
M504-17-304	1				
17-305A		RING,RETAINING-BALL BEARING			
0839-17-305B	1				
17-306		BEARING,BALL			
*P502-17-204	1				-7820
*M502-17-299B	1				7820-
17-308		GEAR,COUNTER			
M510-17-308	1				
17-309B		NUT,LOCK-COUNTER SHAFT BR			
M501-17-309	1				
17-310		GEAR,REVERSE IDLE			
M513-17-310 AN(M513-17-310A)	1				-7501
M513-17-310A	1				7501-
17-313		WASHER,THRUST-REVERSE IDLE G. T=2.0MM			
M501-17-313	2				
17-315		SHAFT,REV. IDLE GEAR			
M501-17-140	1				
17-327		SHIM,ADJUST-COUNTER SHAFT GEAR			
0305-17-327	2	T=0.1MM			
0305-17-328	1	T=0.3MM			-7721
*0305-17-328	2	T=0.3MM			7721-
17-341A		GEAR,SPEEDO.DRIVE			
M503-17-341 A (M503-17-341A)	1				-7201
M503-17-341A	1				7201-
17-611		GEAR,OVER TOP			
M517-17-611	1				

7201 NA35*V-730033
7501 NA35*V-736464
7721 NA35*V-738834
7820 NA35*V-739035

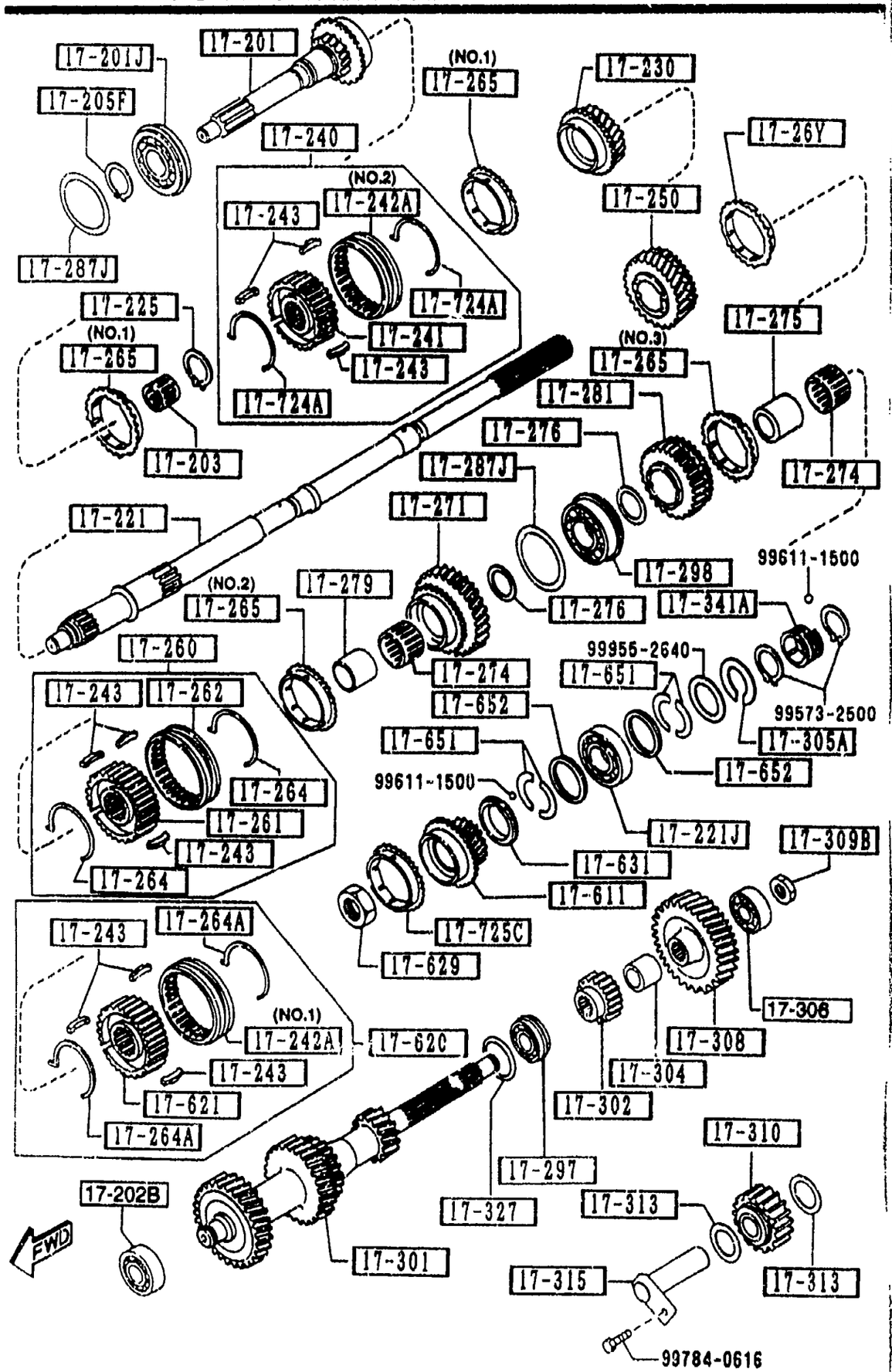

PART NO.	QTY	MODEL/RESTRICTION	MODEL/RESTRICTION	MODEL/RESTRICTION	FROM-TO
17-620		HUB SET,CLUTCH-O.T. & REV			
M505-17-620	1				
17-621		HUB,CLUTCH			
M505-17-621	1				
17-629		NUT,LOCK-CLUTCH HUB			
8601-17-629	1				
17-631		WASHER,THRUST LOCK-O VER TOP G.			
0884-17-632B	1	T=6.2MM			
0884-17-633B	1	T=6.4MM			
0884-17-634B	1	T=6.5MM			
0884-17-635B	1	T=6.6MM			
17-651		WASHER,THRUST			
M501-17-651	4	T=3.0MM			
M501-17-653	2	T=3.1MM			
M501-17-654	2	T=3.2MM			
M501-17-655	2	T=2.9MM			
17-652		RING,THRUST WASHER			
M501-17-652	2	T=2.0MM			
17-724A		SPRING,SYNCHRO.KEY			
W501-17-724	2				
17-725C		RING,SYNCHRONIZER			
V501-17-725	1				

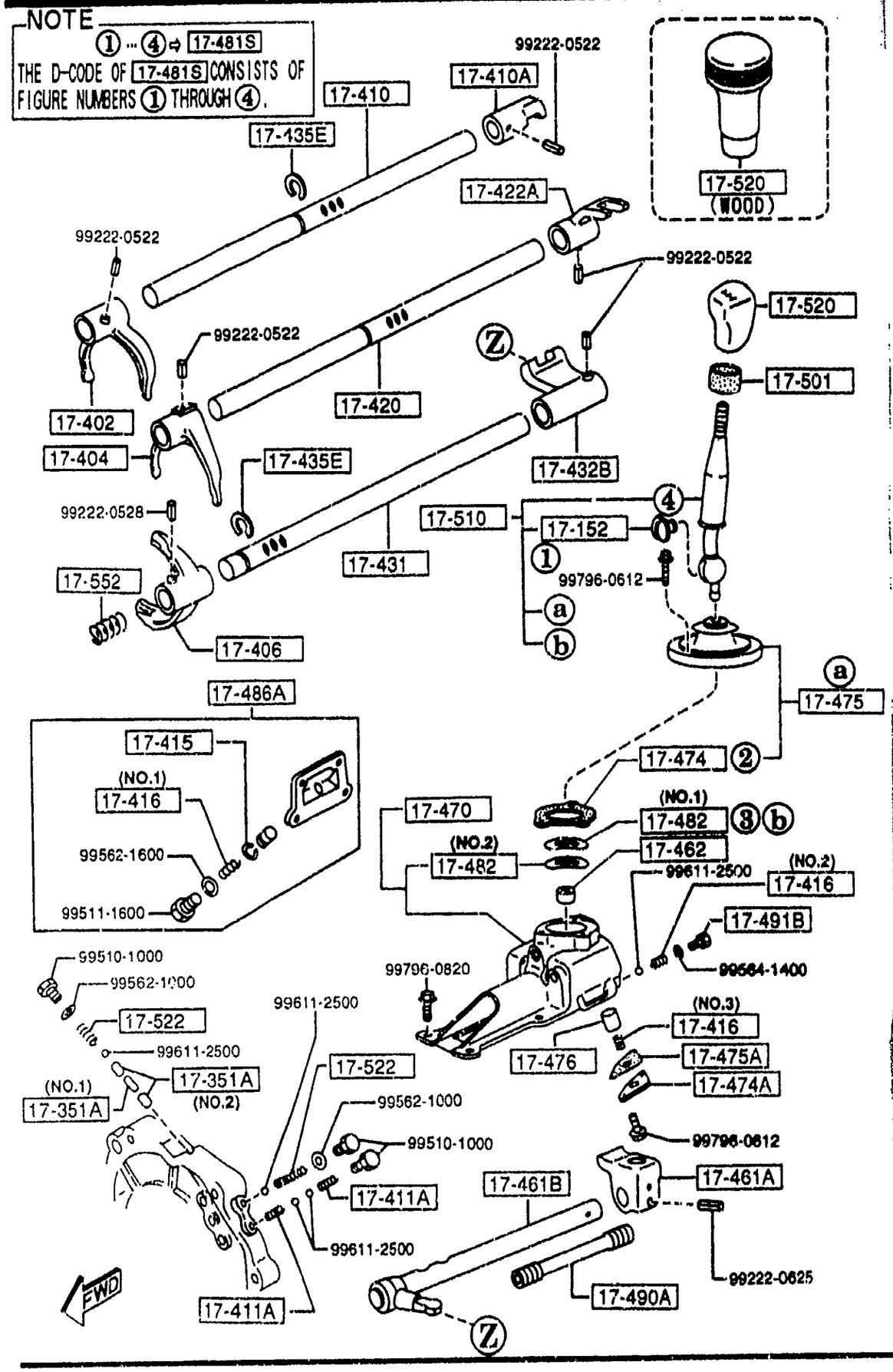

AUNA06

PART NO.	QTY	MODEL/RESTRICTION	MODEL/RESTRICTION	MODEL/RESTRICTION	FROM-TO
17-152		BUSH			
M501-17-515	1				
17-351A		PIN,INTER LOCK			
R501-17-351	1	(ILLUST. NO.1)			
0114-17-351	2	(ILLUST. NO.2)			
17-402		FORK,SHIFT (1ST & 2ND)			
M503-17-402	1				
17-404		FORK,SHIFT (3RD & 4TH)			
M501-17-404B	1				
17-406		FORK,SHIFT			
M504-17-406A	1				
17-410		ROD,SHIFT(1ST&2ND)			
M503-17-411	1				
17-410A		END,S/ROD(1ST&2ND)			
M507-17-412A	1				
17-411A		SPRING,SHIFT ROD-REVERSE			
0014-17-411	2				
17-415		RING,RETAINING-SHIFT ROD END			
3648-17-415	1				-7201
17-416		SPRING,SHIFT ROD END			
M501-17-416	1	(ILLUST. NO.1)			
M504-17-416	1	(ILLUST. NO.2)			
M505-17-416	1	(ILLUST. NO.3)			
17-420		ROD,SHIFT(3RD&4TH)			
M504-17-421A	1				
17-422A		END,S/ROD(3RD&4TH)			
M507-17-422A	1				
17-431		ROD,SHIFT-OVER TOP & REVERSE			

7201 NA35*V-730033

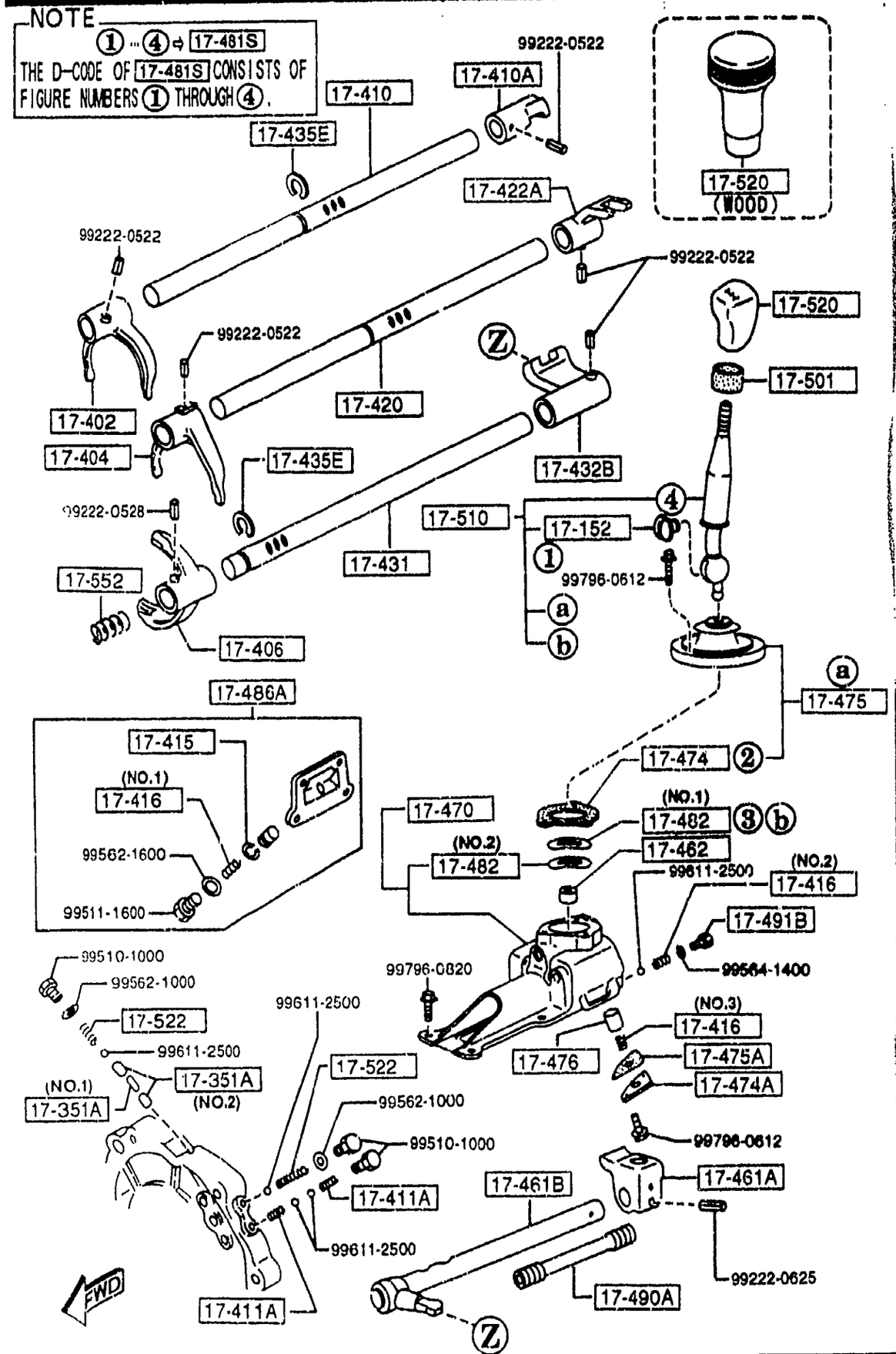

AUNA06

PART NO.	QTY	MODEL/RESTRICTION	MODEL/RESTRICTION	MODEL/RESTRICTION	FROM-TO
CONT'D					
M506-17-431A	1				
17-432B		END,SHIFT ROD(O/TOP& REV.)			
M508-17-432	1				
17-435E		RING,RETAINING			
R502-17-435	2				
17-461A		END,CONTROL LEVER			
M508-17-461A	1				
17-461B		ROD,CONTROL			
M516-17-450A	1				
17-462		SHEET,SPRING			
0398-17-462A	1				
17-470		CASE,CHANGE CONTROL			
M510-17-470C	1				
17-474		GASKET,COVER PLATE			
0303-17-474	1				
17-474A		CAP,SPRING			
M501-17-474	1				
17-475		BOOT,DUST-CHANGE LEVER			
M513-17-480A	1				
17-475A		GASKET,SPRING CAP			
M501-17-475	1				
17-476		SPINDLE,SELECT LOCK			
M502-17-476A	1				
17-481S		BUSH SET,CHANGE LEVER			
8AN1-17-481	1				
17-482		WASHER,WAVE-CHANGE CONT.CASE			
M505-17-482	1	(ILLUST. NO.1)			
8599-17-482	1	(ILLUST. NO.2)			

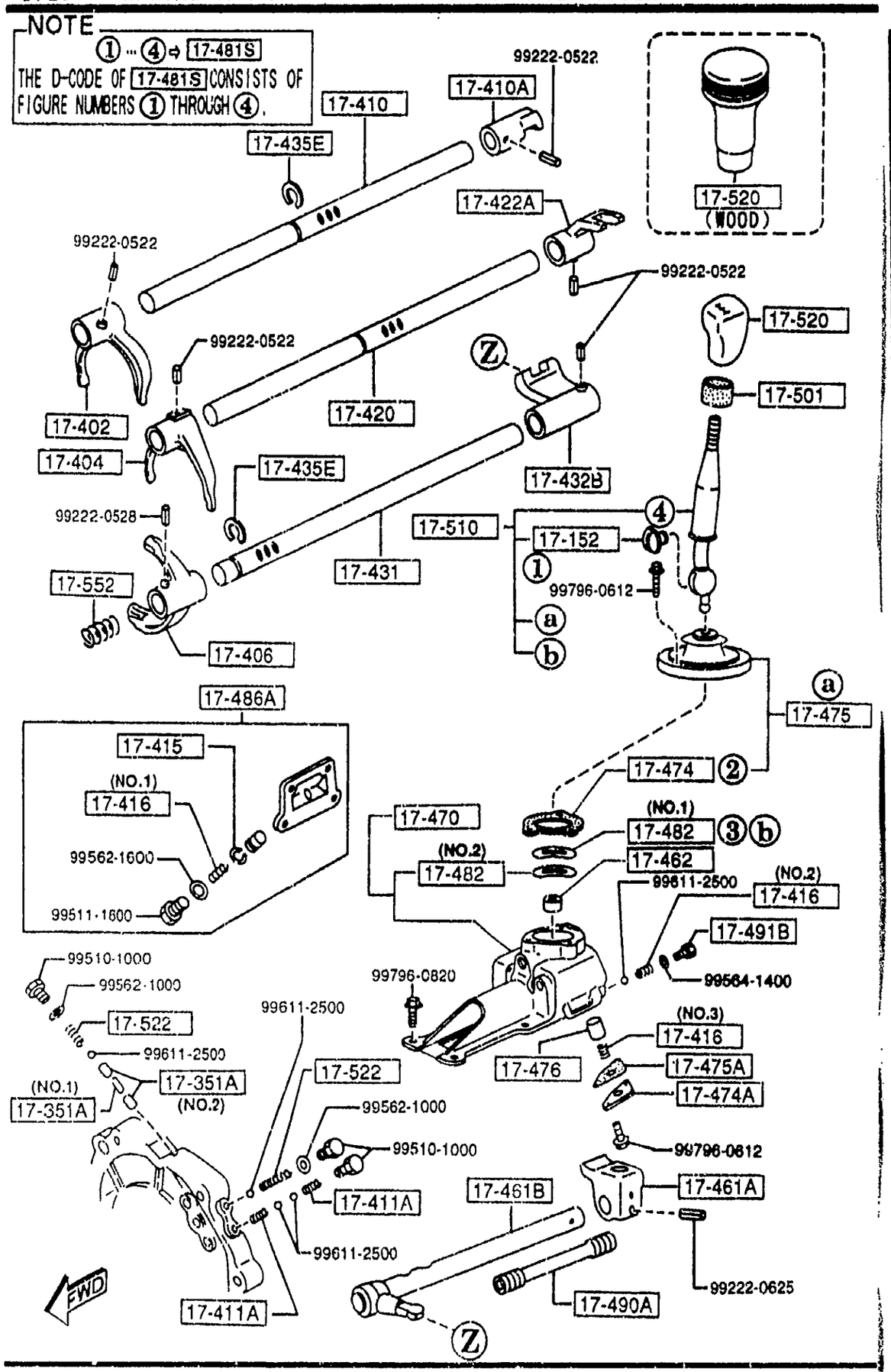

AUNA06

PART NO.	QTY	MODEL/RESTRICTION	MODEL/RESTRICTION	MODEL/RESTRICTION	FROM-TO
17-486A		COVER,BLIND			
R501-17-47X AN(R501-17-47XA)	1				-7201
R501-17-47XA	1				7201-
17-490A		COVER,ROD			
M504-17-490A	1				
17-491B		CAP,SPRING			
0183-17-491	1				
17-501		INSULATOR,CHG LEVER			
M501-17-501	1				
17-510		LEVER,CHANGE			
M524-17-510C	1				
17-520		KNOB,CHANGE LEVER			
M515-17-520	1	(URETHANE)			
00	INT-	NA3 NA5 BLACK			
M517-17-520	1	(WOOD)			
M518-17-520A	1	(LEATHER)			
17-522		SPRING			
0103-17-411	2				
17-552		SPRING			
M505-17-552	1				

7201 NA35*V-730033

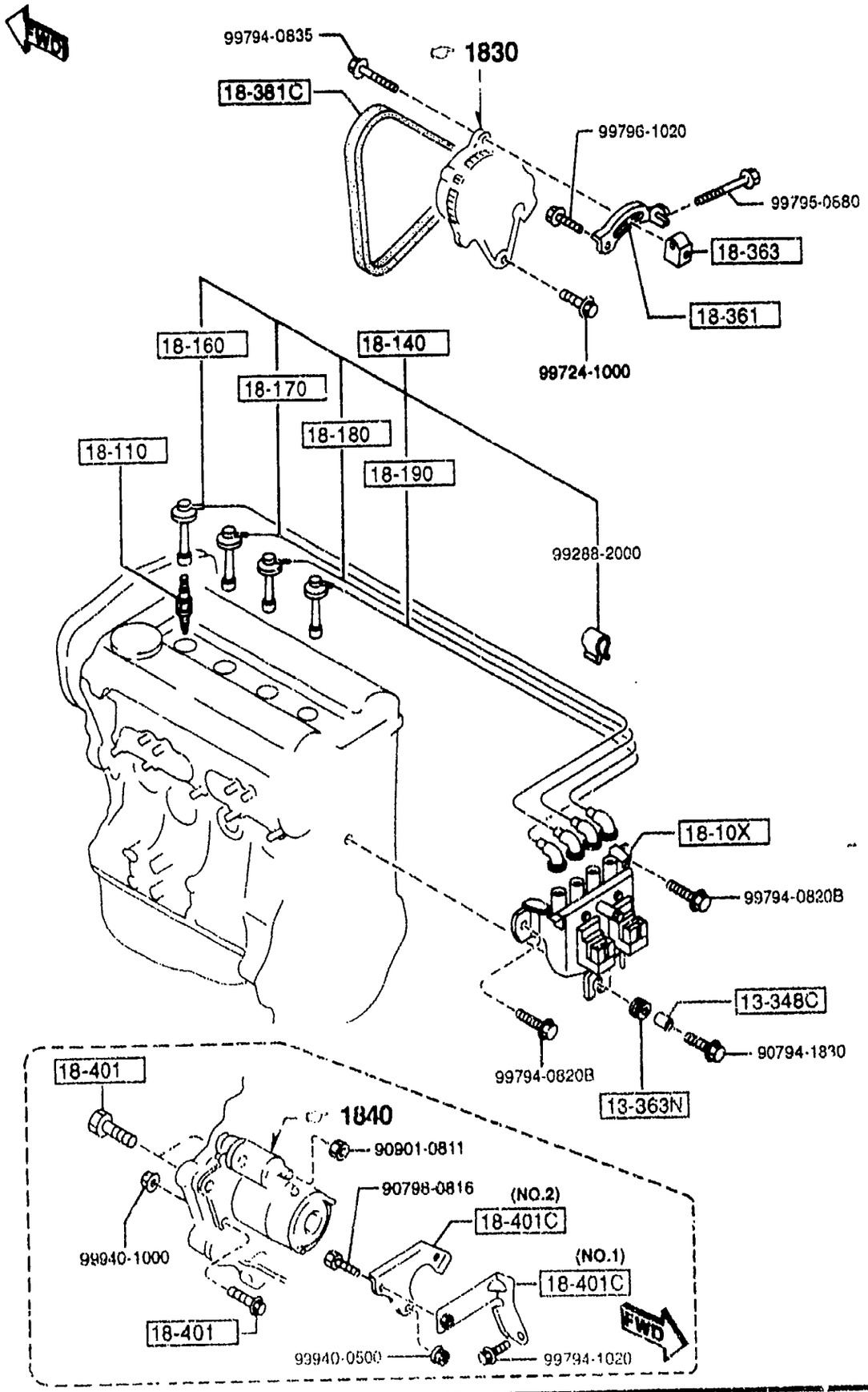

PART NO.	QTY	MODEL/RESTRICTION	MODEL/RESTRICTION	MODEL/RESTRICTION	FROM-TO
13-348C B61P-13-348	1	SPACER			
13-363N B61P-13-363A	1	RUBBER,MOUNTING			
18-10X BPE8-18-10XB	1	COIL & IGNITER			
18-110 BP01-18-110	4	PLUG,SPARK BKR5E-11 NGK (STD.)			
BP02-18-110	4	K16PR-U11 ND (STD.)			
BP03-18-110	4	BKR6E-11 NGK (OPTION COLD TYPE)			
BP04-18-110	4	K20PR-U11 ND (OPTION COLD TYPE)			
18-140 BPE8-18-140A	1	CORD SET,HI.TENSION			
18-160 BPE8-18-T51	1	CORD NO.1,HI.TENSION			
18-170 BPE8-18-T52	1	CORD NO.2,HI.TENSION			
18-180 BPE8-18-T53	1	CORD NO.3,HI.TENSION			
18-190 BPE8-18-T54A	1	CORD NO.4,HI.TENSION			
18-361 B6BF-18-361C	1	STRAP,ALTERNATOR			
18-363 FP01-18-363	1	SPACER,STRAP			
18-381C B6BF-18-381		BELT'V',W/PUMP&ALTER NATOR 4PK L=885 BANDO			

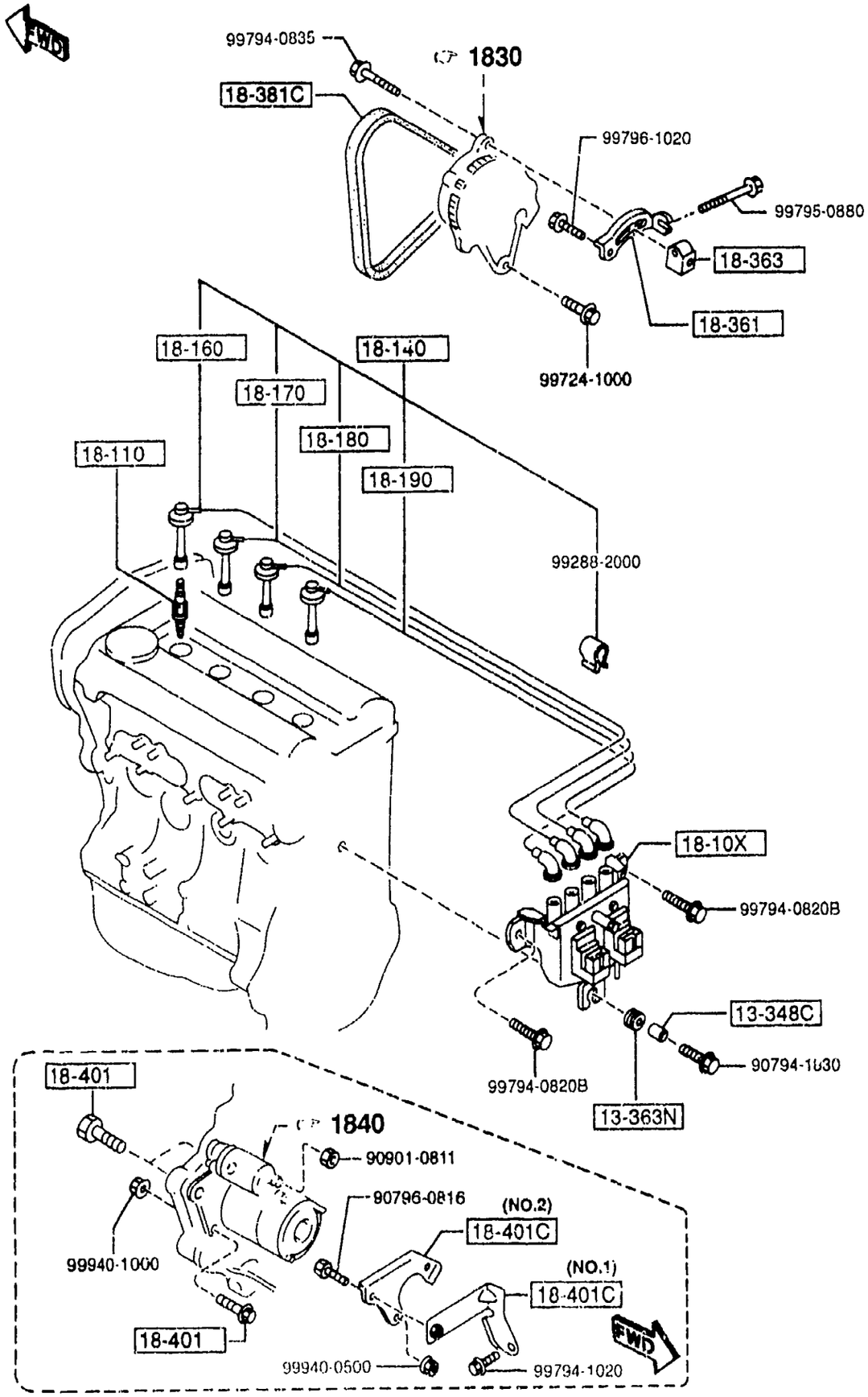

PART NO.	QTY	MODEL/RESTRICTION	MODEL/RESTRICTION	MODEL/RESTRICTION	FROM-TO
CONT'D					
	1				
B596-18-381	1	4PK L=885 GOOD YEAR			-6801
+---------+					
| 18-401 |		BOLT,STARTER			
+---------+					
B6BG-18-401A	3				
+---------+					
| 18-401C |		BRACKET,STARTER			
+---------+					
BPE8-18-410	1	(ILLUST. NO.1) (MT)			
B660-18-411C	1	(ILLUST. NO.2) (MT)			

6801 NA35*V-719630

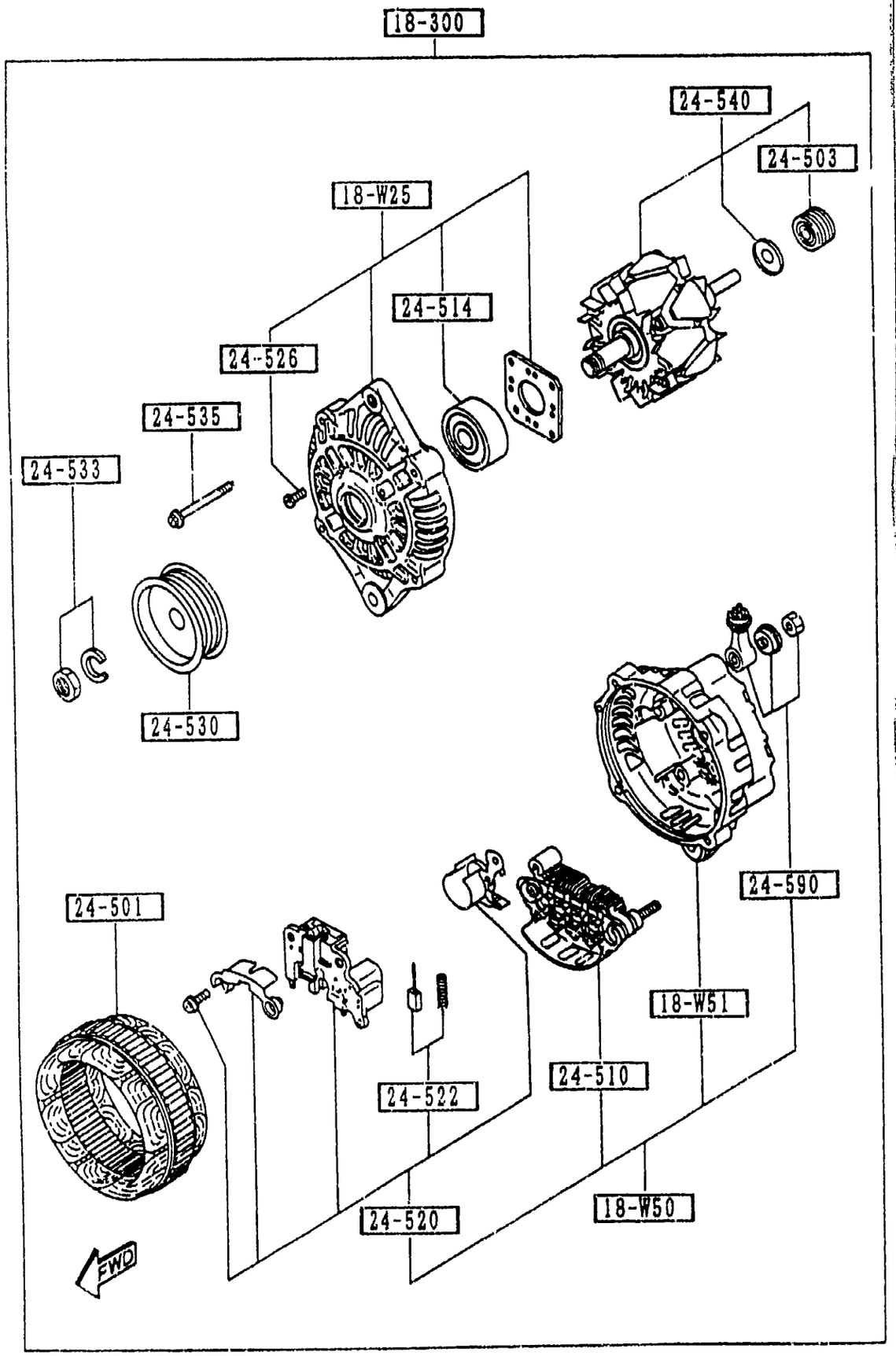

1830 -1 ALTERNATOR

PART NO.	QTY	MODEL/RESTRICTION	MODEL/RESTRICTION	MODEL/RESTRICTION	FROM-TO
18-W25		COVER,FRONT-ALTERNATOR			
FS05-18-W25	1				
18-W50		COVER,REAR-ALTERNATOR			
BPE8-18-W50	1				-6B01
BPE9-18-W50	1				6B01-
18-W51		COVER,REAR-ALTERNATOR			
FS05-18-W51	1	(G)			
18-300		ALTERNATOR			
BPE8-18-300	1	(MT)			-6B01
BPE9-18-300	1	(AT)			-6B01
AN(BPE9-18-300A)					
BPE9-18-300A	1				6B01-
24-501		STATOR			
JE15-18-W45	1				
24-503		BEARING,BALL-ALT. REAR			
N336-18-W36	1				
24-510		RECTIFIER			
BPE8-18-W60	1				-6B01
BPE9-18-W60	1				6B01-
24-514		BEARING,BALL-ALT. FRONT			
PN16-18-W27	1				
24-520		REGULATOR,VOLTAGE			
B64J-18-W70A	1				-6B01
B62P-18-W70	1				6B01-
24-522		BRUSH			
B3C7-18-W77	2				
24-526		SCREW SET			
RF71-18-W26	1				

6B01 NA35*V-723096

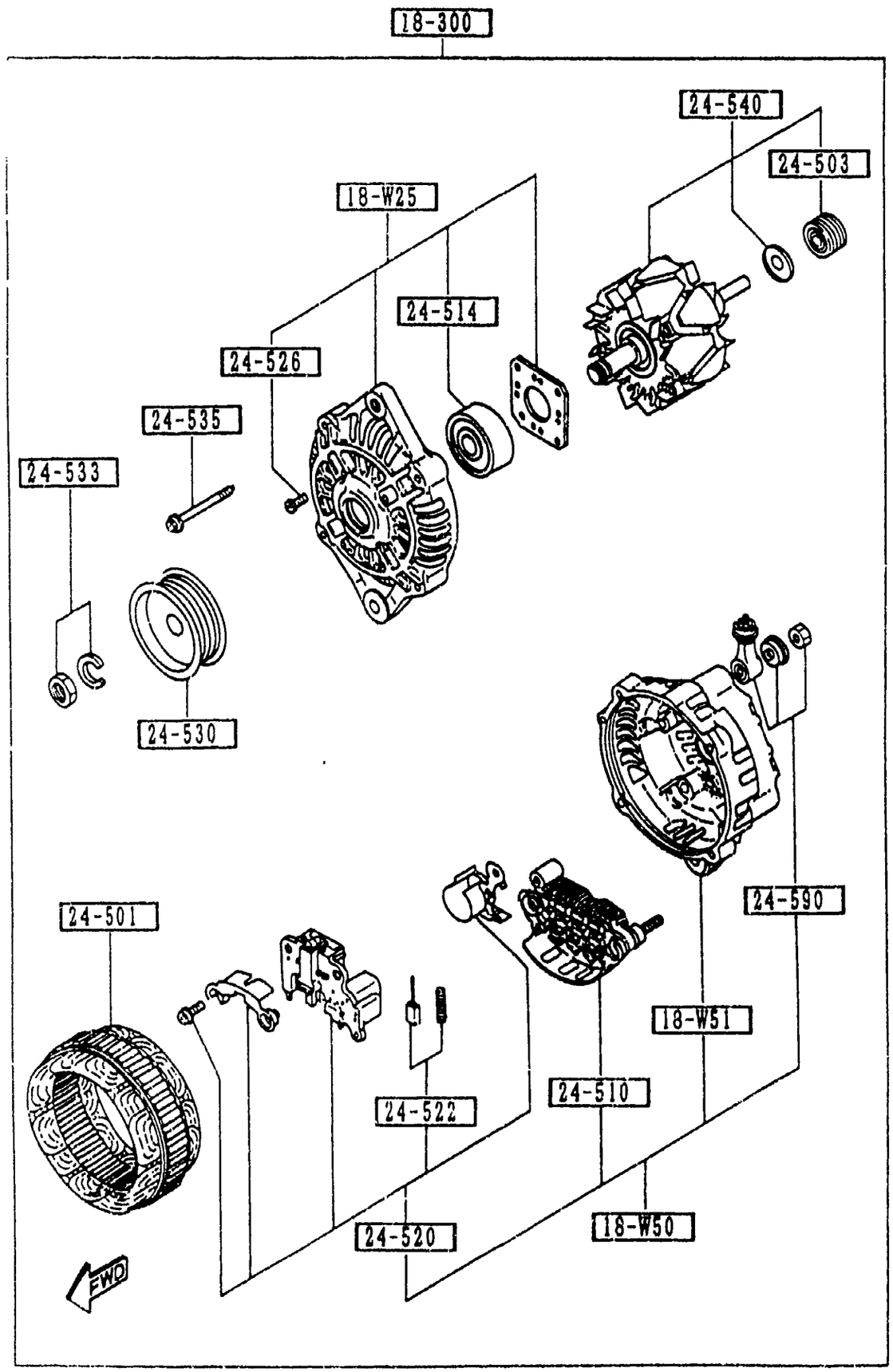

1830 -2 * ALTERNATOR

PART NO.	QTY	MODEL/RESTRICTION	MODEL/RESTRICTION	MODEL/RESTRICTION	FROM-TO
24-530		PULLEY			
B3C7-18-W10	1				
24-533		NUT SET			
B3C7-18-W05	1				
24-535		SCREW SET			
RF71-18-W20	1				
24-540		ROTOR			
F285-18-W35A	1	(AT)			
B366-18-W35D	1	(MT)			-6B01
F285-18-W35A	1	(MT)			6B01-
24-590		TERMINAL SET			
BPD3-18-W80	1				

6B01 NA35*V-723096

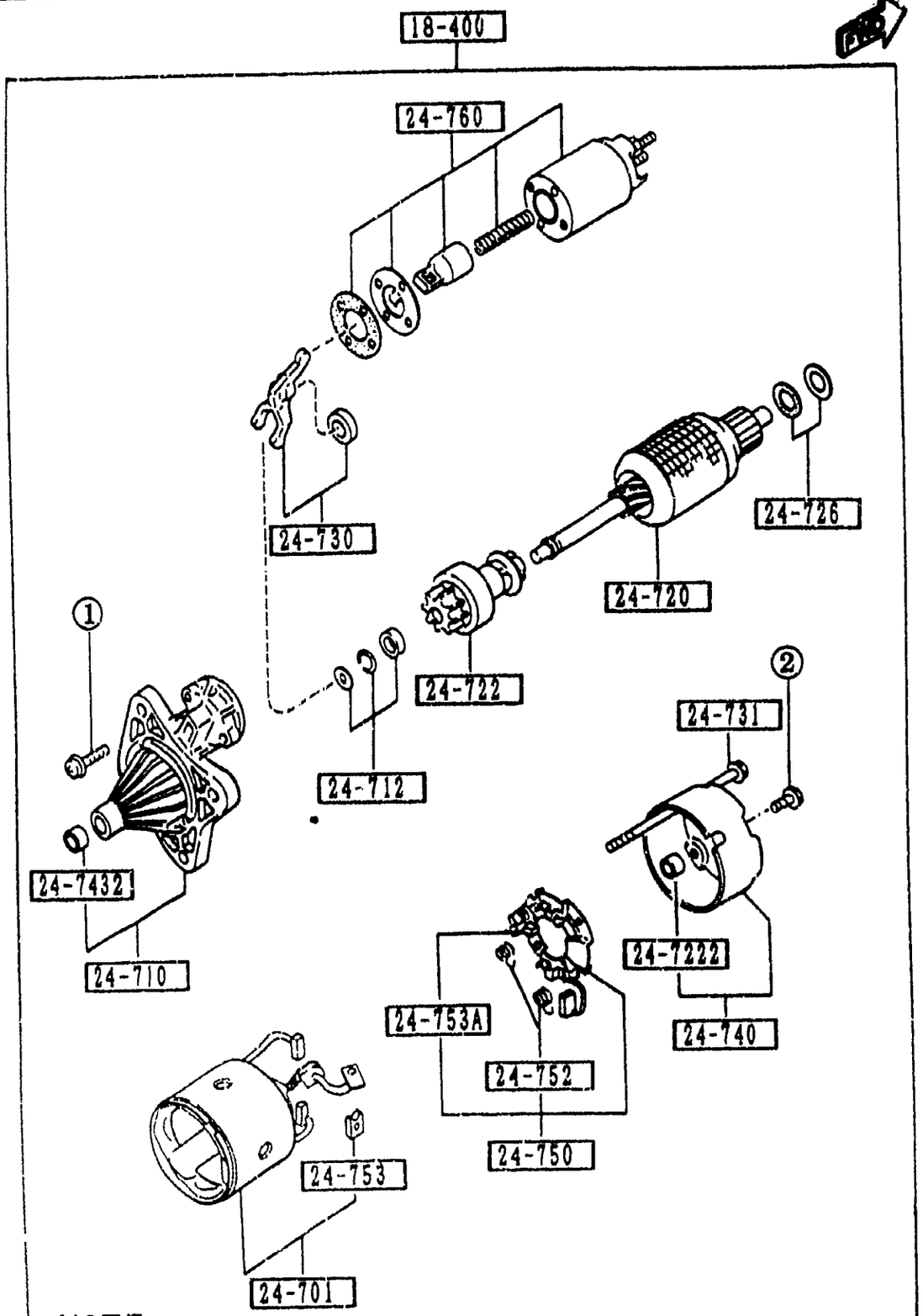

NOTE

①…②⇨ 24-725

THE D-CODE OF 24-725 CONSISTS OF FIGURE NUMBERS ① THROUGH ②.

PART NO.	QTY	MODEL/RESTRICTION	MODEL/RESTRICTION	MODEL/RESTRICTION	FROM-TO
18-400		STARTER			
B61R-18-400A	1	NON ASBESTOS			
24-701		YOKE			
B61R-18-X65	1				
24-710		BRACKET,FRONT			
B61R-18-X00	1				
24-712		STOPPER SET			
E356-18-X30	1				
24-720		ARMATURE			
B6S8-18-X60	1	NON ASBESTOS			
24-722		CLUTCH,OVER RUNNING			
B630-18-X45	1	MITSUBISHI			
24-7222		SLEEVE,BEARING-REAR			
E356-18-X81	1				
24-725		SCREW SET			
E356-18-X95	1	MITSUBISHI			
24-726		WASHER SET			
E356-18-X92	1				
24-730		LEVER			
E356-18-X05	1	MITSUBISHI			
24-731		BOLT SET			
B630-18-X90	2				
24-740		BRACKET,REAR			
E356-18-X80	1	MITSUBISHI			
24-7432		SLEEVE,BEARING-FRONT			

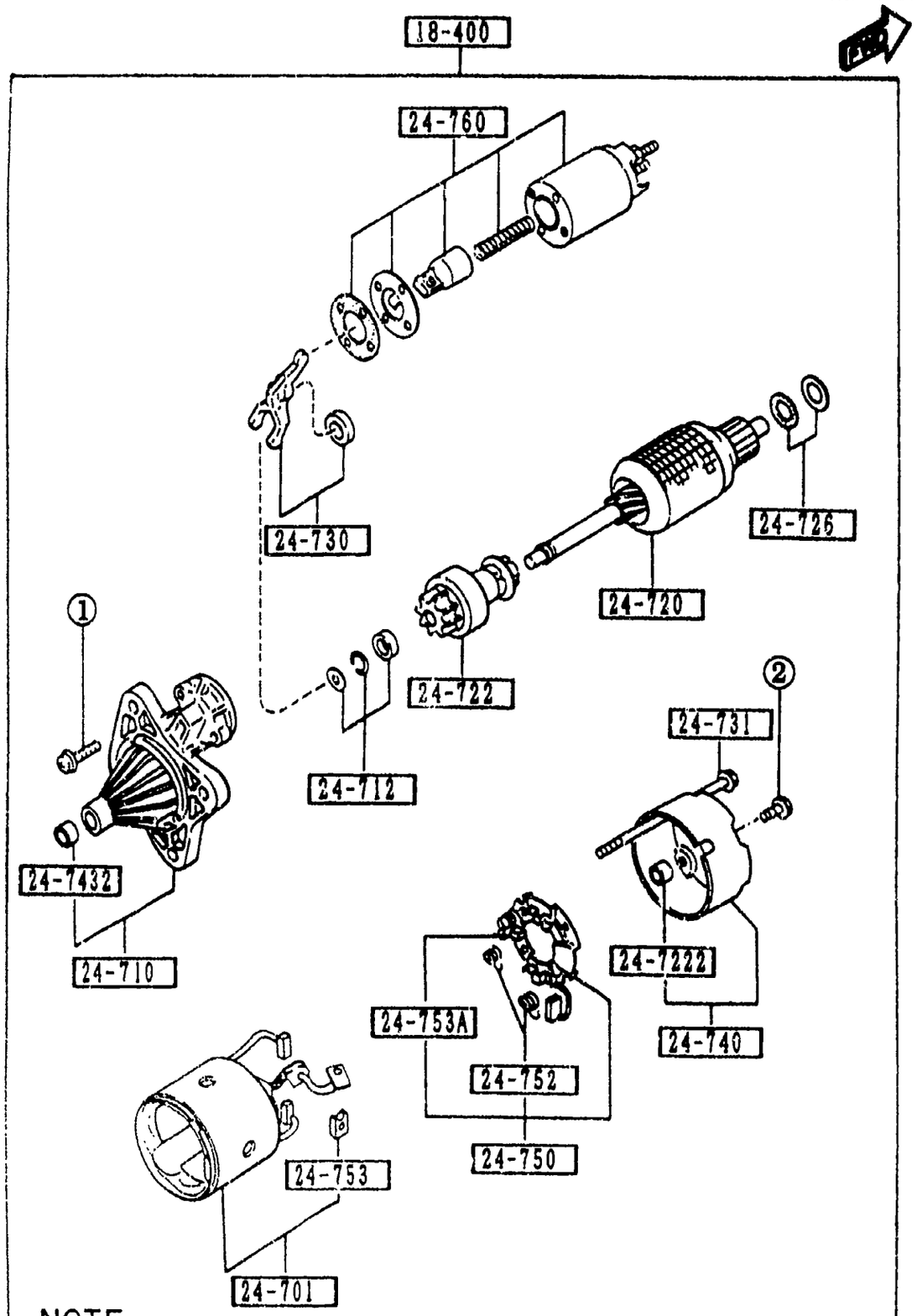

NOTE

①…②⇨ 24-725

THE D-CODE OF 24-725 CONSISTS OF FIGURE NUMBERS ① THROUGH ②.

PART NO	QTY	MODEL/RESTRICTION	MODEL/RESTRICTION	MODEL/RESTRICTION	FROM-TO
CONT'D					
F210-18-X01	1				
24-750		HOLDER,BRUSH			
B61P-18-X70	1				
24-752		SPRING,BRUSH			
0222-24-752A	4				
24-753		BRUSH,YOKE			
B630-18-X66	2				
24-753A		BRUSH			
B660-18-X66	2				
24-760		SWITCH			
E356-18-X10	1	MITSUBISHI			

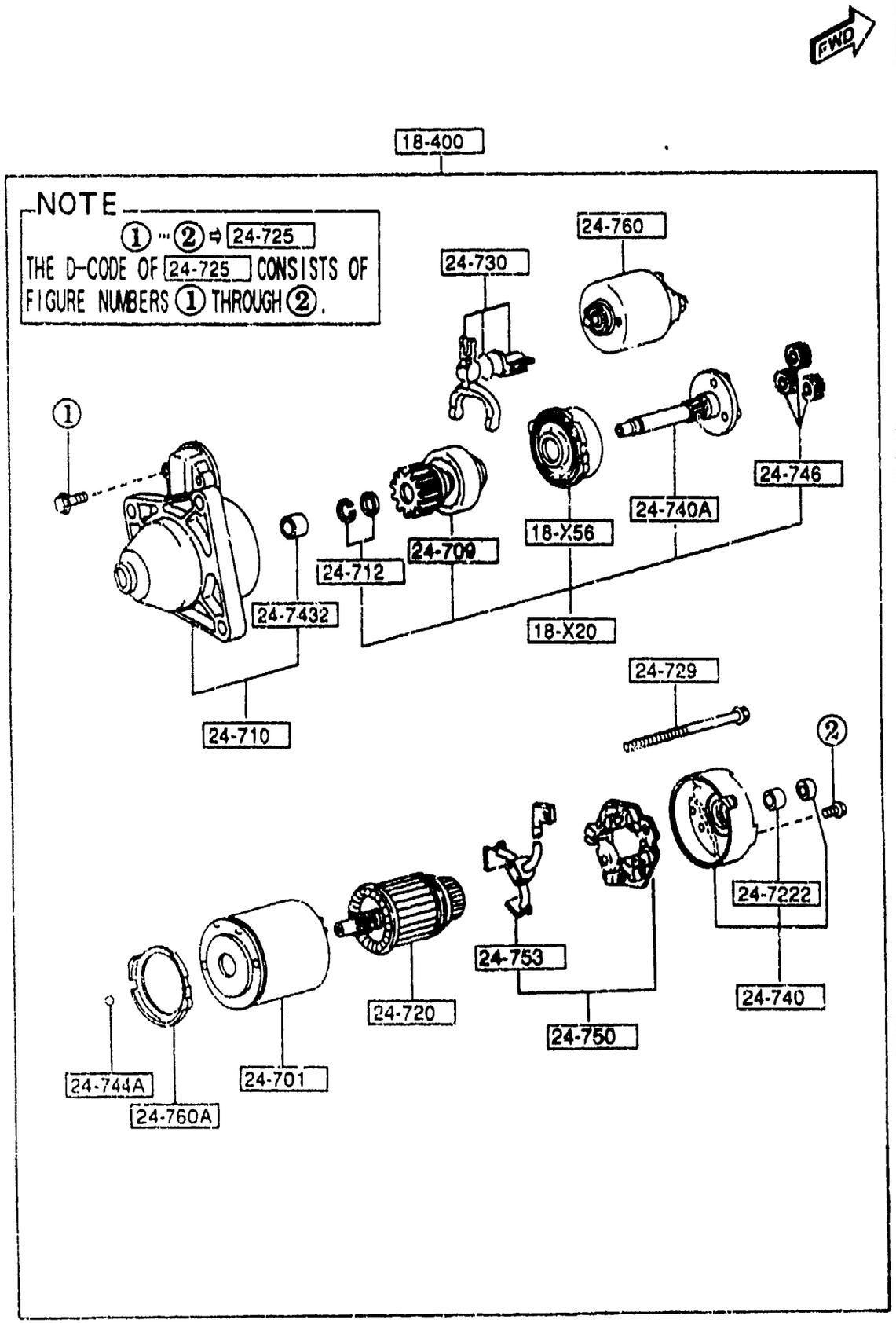

PART NO.	QTY	MODEL/RESTRICTION	MODEL/RESTRICTION	MODEL/RESTRICTION	FROM-TO
18-X20 AM15-18-X20	1	SHAFT,PINION			
18-X56 F225-18-X56	1	GEAR,INTERNAL-STARTER MITSUBISHI			
18-400 BPE9-18-400	1	STARTER			
24-701 JF01-18-X65	1	YOKE			
24-709 AM15-18-X25	1	PINION			
24-710 BPE9-18-X00	1	BRACKET,FRONT			
24-712 N326-18-X30	1	STOPPER SET MITSUBISHI			
24-720 AM15-18-X60	1	ARMATURE			
24-7222 N326-18-X62A	1	SLEEVE,BEARING-REAR MITSUBISHI			
24-725 E356-18-X95	1	SCREW SET MITSUBISHI			
24-729 N326-18-X91	2	BOLT			
24-730 N326-18-X05	1	LEVER			
24-740 JF01-18-X80A	1	BRACKET,REAR			

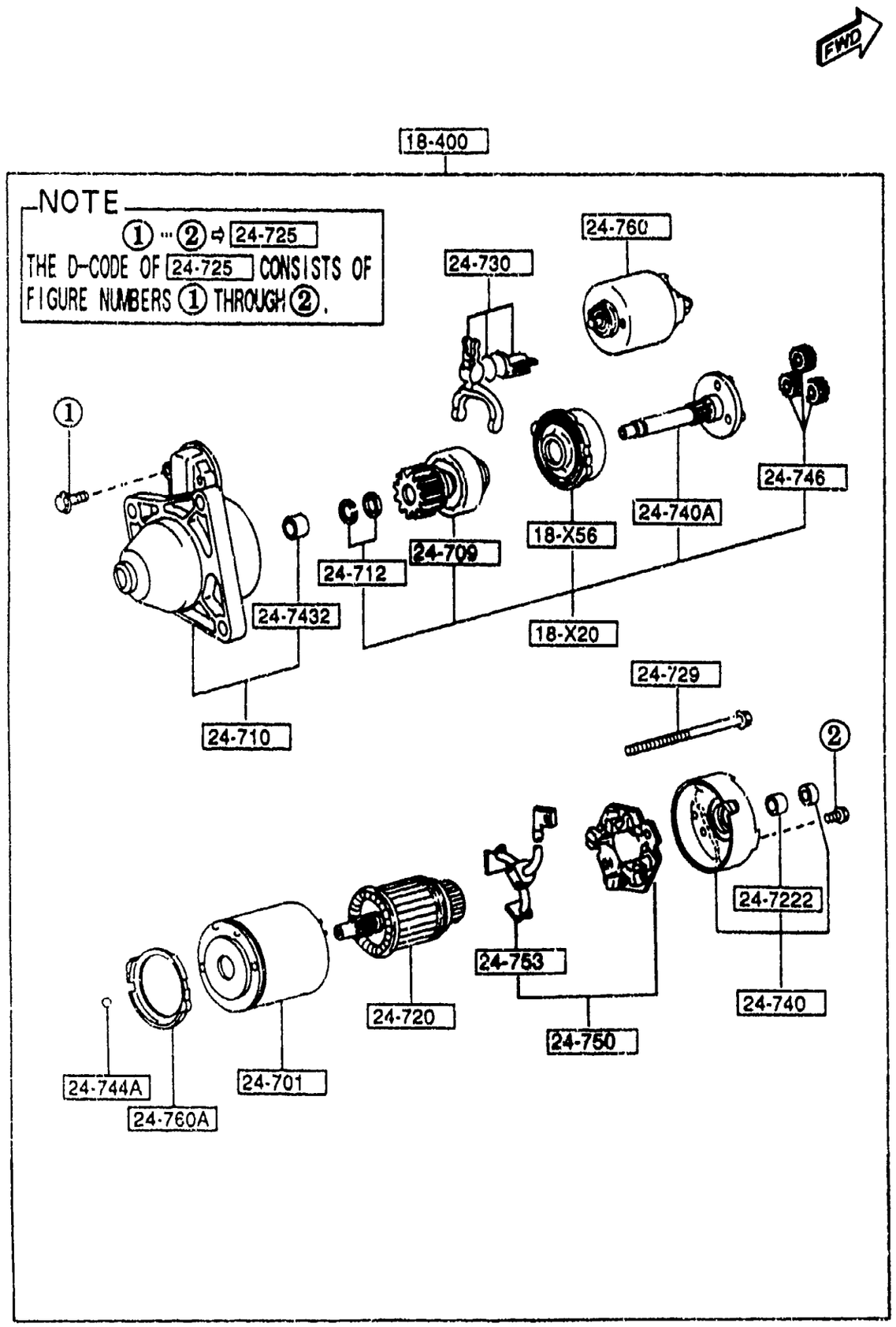

PART NO.	QTY	MODEL/RESTRICTION	MODEL/RESTRICTION	MODEL/RESTRICTION	FROM-TO
24-740A F214-18-X40	1	SHAFT			
24-7432 E356-18-X01	1	SLEEVE,BEARING-FRONT MITSUBISHI			
24-744A N326-18-X93	1	BALL,STEEL MITSUBISHI			
24-746 N326-18-X57	3	GEAR MITSUBISHI			
24-750 F2D4-18-X70	1	HOLDER,BRUSH			
24-753 F2D4-18-X66	1	BRUSH,YOKE			
24-760 BPD4-18-X10	1	SWITCH			
24-760A N326-18-X87	1	GASKET			

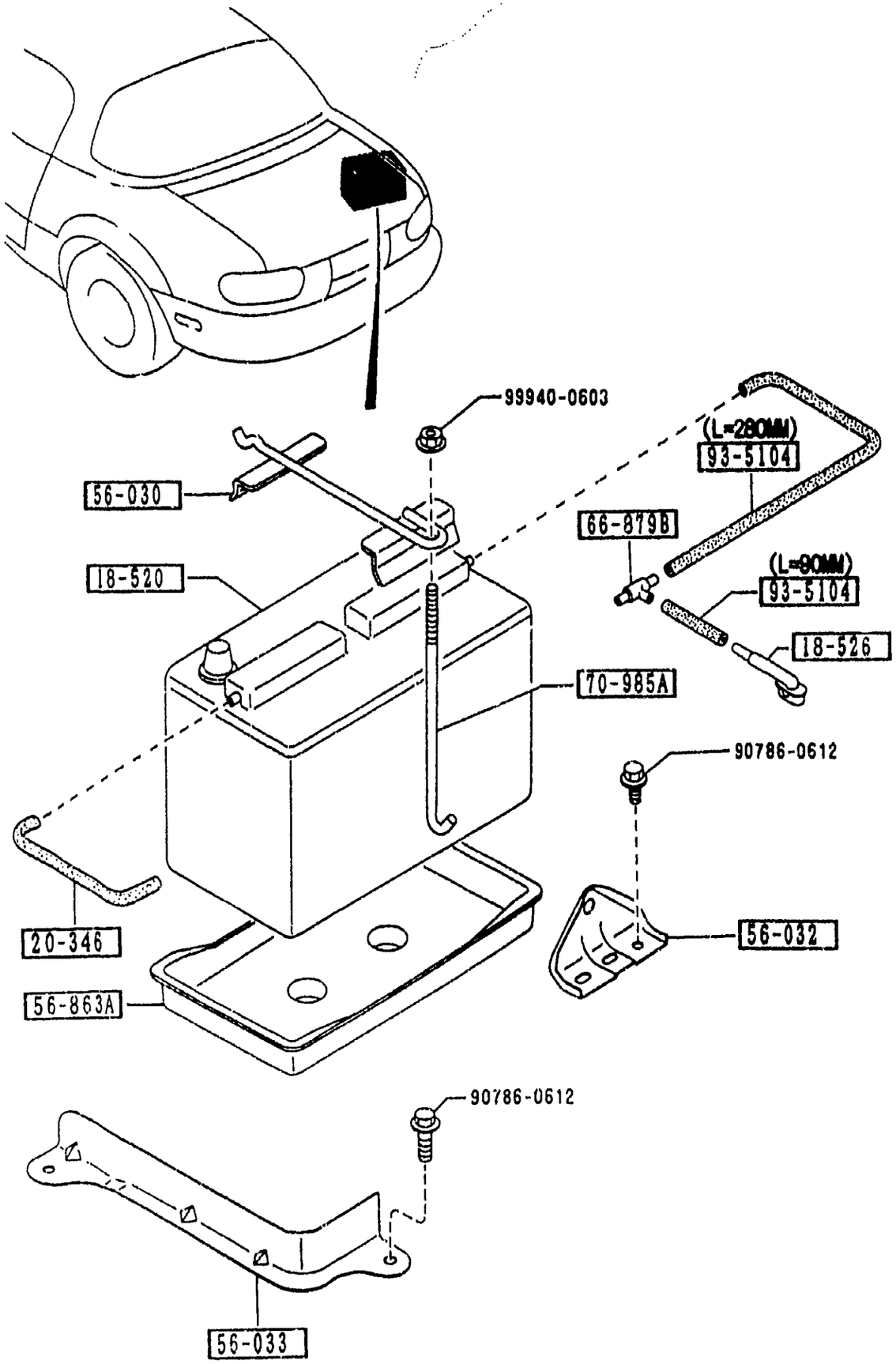

PART NO.	QTY	MODEL/RESTRICTION	MODEL/RESTRICTION	MODEL/RESTRICTION	FROM-TO
18-520		BATTERY			
B6AC-18-520	1	S46A24L(S) PANASONIC			
18-526		CONNECTOR,TUBE-BATTERY			
B61P-18-526	1				
20-346		TUBE,VACUUM			
B61P-18-524	1				
56-030		CLAMP,BATTERY			
NA01-56-03XA	1				
56-032		BRACKET,BATTERY CLAMP			
NA01-56-032B	1				
56-033		BRACKET,STOPPER-BATTERY			
NA01-56-033B	1				
56-863A		TRAY,BATTERY			
B095-56-032	1				
66-879B		JOINT			
0813-66-879	1				
70-985A		BOLT,CLAMP			
0259-54-292A	1				
93-5104		HOSE			
99351-04999	1	L=1M CUT IT TO USE			

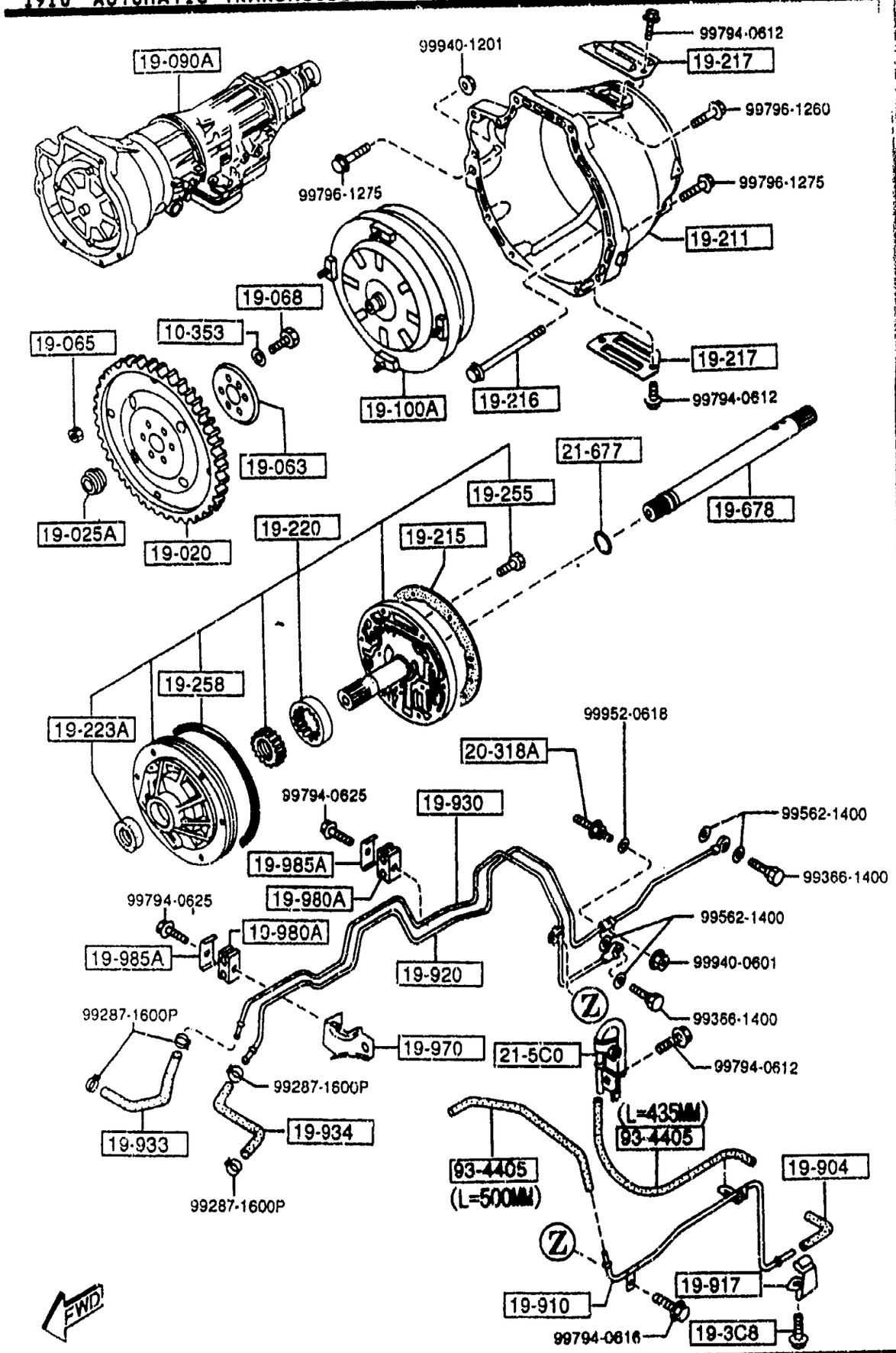

PART NO.	QTY	MODEL/RESTRICTION	MODEL/RESTRICTION	MODEL/RESTRICTION	FROM-TO
10-353		WASHER,PLAIN			
0290-10-353	6				
19-020		PLATE,DRIVE			
BU55-19-020	1				
19-025A		ADAPTER,DRIVE PLATE			
FU60-19-025	1				-7A20
19-063		PLATE,BACKING			
FT31-19-063	1				-7A20
*FA01-19-025	1	SUMINO INDUSTORY			7A20-
19-065		NUT			
FU51-19-065	4				
19-068		BOLT,LOCK			
FT31-19-064	6				
19-090A		T/MISSION CPT.			
N451-19-090C A (N451-19-090D)	1				-7201
N451-19-090D A (N451-19-090E)	1				7201-7415
N451-19-090E	1				7415-
19-100A		CONVERTER,TORQUE			
BU55-19-100	1				-7107
N451-19-100	1				7107-
19-211		HOUSING,CONVERTER			
BU55-19-211	1				
19-215		GASKET,OIL PUMP			
BU46-19-215	1	NON ASBESTOS			
19-216		BOLT			
BU01-19-216	6				

7107 NA35*V-727942
7201 NA35*V-730033
7415 NA35*V-735532
7A20 NA35*V-739053

1910 AUTOMATIC TRANSMISSION TORQUE CONVERTER, OIL PUMP & PIPINGS

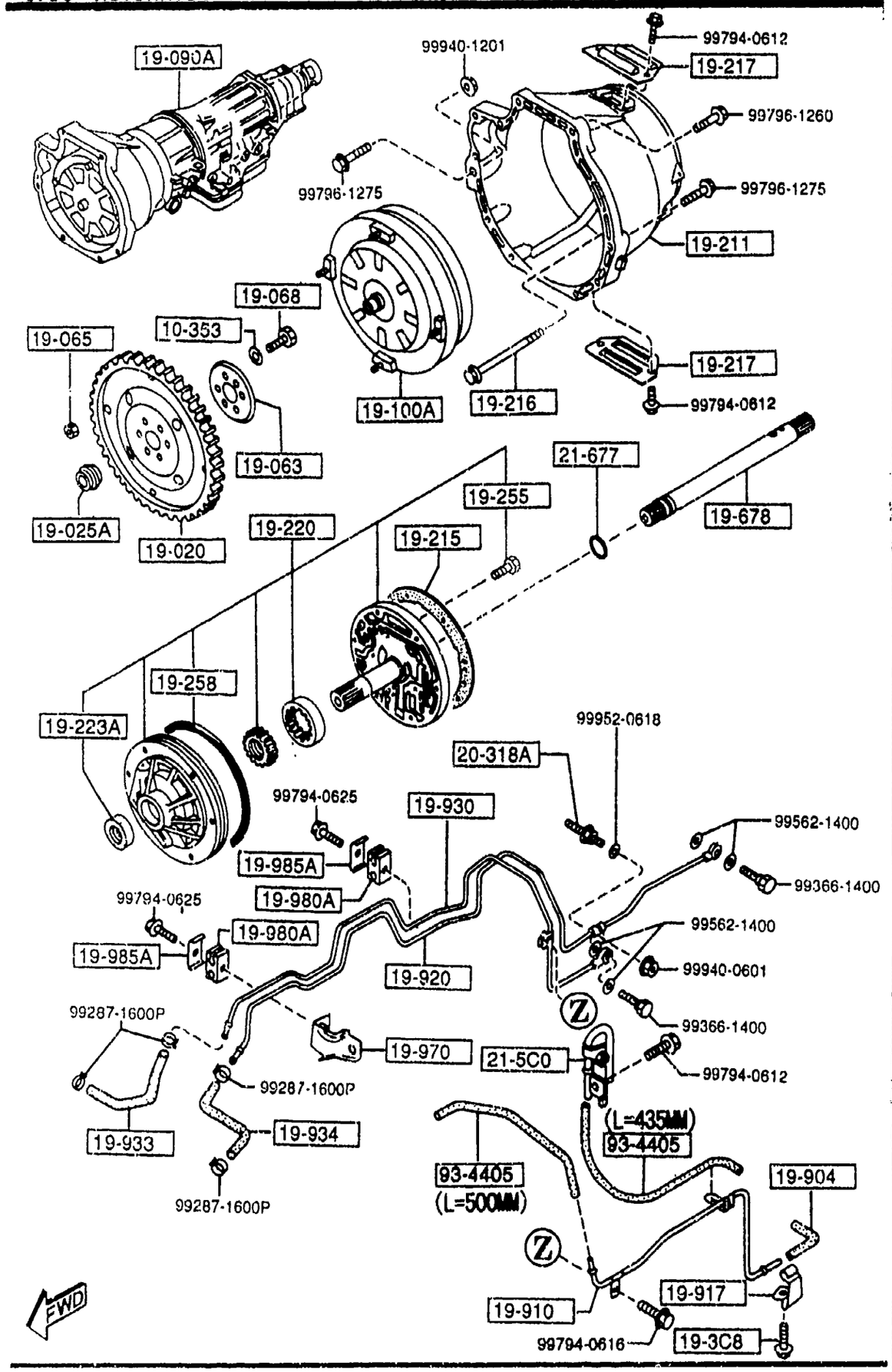

PART NO.	QTY	MODEL/RESTRICTION	MODEL/RESTRICTION	MODEL/RESTRICTION	FROM-TO
19-217		COVER,BLIND			
BU55-19-217	2				
19-220		PUMP,OIL			
N451-19-220	1				-7415
A (N451-19-220A)					
N451-19-220A	1				7415-
19-223A		SEAL,OIL			
0338-19-223A	1	NOK			
19-255		BOLT			
0338-19-255	5				
19-258		SEAL,CUT RING			
0338-19-258	1				
19-3C8		BOLT,BAFFLE PLATE			
BU55-19-3C8	1	L=12MM			
19-678		SHAFT,INPUT			
N451-21-678	1				
19-904		HOSE,VACUUM			
0338-19-904A	1				
19-910		PIPE,VACUUM			
BU55-19-910A	1				
19-917		CLIP			
0436-19-917	1				
19-920		PIPE,OIL			
N451-19-920	1				
19-930		PIPE,OIL			
N452-19-930	1				
19-933		HOSE,OIL			
BU55-19-933A	1				

7415 NA35*V-735532

1910 AUTOMATIC TRANSMISSION TORQUE CONVERTER, OIL PUMP & PIPINGS

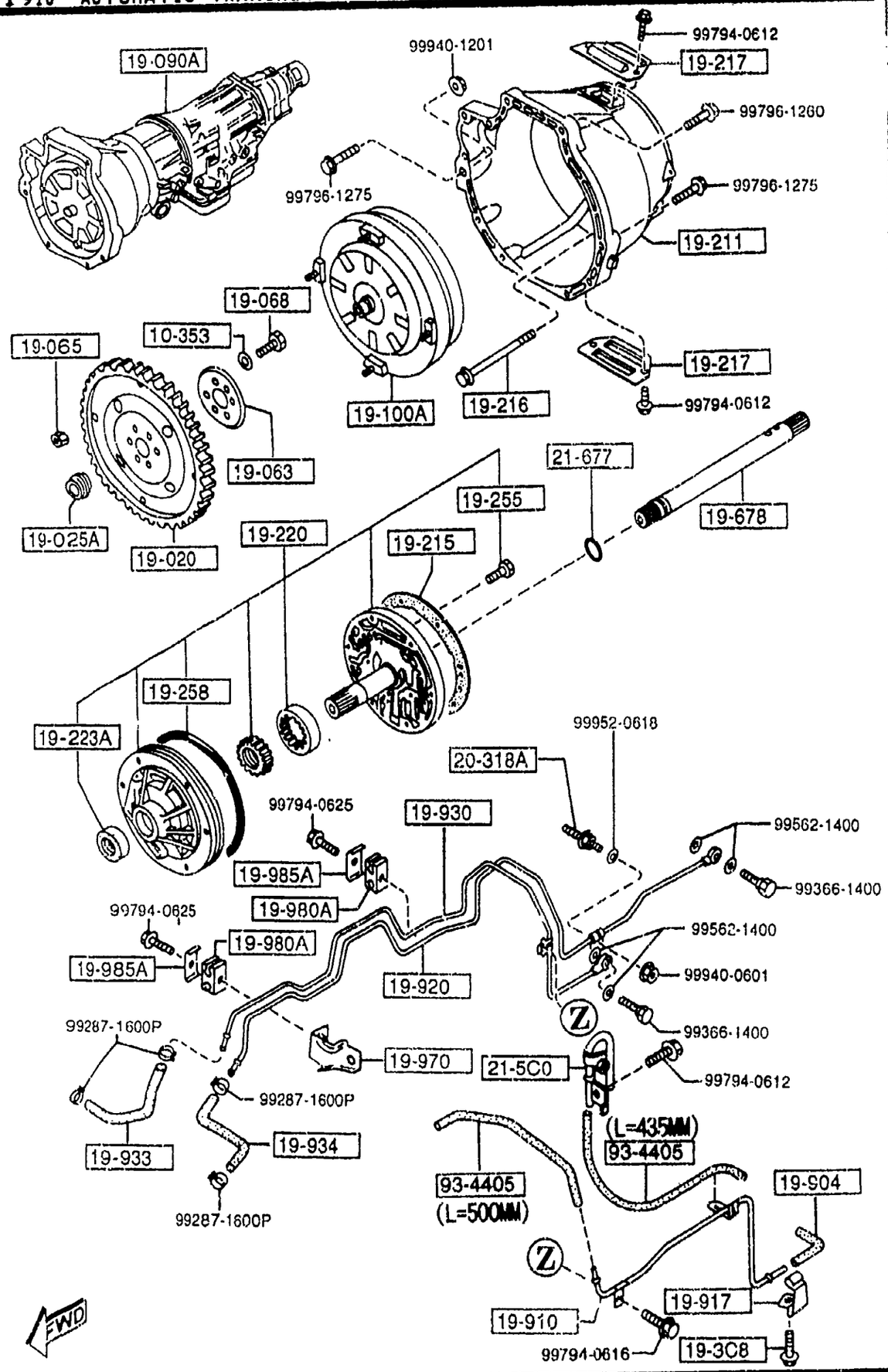

AUNA06

1910 -3 * AUTOMATIC TRANSMISSION TORQUE CONVERTER, OIL PUMP & PIPINGS

PART NO.	QTY	MODEL/RESTRICTION	MODEL/RESTRICTION	MODEL/RESTRICTION	FROM-TO
19-934		HOSE,OIL			
BU55-19-934A	1				
19-970		BRACKET			
BU55-19-970A	1				
19-980A		SUPPORT,OIL PIPE			
BU29-19-980	2				
19-985A		CLIP,OIL PIPE			
BU29-19-985	2				
20-318A		BOLT			
BU27-19-838	1				
21-5C0		BREATHER			
N451-21-5C0	1				
21-677		RING,'O'			
BU01-21-677	1				
93-4405		HOSE			
99344-05150	1	L=15M CUT IT TO USE			

CAT. AUNA06-03

1998-07

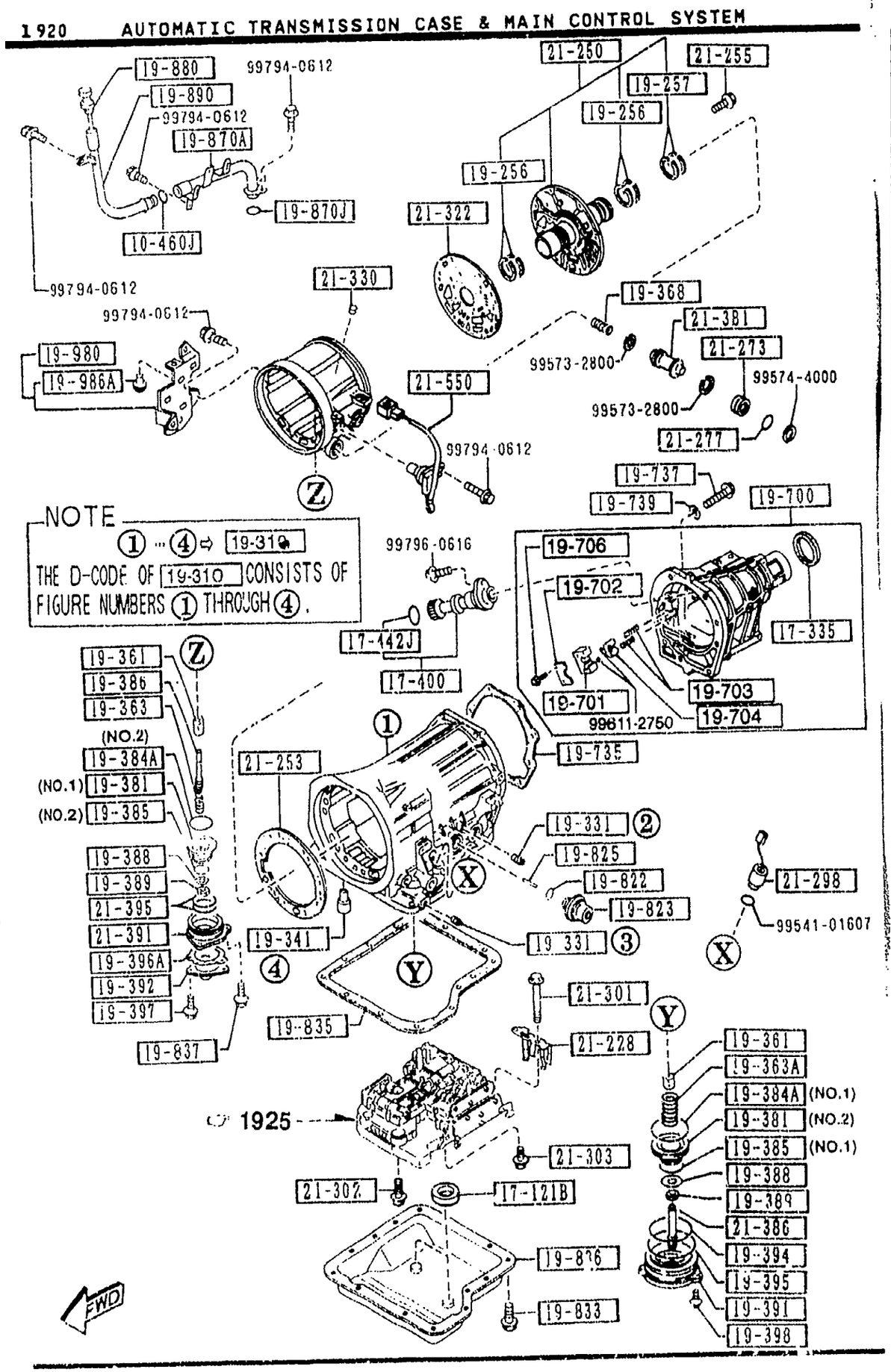

AUNA06

PART NO.	QTY	MODEL/RESTRICTION	MODEL/RESTRICTION	MODEL/RESTRICTION	FROM-TO
10-460J 99541-01201	1	RING,'O'			
17-121B F401-17-121	2	MAGNET			
17-335 M507-17-335A	1	SEAL,OIL			
17-400 N451-17-400	1	GEAR SET,DRIVEN-SPEED			
17-442J 1011-17-443	1	RING,'O'			
19-256 BU01-19-256	4	RING,SEAL			
19-257 BU01-19-257	2	RING,SEAL			
19-310 N451-19-310	1	CASE,T/MISSION			
19-331 0338-19-331A	2	PLUG,SQUARE HEAD			
19-341 0338-19-341	1	BOLT,ANCHOR END			
19-361 0338-19-361B	2	STRUT,BAND			
19-363 FT40-19-363	1	SPRING,PISTON RETURN			
19-363A BU10-19-363	1	SPRING,PISTON RETURN			
19-368 BU20-19-368	1	SPRING,CUSHION-PSTN. STEM			

1920 AUTOMATIC TRANSMISSION CASE & MAIN CONTROL SYSTEM

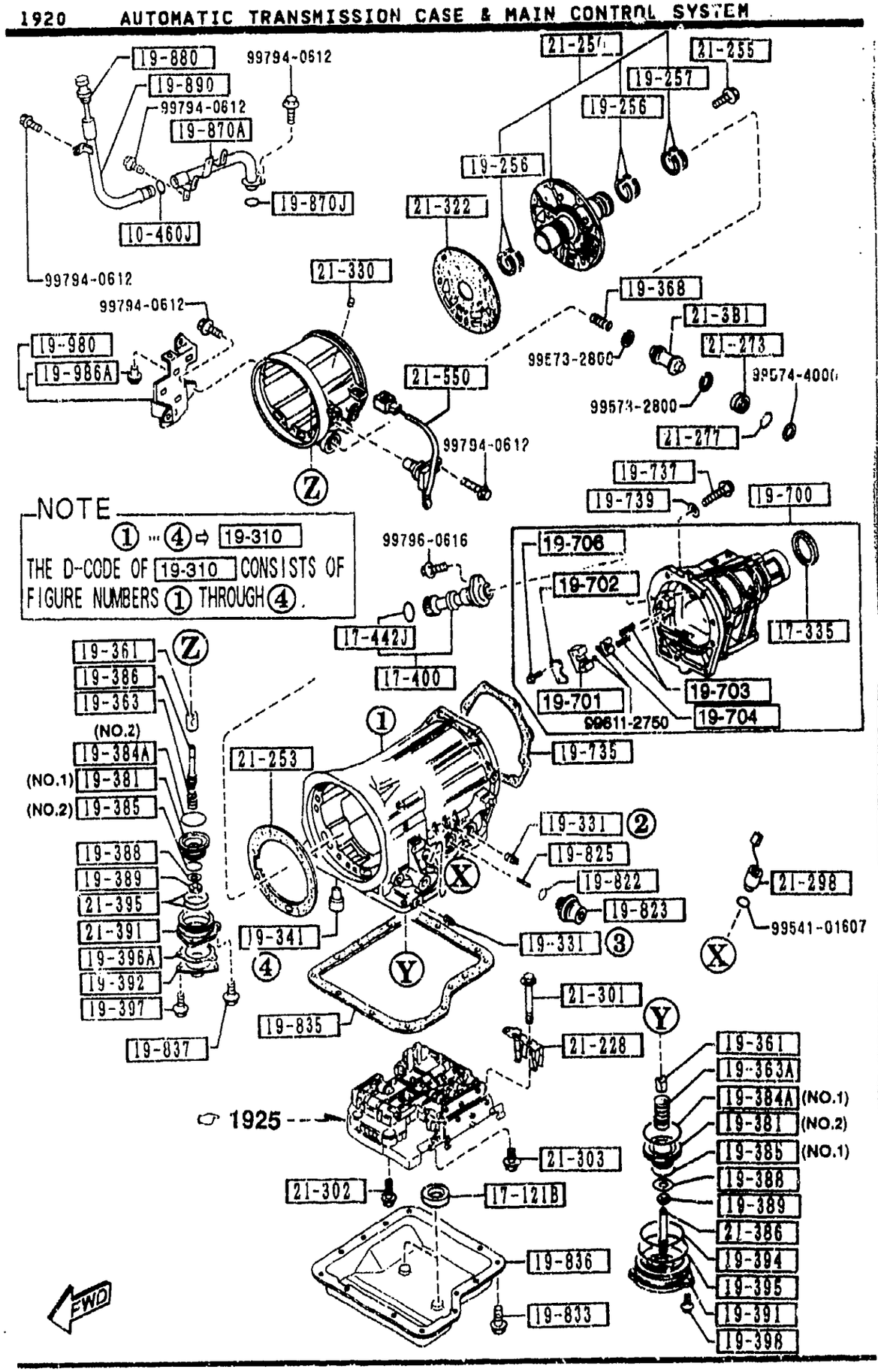

PART NO.	QTY	MODEL/RESTRICTION	MODEL/RESTRICTION	MODEL/RESTRICTION	FROM-TO
19-381		PISTON,BAND SERVO			
BV03-19-381	1	(ILLUST. NO.1)			
N451-19-381	1	(ILLUST. NO.2)			
19-384A		SEAL,PISTON			
BU10-19-384	1	(ILLUST. NO.1)			
BU55-19-384	1	(ILLUST. NO.2)			
19-385		SEAL,PISTON			
BU05-19-385	1	D=49.4MM (ILLUST. NO.1)			
0842-19-385	1	D=56MM (ILLUST. NO.2)			
19-386		STEM,PISTON			
0338-19-386A	1				
19-388		WASHER,PLAIN			
0338-19-388A	2				
19-389		NUT			
0338-19-389	2				
19-391		RETAINER,SERVO			
N451-19-391	1				
19-392		COVER,SERVO			
1758-19-392A	1				
19-394		SEAL,LATHE CUT			
0842-19-394	1				
19-395		RING,'O'			
0338-19-395	1				
19-396A		GASKET			
BU46-19-396	1	NON ASBESTOS			
19-397		BOLT			
1758-19-397	3				

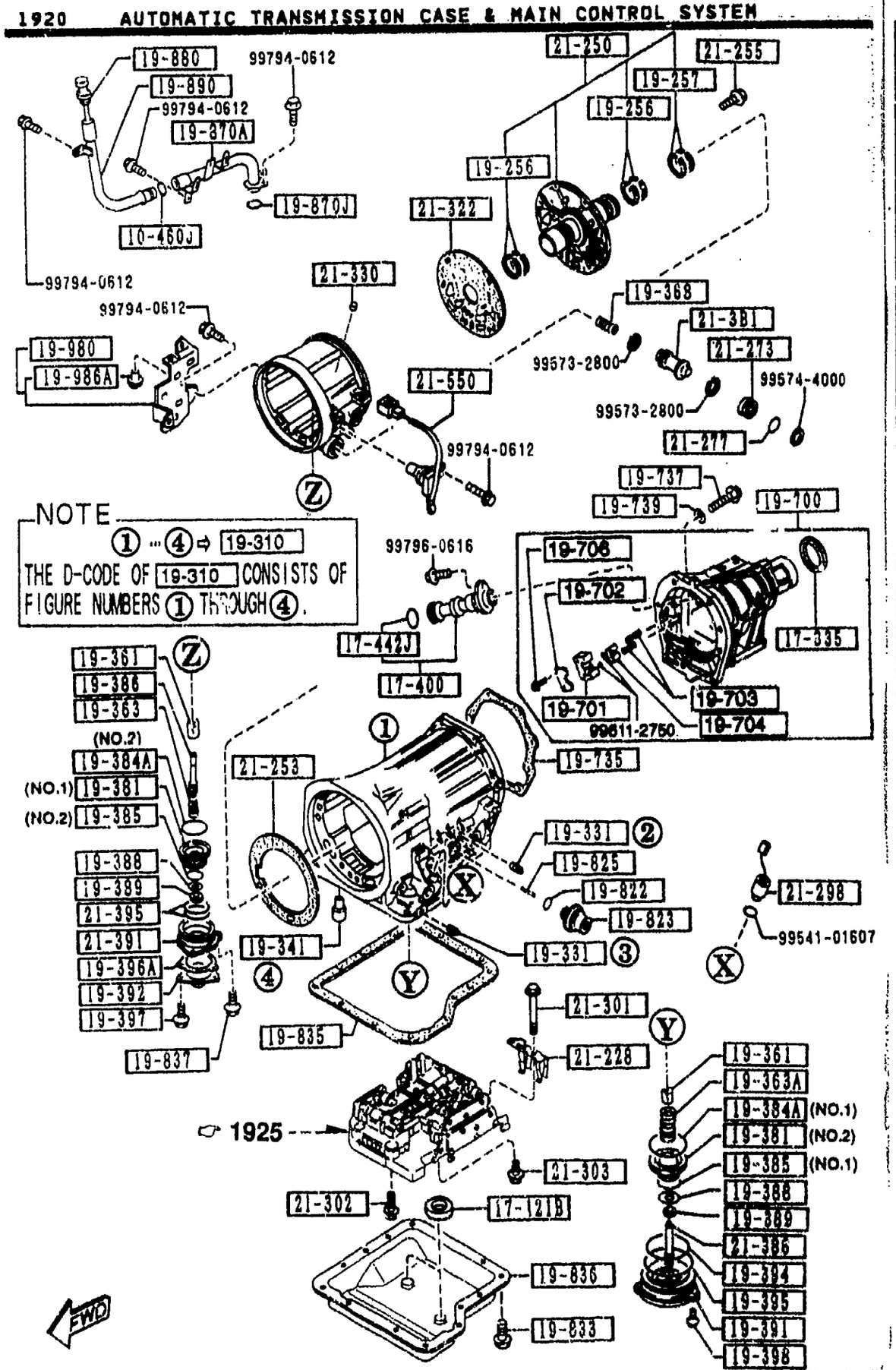

PART NO.	QTY	MODEL/RESTRICTION	MODEL/RESTRICTION	MODEL/RESTRICTION	FROM-TO
19-398		BOLT			
0338-19-398	3				
19-700		HOUSING,EXTENSION			
BUY2-19-7A0	1				
19-701		SUPPORTER,ACTUATOR			
BU17-19-701	1				
19-702		PLATE,RETAINING			
0338-19-702A	1				
19-703		SPRING,BALL PARK			
BU17-19-703	2				
19-704		RETAINER			
BU17-19-704	1				
19-706		BOLT			
0338-19-706	1				
19-735		GASKET,EXTENSION			
BT28-19-735	1	NON ASBESTOS			
19-737		BOLT			
BV12-19-737	8				-7709
*BV36-19-737	8				7709-
19-739		WASHER,PLAIN			
BV40-19-739	8				-7709
19-822		SEAL,'O'RING			
0338-19-822	1				
19-823		DIAPHRAGM,VACUUM			
BT07-19-823	1				
19-825		ROD,DIAPHRAGM			
BU55-19-825	1	L=29.75MM			

7709 NA35*V-738621

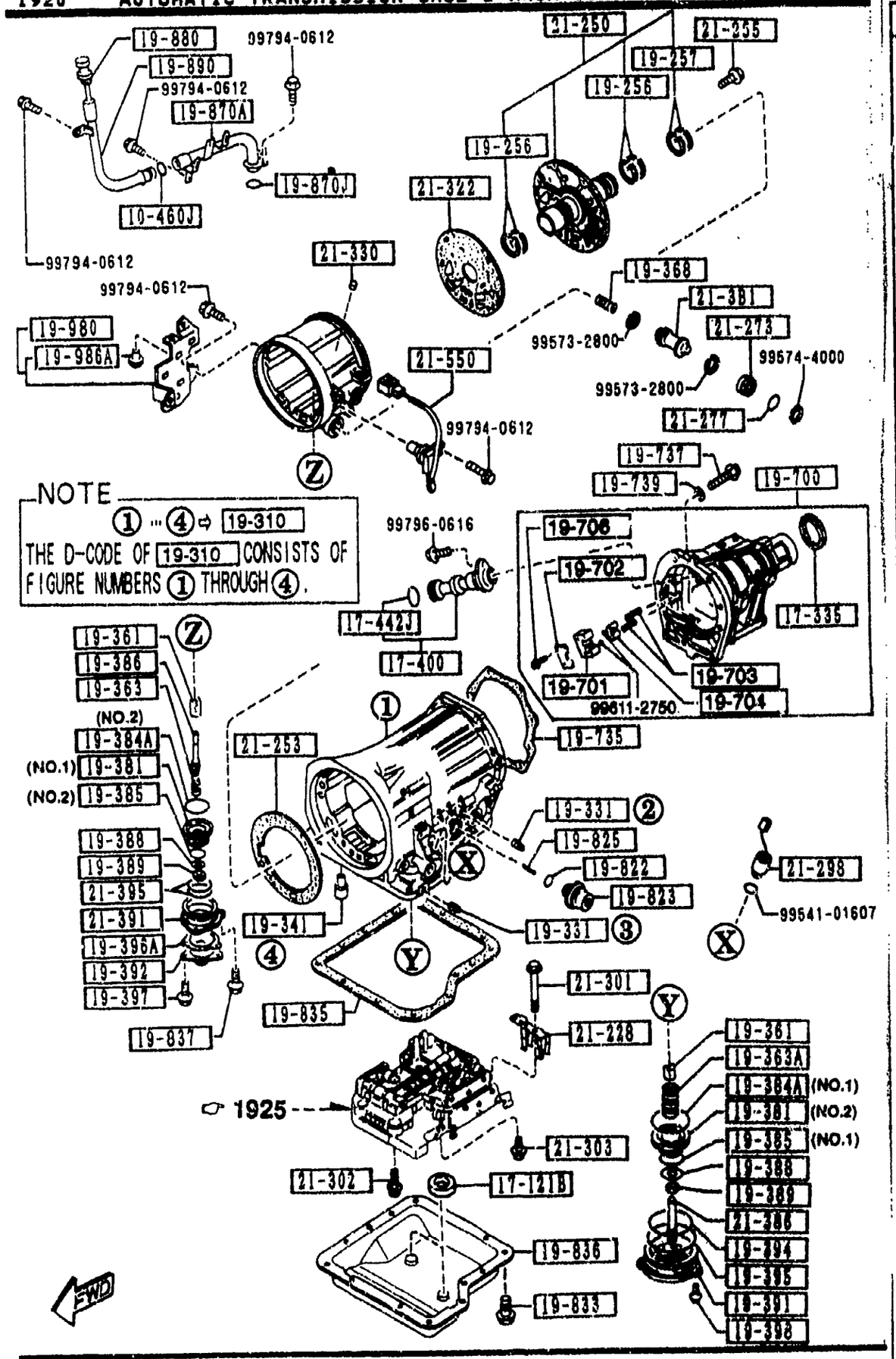

PART NO.	QTY	MODEL/RESTRICTION	MODEL/RESTRICTION	MODEL/RESTRICTION	FROM-TO
CONT'D					
0338-19-825	1	L=30.0MM			
0338-19-826	1	L=31.0MM			
0338-19-827	1	L=30.5MM			
0338-19-828	1	L=29.0MM			
0338-19-829	1	L=29.5MM			
19-833		BOLT,CONTROL VALVE			
BU91-19-833	13	L=15MM			
19-835		GASKET,OIL PAN			
BT28-19-835	1	NON ASBESTOS			
19-836		PAN,OIL			
BV02-19-836	1				
19-837		BOLT,OIL PAN			
0338-19-837	3				
19-870A		TUBE,FILLER			
BU55-19-870	1				
19-870J		RING,'O'			
99541-01601	1				
19-880		GAUGE,OIL LEVEL			
BV55-19-880A	1				
19-890		TUBE,OIL FILTER-UPPER			
BU55-19-890	1				
19-980		BRACKET			
BU55-19-980A	1				
19-986A		BUSH,RUBBER			
BV01-19-986	1				

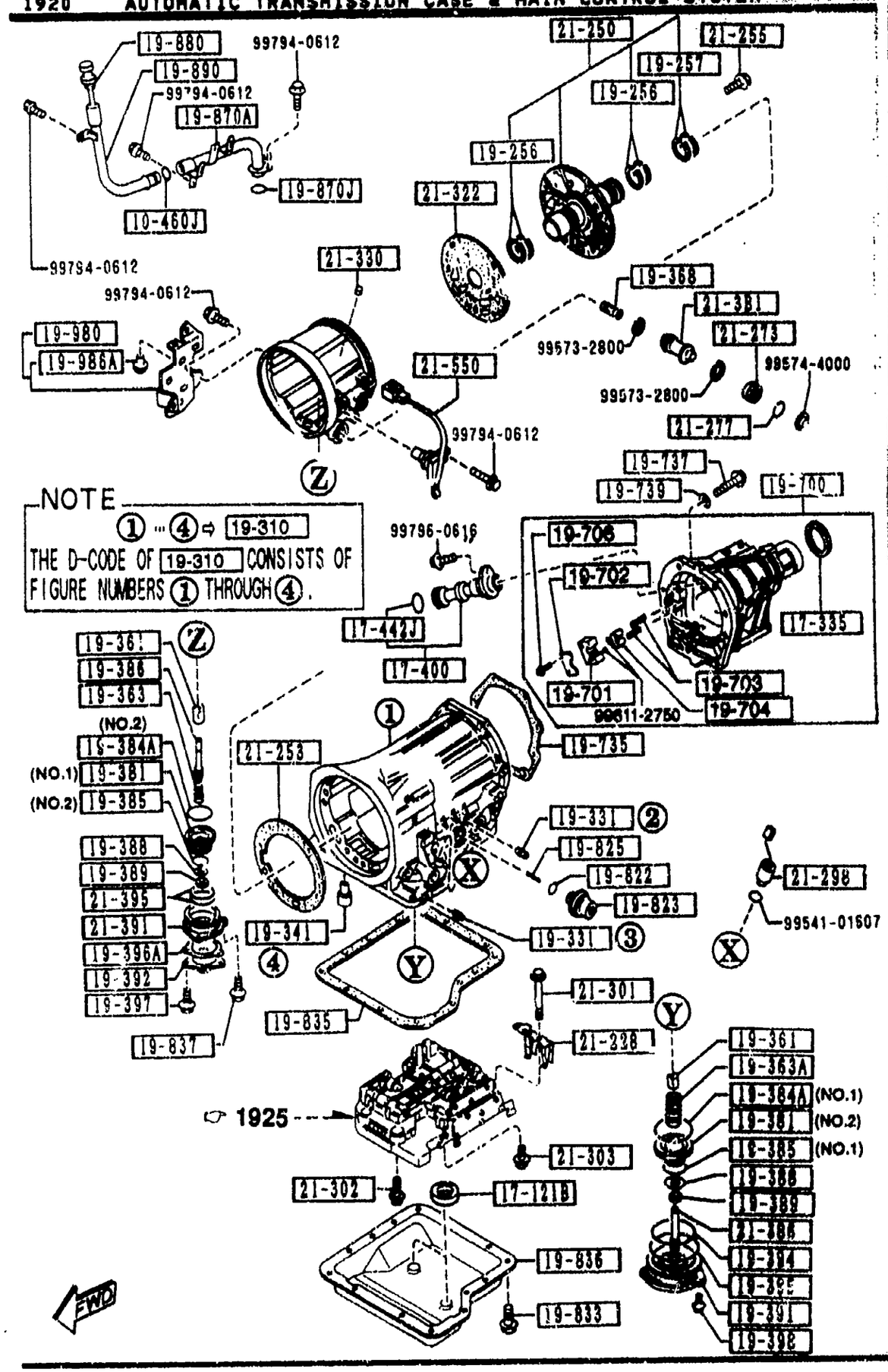

PART NO.	QTY	MODEL/RESTRICTION	MODEL/RESTRICTION	MODEL/RESTRICTION	FROM-TO
21-228		HOLDER,SOCKET			
BV01-21-228A	1				
21-250		SUPPORT,DRUM			
BV01-21-250A	1				
21-253		GASKET,DRUM SUPPORT			
BU46-21-2F3	1	NON ASBESTOS			
21-255		BOLT			
BU01-21-255	5				
21-273		PLUG,ACCUMULATOR			
BU01-21-273	1				
21-277		RING,'O'			
BU01-21-277	1				
21-298		COUPLER,SOLENOID VALVE			
BV09-21-2K0	1				
21-381		PISTON,ACCUMULATOR			
N451-21-381	1				
21-301		BOLT,CONTROL VALVE			
BV01-21-301	2				
21-302		BOLT,CONTROL VALVE			
BV01-21-302	4				
21-303		BOLT,CONTROL VALVE			
BV01-21-303	1				
21-322		GASKET,O/DRIVE CASE			
BU46-21-3C2	1				
21-330		VALVE,ONE WAY			
BV01-21-330	1				
21-386		STEEL PISTON BAND			

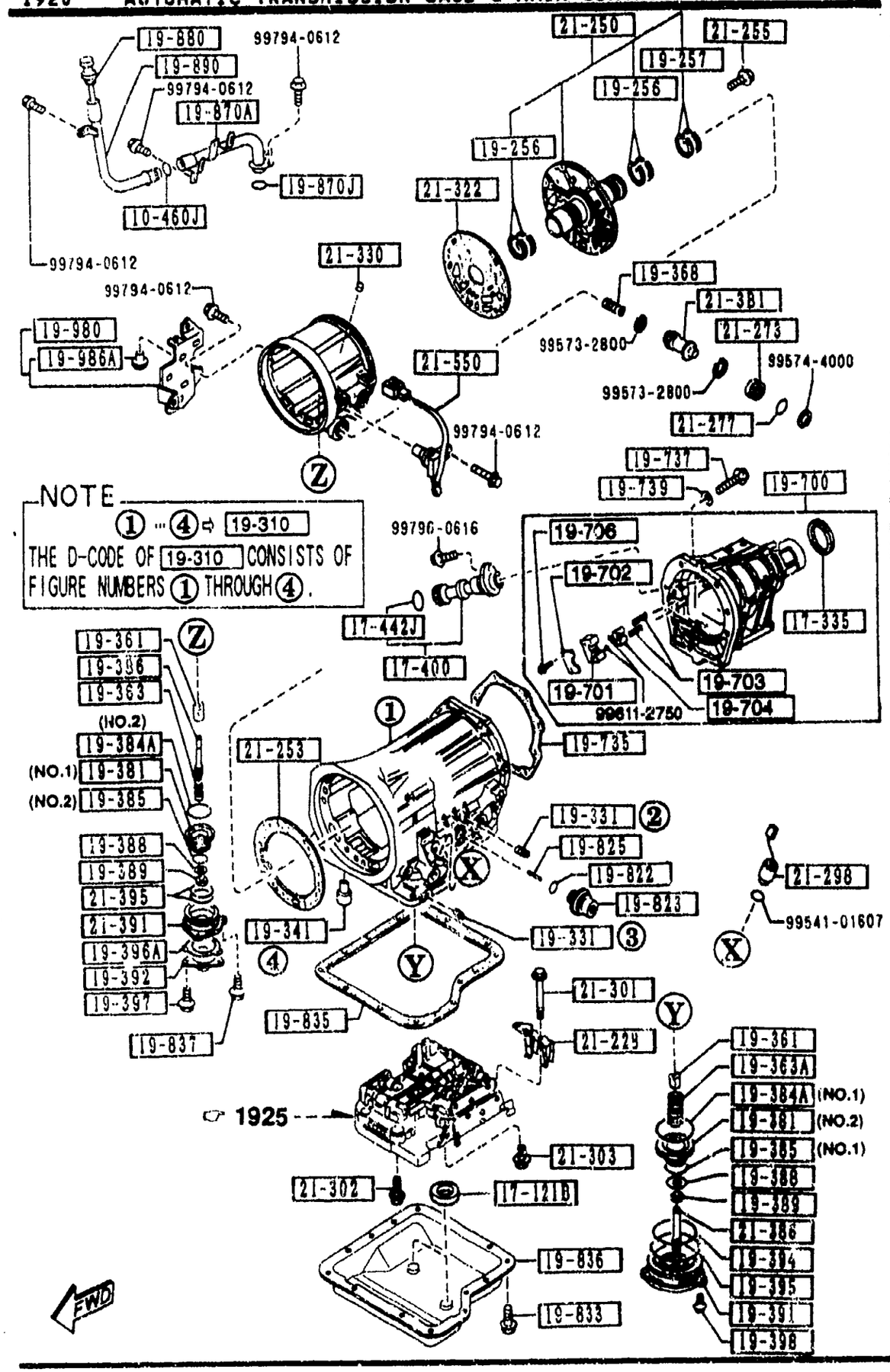

PART NO.	QTY	MODEL/RESTRICTION	MODEL/RESTRICTION	MODEL/RESTRICTION	FROM-TO
CONT'D					
BU01-21-386	1				
21-391		RETAINER,SERVO			
BV02-21-391	1				
21-395		RING,'O'			
BU01-21-395	2				
21-550		GENERATOR,PULSE			
N451-21-550A	1				

NOTE

① ··· ② ⇨ 19-750

THE D-CODE OF 19-750 CONSISTS OF FIGURE NUMBERS ① THROUGH ②.

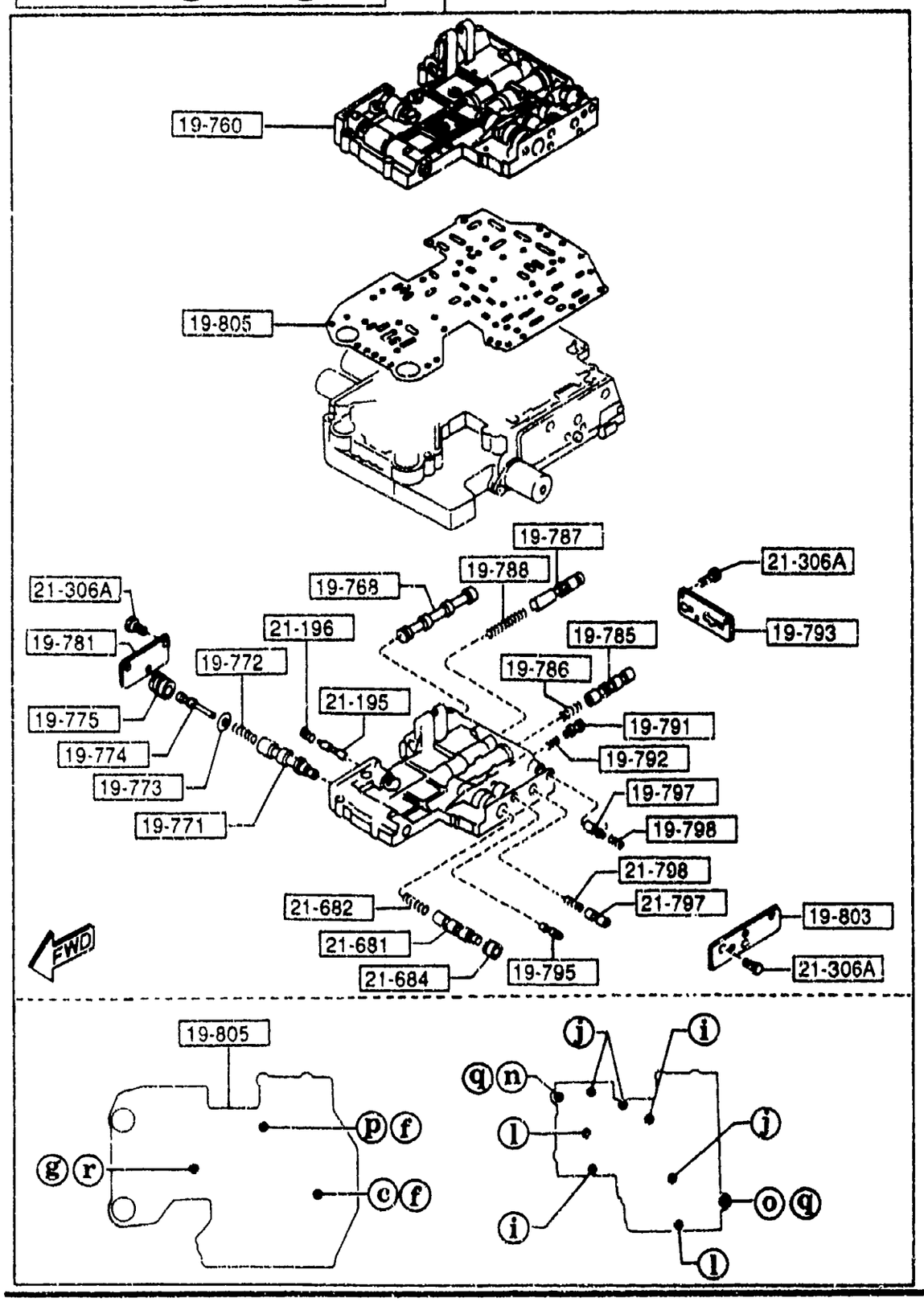

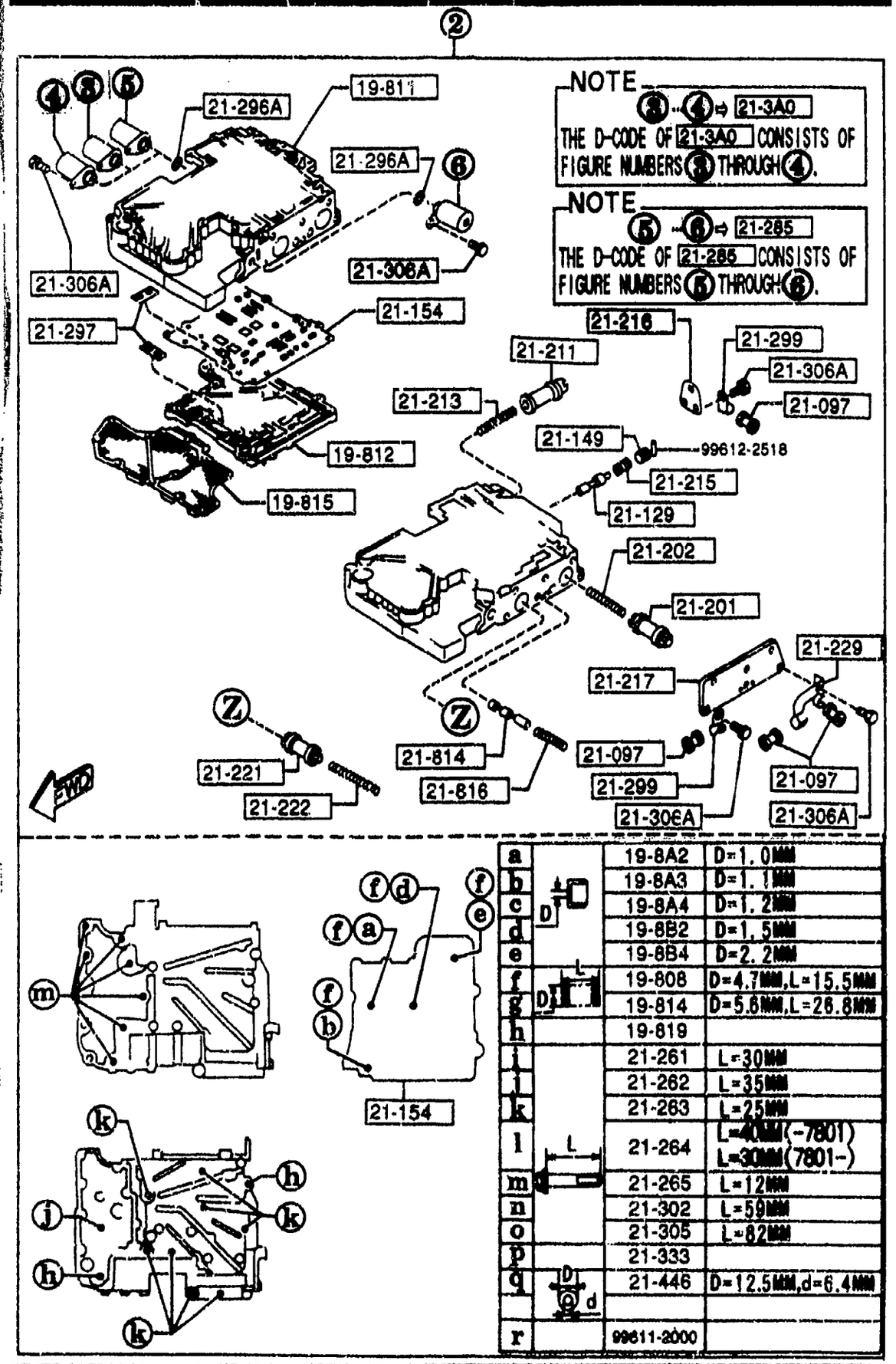

NOTE

③ ··· ④ ⇨ 21-3A0

THE D-CODE OF 21-3A0 CONSISTS OF FIGURE NUMBERS ③ THROUGH ④.

NOTE

⑤ ··· ⑥ ⇨ 21-285

THE D-CODE OF 21-285 CONSISTS OF FIGURE NUMBERS ⑤ THROUGH ⑥.

a		19-8A2	D=1.0MM
b		19-8A3	D=1.1MM
c		19-8A4	D=1.2MM
d		19-8B2	D=1.5MM
e		19-8B4	D=2.2MM
f		19-808	D=4.7MM,L=15.5MM
g		19-814	D=5.6MM,L=26.8MM
h		19-819	
i		21-261	L=30MM
j		21-262	L=35MM
k		21-263	L=25MM
l		21-264	L=40MM(-7801) L=30MM(7801-)
m		21-265	L=12MM
n		21-302	L=59MM
o		21-305	L=82MM
p		21-333	
q		21-446	D=12.5MM,d=6.4MM
r		99611-2000	

NOTE
① ··· ② ⇨ 19-750
THE D-CODE OF 19-750 CONSISTS OF FIGURE NUMBERS ① THROUGH ②.

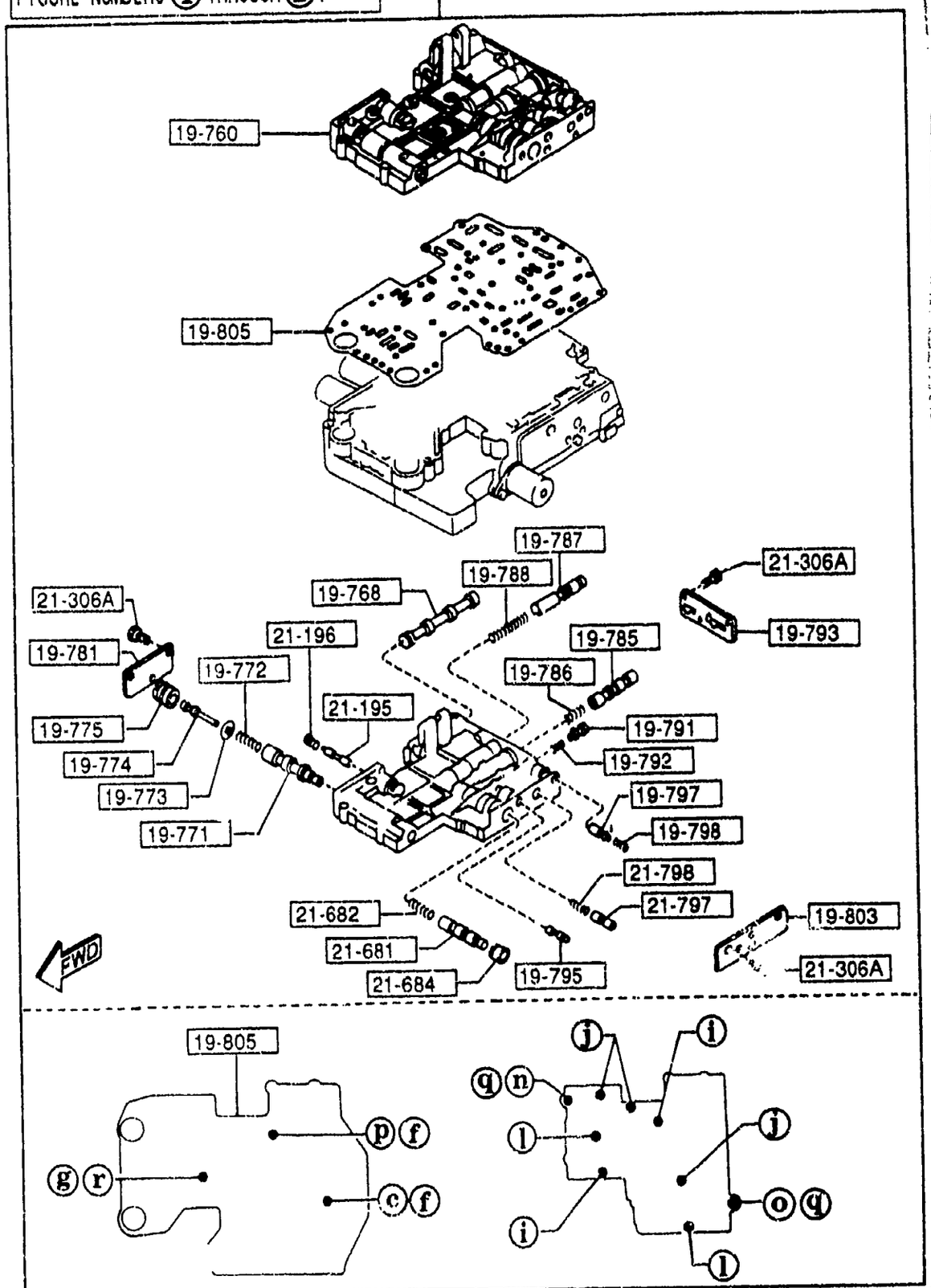

1925 -1 AUTOMATIC TRANSMISSION CONTROL VALVE

PART NO.	QTY	MODEL/RESTRICTION	MODEL/RESTRICTION	MODEL/RESTRICTION	FROM-TO
19-750 N451-19-750	1	VALVE,CONTROL			
19-760 BV01-19-760F	1	BODY,CONTROL VALVE-UP			
19-768 BU91-19-768	1	VALVE,MANUAL			
19-771 BV01-19-771	1	VALVE,REGULATOR			
19-772 0338-19-772	1	SPRING,REGULATOR			
19-773 0338-19-773	1	SEAT,REGULATOR SPRING			
19-774 N451-19-774	1	PLUG,REGULATOR			
19-775 N451-19-775	1	SLEEVE,REGULATOR PLUG			
19-781 1758-19-781	1	PLATE,SIDE'D'			
19-785 BV01-19-785	1	VALVE,1-2 SHIFT			
19-786 BV11-19-527	1	SPRING,1-2 SHIFT			
19-787 N451-19-787	1	VALVE,2-3 SHIFT			
19-788 N451-19-788	1	SPRING,2-3 SHIFT			
19-791 0338-19-791A	1	VALVE,MODIFIER			

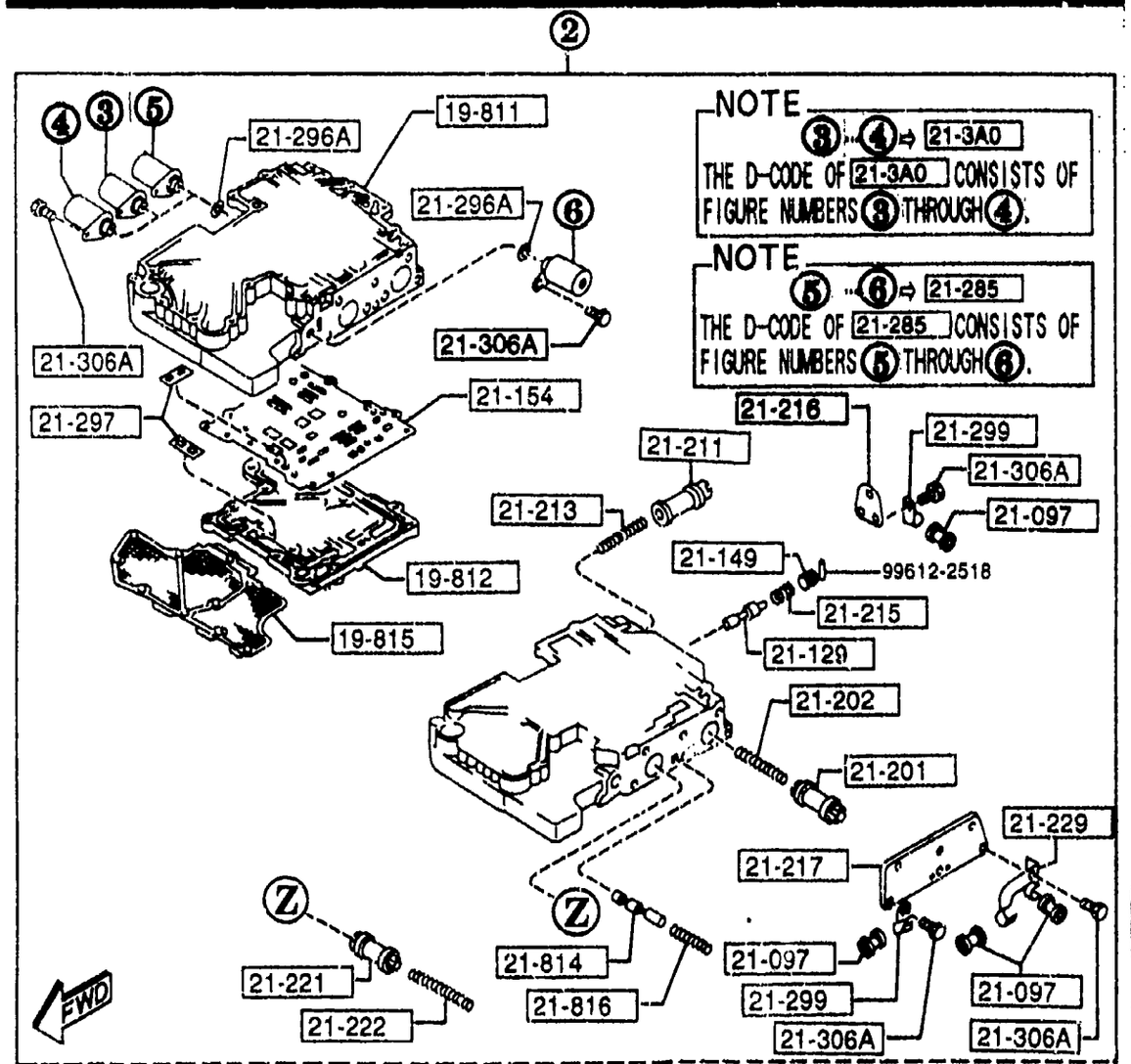

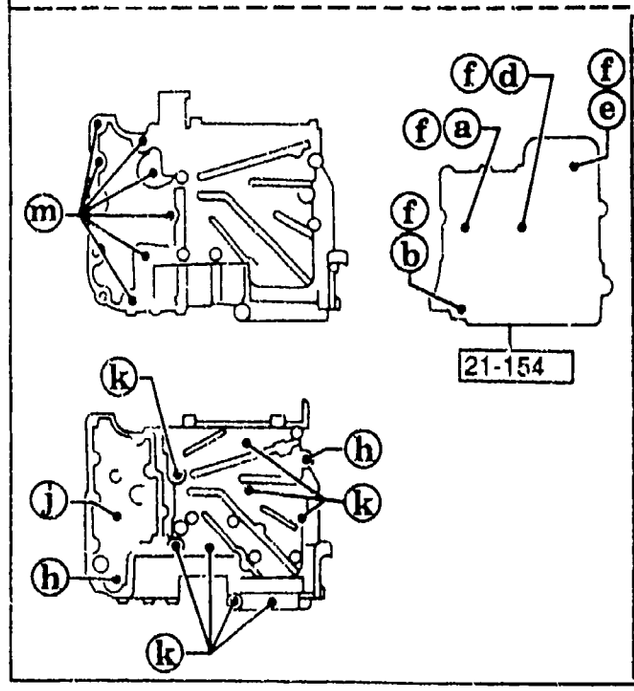

a		19-8A2	D=1.0MM
b	D	19-8A3	D=1.1MM
c		19-8A4	D=1.2MM
d		19-8B2	D=1.5MM
e		19-8B4	D=2.2MM
f	L	19-808	D=4.7MM,L=15.5MM
g	D	19-814	D=5.6MM,L=26.8MM
h		19-819	
i		21-261	L=30MM
j		21-262	L=35MM
k		21-263	L=25MM
l	L	21-264	L=40MM(-7801) L=30MM(7801-)
m		21-265	L=12MM
n		21-302	L=59MM
o		21-305	L=82MM
p		21-333	
q	D d	21-446	D=12.5MM,d=6.4MM
r		99611-2000	

PART NO.	QTY	MODEL/RESTRICTION	MODEL/RESTRICTION	MODEL/RESTRICTION	FROM-TO
19-792 BV01-19-792	1	SPRING,MODIFIER			
19-793 BV01-19-793	1	PLATE,SIDE'A'			
19-795 N451-19-795	1	VALVE,THROTTLE			
19-797 BV01-19-797A	1	VALVE,THROTTLE BACK-UP			
19-798 N451-19-798	1	SPRING,THROTTLE BACK-UP			
19-8A2 BV01-19-8A2	1	VALVE,ORIFICE CHECK			
19-8A3 BV01-19-8A3	1	VALVE,ORIFICE CHECK			
19-8A4 BV01-19-8A4	1	VALVE,ORIFICE CHECK			
19-8B2 BV01-19-8B2	1	VALVE,ORIFICE CHECK			
19-8B4 BV01-19-8B4	1	VALVE,ORIFICE CHECK			
19-803 BV01-19-803	1	PLATE,SIDE'B'			
19-805 BV17-19-805	1	PLATE,SEPARATOR			
19-808 0338-19-808	6	SPRING			
19-811 BV02-19-811C	1	BODY,VALVE LWR			

NOTE

① ··· ② ⇨ 19-750

THE D-CODE OF 19-750 CONSISTS OF FIGURE NUMBERS ① THROUGH ②.

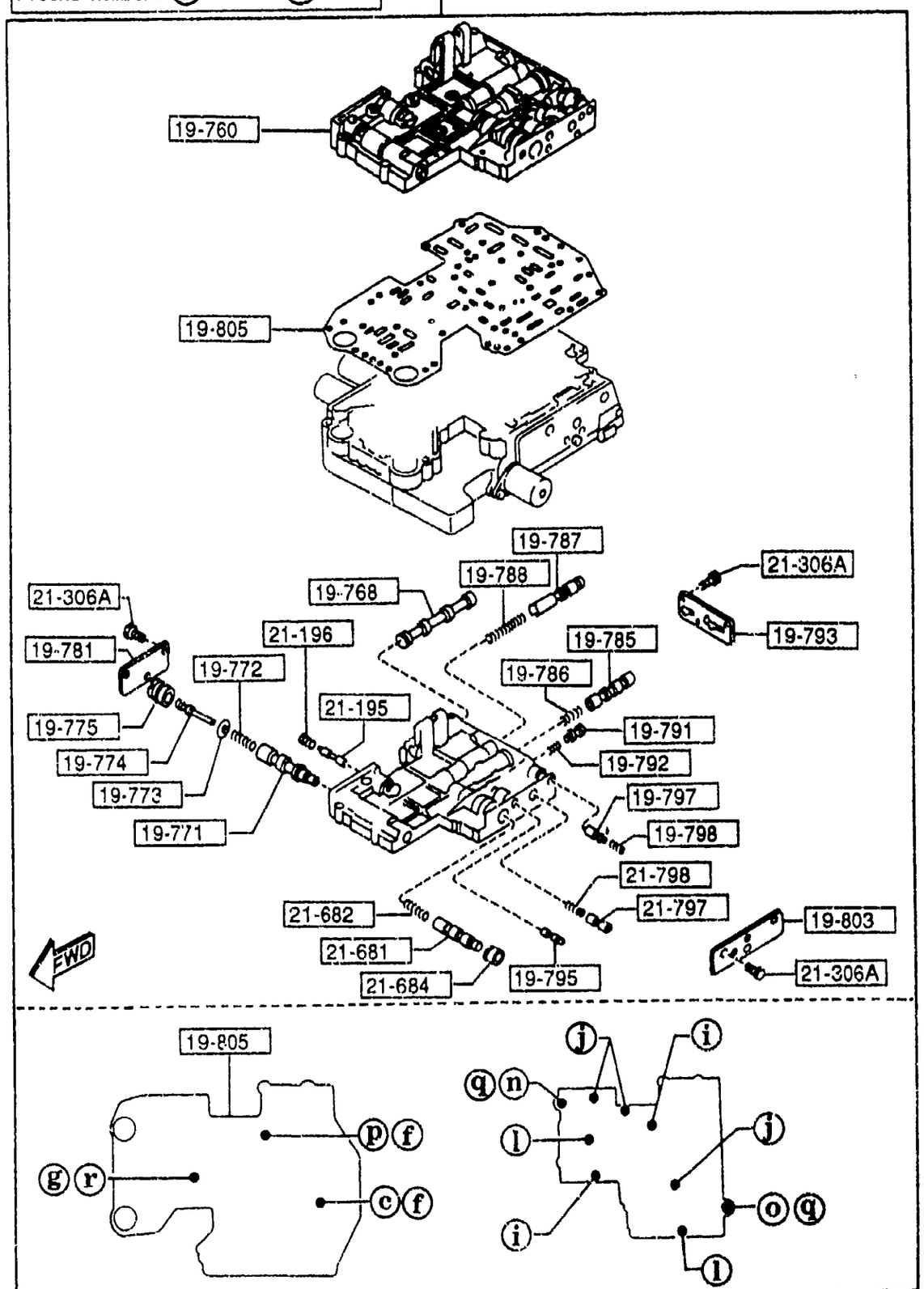

PART NO.	QTY	MODEL/RESTRICTION	MODEL/RESTRICTION	MODEL/RESTRICTION	FROM-TO
19-812		COVER,VALVE BODY			
BV01-19-812A	1				
19-814		SPRING			
0338-19-814	1				
19-815		STRAINER,OIL			
BV01-19-815	1				
19-819		NUT			
BV01-19-819	2				
21-097		PROTECTOR			
FU01-21-097	4				
21-129		VALVE,1-2 REDUCING			
BV01-21-129	1				
21-149		PLUG,STOPPER			
BV01-21-149A	1				
21-154		PLATE,SEPARATOR			
N451-21-154	1				
21-195		VALVE,REDUCING			
BV01-21-195	1				
21-196		SPRING,REDUCING			
BV01-21-196	1				
21-201		PISTON,ACCUM			
N451-21-201	1				
21-202		SPRING,ACCUM N-R			
BV06-21-202	1				
21-211		PISTON,N/D ACCUM			
N451-21-211	1				
21-213		SPRING,N/D ACCUM			
BV01-21-213	1				

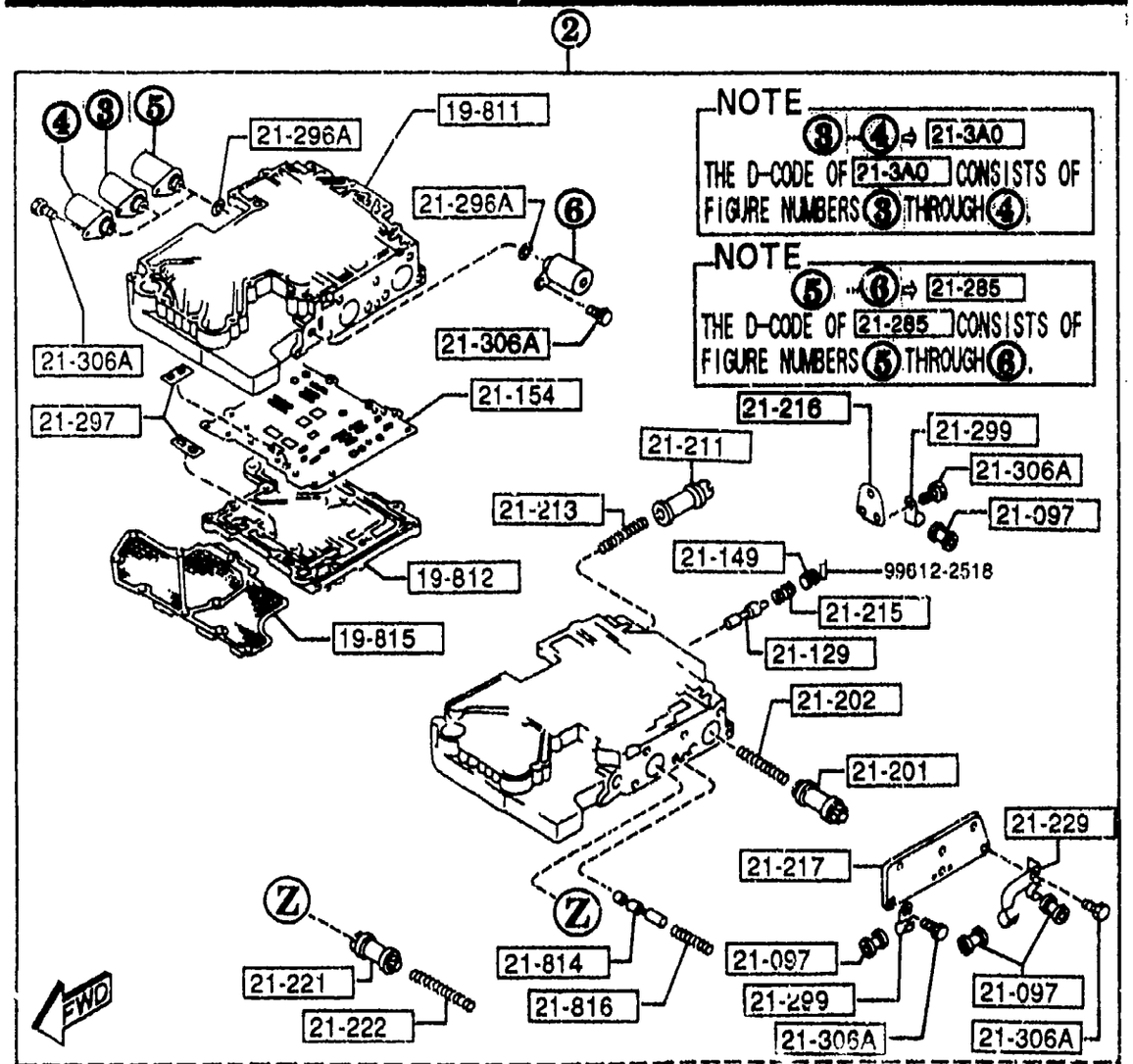

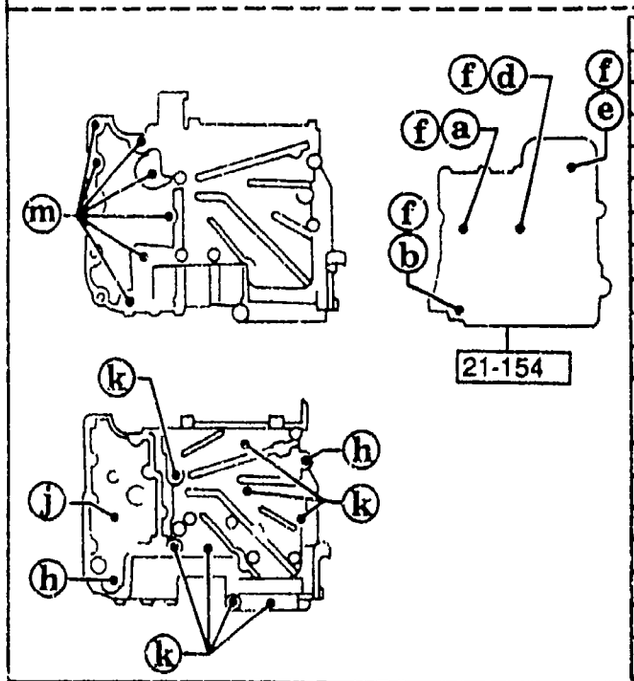

a		19-8A2	D=1.0MM
b		19-8A3	D=1.1MM
c		19-8A4	D=1.2MM
d		19-8B2	D=1.5MM
e		19-8B4	D=2.2MM
f		19-808	D=4.7MM,L=15.5MM
g		19-814	D=5.6MM,L=26.8MM
h		19-819	
i		21-261	L=30MM
j		21-262	L=35MM
k		21-263	L=25MM
l		21-264	L=40MM(-7801) L=30MM(7801-)
m		21-265	L=12MM
n		21-302	L=59MM
o		21-305	L=82MM
p		21-333	
q		21-446	D=12.5MM,d=6.4MM
r		99611-2000	

PART NO.	QTY	MODEL/RESTRICTION	MODEL/RESTRICTION	MODEL/RESTRICTION	FROM-TO
21-215		SPRING,BY-PASS			
BV02-21-215	1				
21-216		PLATE'E',SIDE			
BV01-21-216	1				
21-217		PLATE'F',SIDE			
BV01-21-217	1				
21-221		PISTON,1/2 ACCUM			
N451-21-221	1				
21-222		SPRING,ACCUM 1-2			
BV02-21-222B	1				
21-229		CLIP			
BV01-21-229A	1				
21-261		BOLT			
N451-21-261	2				
21-262		BOLT			
N451-21-262	4				
21-263		BOLT			
N451-21-263	8				
21-264		BOLT			
N451-21-264	2				-7801
*BV01-21-261	2				7801-
21-265		BOLT			
FU01-21-265C	7				
21-285		VALVE,SOLENOID			
BV01-21-280A	1				
21-296A		STRAINER,OIL			
BV01-21-296	4				

7801 NA35*V-739024

NOTE

① ··· ② ⇨ 19-750

THE D-CODE OF 19-750 CONSISTS OF FIGURE NUMBERS ① THROUGH ②.

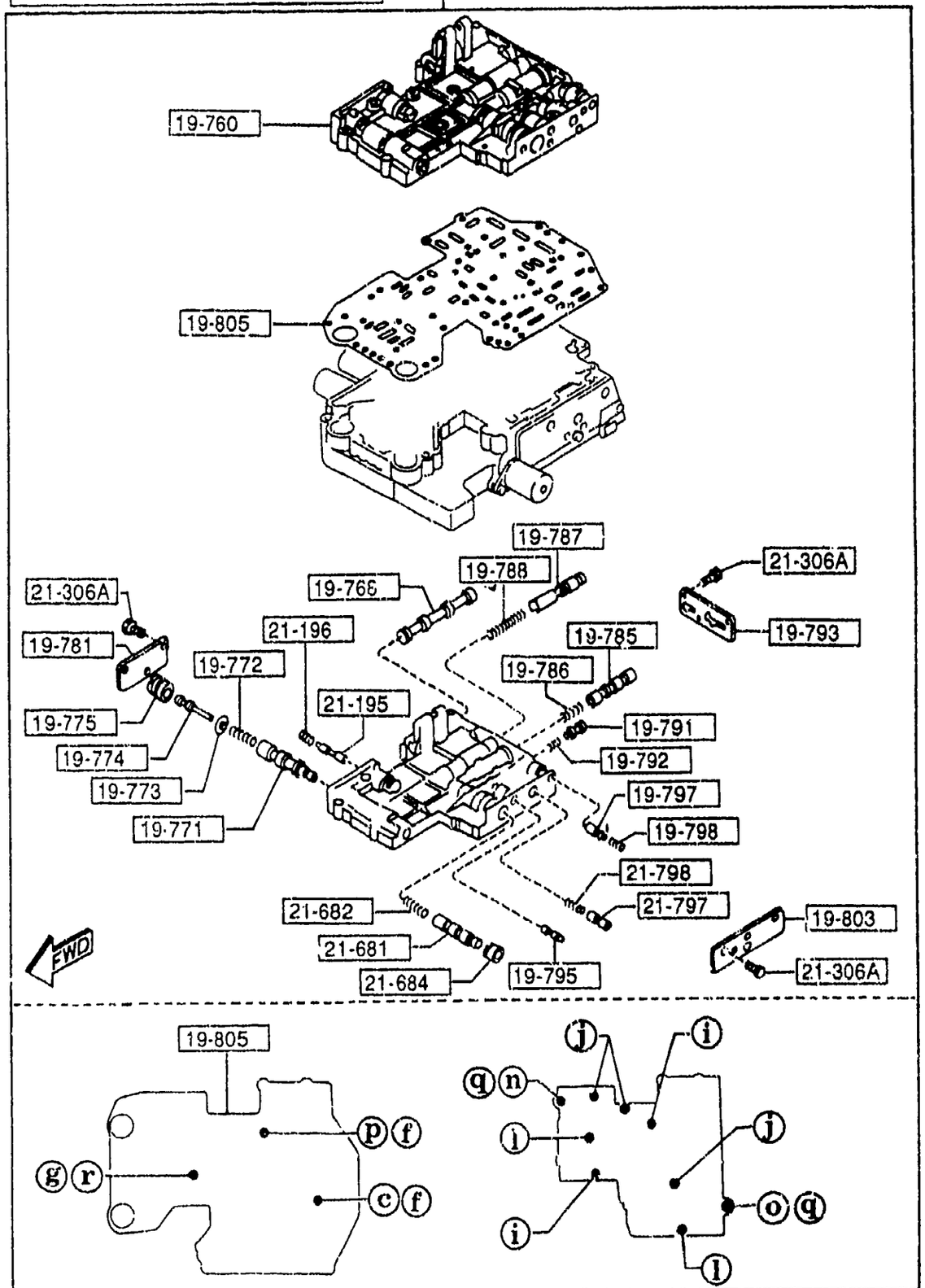

PART NO.	QTY	MODEL/RESTRICTION	MODEL/RESTRICTION	MODEL/RESTRICTION	FROM-TO
21-297 BV01-21-297	2	STRAINER,INNER			
21-299 BV01-21-299	2	CLIP			
21-3A0 BV02-21-3A0A	1	SOLENOID			
21-302 BV02-21-302	1	BOLT,CONTROL VALVE			
21-305 BV01-21-305B	1	BOLT			
21-306A BV01-21-306	22	BOLT			
21-333 BV01-21-333	1	VALVE,ONE WAY			
21-446 BV01-21-446	2	WASHER,DISHED			
21-681 BV01-21-681	1	VALVE,SHIFT 3-4			
21-682 BV01-21-682	1	SPRING,3-4 SHIFT			
21-684 BV01-21-684	1	VALVE,3-4 SHIFT-COAST			
21-797 BV01-21-797	1	VALVE,CONTROL BACK UP			
21-798 BV01-21-798	1	SPRING,BACK UP			
21-814 BV01-21-814	1	SPRING,3-2 TIMING			

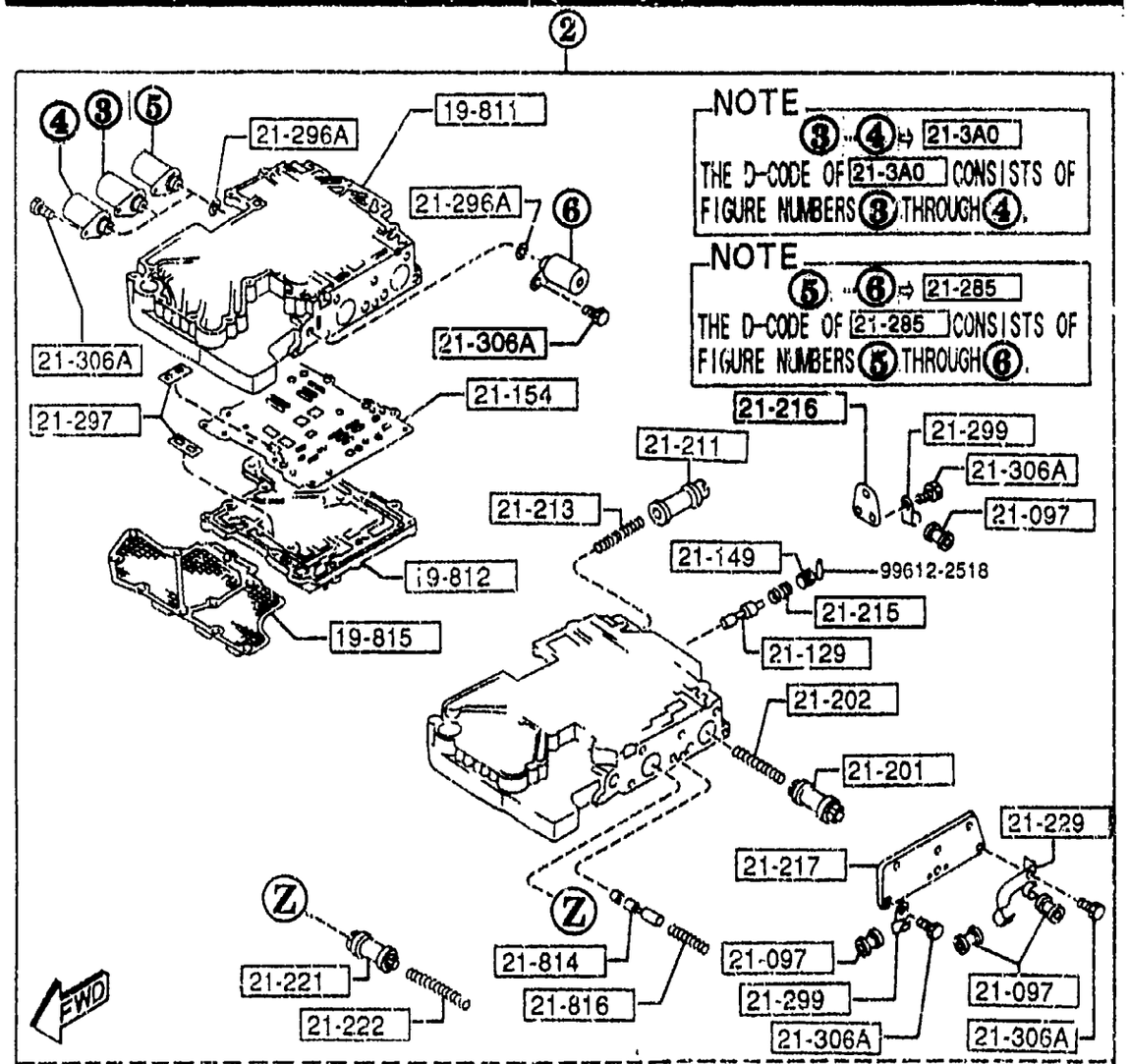

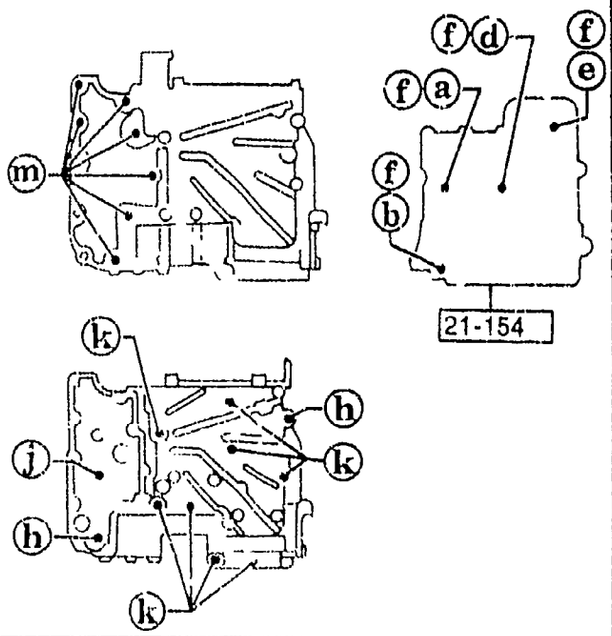

a		19-8A2	D=1.0MM
b		19-8A3	D=1.1MM
c		19-8A4	D=1.2MM
d		19-8B2	D=1.6MM
e		19-8B4	D=2.2MM
f		19-808	D=4.7MM,L=15.5MM
g		19-814	D=5.6MM,L=26.8MM
h		19-819	
i		21-261	L=30MM
j		21-262	L=35MM
k		21-263	L=25MM
l		21-264	L=40MM(-7801) L=30MM(7801-)
m		21-265	L=12MM
n		21-302	L=59MM
o		21-305	L=82MM
p		21-333	
q		21-446	D=12.5MM,d=6.4MM
r		99611-2000	

PART NO.	QTY	MODEL/RESTRICTION	MODEL/RESTRICTION	MODEL/RESTRICTION	FROM-TO
21-816		SPRING,3-2 TIMING			
BV01-21-816	1				

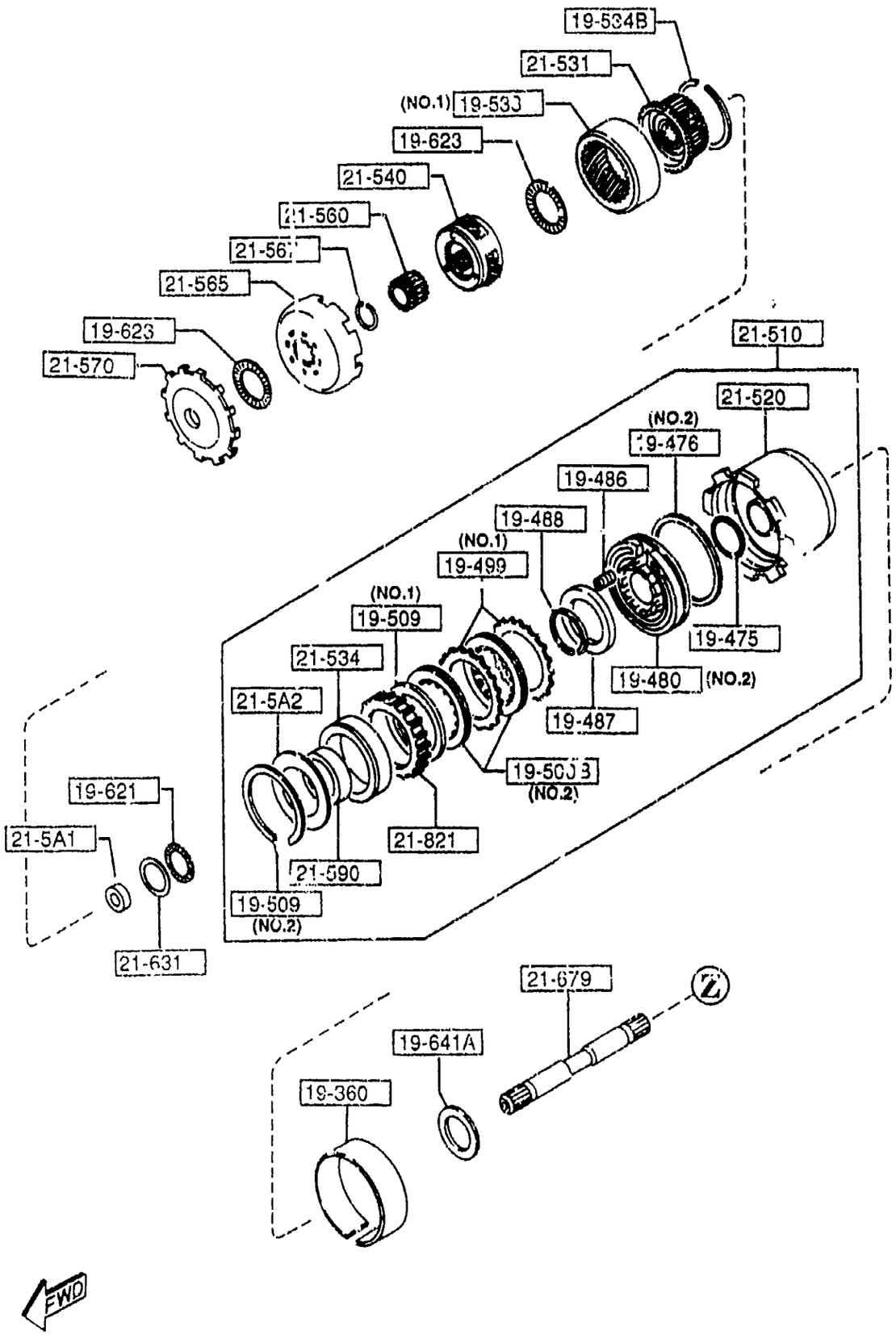

AUNA06

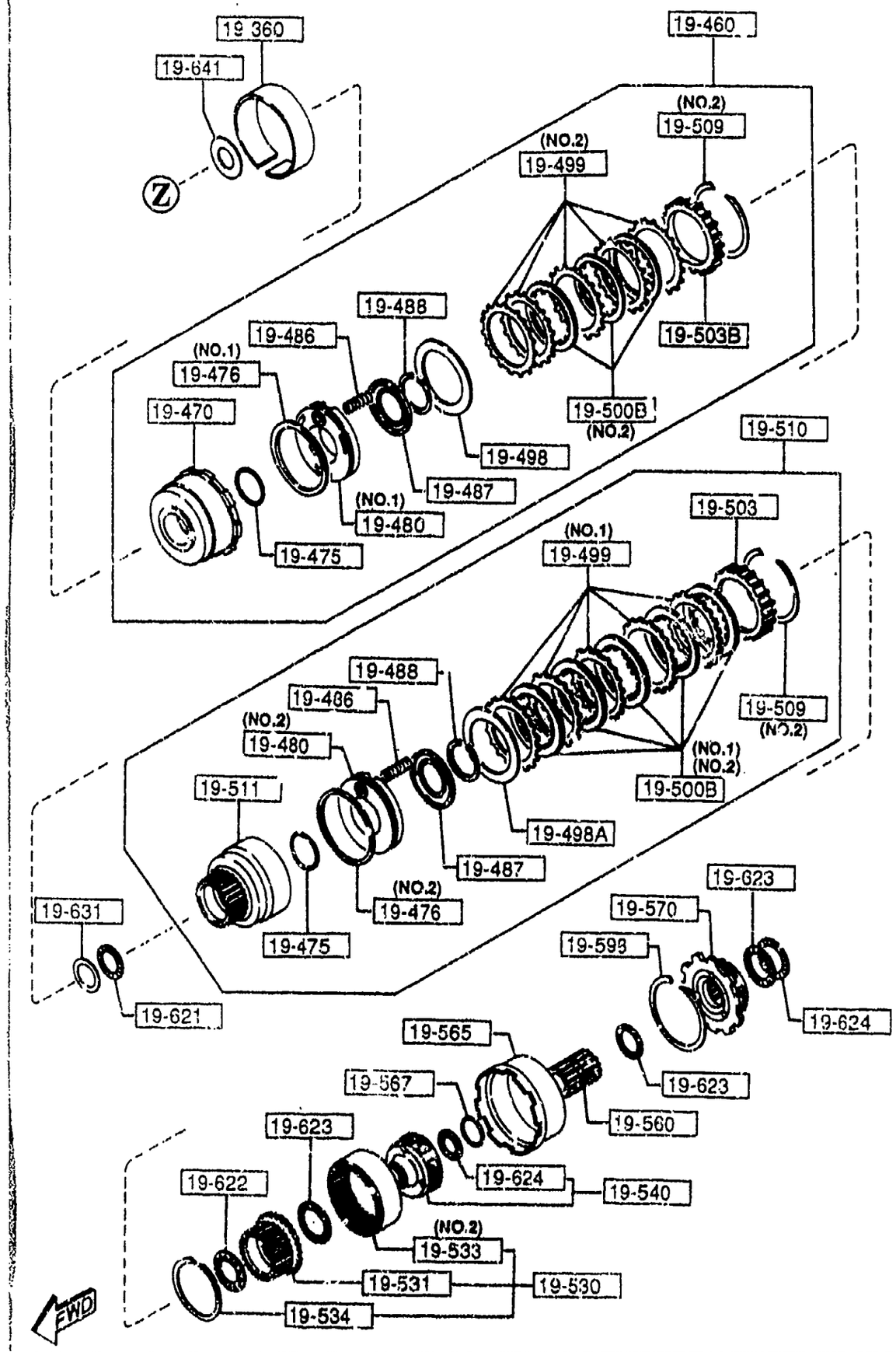

AUNA06

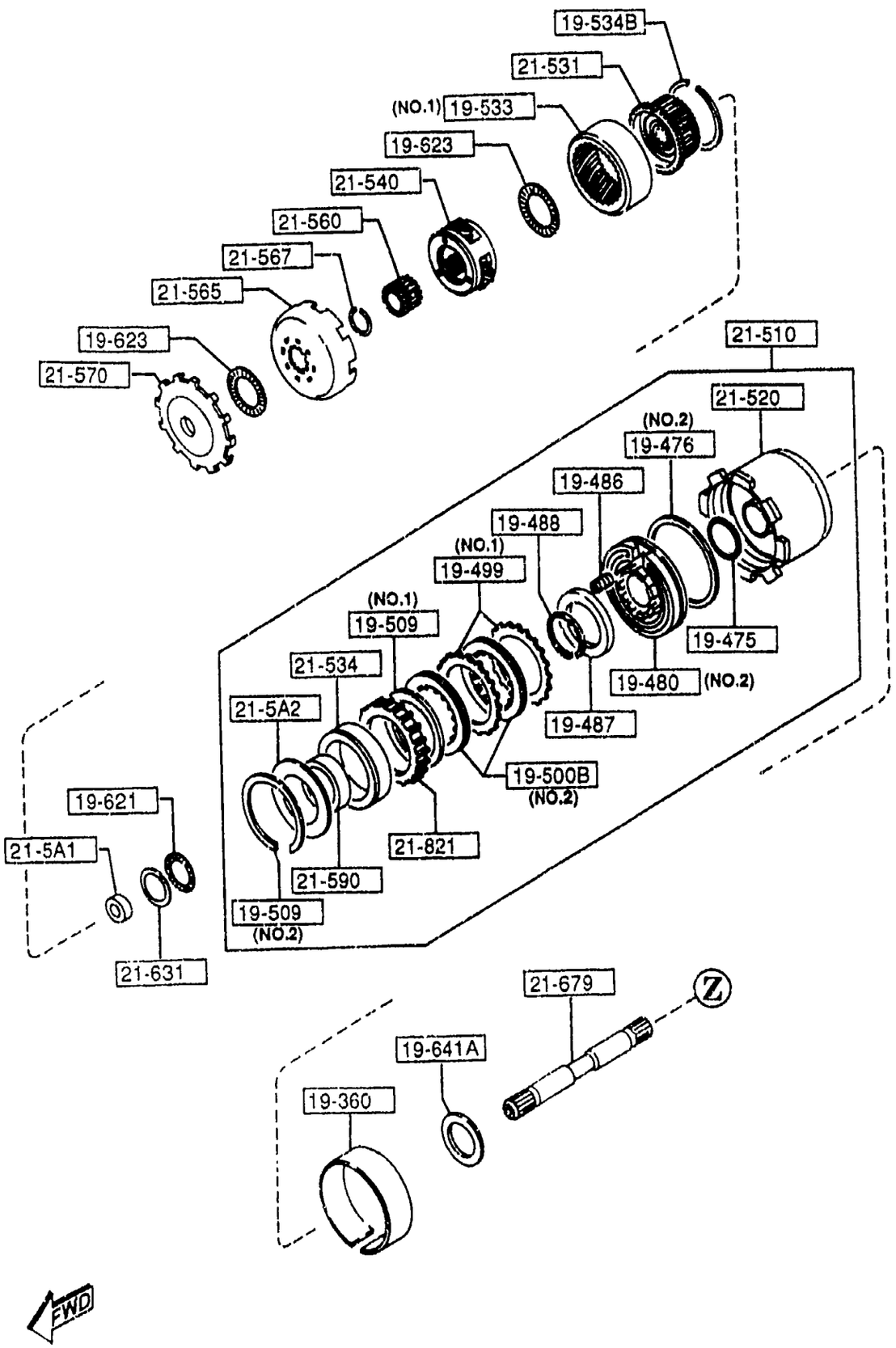

PART NO.	QTY	MODEL/RESTRICTION	MODEL/RESTRICTION	MODEL/RESTRICTION	FROM-TO
19-360		BAND,BRAKE			
0338-19-360B	2				
19-460		CLUTCH,FRONT			
N451-19-460	1				-7201
AN(N451-19-460A)					
N451-19-460A	1				7201-
19-470		DRUM,CLUTCH			
N451-19-470	1				-7201
AN(N451-19-470A)					
N451-19-470A	1				7201-
19-475		SEAL,'O'RING			
0338-19-475	3				
19-476		SEAL,LATHE CUT			
BV01-19-476	1	(ILLUST. NO.1)			
0338-19-476	2	(ILLUST. NO.2)			
19-480		PISTON,CLUTCH			
BV01-19-480	1	(ILLUST. NO.1)			
0338-19-480	2	(ILLUST. NO.2)			
19-486		SPRING,PISTON RETURN			
0338-19-486	25				
19-487		RETAINER,SPRING			
0338-19-487	3				
19-488		RING,SNAP			
0338-19-488	3				
19-498		PLATE,DISHED			
0338-19-498	1				
19-498A		PLATE,DISHED			
BU17-19-498	1				
19-499		PLATE,DRIVEN			
FT01-19-499	7	(ILLUST. NO.1)			

7201 NA35*V-730033

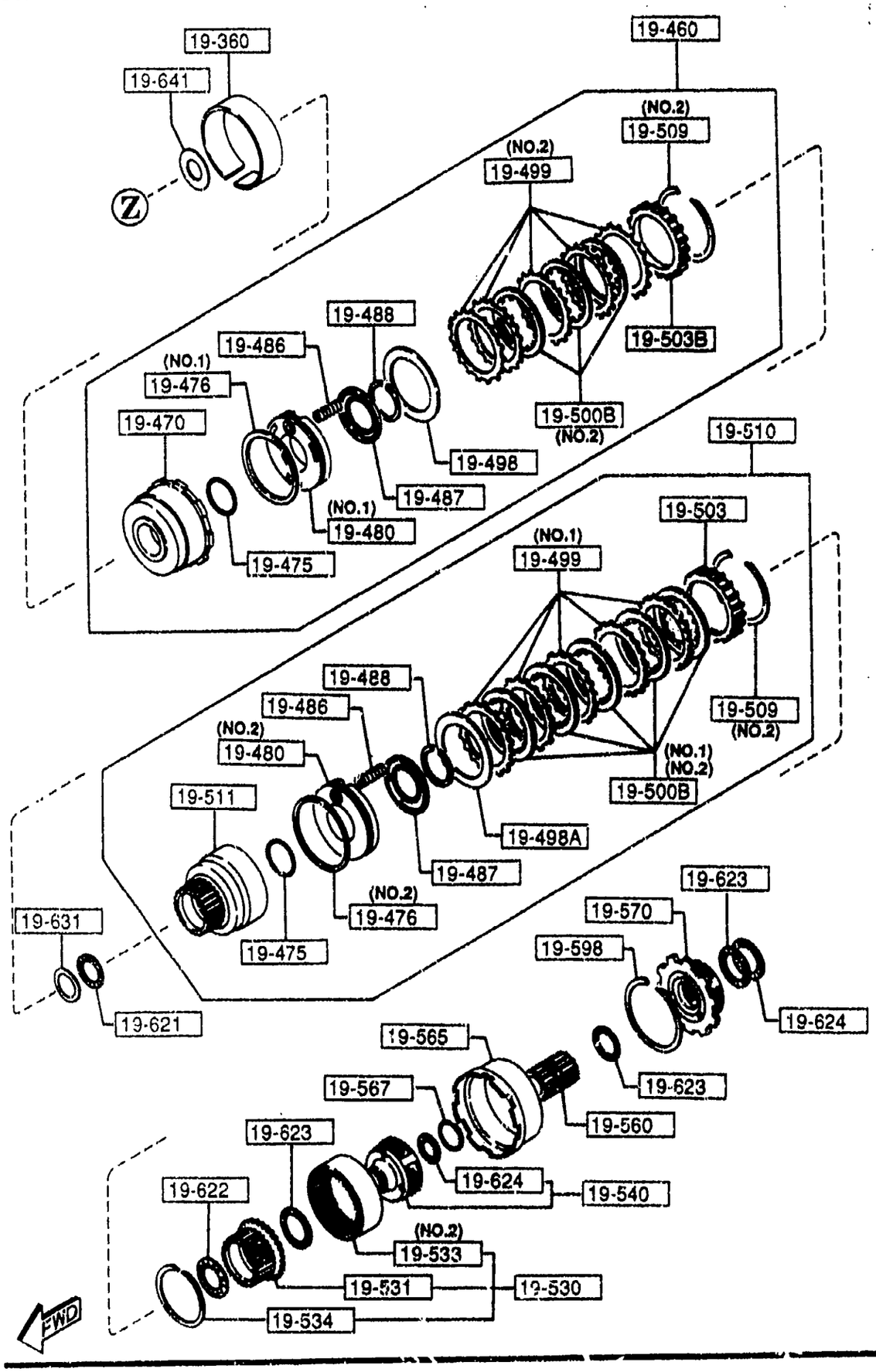

AUNA06

PART NO.	QTY	MODEL/RESTRICTION	MODEL/RESTRICTION	MODEL/RESTRICTION	FROM-TO
CONT'D					
0338-19-499	5	(ILLUST. NO.2)			
19-500B		PLATE,DRIVEN			
BU55-19-5J0	5	SELECTIVE USE (ILLUST. NO.1)			
BU17-19-500A	10	SELECTIVE USE (ILLUST. NO.2)			
19-503		PLATE,RETAINING			
0338-19-503	1	T=10.2MM			
BU17-19-504	1	T=9.4MM			
BU17-19-505	1	T=9.6MM			
BU17-19-506	1	T=9.8MM			
BU17-19-507	1	T=10MM			
BU17-19-508	1	T=10.2MM			
BU17-19-509	1	T=10.4MM			
19-503B		PLATE,RETAINING			
BV02-19-507	1	T=6.8MM			
3959-19-507	1	T=5.8MM			
BV02-19-508	1	T=7.0MM			
3959-19-508	1	T=6.0MM			
3959-19-509	1	T=6.2MM			
N451-19-505	1	T=6.4MM			-7801
BV02-19-506	1	T=6.6MM			-7801
*BU05-21-525	1	T=6.4MM			7801-
*BU05-21-526	1	T=6.6MM			7801-
19-509		RING,SNAP			

7801 NA35*V-739024

CAT. AUNA06-03

1998-07

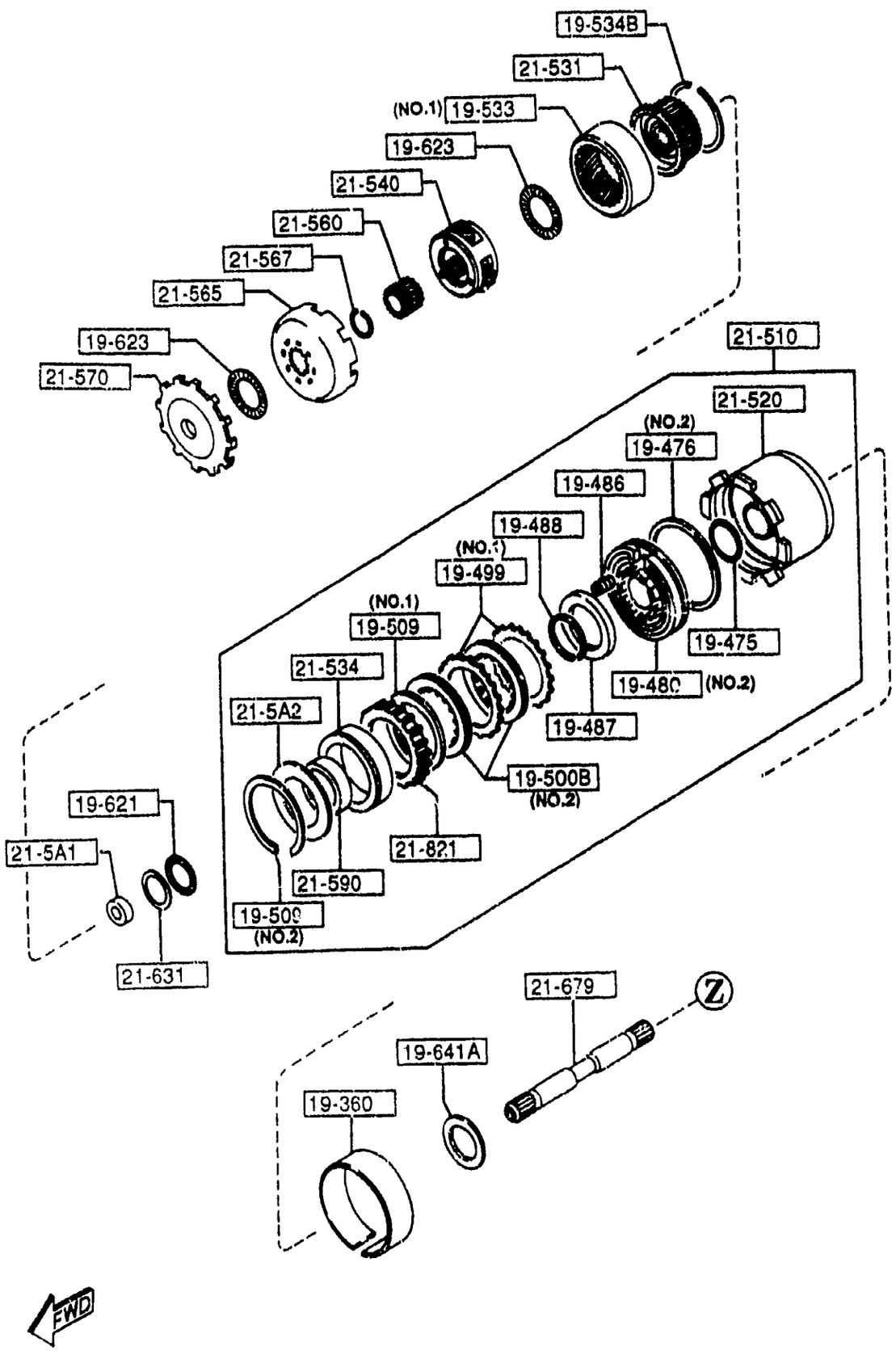

PART NO.	QTY	MODEL/RESTRICTION	MODEL/RESTRICTION	MODEL/RESTRICTION	FROM-TO
CONT'D					
BV01-19-509	1	(ILLUST. NO.1)			
0338-19-509	3	T=2.0MM (ILLUST. NO.2)			
19-510		CLUTCH,REAR			
BU17-19-510A	1				
19-511		DRUM,REAR CLUTCH			
1758-19-511A	1				
19-530		HUB,REAR CLUTCH			
0338-19-530	1				
19-531		HUB,REAR CLUTCH			
0338-19-531	1				
19-533		GEAR,INTERNAL			
BV01-19-533	1	(ILLUST. NO.1)			
0338-19-533A	1	(ILLUST. NO.2)			
19-534		RING,SNAP			
0338-19-534	1				
19-534B		RING,SNAP			
BU03-19-534	1				
19-540		CARRIER,FRONT			
0338-19-540	1				
19-560		GEAR,SUN			
0338-19-560	1				
19-565		SHELL,CONNECTING			
BU27-19-565	1				
19-567		RING,SNAP			
0338-19-567	1				
19-570		CARRIER,REAR			
0338-19-570	1				

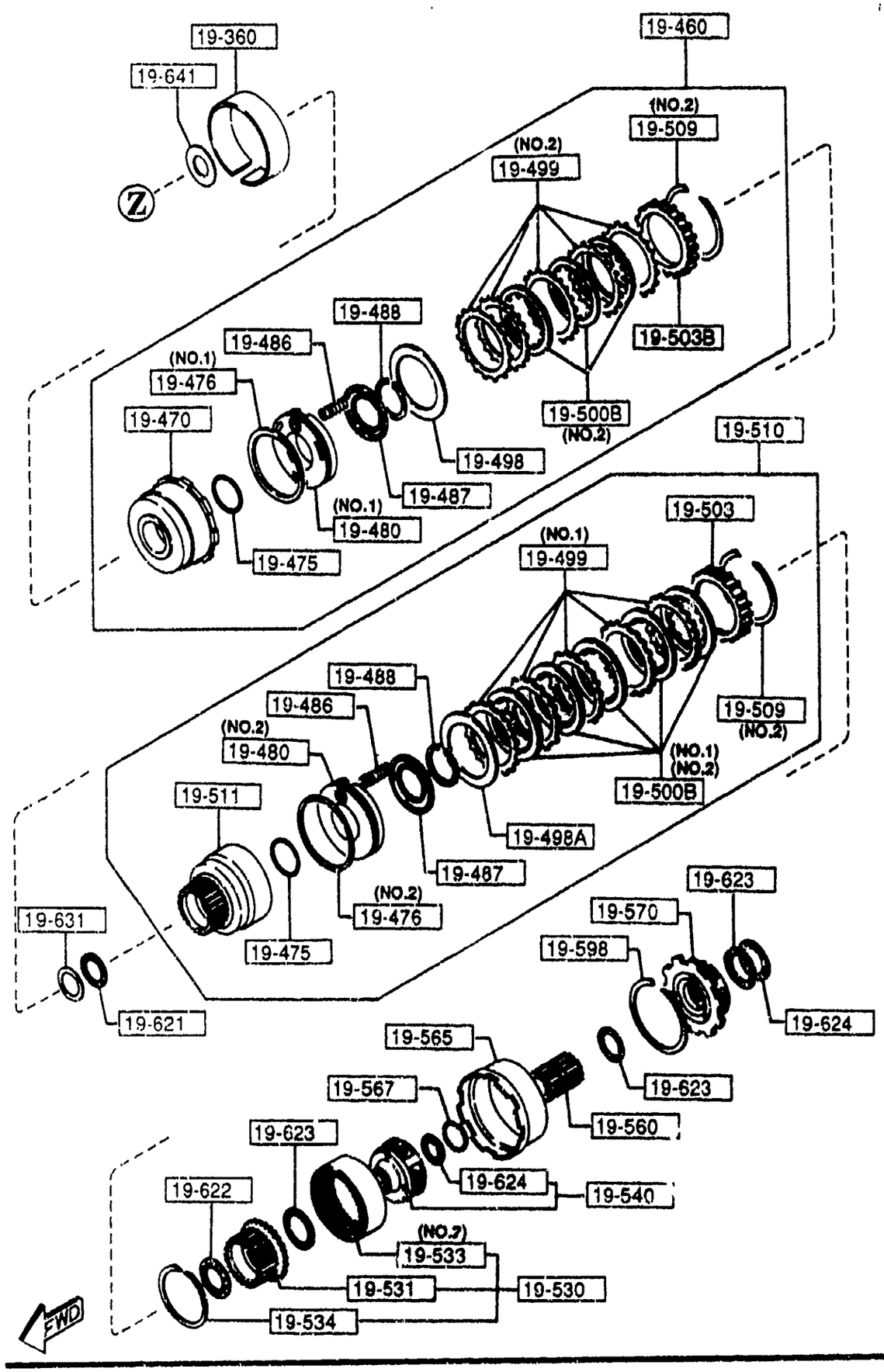

PART NO.	QTY	MODEL/RESTRICTION	MODEL/RESTRICTION	MODEL/RESTRICTION	FROM-TO
19-598		RING,SNAP			
0338-19-598	1				
19-621		BEARING,NEEDLE			
0338-19-621	2				
19-622		BEARING,NEEDLE			
BU91-19-622	1	D=34.7MM			
FT01-19-622	1	D=33.8MM			
19-623		BEARING,NEEDLE			
0338-19-623A	5				
19-624		BEARING,NEEDLE			
0338-19-624	2				
19-631		RACE,BRG.PUMP COVER			
0338-19-631	1	T=1.2MM			
0338-19-632	1	T=1.4MM			
0338-19-633	1	T=1.6MM			
0338-19-634	1	T=1.8MM			
0338-19-635	1	T=2.0MM			
0338-19-636	1	T=2.2MM			
19-641		WASHER,FRONT CLUTCH			
BV01-19-6C1	1	T=0.8MM			
BV01-19-6C2	1	T=1MM			
BV01-19-6C3	1	T=1.2MM			
BV01-19-6C4	1	T=1.4MM			
BV01-19-6C5	1	T=1.6MM			
BV01-19-6C6		T=1.8MM			

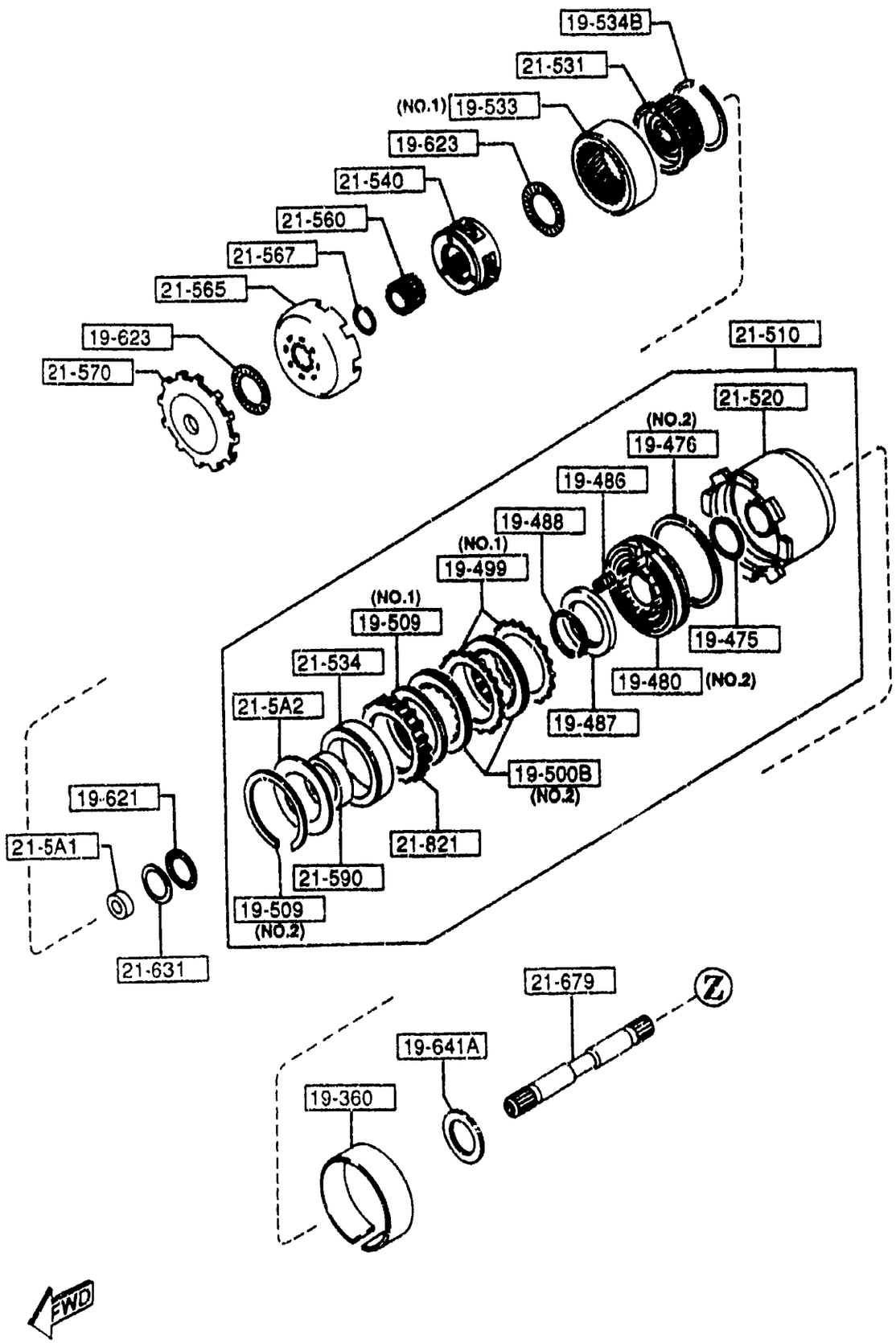

PART NO.	QTY	MODEL/RESTRICTION	MODEL/RESTRICTION	MODEL/RESTRICTION	FROM-TO
CONT'D					
	1				
BV01-19-6C7	1	T=2MM			
BV01-19-6C8	1	T=2.2MM			
19-641A		WASHER			
BV03-19-6C1	1	T=0.8MM			
BV03-19-6C2	1	T=1MM			
BV03-19-6C3	1	T=1.2MM			
BV03-19-6C4	1	T=1.4MM			
BV03-19-6C5	1	T=1.6MM			
BV03-19-6C6	1	T=1.8MM			
BV03-19-6C7	1	T=2MM			
BV03-19-6C8	1	T=2.2MM			
21-5A1		SLEEVE,SEAL-O.D.CARRIER			
BV01-21-5A1	1				
21-5A2		RACE,SIDE-ONE WAY CLUTCH			
BV01-21-5A2	1	T=0.6MM			
BV01-21-5A3	1	T=0.8MM			
BV01-21-5A4	1	T=1MM			
BV01-21-5A5	1	T=1.2MM			
BV01-21-535	1	T=0.4MM			
21-510		CLUTCH,DIRECT			
BV01-21-510B	1				
21-520		DRUM,DIRECT			
BV01-21-530C	1				

1930 AUTOMATIC TRANSMISSION CLUTCHES & PLANETARY GEARS (2/2)

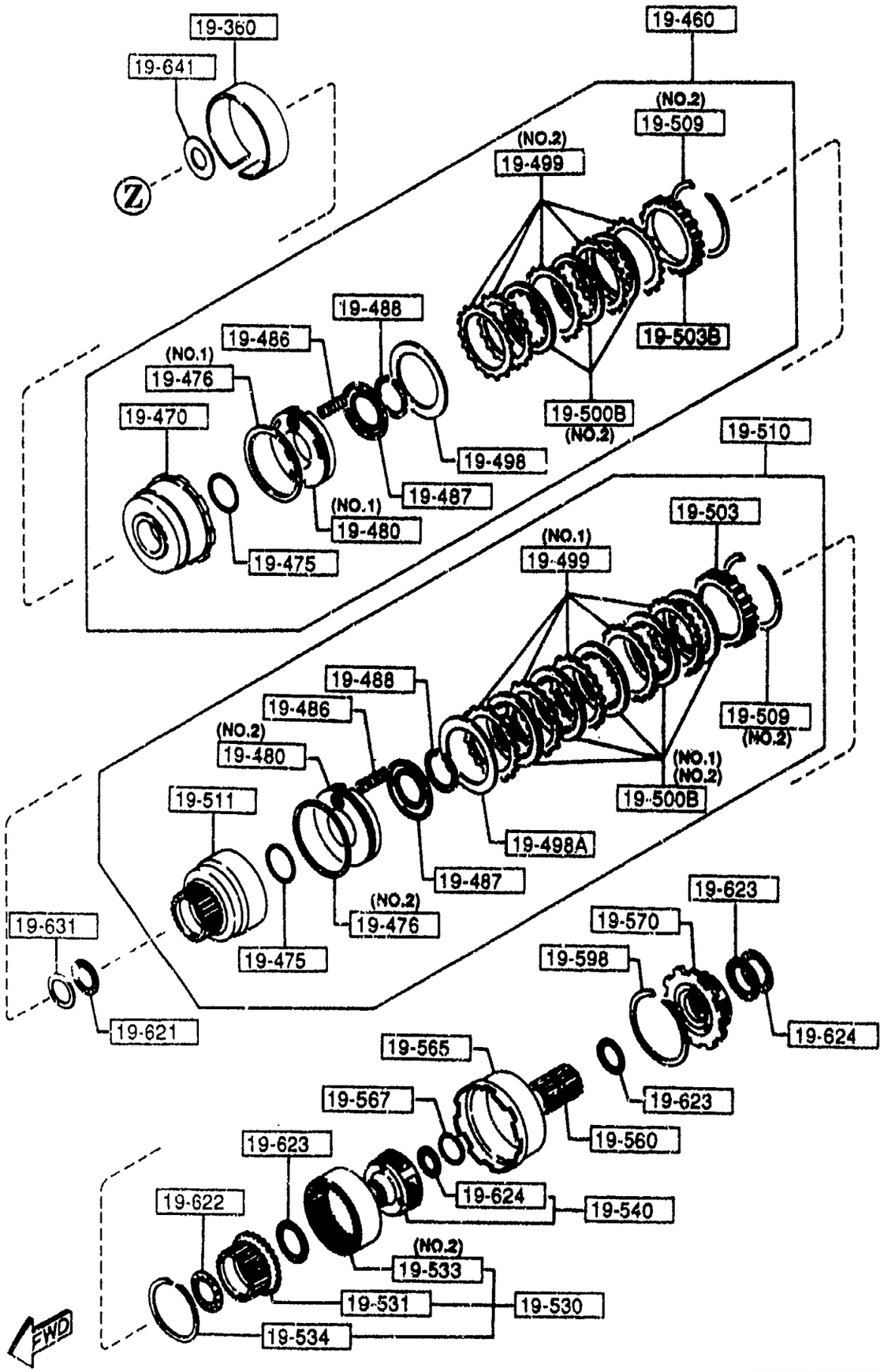

PART NO.	QTY	MODEL/RESTRICTION	MODEL/RESTRICTION	MODEL/RESTRICTION	FROM-TO
21-531		HUB,O/DRIVE CLUTCH			
BV01-21-536	1				
21-534		RACE,OUTER-ONE WAY CLUTCH			
BV01-21-534	1				
21-540		CARRIER,OVER DRIVE			
BV01-21-540B	1				
21-560		GEAR,OVER DRIVE			
BV01-21-560	1				
21-565		CONNECTING,SHELL			
BU03-21-565	1				
21-567		RING,SNAP			
BU03-21-567	1				
21-570		SUPPORT,CENTER			
BV01-21-570A	1				
21-590		CLUTCH,ONE WAY			
BV01-21-533	1				
21-631		RACE,BRG.HUB CLUTCH			
BU01-21-631	1	L=1.2MM			
BU01-21-632	1	L=1.4MM			
BU01-21-633	1	L=1.6MM			
BU01-21-634	1	L=1.8MM			
BU01-21-635	1	L=2.0MM			
BU01-21-636	1	L=2.2MM			
21-679		SHAFT,INTERMEDIATE			
BU01-21-679	1				
21-821		PLATE,RETAINING			

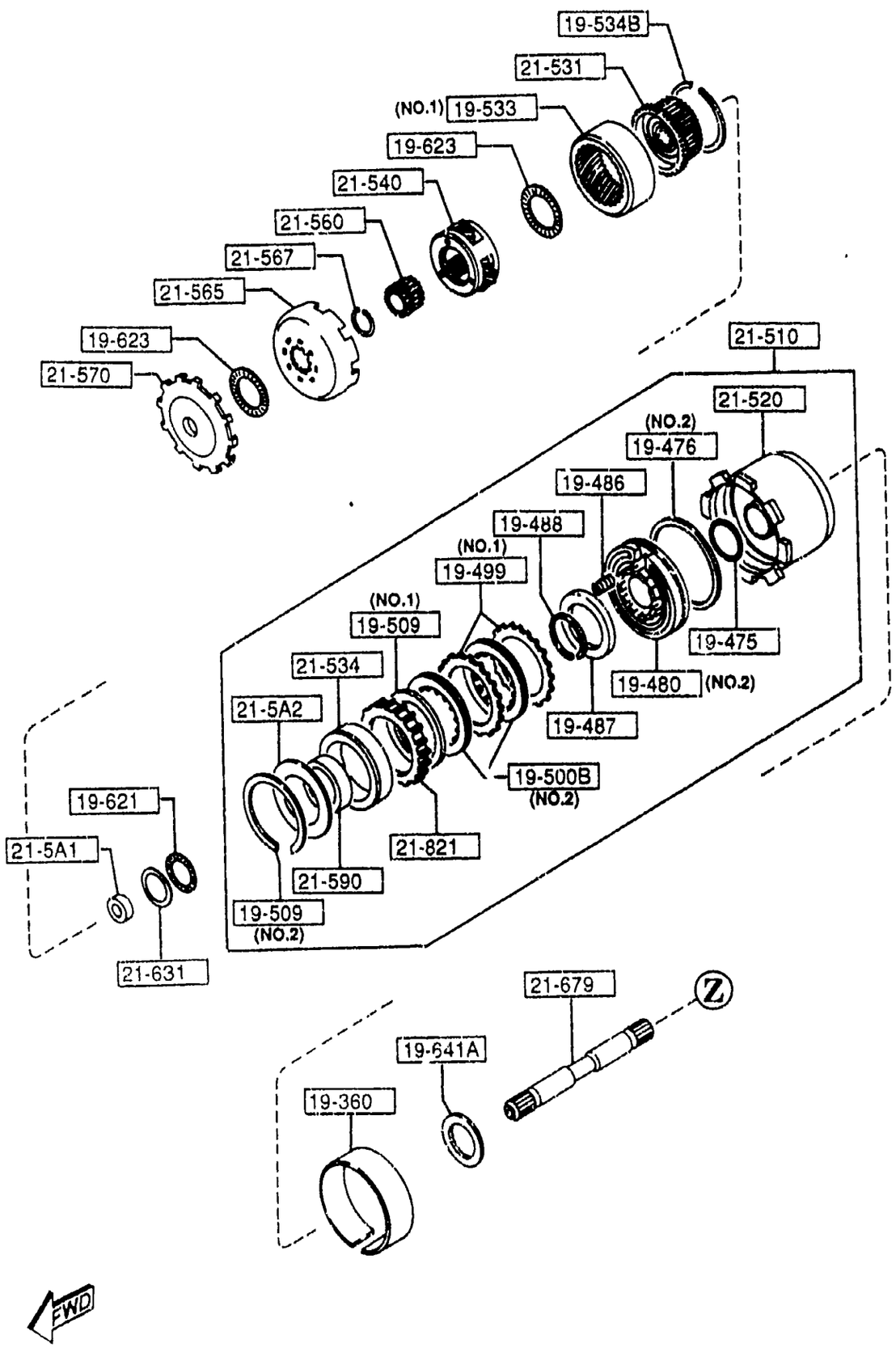

1930 -7 * AUTOMATIC TRANSMISSION CLUTCHES & PLANETARY GEARS

PART NO.	QTY	MODEL/RESTRICTION	MODEL/RESTRICTION	MODEL/RESTRICTION	FROM-TO
CONT'D					
BV01-21-821A	1				

1940 AUTOMATIC TRANSMISSION GOVERNOR, LOW & REVERSE PISTON

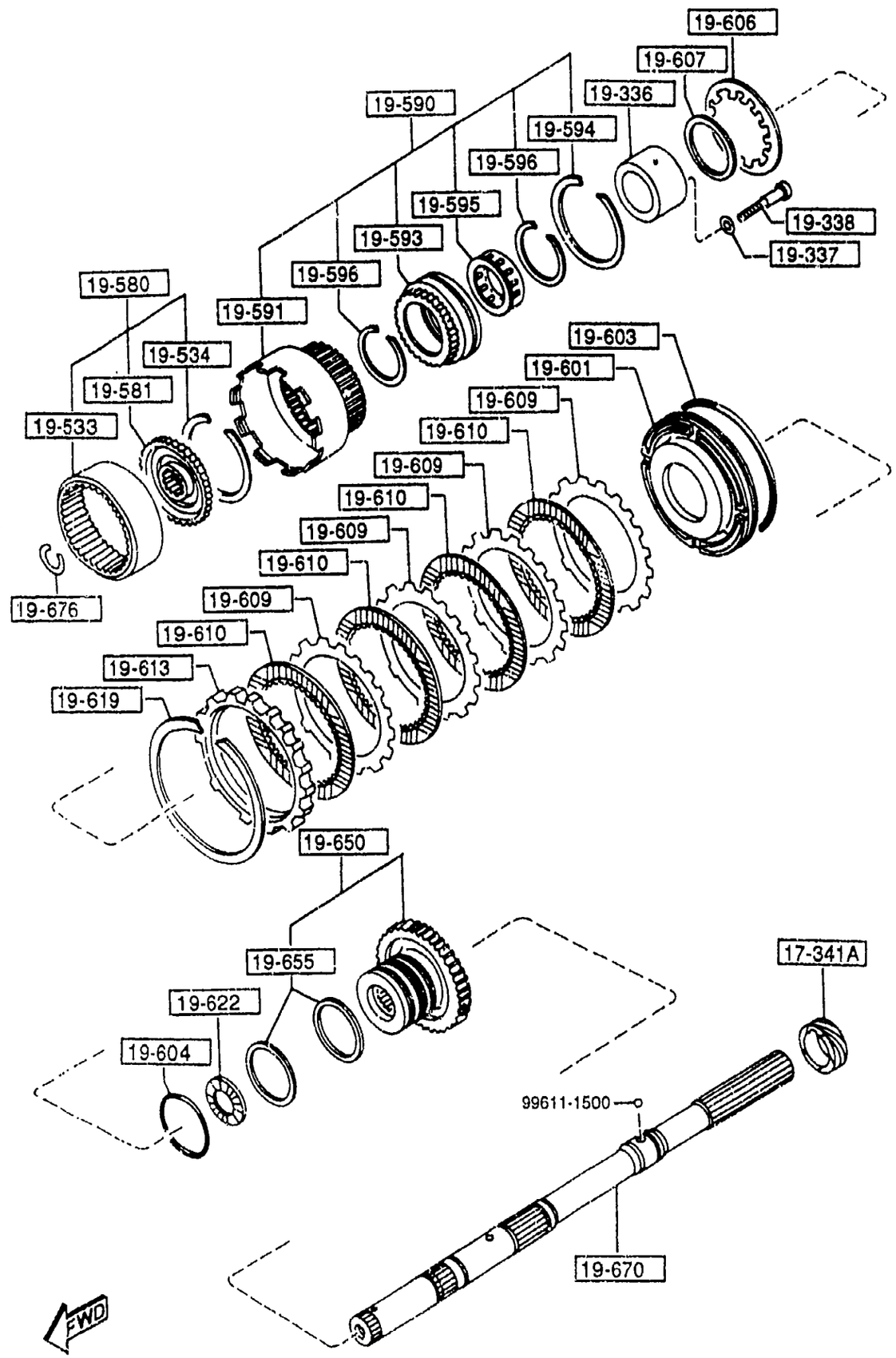

PART NO.	QTY	MODEL/RESTRICTION	MODEL/RESTRICTION	MODEL/RESTRICTION	FROM-TO
17-341A 1281-17-341	1	GEAR,SPEEDO.DRIVE			
19-336 0338-19-336	1	RACE,INNER			
19-337 0338-19-337	8	WASHER,PLAIN			
19-338 0338-19-338	8	BOLT			
19-533 0338-19-533A	2	GEAR,INTERNAL			
19-534 0338-19-534	1	RING,SNAP			
19-580 0338-19-580	1	FLANGE			
19-581 0338-19-581	1	FLANGE,DRIVE			
19-590 0338-19-590	1	DRUM,CONNECTING			
19-591 0338-19-591	1	DRUM,CONNECTING			
19-593 0338-19-593	1	RACE,OUTER			
19-594 0338-19-594	1	RING,SNAP			
19-595 0338-19-595	1	CLUTCH,ONE WAY			
19-596 0338-19-596	2	RING,SNAP			

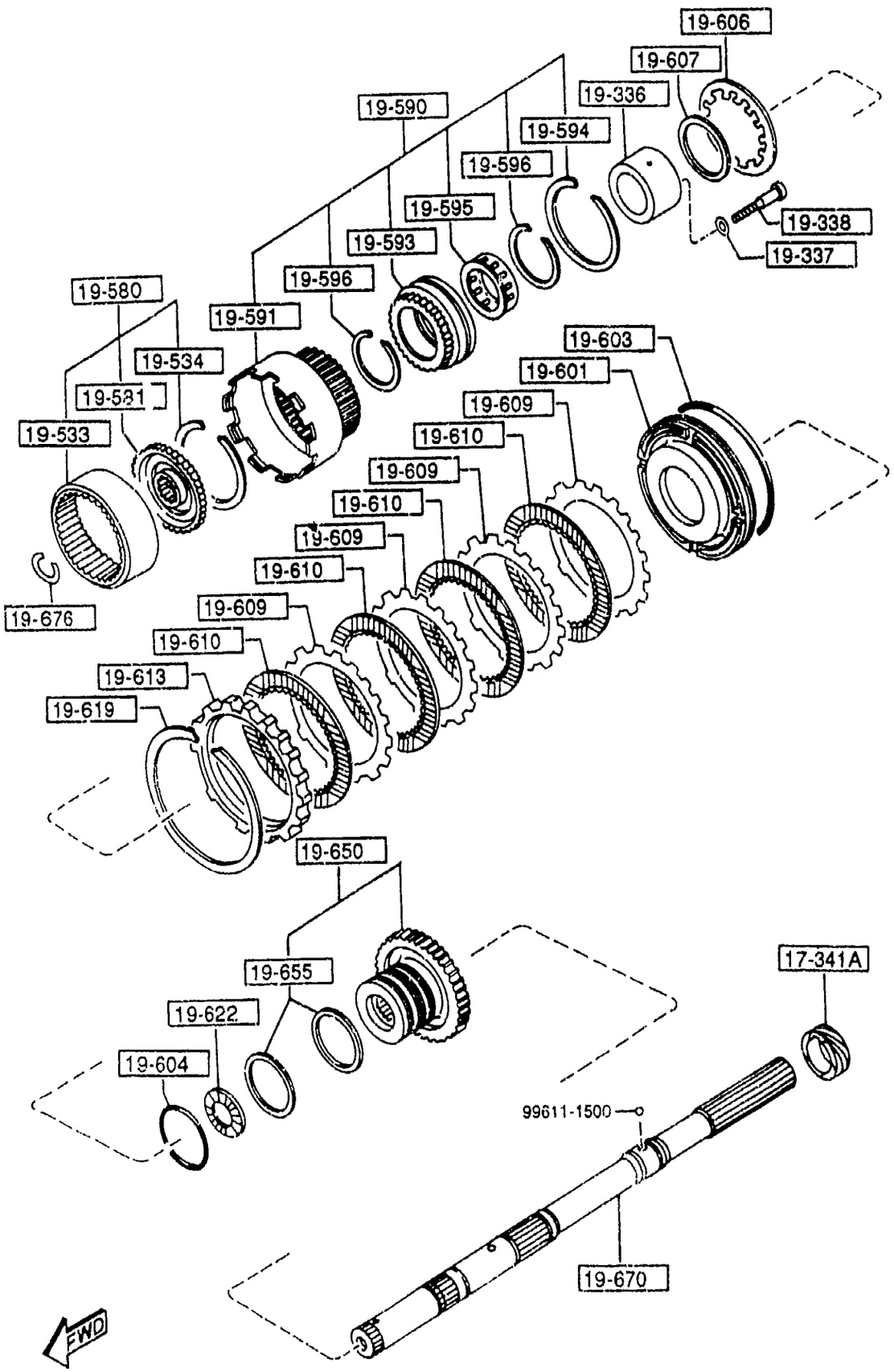

1940 -2 AUTOMATIC TRANSMISSION GOVERNOR, LOW & REVERSE PISTON

PART NO.	QTY	MODEL/RESTRICTION	MODEL/RESTRICTION	MODEL/RESTRICTION	FROM-TO
19-601		PISTON,LOW & REVERSE			
BT08-19-600	1				
19-603		SEAL,PISTON			
0338-19-603	1				
19-604		SEAL,'O'RING			
0338-19-604	1				
19-606		SPRING,PISTON			
0338-19-606	1				
19-607		RING,SNAP			
0338-19-607	1				
19-609		PLATE,DRIVEN			
0338-19-609	4				
19-610		PLATE,DRIVE			
BU17-19-610	4				
19-613		PLATE,RETAINING			
0338-19-613A	1	T=11.8MM			
0338-19-614A	1	T=12MM			
0338-19-615A	1	T=12.2MM			
0338-19-616A	1	T=12.4MM			
0338-19-617A	1	T=12.6MM			
0338-19-618A	1	T=12.8MM			
19-619		RING,SNAP			
0338-19-619	1				
19-622		BEARING,NEEDLE			
BU91-19-622	1	D=34.7MM			
FT01-19-622	1	D=33.8MM			

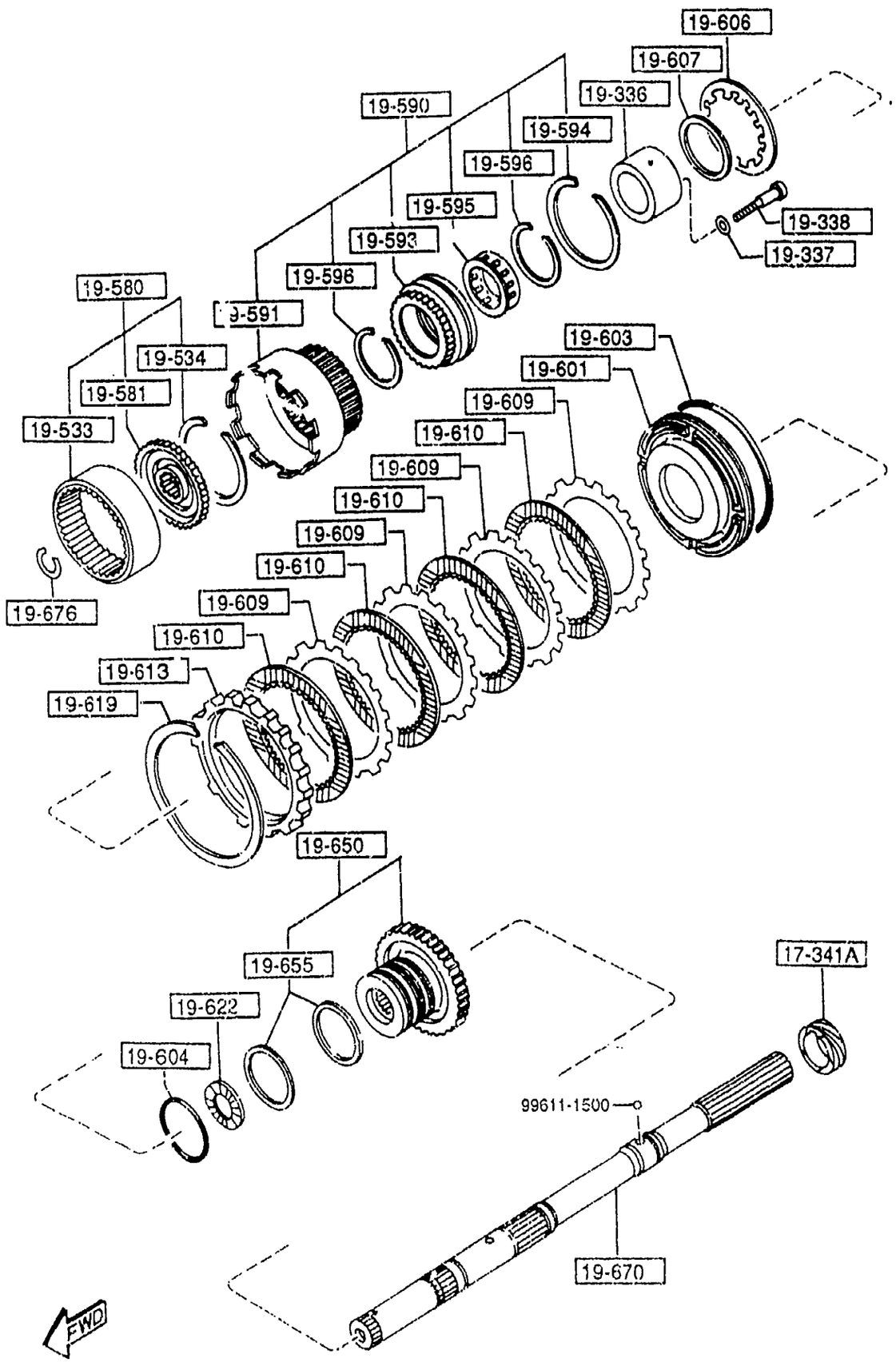

PART NO.	QTY	MODEL/RESTRICTION	MODEL RESTRICTION	MODEL/RESTRICTION	FROM-TO
19-650		DISTRIBUTOR,OIL			
BV01-19-650	1				
19-655		RING,SEAL			
BV01-19-655	2				
19-670		SHAFT			
BU55-19-670	1				
19-676		RING			
0338-19-676	1				

1950 AUTOMATIC TRANSMISSION MANUAL LINKAGE SYSTEM

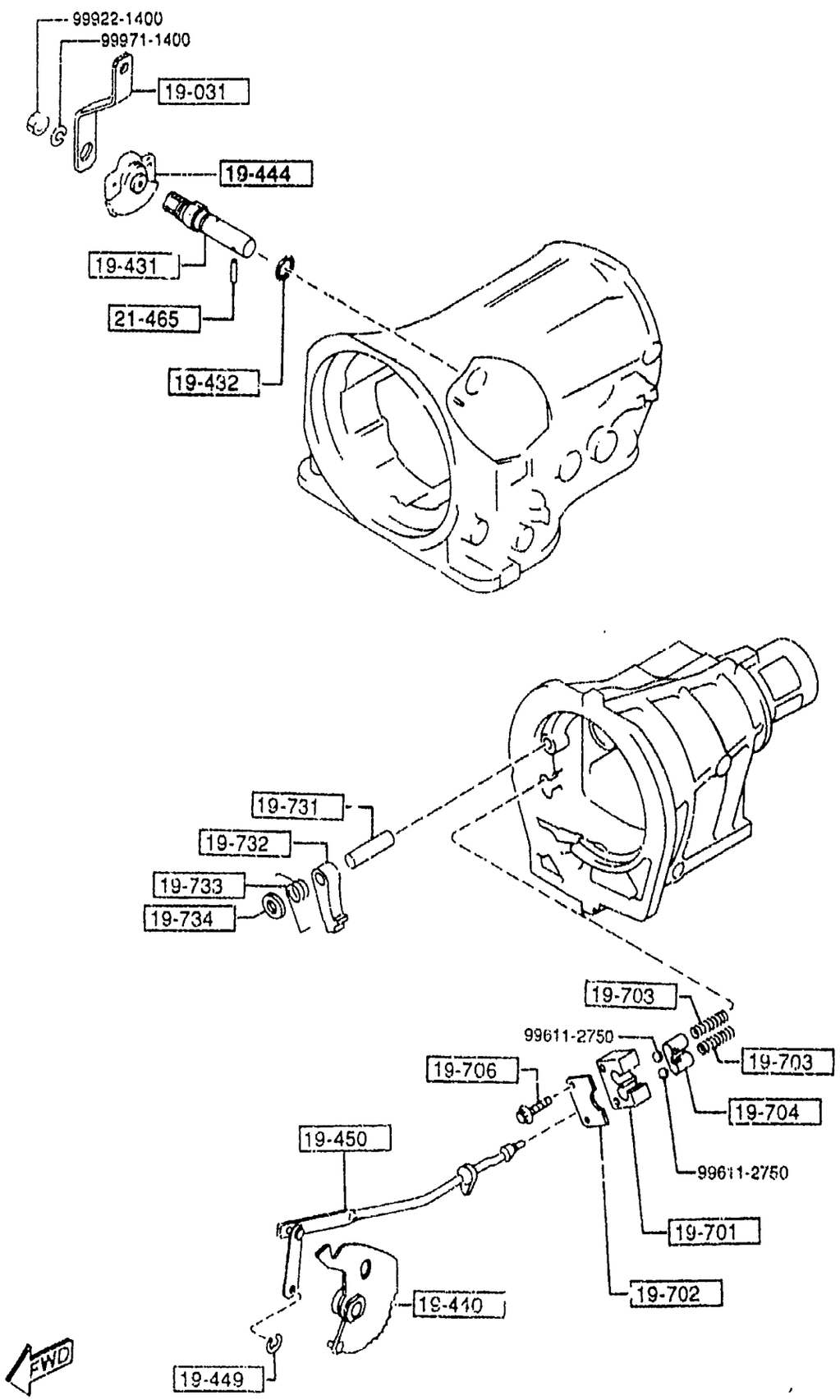

PART NO.	QTY	MODEL/RESTRICTION	MODEL/RESTRICTION	MODEL/RESTRICTION	FROM-TO
19-031		LEVER,SELECT			
BU55-19-031	1				
19-431		SHAFT,MANUAL			
BU67-19-431	1				
19-432		RING,'O'			
0338-19-432	1				
19-440		PLATE,MANUAL			
BU56-19-440	1				
19-444		SWITCH,INHIBITOR			
N451-19-444	1				
19-449		RING,SNAP			
0338-19-449	1				
19-450		ROD,PARKING			
BU17-19-450	1				
19-701		SUPPORTER,ACTUATOR			
BU17-19-701	1				
19-702		PLATE,RETAINING			
0338-19-702A	1				
19-703		SPRING,BALL PARK			
BU17-19-703	2				
19-704		RETAINER			
BU17-19-704	1				
19-706		BOLT			
0338-19-706	1				
19-731		SHAFT,PARKING PAWL			
0338-19-731	1				
19-732		PAWL,PARKING			
BU17-19-732	1				

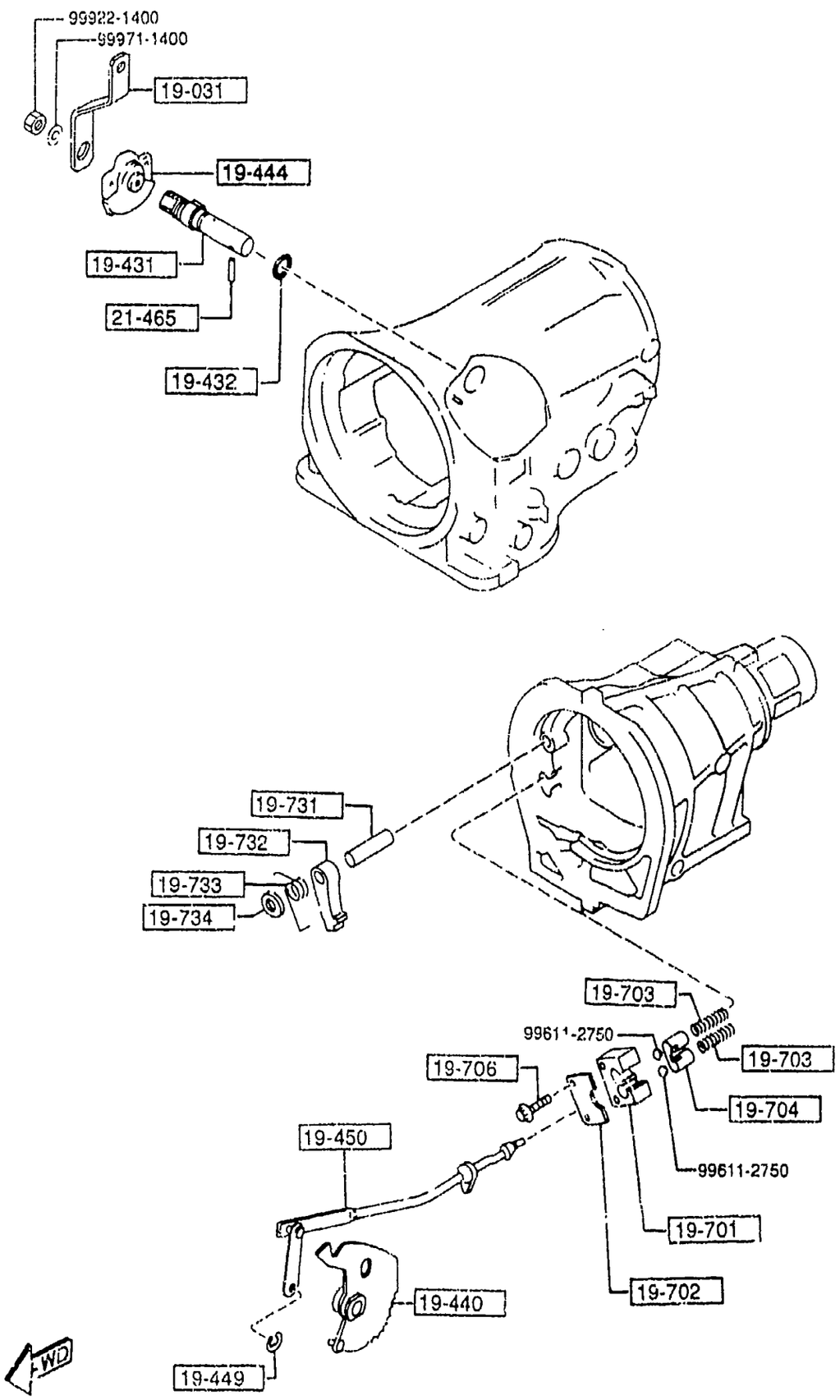

PART NO.	QTY	MODEL/RESTRICTION	MODEL/RESTRICTION	MODEL/RESTRICTION	FROM-TO
+----------+ | 19-733 | +----------+ 0338-19-733C	1	SPRING,PAWL RETURN			
+----------+ | 19-734 | +----------+ 0338-19-734A	1	SPACER,DOWEL			
+----------+ | 21-465 | +----------+ BU67-21-465	1	PIN,SPRING-PARKING ROD			

22-900

1-SEAL, OIL	(1)	17-SEAL, LATHE CUT	(1)
2-GASKET, OIL PUMP	(1)	18-SEAL, PISTON	(1)
3-SEAL, OIL	(1)	19-SEAL, " O" RING	(1)
4-RING, SEAL	(4)	20-RING, SEAL	(2)
5-RING, SEAL	(2)	21-GASKET, EXTENTION	(1)
6-SEAL, CUT RING	(1)	22-SEAL, " O" RING	(1)
7-GASKET	(1)	23-GASKET, OIL PAN	(1)
8-SEAL, PISTON	(1)	24-GASKET, DRUM SUPPORT	(1)
9-SEAL, PISTON	(1)	25-RING, " O"	(1)
10-SEAL, PISTON	(1)	26-RING, " O"	(1)
11-SEAL, PISTON	(1)	27-RING, " O"	(1)
12-SEAL, LATHE CUT	(1)	28-GASKET, O/DRIVE CASE	(1)
13-RING, " O"	(1)	29-RING, " O"	(2)
14-RING, " O"	(1)	30-RING, " O"	(1)
15-RING, " O"	(1)	31-RING, " O"	(4)
16-SEAL, " O" RING	(3)		

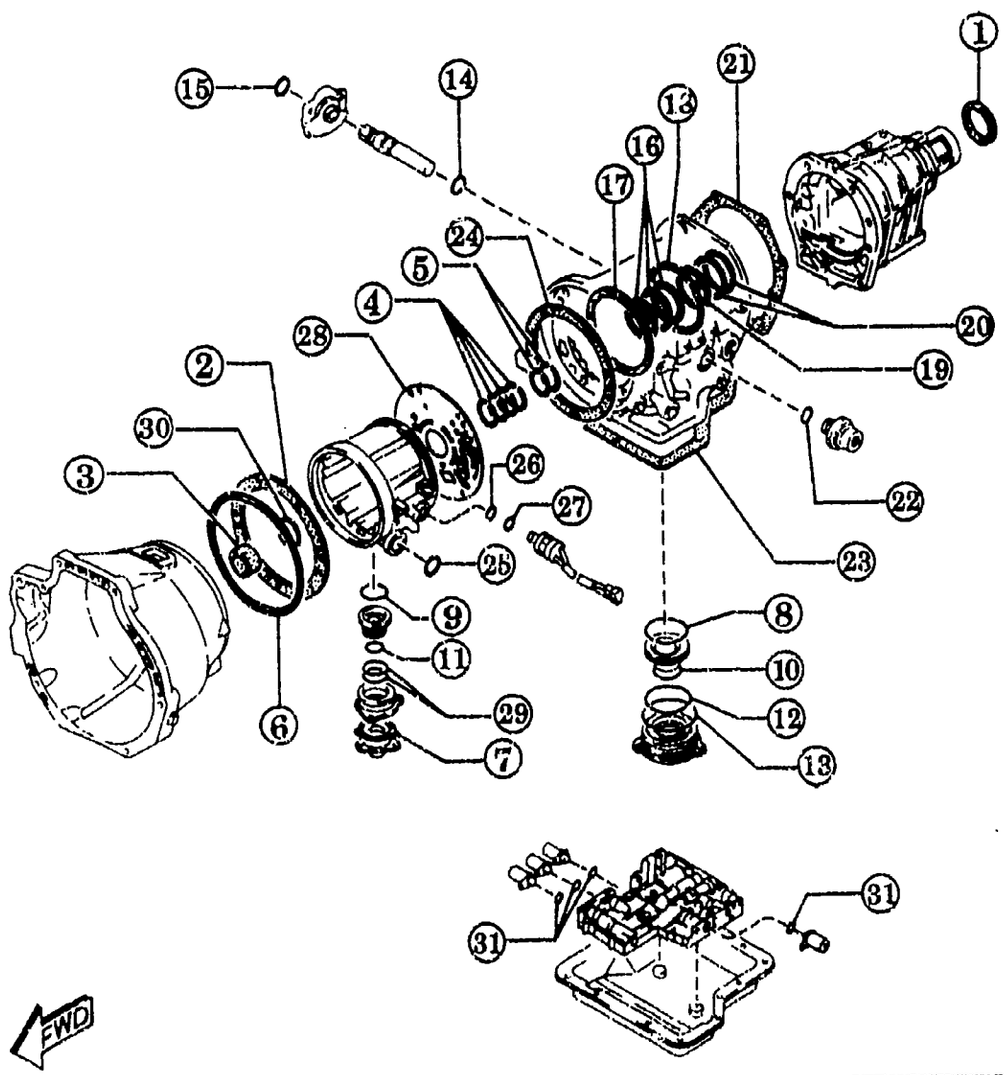

PART NO.	QTY	MODEL/RESTRICTION	MODEL/RESTRICTION	MODEL/RESTRICTION	FROM-TO
22-900		GASKET & SEAL KIT			
N451-22-900	1				