Parts Catalog

Mazda MX-5 MIATA U.S.A. ('97)

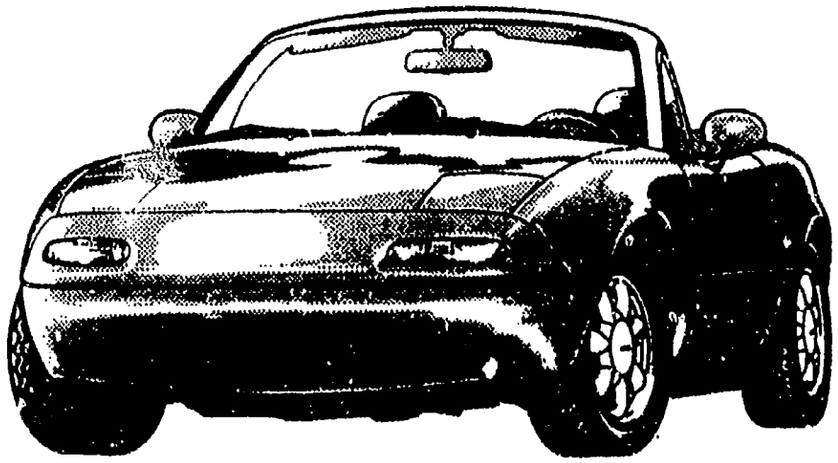

NA35 • -700001~800000

Jul.'98 (FINAL)

Catalog No. AU-NA06-03

mazda

© 1998 Mazda Motor Corporation

LAYOUT OF CONTENTS / DISPOSITION TYPOGRAPHIQUE DE CONTENU / DISPOSICION DEL CONTENIDO / ANORDNUNG DES INHALTS

- The following is a typical example of the layout of contents on Mazda microfiche parts catalog.
- Voici un exemple typique de la disposition typographique de contenu dans les microfiches de catalogue des pièces de Mazda.
- El siguiente es un ejemplo típico de la disposición del contenido en una microficha del catálogo de repuestos de Mazda.
- Folgendes ist ein typisches Beispiel der Inhaltsanordnung des Mazda-Mikrofiche-Teilekatalogs.

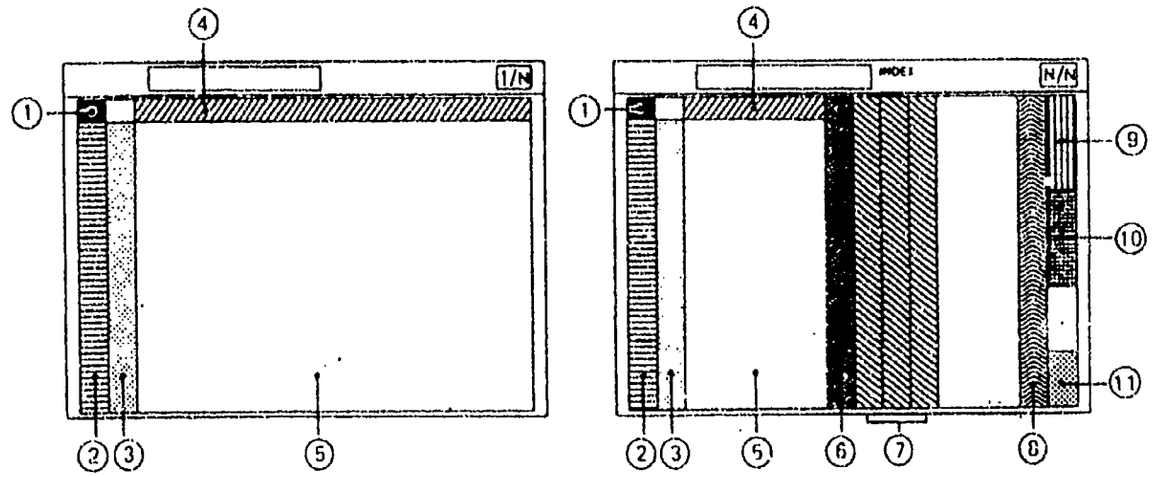

Remark : The items listed under ④ have been deleted from each fiche since Doc. '93

① • Layout of contents
• Disposition Typographique de Contenu
• Disposición del contenido
• Anordnung des Inhalts

② • Pictorial Index
• Index par Schémas
• Indice Gráfico
• Illustrierter Index

③ • Master Section No. Index
• Index des Numéros des Sections Totale
• Indice del Número de la Sección Maéstra
• Hauptabschnitssnummer-Index

~~④ • Section No. Index for the Column~~
~~• Index des Numéros des Sections pour les Colonnes~~
~~• N° de la Sección para el Indice~~
~~• Abschnitssnummer-Index für die Spalte~~

⑤ • Illustration & Text
• Illustrations et Textes
• Ilustración y Texto
• Abbildung und Text

⑥ • Part No. Index
• Index des Numéros des Pièces
• Indice del N° de Pieza
• Teile Nr.-Index

⑦ • Alphabetical Index
• Index Alphabétic
• Indice Alfabético
• Alphabetischer Index

⑧ • Model Identification
• Identification des Modèles
• Identificación del Modelo
• Modell-Kennzeichnung

⑨ • Vehicle Identification System
• Système d'Identification de Véhicule
• Sistema de Identification de Vehículo
• Fahrzeug-Identifikations-system

PICTORIAL INDEX

GASOLINE ENGINE 4 - CYLINDER (1/2)

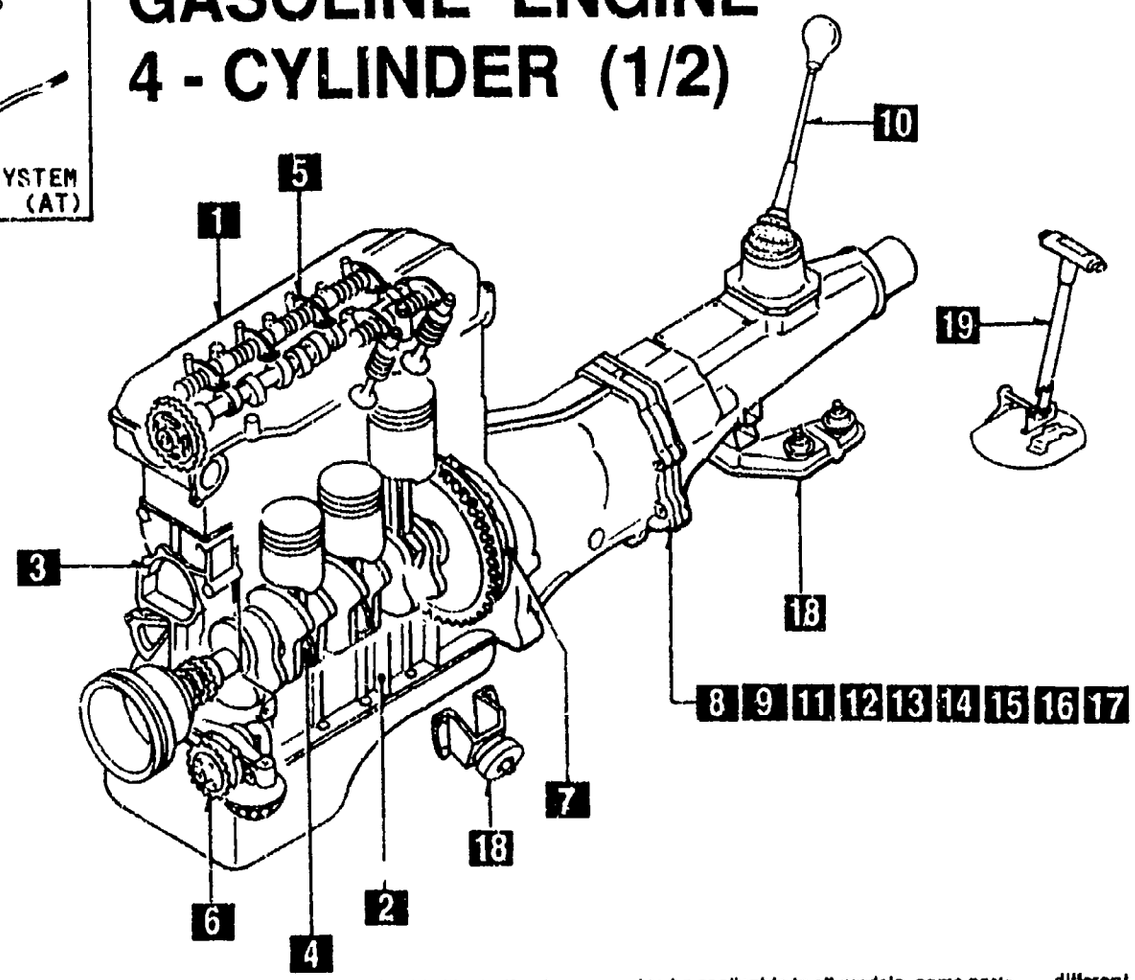

As this illustration is prepared to be applicable to all models, some parts ... different in specifications from parts listed in this parts Catalog.

1000

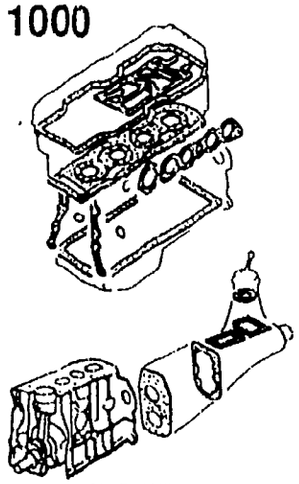

ENGINE & GASKET SETS

1 1010

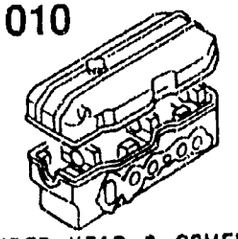

CYLINDER HEAD & COVER

2 1030

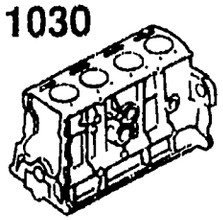

CYLINDER BLOCK

3 1040

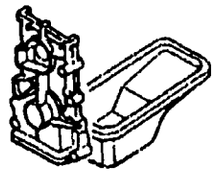

OIL PAN & TIMING COVER

4 1100

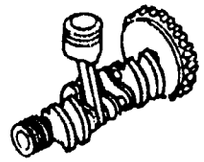

PISTON, CRANKSHAFT & FLYWHEEL

5 1200

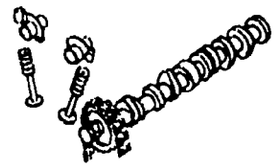

VALVE SYSTEM

6 1400

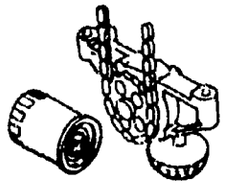

OIL PUMP & FILTER

7 1600

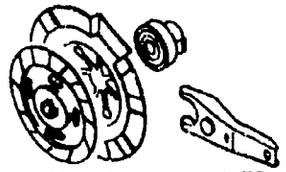

CLUTCH DISC & COVER (MANUAL)

8 1700

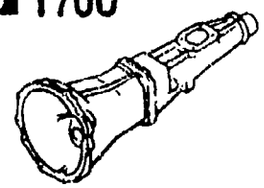

TRANSMISSION CASE (MANUAL)

9 1710

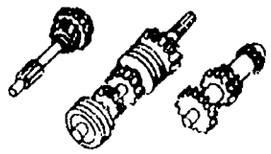

TRANSMISSION GEARS (MANUAL)

10 1720

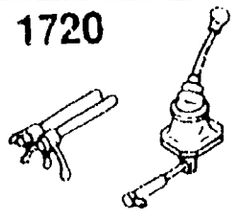

CHANGE CONTROL SYSTEM (MANUAL)

11 1910

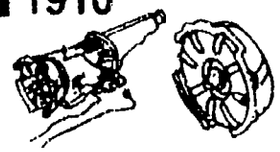

TORQUE CONVERTER, OIL PUMP & PIPINGS (AUTOMATIC)

12 1920

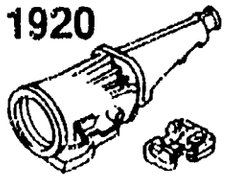

TRANSMISSION CASE & MAIN CONTROL SYSTEM (AUTOMATIC)

13 1925

CONTROL VALVE (AUTOMATIC)

14 1930

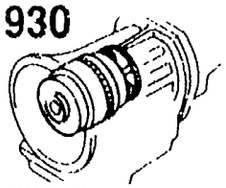

CLUTCHES & PLANETARY GEARS (AUTOMATIC)

15 1940

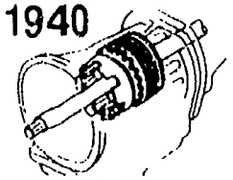

GOVERNOR, LOW & REVERSE PISTON (AUTOMATIC)

16 1950

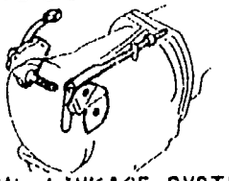

MANUAL LINKAGE SYSTEM (AUTOMATIC)

17 1960

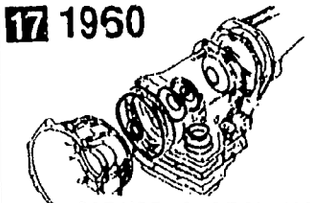

GASKET & SEAL KIT (AUTOMATIC)

18 3900

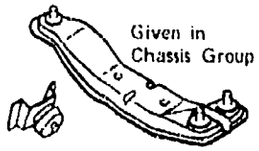

Given in Chassis Group

ENGINE & T/MISSION MOUNTINGS

19 4600

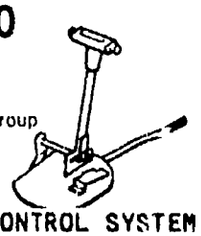

Given in Chassis Group

CHANGE CONTROL SYSTEM (AT)

PICTORIAL INDEX

1 1300

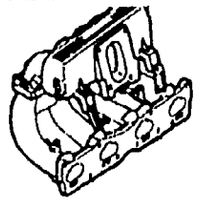

INLET MANIFOLD

2 1310

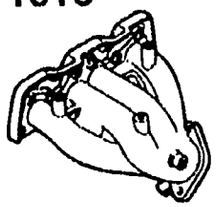

EXHAUST MANIFOLD

3 1320

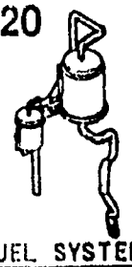

FUEL SYSTEM

4 1325

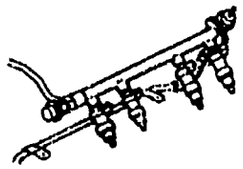

FUEL DISTRIBUTOR

5 1330

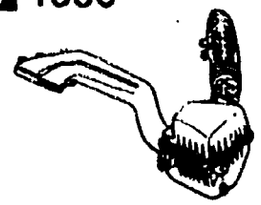

AIR CLEANER

6 1364

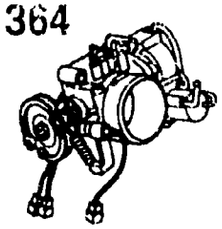

THROTTLE BODY

GASOLINE ENGINE
4 - CYLINDER (2/2)

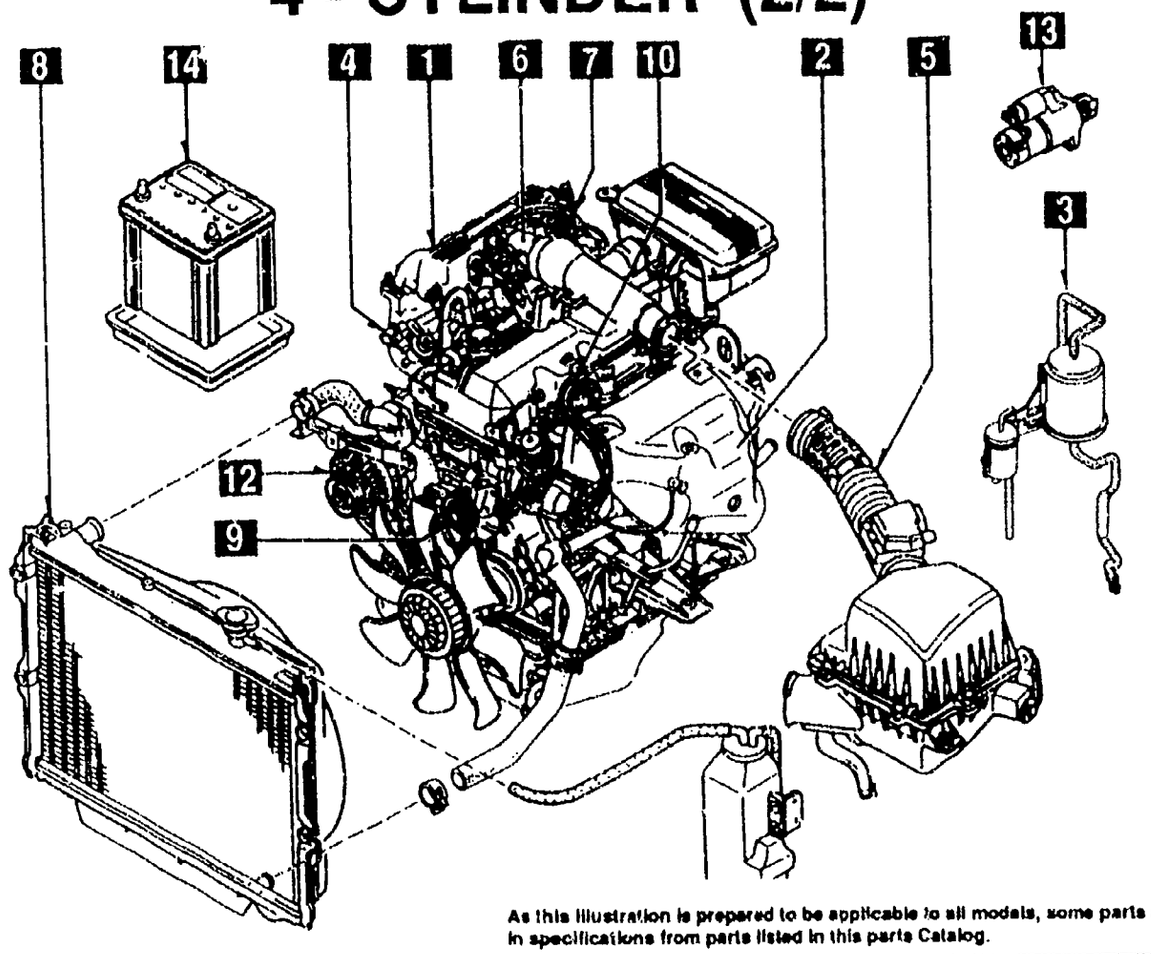

As this illustration is prepared to be applicable to all models, some parts are different in specifications from parts listed in this parts Catalog.

7 1370

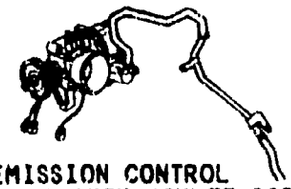

EMISSION CONTROL SYSTEM (INLET SIDE)

8 1500

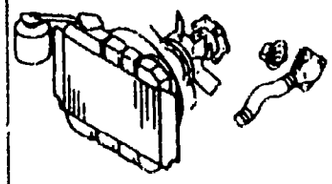

COOLING SYSTEM

9 1580

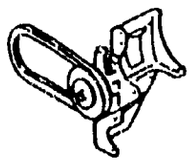

BRACKET, PULLEY & BELT

10 1800

ENGINE ELECTRICAL SYSTEM

11

14 1850

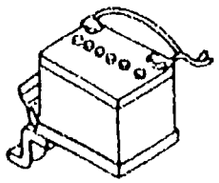

BATTERY

13 1840

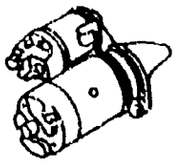

STARTER

12 1830

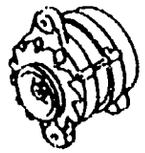

ALTERNATOR

PICTORIAL INDEX

CHASSIS (1/2)

1 2505
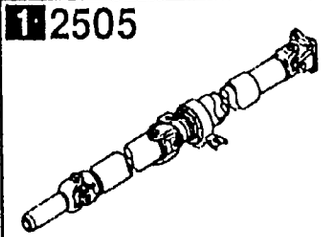
REAR PROPELLER SHAFT

2 2550
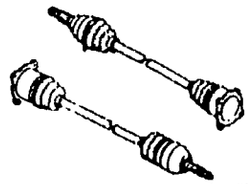
REAR DRIVE SHAFT

3 2600

REAR AXLE

4 2610

REAR BRAKE MECHANISMS

5 2710

REAR DIFFERENTIALS

6 2800

REAR SUSPENSION MECHANISMS

7

8 2810

REAR STABILIZER

9 2830
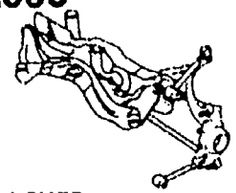
REAR LOWER ARMS & SUB FRAME

10 3200

STEERING WHEEL

11 3210

STEERING COLUMN & SHAFTS

12 3220
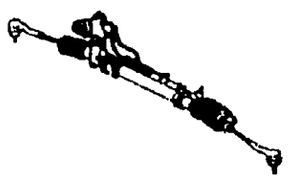
STEERING GEAR

13 3240
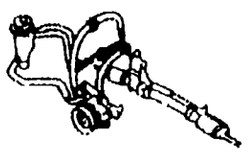
POWER STEERING SYSTEM (FRONT)

14 3300

FRONT AXLE

15 3310

FRONT BRAKE MECHANISMS

16 3400
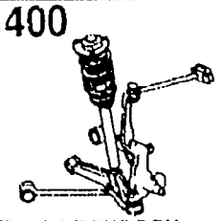
FRONT SUSPENSION MECHANISMS

17

18 3410
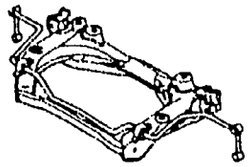
CROSSMEMBER & STABILIZER

19 3900
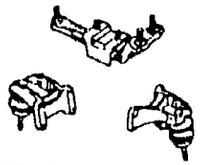
ENGINE & T/MISSION MOUNTINGS

20 4000
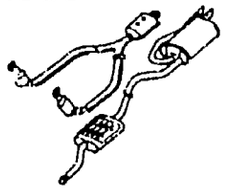
EXHAUST SYSTEM

21 4600
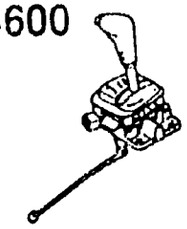
CHANGE CONTROL SYSTEM

22 1720
Given in Engine Group
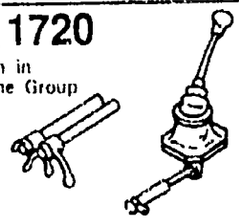
CHANGE CONTROL SYSTEM (MANUAL TRANSMISSION)

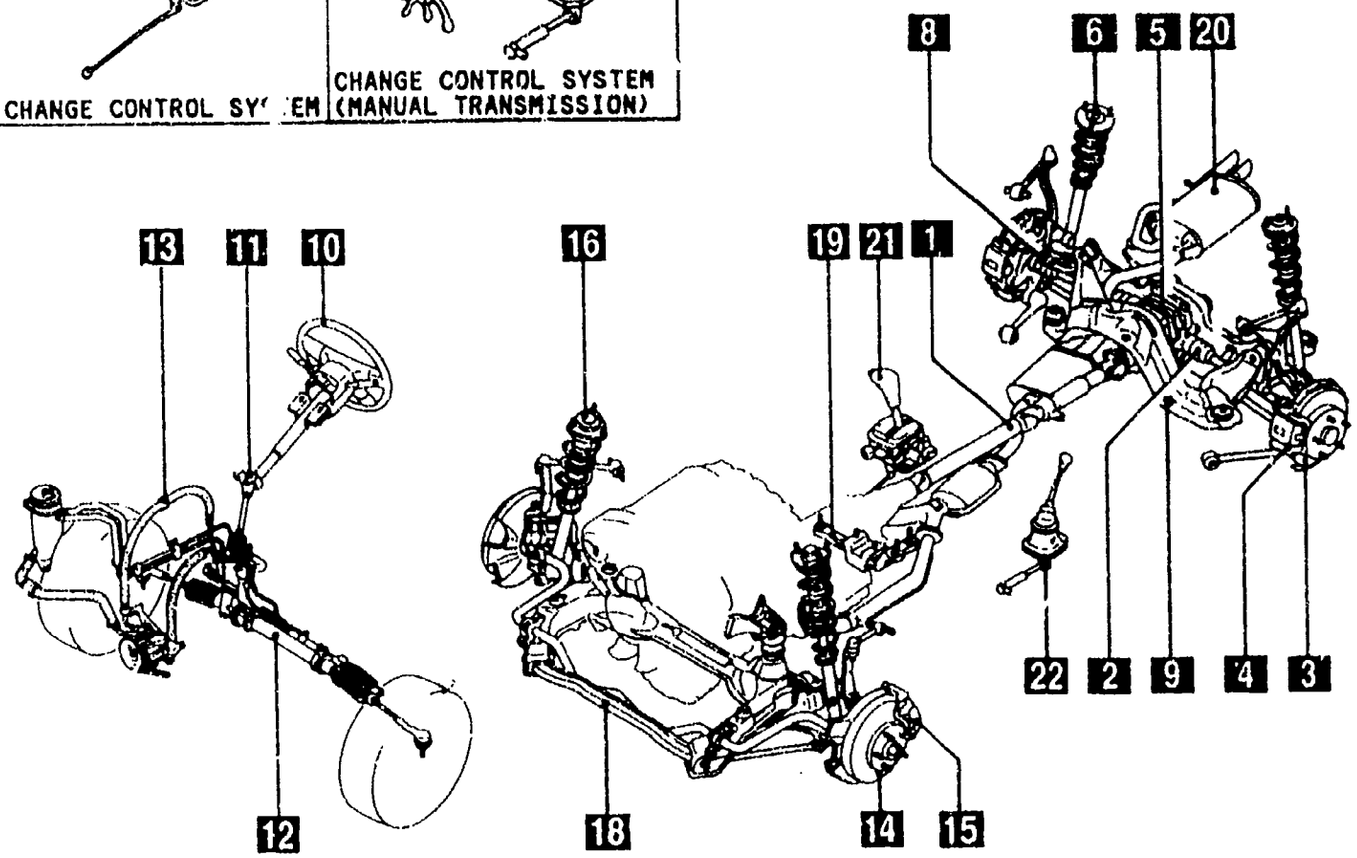

As this illustration is prepared to be applicable to all models, some parts are different in specifications from parts listed in this parts Catalog.

PICTORIAL INDEX

1 3700

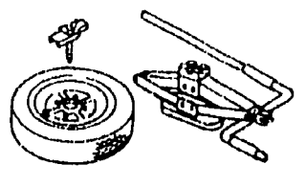

TIRES & JACK

2 4140

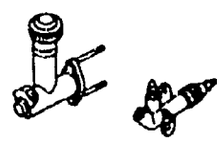

CLUTCH RELEASE & MASTER CYLINDERS

3 4145

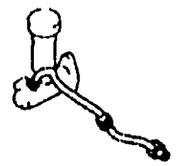

CLUTCH PIPINGS

4 4160

ACCELERATOR CONTROL SYSTEM

5 4200

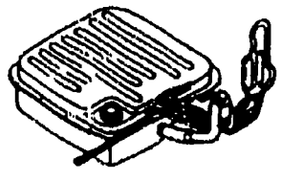

FUEL TANK

6 4210

FUEL LID OPENER

CHASSIS (2/2)

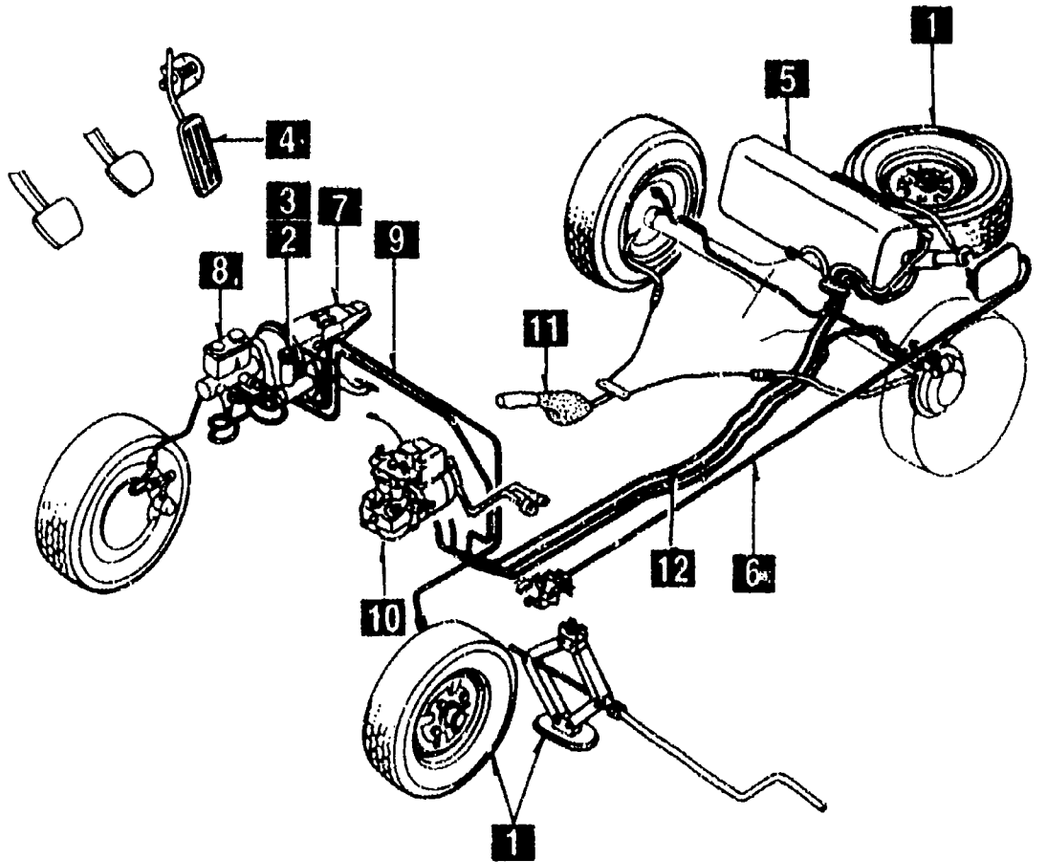

As this illustration is prepared to be applicable to all models, some parts are different in specifications from parts listed in this parts Catalog.

7 4300

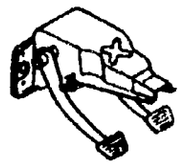

CLUTCH & BRAKE PEDALS

8 4340

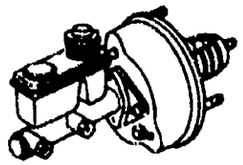

BRAKE MASTER CYLINDER & POWER BRAKE

9 4360

BRAKE PIPINGS

10 4370

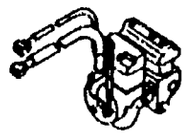

ANTILOCK BRAKE SYSTEM

12 4500

FUEL PIPINGS

11 4400

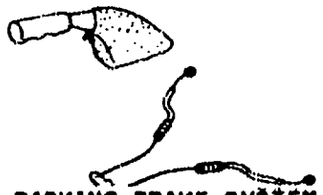

PARKING BRAKE SYSTEM

PICTORIAL INDEX

1 0900

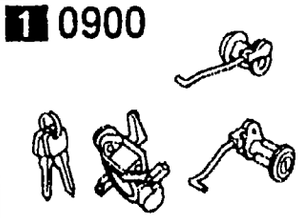

KEY SETS

2 5100

HEAD LAMPS

3 5103

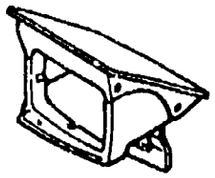

HEAD LAMP RETRACTORS

4 5105

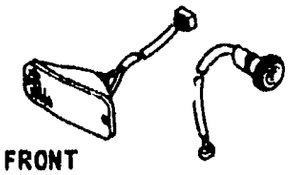

FRONT COMBINATION LAMPS

5 5110

REAR COMBINATION LAMPS

6 5120

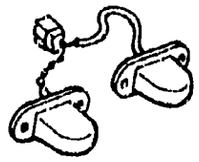

LICENSE LAMPS

20 6640

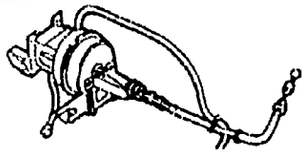

AUTO CRUISE CONTROL SYSTEM

19

18 6740

WIPER MOTOR COMPONENTS (FRONT)

17 6730

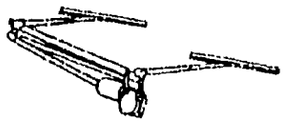

WINDSHIELD WIPERS

BODY (1/4)

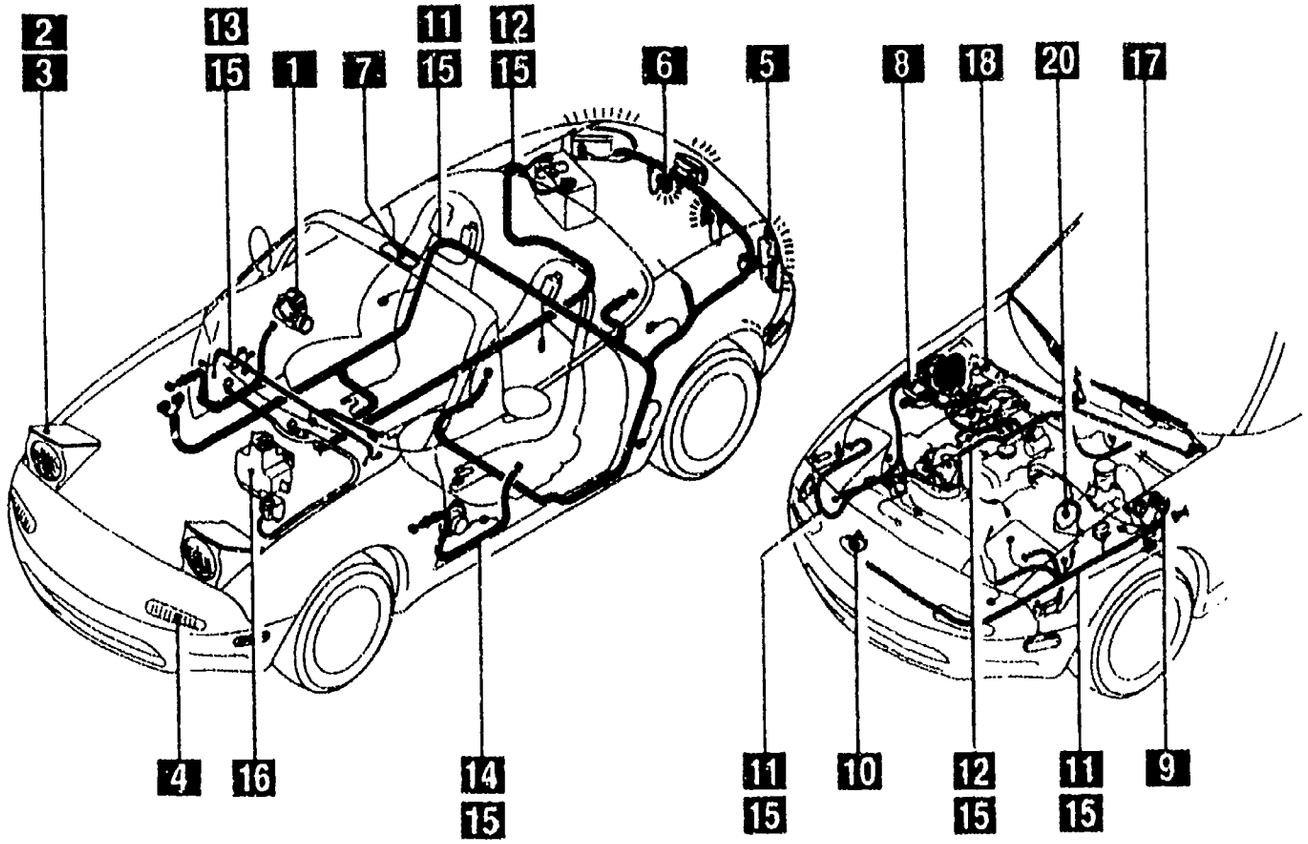

As this illustration is prepared to be applicable to all models, some parts are different in specifications from parts listed in this parts Catalog.

7 5125

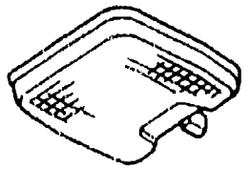

INTERIOR LAMPS

8 6600

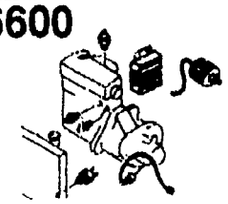

SWITCHES & RELAYS (ENGINE)

9 6630

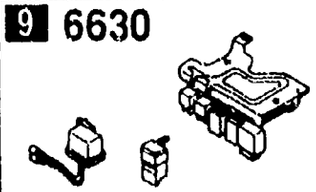

RELAYS & UNIT (BODY)

10 6635

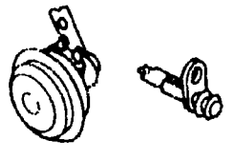

DOOR SWITCH & HORNS

16 6720

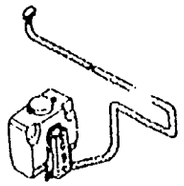

WINDSHIELD WASHER

15 6704

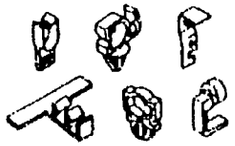

WIRING HARNESS CLAMPS

14 6703

WIRING HARNESSES (DOOR, FLOOR/CEILING)

13 6702

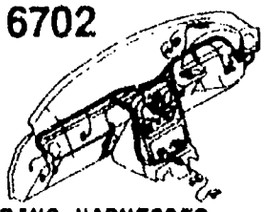

WIRING HARNESSES (DASHBOARD)

12 6701

WIRING HARNESSES (ENGINE & T/MISSION)

11 6700

WIRING HARNESSES (FRONT & REAR)

PICTORIAL INDEX

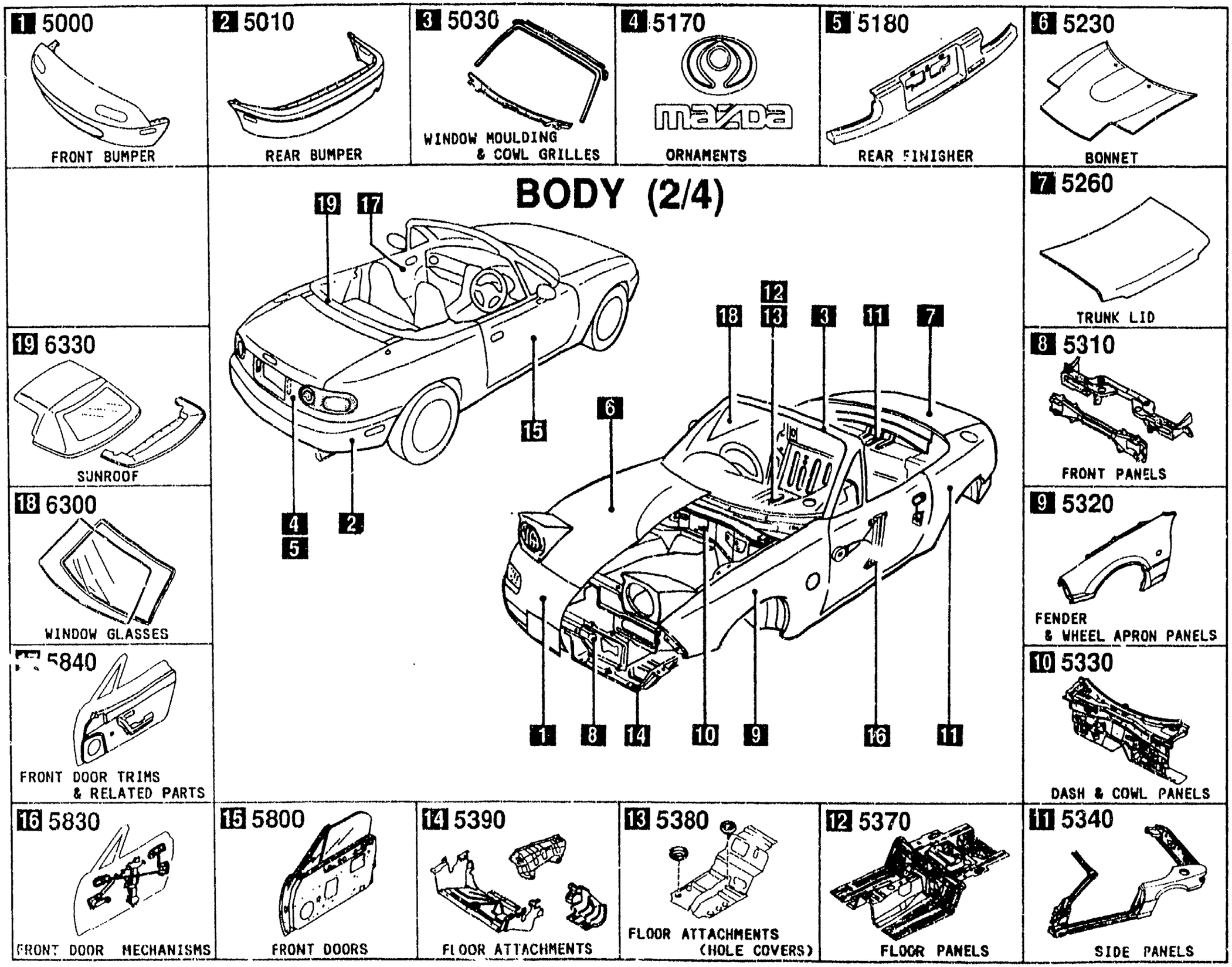

PICTORIAL INDEX

1 5500

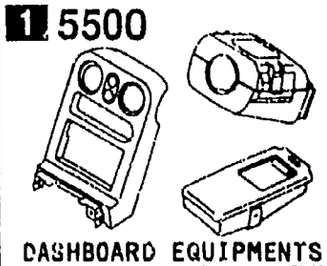

DASHBOARD EQUIPMENTS

2 5520

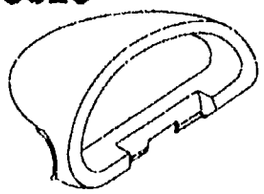

METER HOOD

3 5530

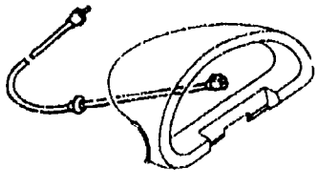

SPEEDOMETER CABLE

4 5540

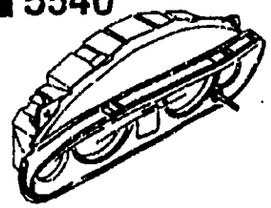

METER COMPONENTS

5 5560

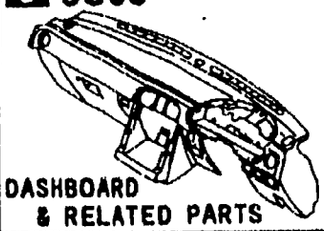

DASHBOARD & RELATED PARTS

6 5570

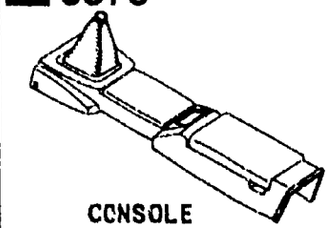

CONSOLE

BODY (3/4)

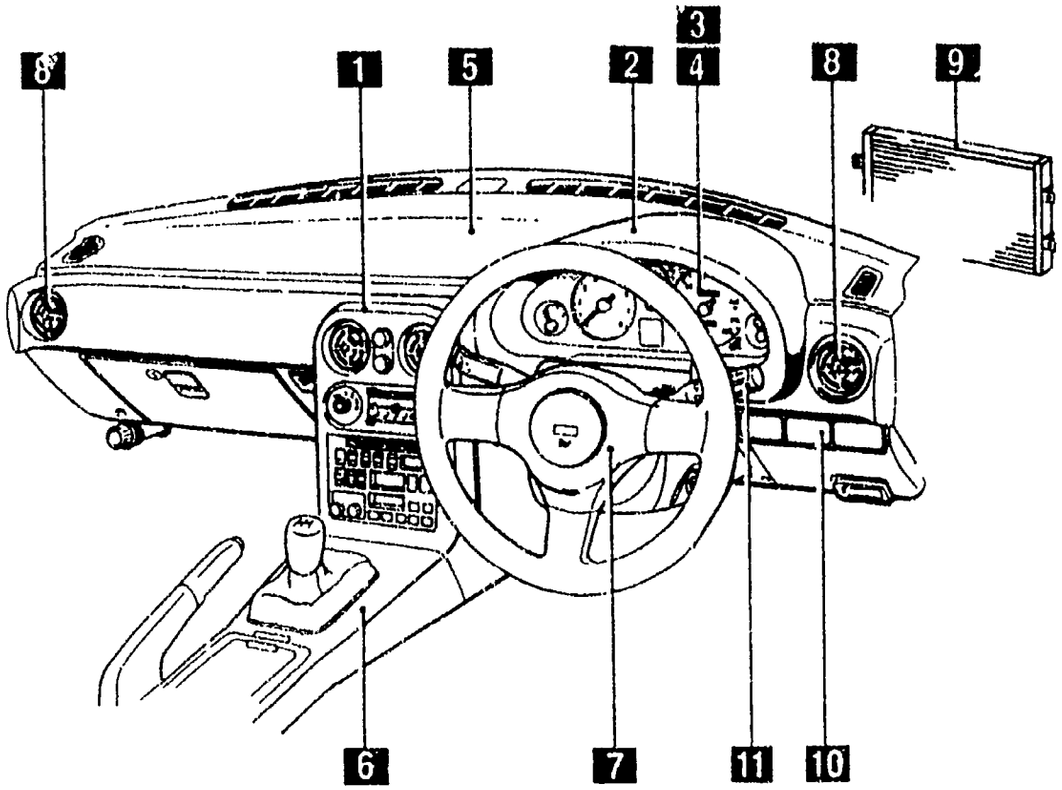

As this illustration is prepared to be applicable to all models, some parts are different in specifications from parts listed in this parts Catalog.

7 5795

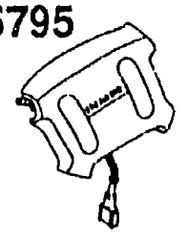

AIR BAG

8

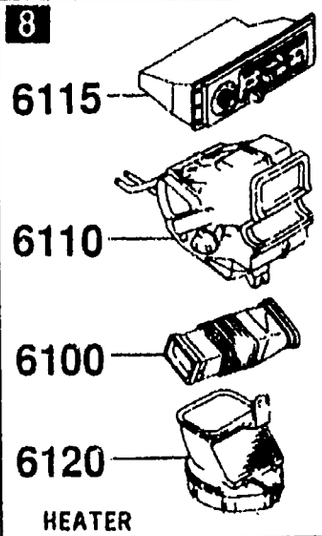

HEATER

9

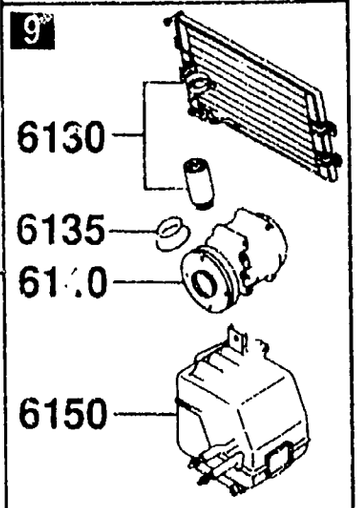

AIR CONDITIONER

11 6611

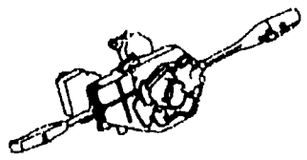

COMBINATION SWITCH

10 6610

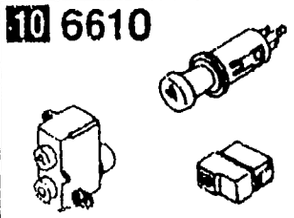

DASHBOARD SWITCHES

PICTORIAL INDEX

1 5580

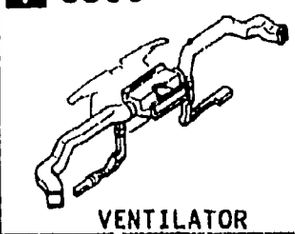

VENTILATOR

2 5700

SEATS

3 5790

SEAT BELTS

4 6680

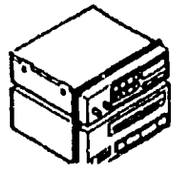

AUDIO SYSTEMS (RADIO & TAPE DECK)

5 6682

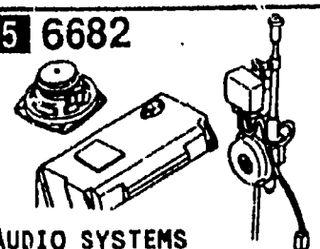

AUDIO SYSTEMS (ANTENNA & SPEAKER)

6 6820

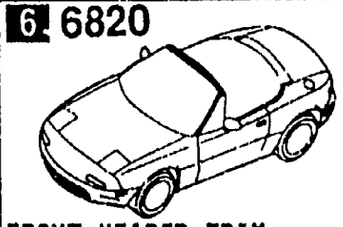

FRONT HEADER TRIM & PILLAR TRIMS

7 6840

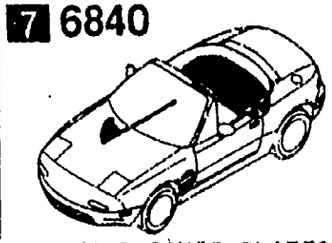

TRIMS & SCUFF PLATES

8 6860

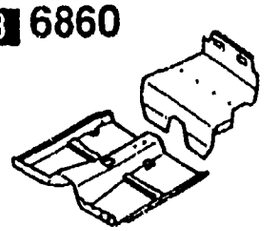

FLOOR MATS & PADS

9 6870

SERVICE TOOLS

10 6900

VISORS, ASSIST HANDLES & MIRRORS

BODY (4/4)

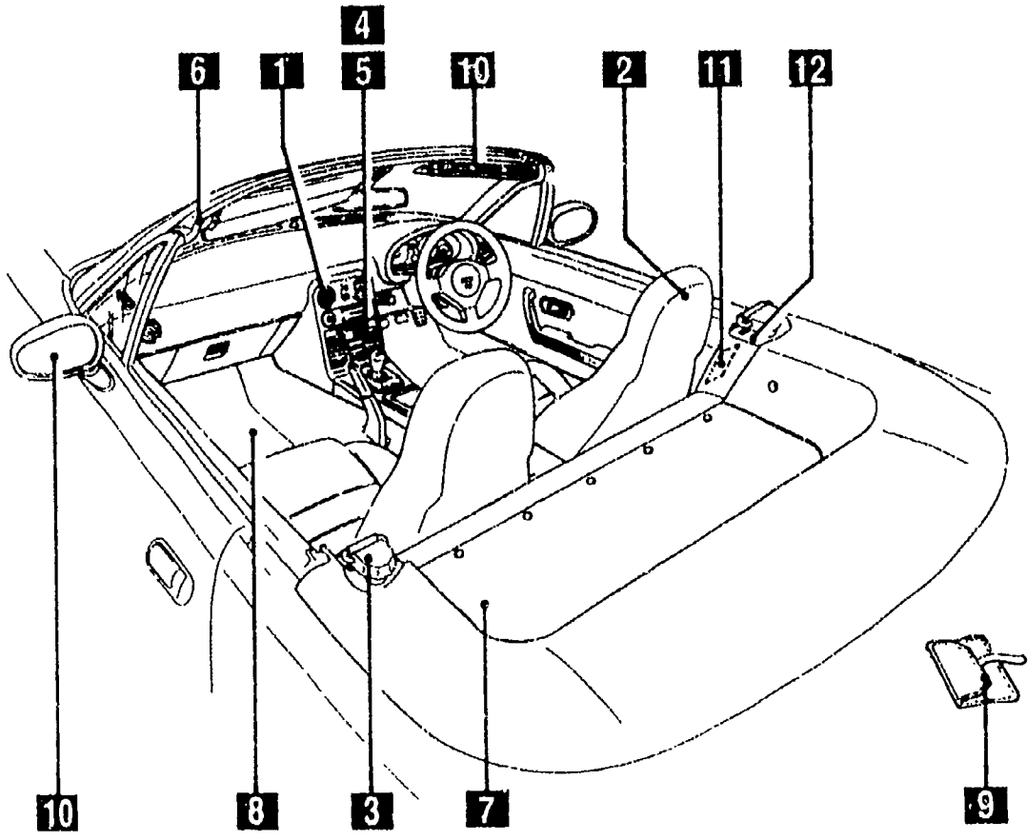

As this illustration is prepared to be applicable to all models, some parts are different in specifications from parts listed in this parts Catalog.

12 7250

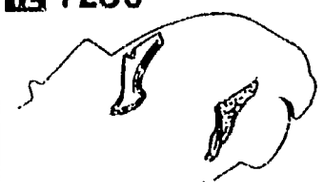

QUARTER WINDOW & TRIMS

11 6930

CAUTION PLATES & LABELS

SECTION NAME INDEX (ENGINE)

LO.NO	SEC.NO	SECTION NAME	LO.NO	SEC.NO	SECTION NAME	LO.NO	SEC.NO	SECTION NAME
1-C03	1000	ENGINE & GASKET SETS	1-N09	1950	AUTOMATIC TRANSMISSION MANUAL LINKAGE SYSTEM			
1-E03	1010	CYLINDER HEAD & COVER	1-D10	1960	AUTOMATIC TRANSMISSION GASKET & SEAL KIT			
1-G03	1030	CYLINDER BLOCK						
1-H03	1040	OIL PAN & TIMING COVER						
1-J03	1100	PISTON, CRANKSHAFT & FLYWHEEL						
1-M03	1200	VALVE SYSTEM						
1-C04	1300	INLET MANIFOLD						
1-D04	1310	EXHAUST MANIFOLD						
1-E04	1320	FUEL SYSTEM						
1-G04	1325	FUEL DISTRIBUTOR						
1-H04	1330	AIR CLEANER						
1-J04	1364	THROTTLE BODY						
1-K04	1370	EMISSION CONTROL SYSTEM (INLET SIDE)						
1-M04	1400	OIL PUMP & FILTER						
1-C05	1500	COOLING SYSTEM						
1-F05	1580	BRACKET, PULLEY & BELT						
1-C06	1600	CLUTCH DISC & COVER						
1-D06	1700	MANUAL TRANSMISSION CASE						
1-F06	1710	MANUAL TRANSMISSION GEARS						
1-K06	1720	MANUAL TRANSMISSION CHANGE CONTROL SYSTEM						
1-N06	1800	ENGINE ELECTRICAL SYSTEM						
1-D07	1830	ALTERNATOR						
1-F07	1840	STARTER (MT)						
1-H07	1840 A	STARTER (AT)						
1-J07	1850	BATTERY						
1-K07	1910	AUTOMATIC TRANSMISSION TORQUE CONVERTER, OIL PUMP & PIPINGS						
1-N07	1920	AUTOMATIC TRANSMISSION CASE & MAIN CONTROL SYSTEM						
1-H08	1925	AUTOMATIC TRANSMISSION CONTROL VALVE						
1-C09	1930	AUTOMATIC TRANSMISSION CLUTCHES & PLANETARY GEARS						
1-K09	1940	AUTOMATIC TRANSMISSION GOVERNOR, LOW & REVERSE PISTON						

SECTION NAME INDEX (CHASSIS)

LO.NO	SEC.NO	SECTION NAME	LO.NO	SEC.NO	SECTION NAME	LO.NO	SEC.NO	SECTION NAME
2-C03	2500	REAR PROPELLER SHAFT	2-G07	4340 A	BRAKE MASTER CYLINDER & POWER BRAKE (W/ANTI LOCK BRAKE)			
2-D03	2550	REAR DRIVE SHAFT						
2-E03	2600	REAR AXLE	2-I07	4360	BRAKE PIPINGS (W/O ANTI LOCK BRAKE)			
2-F03	2610	REAR BRAKE MECHANISMS	2-K07	4360 A	BRAKE PIPINGS (W/ANTI LOCK BRAKE)			
2-H03	2710	REAR DIFFERENTIALS (NORMAL DIFF.)	2-C08	4370	ANTILOCK BRAKE SYSTEM			
2-L03	2710 A	REAR DIFFERENTIALS (LIMITED SLIP DIFF.)	2-F08	4400	PARKING BRAKE SYSTEM			
2-D04	2800	REAR SUSPENSION MECHANISMS	2-H08	4500	FUEL PIPINGS			
2-E04	2810	REAR STABILIZER	2-J08	4600	CHANGE CONTROL SYSTEM (AT)			
2-F04	2830	REAR LOWER ARMS & SUB FRAME						
2-H04	3200	STEERING WHEEL						
2-I04	3210	STEERING COLUMN & SHAFTS						
2-J04	3220	STEERING GEAR (W/O POWER STEERING)						
2-L04	3220 A	STEERING GEAR (W/POWER STEERING)						
2-N04	3240	POWER STEERING SYSTEM						
2-D05	3300	FRONT AXLE						
2-F05	3310	FRONT BRAKE MECHANISMS						
2-G05	3400	FRONT SUSPENSION MECHANISMS						
2-J05	3410	CROSSMEMBER & STABILIZER						
2-K05	3700	TIRES & JACK						
2-C06	3900	ENGINE & T/MISSION MOUNTINGS						
2-D06	4000	EXHAUST SYSTEM						
2-E06	4140	MANUAL TRANSMISSION CLUTCH RELEASE & MASTER CYLINDERS						
2-F06	4145	MANUAL TRANSMISSION CLUTCH PIPINGS						
2-G06	4160	ACCELERATOR CONTROL SYSTEM						
2-H06	4200	FUEL TANK						
2-K06	4210	FUEL LID OPENER						
2-L06	4300	MANUAL TRANSMISSION CLUTCH & BRAKE PEDALS						
2-C07	4300A	AUTOMATIC TRANSMISSION BRAKE PEDAL						
2-E07	4340	BRAKE MASTER CYLINDER & POWER BRAKE (W/O ANTI LOCK BRAKE)						

SECTION NAME INDEX (BODY)

LO.NO	SEC.NO	SECTION NAME
2-C10	0900	KEY SETS
2-E10	5000	FRONT BUMPER
2-H10	5010	REAR BUMPER
2-J10	5030	WINDOW MOULDING & COWL GRILLES
2-K10	5100	HEAD LAMPS
2-L10	5103	HEAD LAMP RETRACTORS
2-C11	5105	FRONT COMBINATION LAMPS
2-E11	5110	REAR COMBINATION LAMPS
2-I11	5120	LICENSE LAMPS
2-J11	5125	INTERIOR LAMPS
2-K11	5170	ORNAMENTS
2-L11	5180	REAR FINISHER
2-M11	5230	BONNET
2-C12	5260	TRUNK LID
2-D12	5310	FRONT PANELS
2-E12	5320	FENDER & WHEEL APRON PANELS
2-H12	5330	DASH & COWL PANELS
2-I12	5340	SIDE PANELS
2-C13	5370	FLOOR PANELS
2-F13	5380	FLOOR ATTACHMENTS (HOLE COVERS)
2-H13	5390	FLOOR ATTACHMENTS
2-C14	5500	DASHBOARD EQUIPMENTS
2-E14	5520	METER HOOD
2-F14	5530	SPEEDOMETER CABLE
2-G14	5540	METER COMPONENTS
2-I14	5560	DASHBOARD & RELATED PARTS
2-L14	5570	CONSOLE
2-D15	5580	VENTILATOR
2-F15	5700	SEATS
2-H16	5790	SEAT BELTS
2-I16	5795	AIR BAG
2-J16	5800	FRONT DOORS
3-C03	5830	FRONT DOOR MECHANISMS
3-G03	5840	FRONT DOOR TRIMS & RELATED PARTS
3-C04	6100	HEATER
3-D04	6110	HEATER UNIT COMPONENTS
3-E04	6115	HEATER CONTROL COMPONENTS
3-F04	6120	HEATER BLOWER COMPONENTS
3-G04	6130	AIR CONDITIONER
3-L04	6135	AIR CONDITIONING COOLING PIPE O-RING
3-M04	6140	AIR CONDITIONING COMPRESSOR COMPONENTS
3-C05	6150	AIR CONDITIONING COOLING UNIT
3-D05	6300	WINDOW GLASSES
3-E05	6330	SUN ROOF
3-F06	6600	ENGINE SWITCHES & RELAYS
3-K06	6610	DASHBOARD SWITCHES
3-M06	6611	COMBINATION SWITCH
3-N06	6630	BODY RELAYS & UNIT
3-D07	6635	DOOR SWITCH & HORNS
3-E07	6640	AUTO CRUISE CONTROL SYSTEM
3-F07	6680	AUDIO SYSTEMS (RADIO & TAPE DECK)
3-I07	6682	AUDIO SYSTEMS (ANTENNA & SPEAKER)
3-L07	6700	FRONT & REAR WIRING HARNESSES
3-C08	6701	ENGINE & TRANSMISSION WIRING HARNESSES
3-E08	6702	DASHBOARD WIRING HARNESSES
3-F08	6703	DOOR, FLOOR & CEILING WIRING HARNESSES
3-G08	6704	WIRING HARNESS CLAMPS
3-J08	6720	WINDSHIELD WASHER (W/O ANTI LOCK BRAKE)
3-L08	6720 A	WINDSHIELD WASHER (W/ANTI LOCK BRAKE)
3-C09	6730	WINDSHIELD WIPERS
3-E09	6740	WIPER MOTOR COMPONRNTS
3-F09	6820	FRONT HEADER TRIM & PILLAR TRIMS
3-G09	6840	TRIMS & SCUFF PLATES
3-I09	6860	FLOOR MATS & PADS
3-K09	6870	SERVICE TOOLS
3-L09	6900	SUN VISORS, ASSIST HANDLES & MIRRORS
3-C10	6930	CAUTION PLATES & LABELS
3-E10	7250	QUARTER WINDOW & TRIMS

5830 -1 FRONT DOOR MECHANISMS

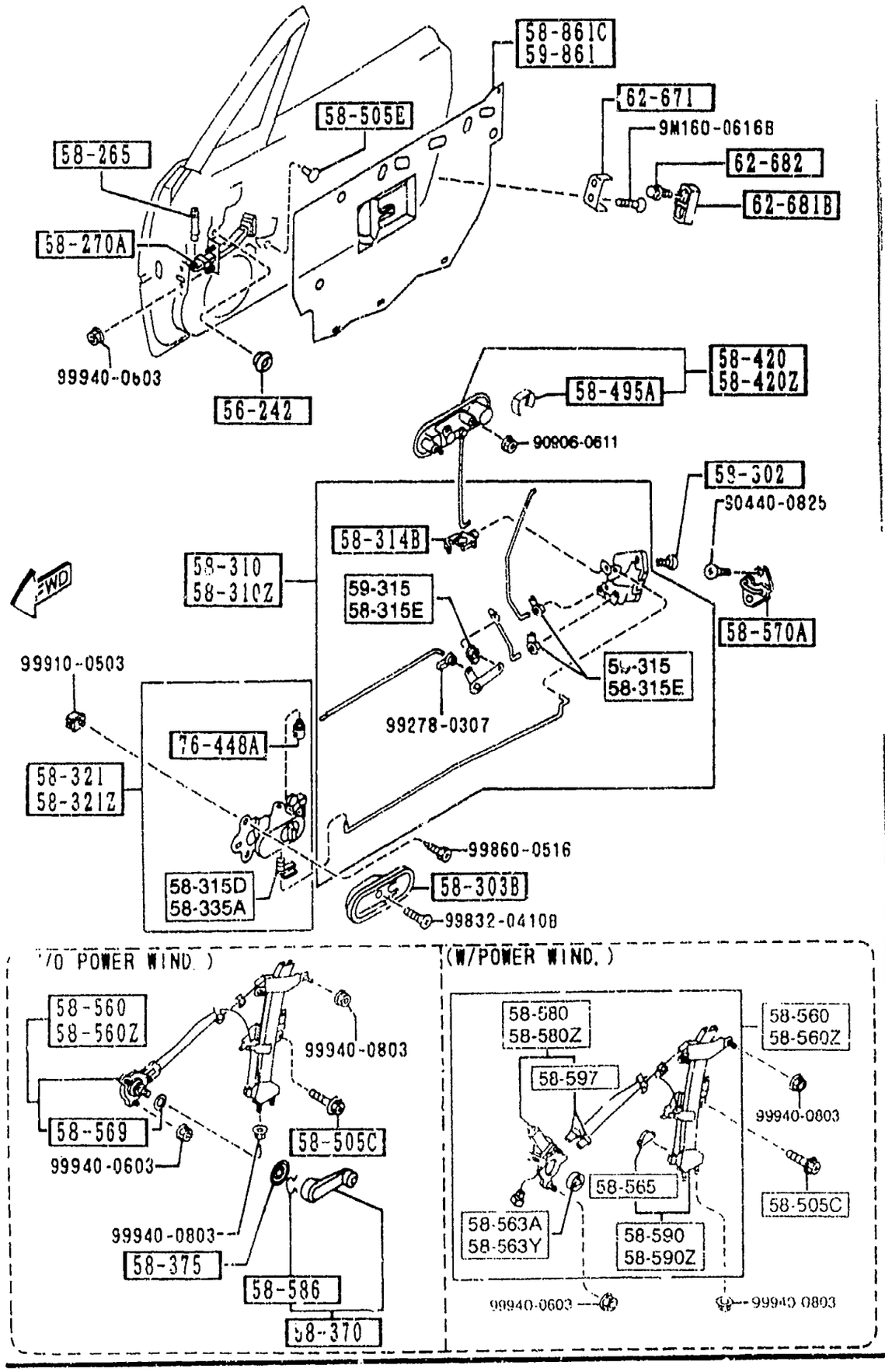

PART NO.	QTY	MODEL/RESTRICTION	MODEL/RESTRICTION	MODEL/RESTRICTION	FROM-TO
56-242		PLUG,DRAIN			
0118-56-242B	2				
58-265		PIN,CHECKER			
BC1D-58-265	2				
58-270A		CHECKER,DOOR			
NA01-58-270B	2				
58-302		SCREW,TAPPING-DOOR LOCK			
HG30-58-302A	6				
58-303B		COVER,INNER HANDLE			
NA01-58-303	2				
00	INT-	NA3 NA5 BLACK			
58-310		LOCK(R),DOOR			
NA01-58-310B	1				
58-310Z		LOCK(L),DOOR			
NA01-59-310B	1				
58-314B		JOINT			
H043-72-411	2				
58-315D		CLIP (R)			
B001-59-335	1				
58-315E		CLIP (L)			
G030-58-315	3				
58-321		HANDLE(R),INNER			
NA01-58-330C	1				
00	INT-	NA3 NA5 BLACK			
58-321Z		HANDLE(L),INNER			
NA01-59-330C	1				
00	INT-	NA3 NA5 BLACK			
58-335A		CLIP			

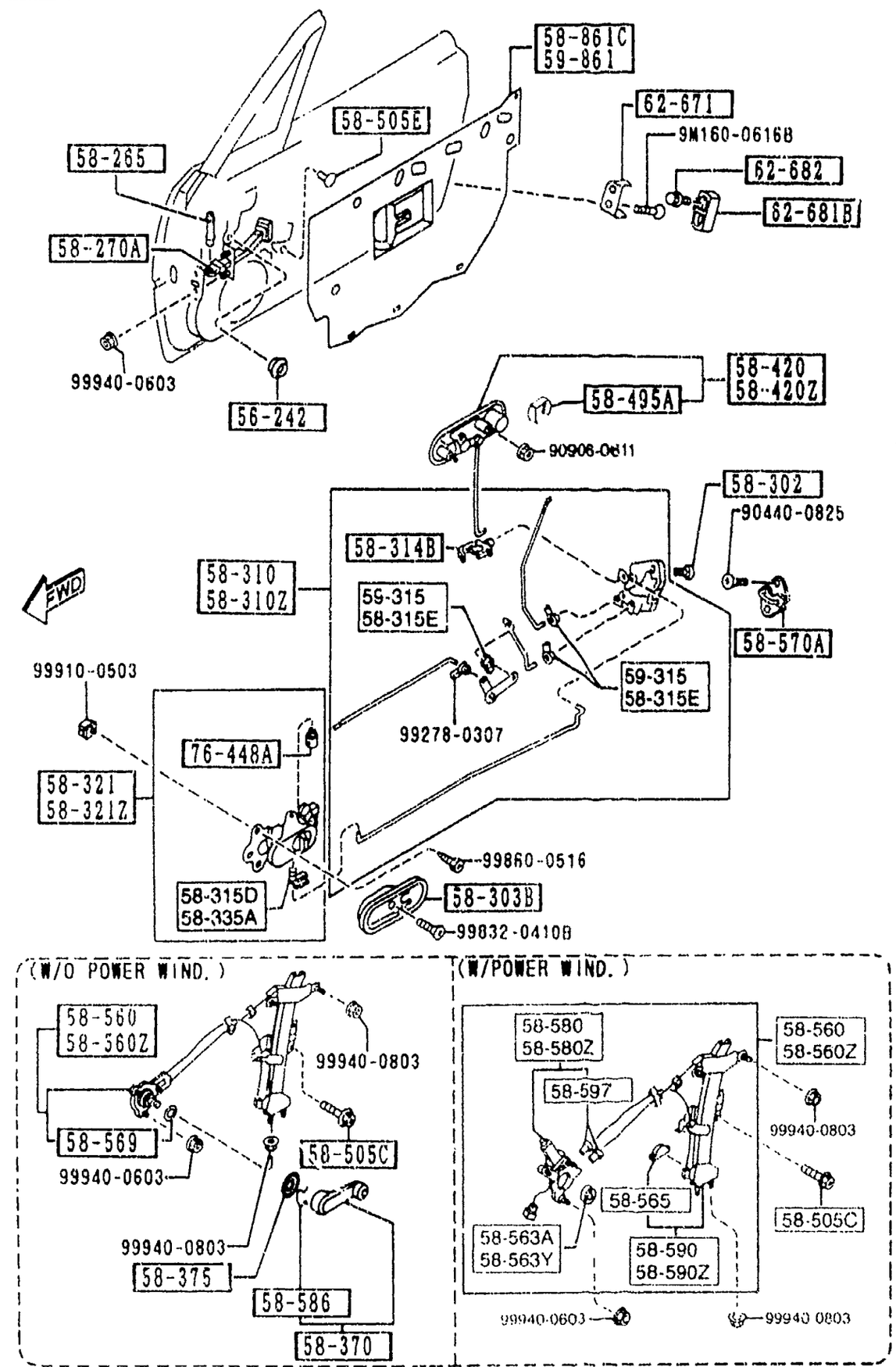

PART NO	QTY	MODEL/RESTRICTION	MODEL/RESTRICTION	MODEL/RESTRICTION	FROM TO
CONT'D					
FB01-58-335	1	(FOR LEFT)			
58-370		HANDLE,REGULATOR			
S084-58-580A	2	BASE, R-PKG, (W/O POWER WIND.)			
00	INT-	NA3 NA5 BLACK			
58-375		ESCUTCHEON			
B001-58-582A	2	BASE, R-PKG, (W/O POWER WIND.)			
00	INT-	NA3 NA5 BLACK			
58-420		HANDLE(R),OUTER			
NA01-58-410D	1				
58-420Z		HANDLE(L),OUTER			
NA01-59-410D	1				
58-495A		RETAINER,LOCK CYL.			
G211-58-495	2				
58-505C		SCREW,WINDOW REGULATOR			
B092-58-505	6				
58-505E		CAP			
B092-58-355	2	BASE, R-PKG, (W/O POWER WIND.)			
58-560		REGULATOR(R),WINDOW			
NA01-58-560H	1	BASE, R-PKG, (W/O POWER WIND.)			
NA02-58-560K	1	F-SV, L-PKG, P.E.GR, T-PKG, (W/POWER WIND.)			
58-560Z		REGULATOR(L),WINDOW			
NA01-59-560H	1	BASE, R-PKG, (W/O POWER WIND.)			
NA02-59-560K	1	F-SV, L-PKG, P.E.GR, T-PKG, (W/POWER WIND.)			
58-563A		DRUM(R),POWER WINDOW REG.			
*NA02-58-563	1	F-SV, L-PKG, P.E.GR,			

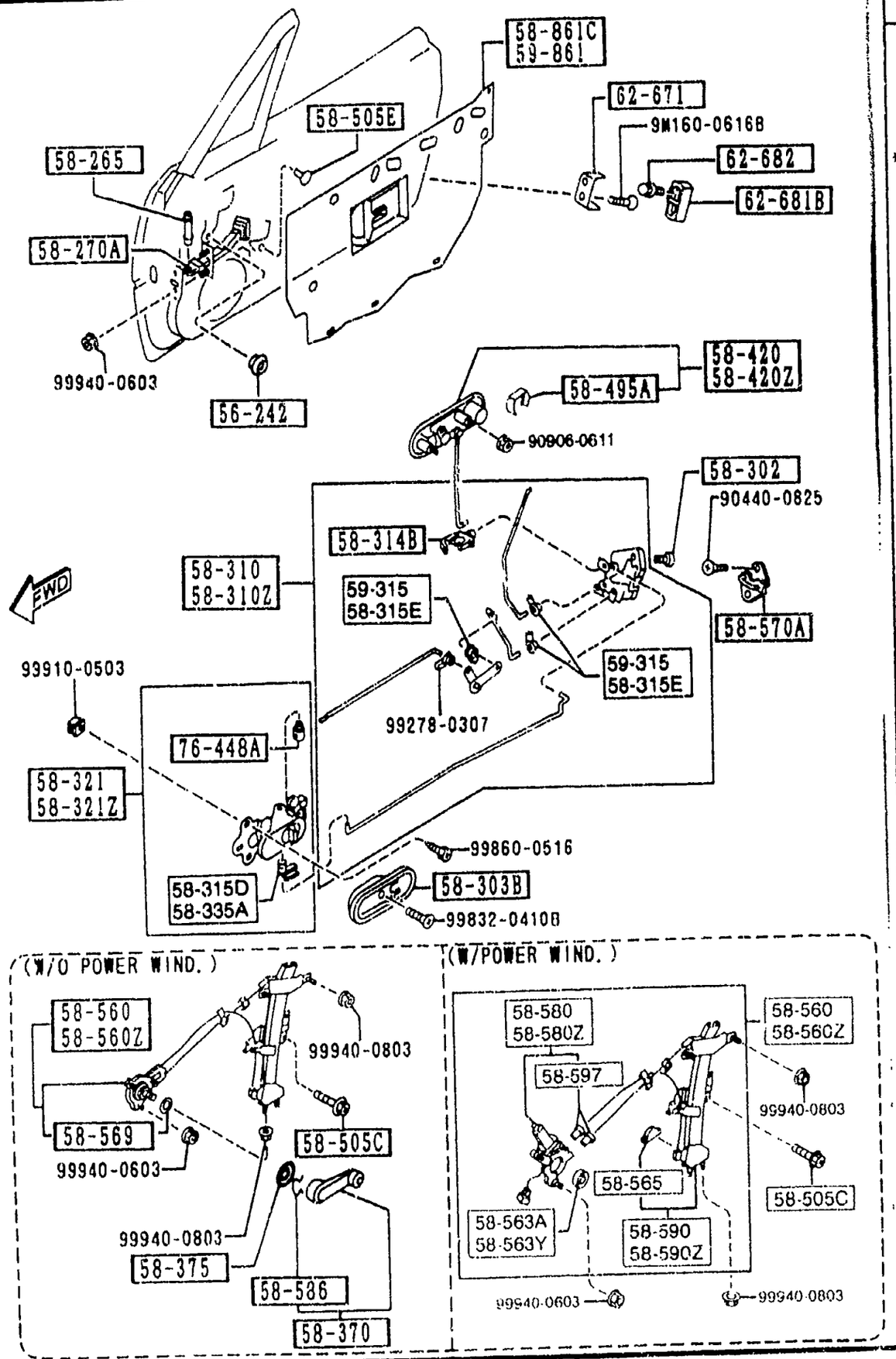

AUNA06

PART NO	QTY	MODEL/RESTRICTION	MODEL/RESTRICTION	MODEL/RESTRICTION	FROM-TO
CONT'D		T-PKG, (W/POWER WIND.)			
58-563Y *NA02-59-563	1	DRUM(L),POWER WINDOW REG F-SV, L-PKG, P.E.GR, T-PKG, (W/POWER WIND.)			
58-565 HG30-58-565	2	RUBBER,STOPPER F-SV, L-PKG, P.E.GR, T-PKG, (W/POWER WIND.)			
58-569 B092-58-569	2	GASKET,WINDOW REGULATOR BASE, R-PKG, (W/O POWER WIND.)			
58-570A B001-58-361A	2	STRIKER			
58-580 *NA02-58-58X	1	MOTOR(R),WINDOW F-SV, L-PKG, P.E.GR, T-PKG, (W/POWER WIND.)			
58-580Z *NA02-59-58X	1	MOTOR(L),WINDOW F-SV, L-PKG, P.E.GR, T-PKG, (W/POWER WIND.)			
58-586 B001-58-585	2	RING,SNAP BASE, R-PKG, (W/O POWER WIND.)			
58-590 *NA02-58-590	1	ARM/BASE(R),WINDOW F-SV, L-PKG, P.E.GR, T-PKG, (W/POWER WIND.)			
58-590Z *NA02-59-590	1	ARM/BASE(L),WINDOW F-SV, L-PKG, P.E.GR, T-PKG, (W/POWER WIND.)			
58-597 *NA02-58-564	4	BOLT,COVER-REG. GUIDE F-SV, L-PKG, P.E.GR, T-PKG, (W/POWER WIND.)			

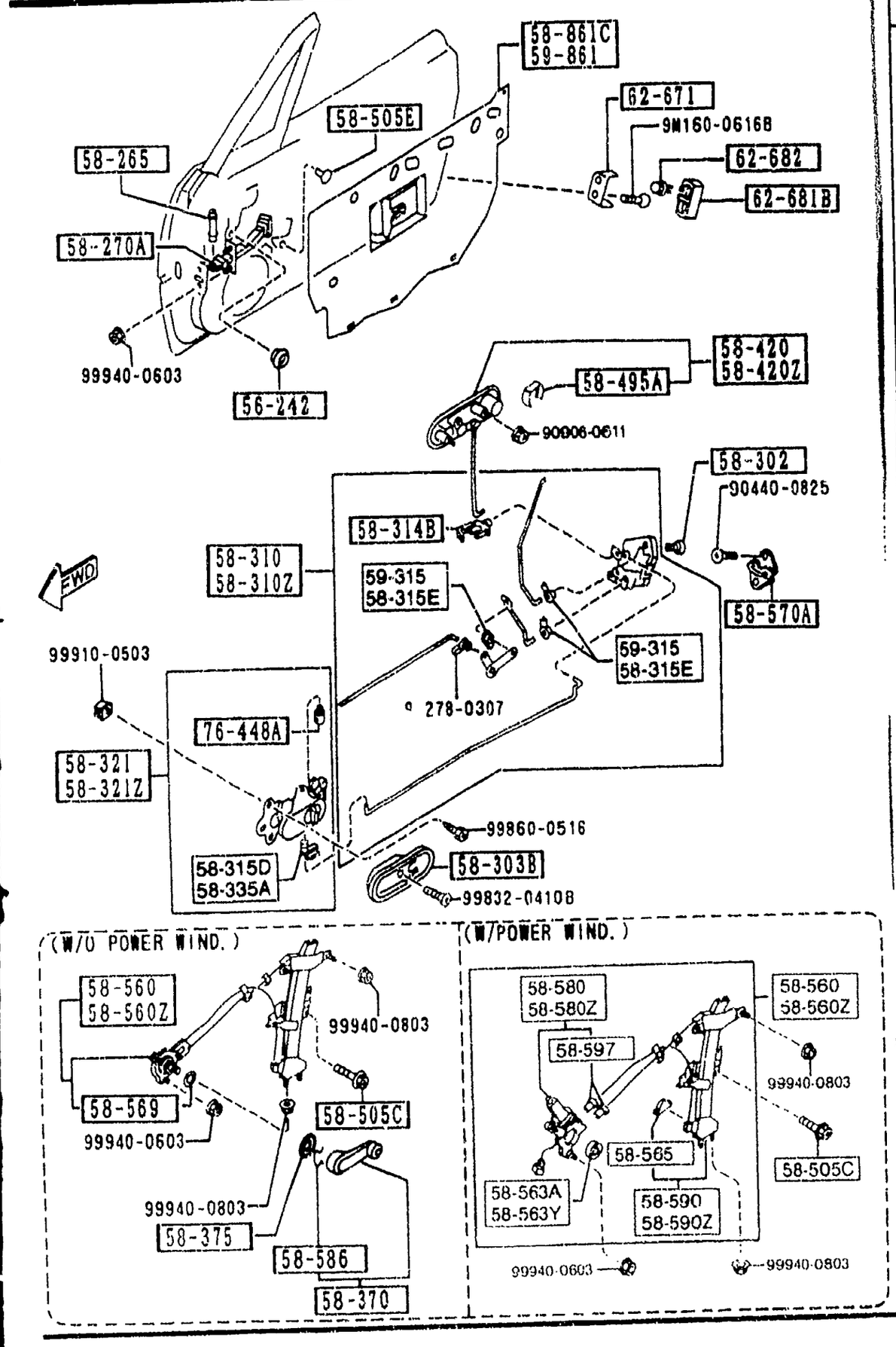

PART NO.	QTY	MODEL/RESTRICTION	MODEL/RESTRICTION	MODEL/RESTRICTION	FROM-TO
58-861C		SCREEN(R),FRONT DOOR			
NA01-58-861A	1	BASE, R-PKG, (W/O POWER WIND.)			
NA02-58-861A	1	F-SV, L-PKG, P.E.GR, T-PKG, (W/POWER WIND.)			
59-315		CLIP			
G030-59-315	3	(FOR RIGHT)			
59-861		SCREEN(L),FRONT DOOR			
NA01-59-861A	1	BASE, R-PKG, (W/O POWER WIND.)			
NA02-59-861A	1	F-SV, L-PKG, P.E.GR, T-PKG, (W/POWER WIND.)			
62-671		DOVETAIL,LIFT GATE			
S084-62-671	2				-7401
AN(S084-62-671A)					
S084-62-671A	2				7401-
62-681B		WEDGE,DOOR-FRONT			
NA01-62-681	2				
62-682		SCREW,WEDGE-LIFT GATE			
B216-62-682	4				
76-448A		CLIP			
G030-76-448	2				

7401 NA35*V-734532

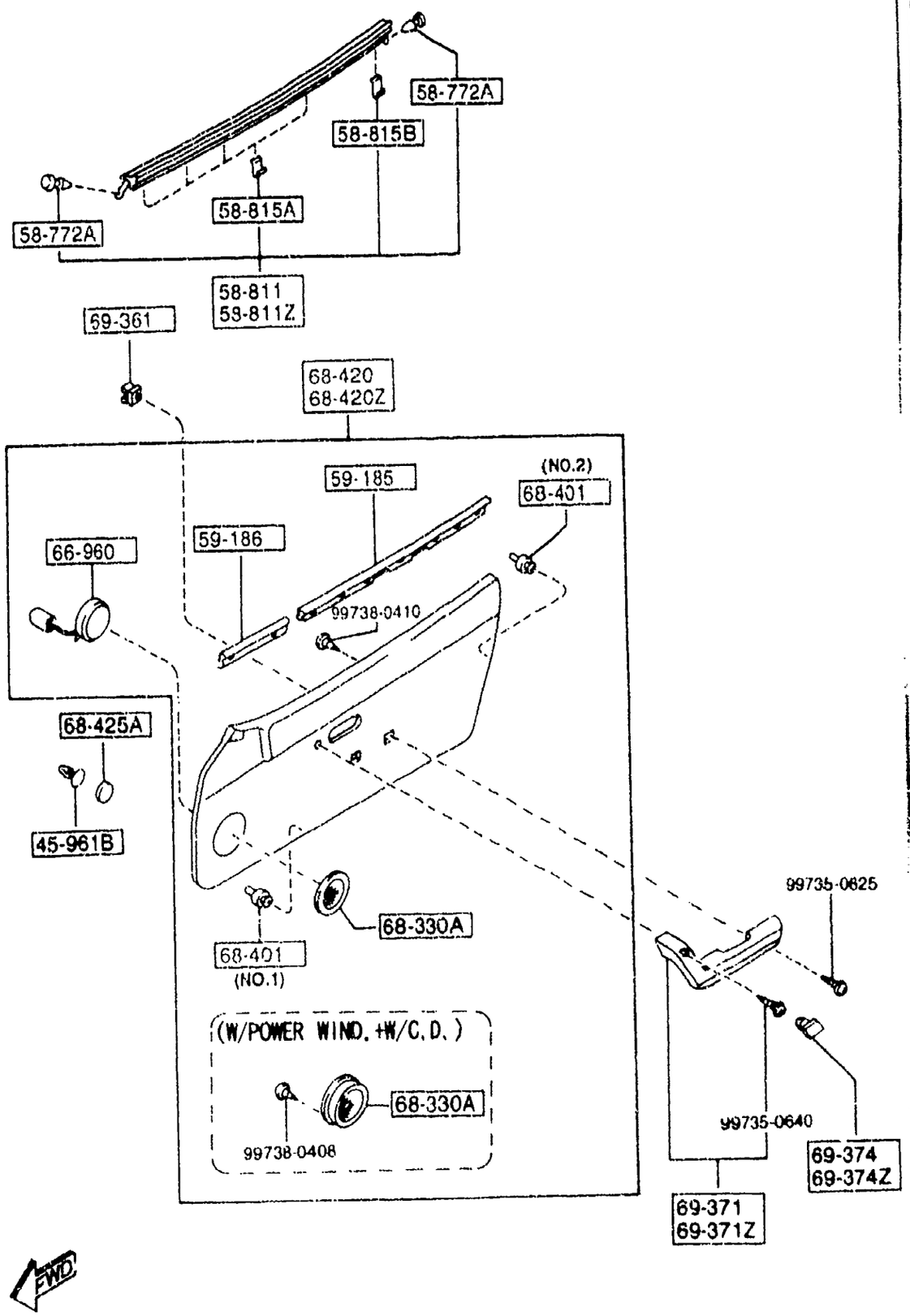

PART NO	QTY	MODEL/RESTRICTION	MODEL/RESTRICTION	MODEL/RESTRICTION	FROM-TO
45-961B		CAP			
H002-45-961	4				
58-772A		FASTENER			
1011-58-772	4				
58-811		WEATHERSTRIP(R),OUT.			
NA01-58-810D	1				
58-811Z		WEATHERSTRIP(L),OUT.			
NA01-59-810D	1				
58-815A		CLIP,WEATHERSTRIP-OUTER			
NA01-58-815	8				
58-815B		CLIP'A',WEATHERSTRIP-OUT			
A157-58-815	2				
59-185		WEATHERSTRIP NO.1			
NA01-58-821	2				-7901
AN(NA01-58-821A)					
*NA01-58-821A	2				7901-
59-186		WEATHERSTRIP NO.2			
NA02-58-821	2				
66-960		SPEAKER,LOUD-FRONT			
NB42-66-960	2	(W/C.D.)			
68-330A		GRILLE,SPEAKER			
BR72-68-350A	2	(W/POWER WIND.+W/C.D.)			
60	INT-	NA, NA4 NA5 DARK GRAY/OFF-BLACK			
A004-68-5H0	2	BASE, R-PKG, (W/O POWER WIND.) (W/POWER WIND.+W/O C.D.)			
00	INT-	NA3 NA5 NA7 BLACK			
68-401		FASTENER,DOOR TRIM			
B100-68-401	14	(ILLUST. NO.1)			

7901 NA35*V-739040

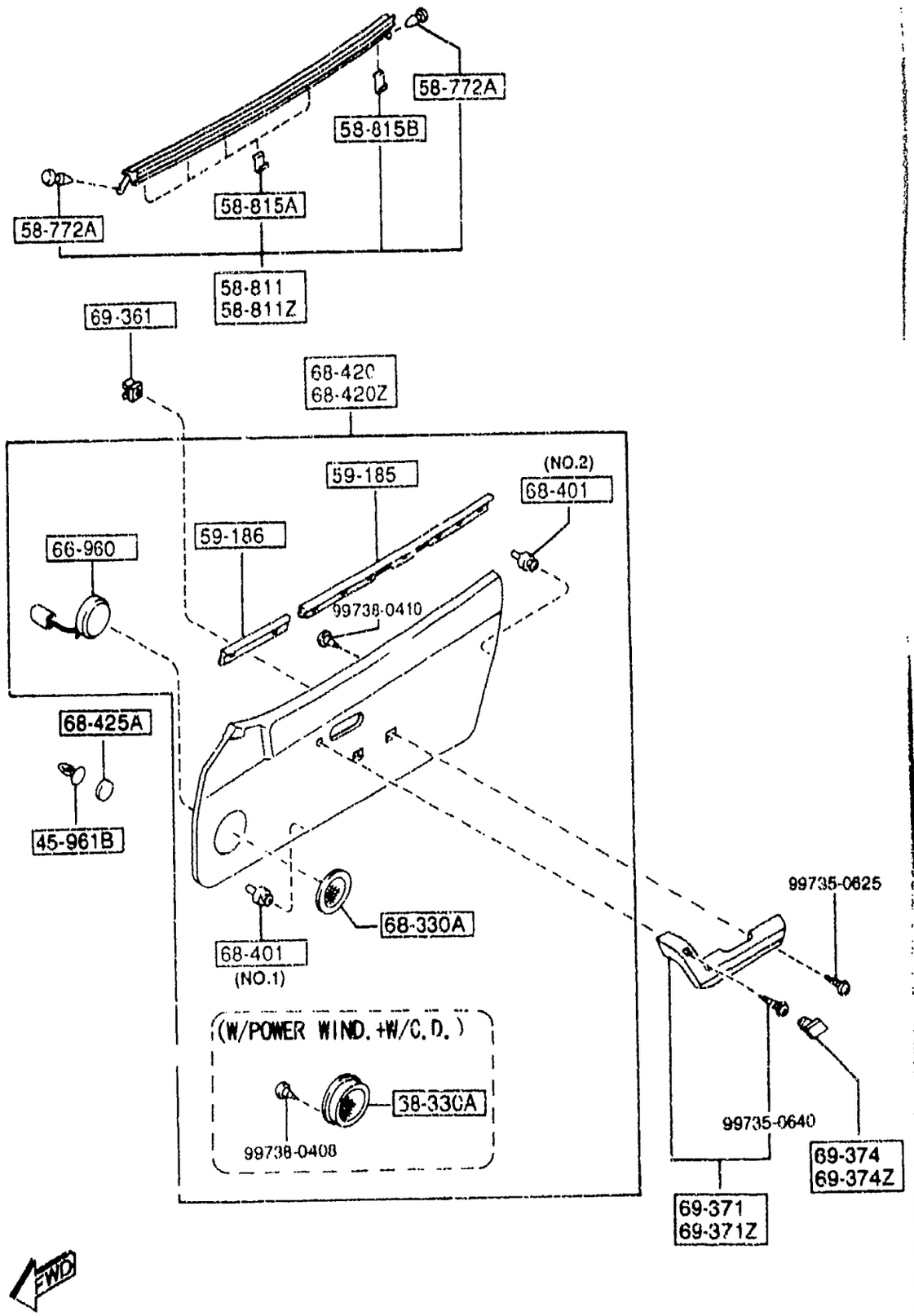

PART NO	QTY	MODEL/RESTRICTION	MODEL/RESTRICTION	MODEL/RESTRICTION	FROM-TO
CONT'D					
W201-68-401	12	(ILLUST. NO.2)			
+---------+					
| 68-420 |		TRIM(R),DOOR			
+---------+					
NB85-68-420B	1	(W/POWER WIND.+W/O C.D.)			-7301
00	INT-	NA3 BLACK			
80	INT-	NA5 BLACK/TAN			
NB87-68-420B	1	(W/POWER WIND.+W/C.D.)			-7301
00	INT-	NA3 BLACK			
80	INT-	NA5 BLACK/TAN			
NB84-68-420A	1	(W/O POWER WIND.+W/O C.D.)			-7901
00	INT-	NA3 NA7 BLACK			
NB86-68-420A	1	(W/O POWER WIND.+W/C.D.)			-7901
00	INT-	NA3 NA7 BLACK			
NB85-68-420C	1	(W/POWER WIND.+W/O C.D.)			7301-7901
00	INT-	NA3 BLACK			
80	INT-	NA5 BLACK/TAN			
NB87-68-420C	1	(W/POWER WIND.+W/C.D.)			7301-7901
00	INT-	NA3 BLACK			
80	INT-	NA5 BLACK/TAN			
*NB84-68-420B	1	(W/O POWER WIND.+W/O C.D.)			7901-
* 00	INT-	NA3 NA7 BLACK			
*NB85-68-420D	1	(W/POWER WIND.+W/O C.D.)			7901-
* 00	INT-	NA3 BLACK			
* 80	INT-	NA5 BLACK/TAN			
*NB86-68-420B	1	(W/O POWER WIND.+W/C.D.)			7901-
* 00	INT-	NA3 NA7 BLACK			
*NB87-68-420D	1	(W/POWER WIND.+W/C.D.)			7901-
* 00	INT-	NA3 BLACK			
* 80	INT-	NA5 BLACK/TAN			

7301 NA35*V-732210
7901 NA35*V-739040

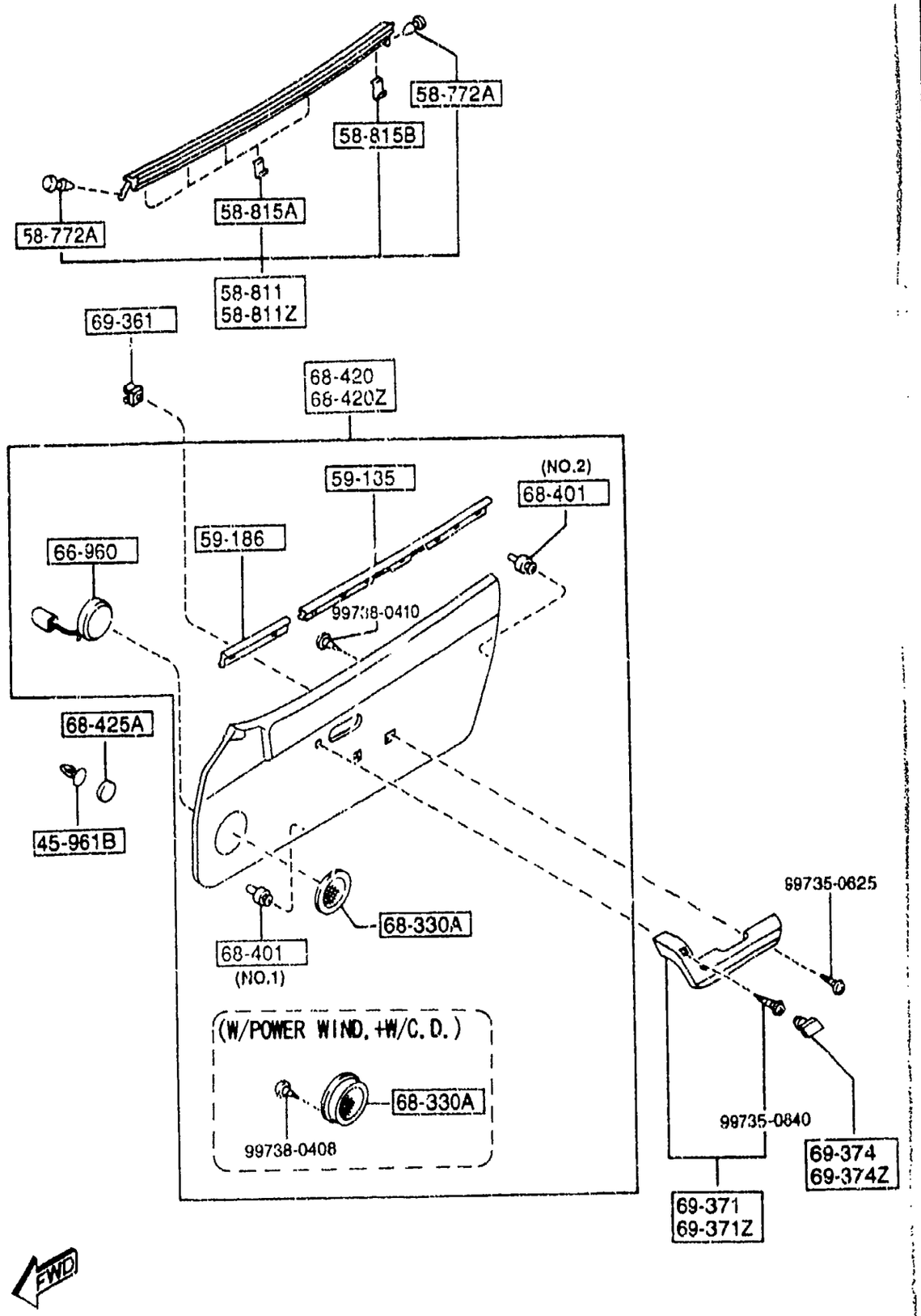

PART NO.	QTY	MODEL/RESTRICTION	MODEL/RESTRICTION	MODEL/RESTRICTION	FROM-TO
+----------+		TRIM(L),DOOR			
| 68-420Z |					
+----------+					
NB85-68-450B	1	(W/POWER WIND.+W/O C.D.)			-7301
00	INT-	NA3 BLACK			
80	INT-	NA5 BLACK/TAN			
NB87-68-450B	1	(W/POWER WIND.+W/C.D.)			-7301
00	INT-	NA3 BLACK			
80	INT-	NA5 BLACK/TAN			
NB84-68-450A	1	(W/O POWER WIND.+W/O C.D.)			-7901
00	INT-	NA3 NA7 BLACK			
NB86-68-450A	1	(W/O POWER WIND.+W/C.D.)			-7901
00	INT-	NA3 NA7 BLACK			
NB85-68-450C	1	(W/POWER WIND.+W/O C.D.)			7301-7901
00	INT-	NA3 BLACK			
80	INT-	NA5 BLACK/TAN			
NB87-68-450C	1	(W/POWER WIND.+W/C.D.)			7301-7901
00	INT-	NA3 BLACK			
80	INT-	NA5 BLACK/TAN			
*NB84-68-450B	1	(W/O POWER WIND.+W/O C.D.)			7901-
* 00	INT-	NA3 NA7 BLACK			
*NB85-68-450D	1	(W/POWER WIND.+W/O C.D.)			7901-
* 00	INT-	NA3 BLACK			
* 80	INT-	NA5 BLACK/TAN			
*NB86-68-450B	1	(W/O POWER WIND.+W/C.D.)			7901-
* 00	INT-	NA3 NA7 BLACK			
*NB87-68-450D	1	(W/POWER WIND.+W/C.D.)			7901-
* 00	INT-	NA3 BLACK			
* 80	INT-	NA5 BLACK/TAN			
+----------+		COVER,HOLE			
| 68-425A |					
+----------+					
LA01-57-425A	2				

7301 NA35*V-732210
7901 NA35*V-739040

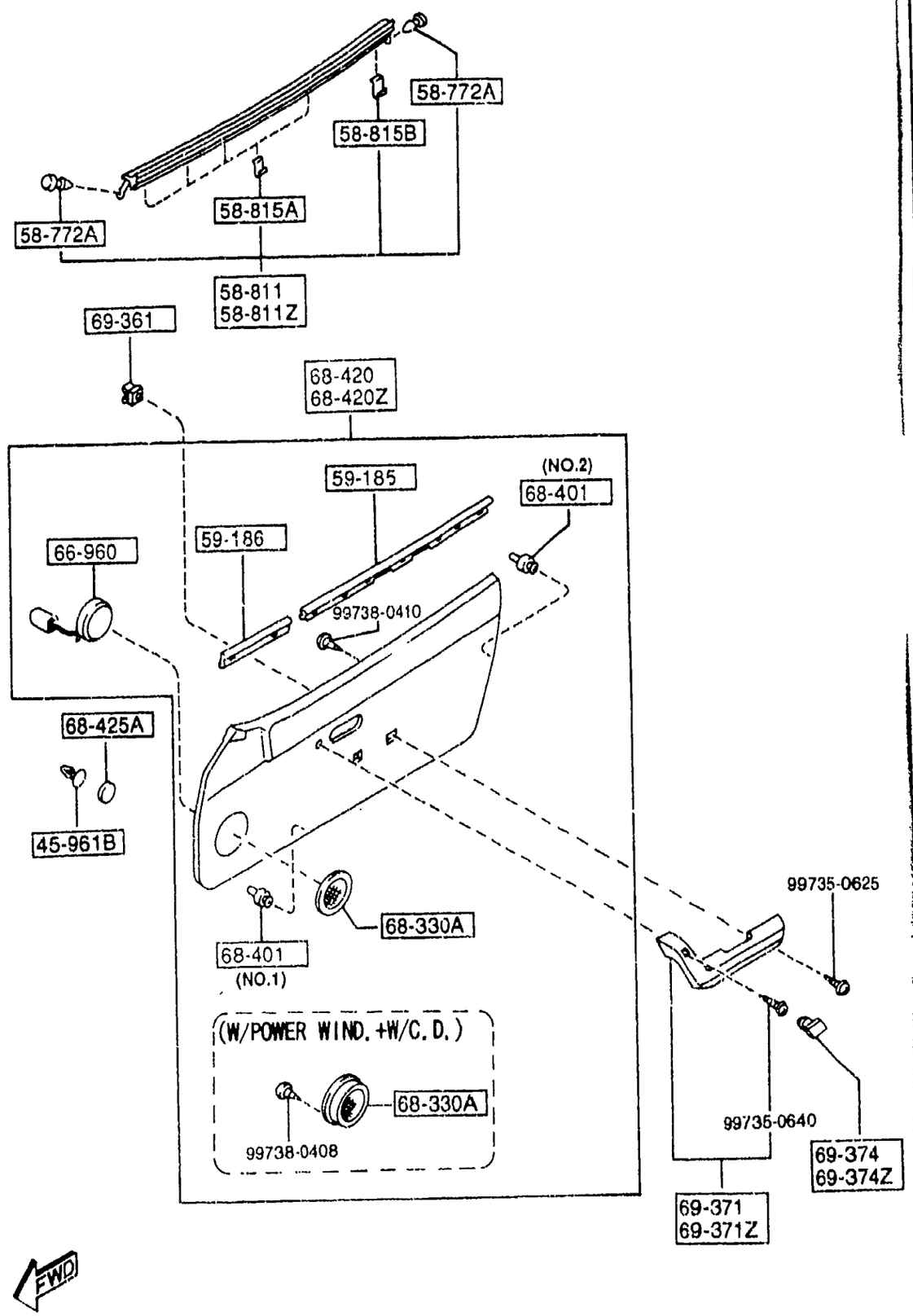

PART NO.	QTY	MODEL/RESTRICTION	MODEL/RESTRICTION	MODEL/RESTRICTION	FROM-TO
69-361		GROMMET,SCREW			
B316-69-361	6				
69-371		REST(R),ARM			
BF70-69-370C	1				
00	INT-	NA3 NA7 NA8 BLACK			
88	INT-	NA4 NA5 TAN			
69-371Z		REST(L),ARM			
BF70-69-390C	1				
00	INT-	NA3 NA7 NA8 BLACK			
88	INT-	NA4 NA5 TAN			
69-374		CAP(R),PULL HANDLE			
BF70-69-372	1				
00	INT-	NA3 NA7 NA8 BLACK			
88	INT-	NA4 NA5 TAN			
69-374Z		CAP(L),PULL HANDLE			
BF70-69-392	1				
00	INT-	NA3 NA7 NA8 BLACK			
88	INT-	NA4 NA5 TAN			

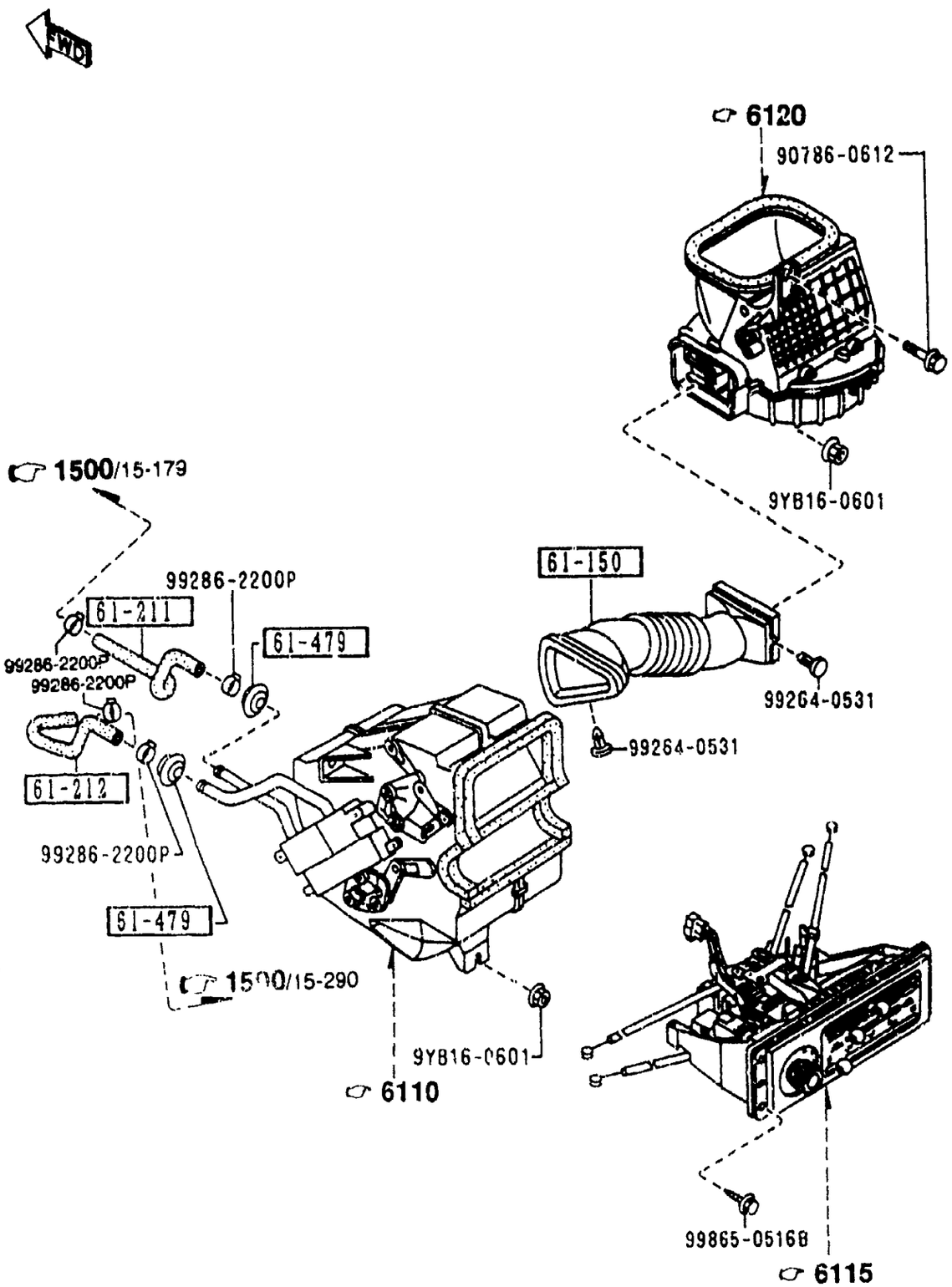

6100 -1 * HEATER

PART NO.	QTY	MODEL/RESTRICTION	MODEL/RESTRICTION	MODEL/RESTRICTION	FROM-TO
61-150		DUCT,AIR			
NA01-61-150A	1				
61-211		HOSE NO.1,WATER			
NA75-61-211	1				
61-212		HOSE NO.2,WATER			
NA75-61-212	1				
61-479		GROMMET			
8871-61-219A	2				

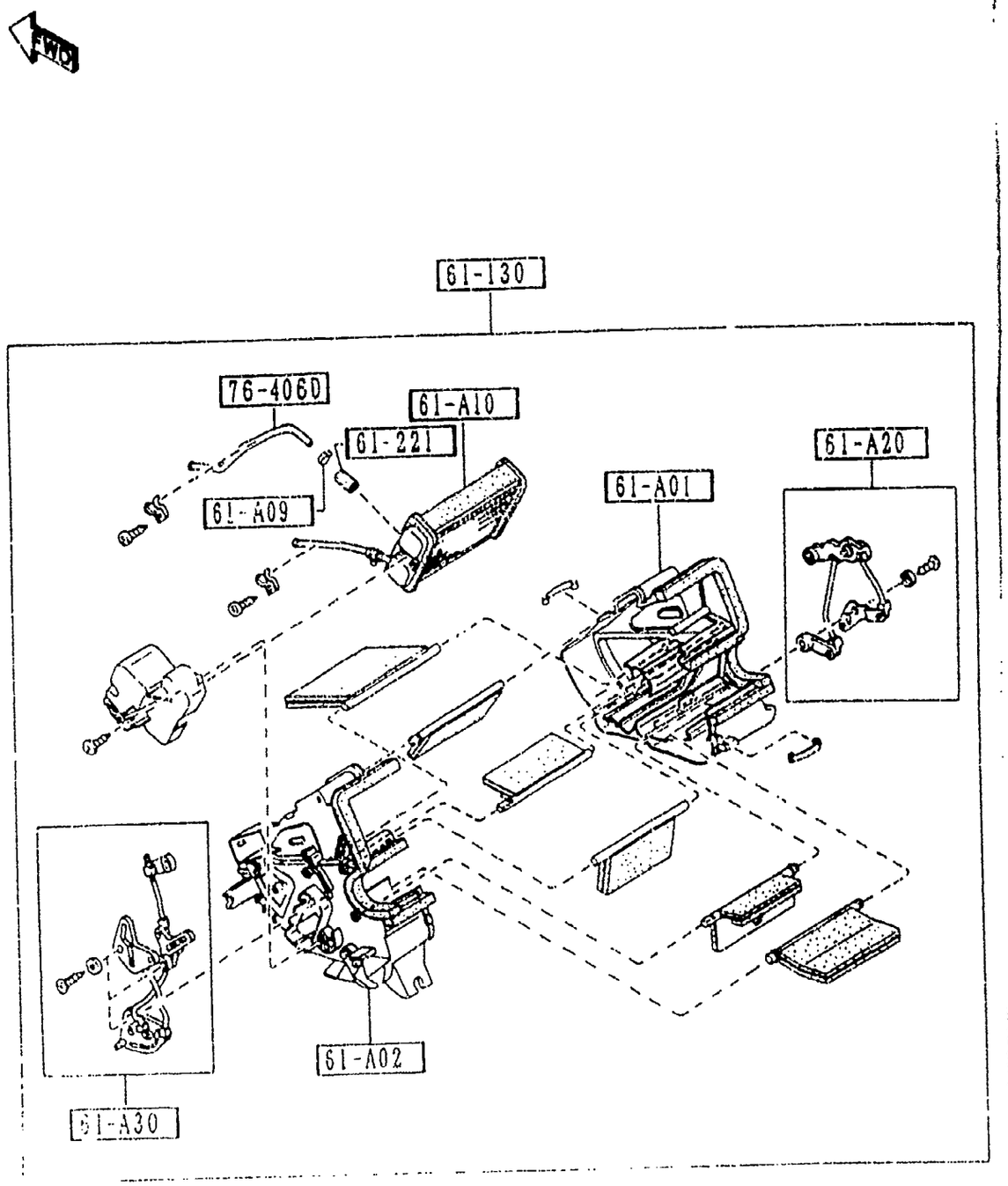

6110 -1 * HEATER UNIT COMPONENTS

PART NO.	QTY	MODEL/RESTRICTION	MODEL/RESTRICTION	MODEL/RESTRICTION	FROM-TO
61-A01		CASE'A',HEATER UNIT			
NA01-61-A01	1				
61-A02		CASE'B',HEATER UNIT			
NA01-61-A02	1				
61-A09		CLIP			
NA01-61-A09	1				
61-A10		CORE,HEATER UNIT			
NA75-61-A10	1				
61-A20		LINK SET,TEMP			
NA01-61-A20	1				
61-A30		LINK SET,MODE			
NA01-61-A30	1				
61-130		HEATER UNIT			
NA75-61-130	1				-7701
A (NA75-61-130A)					
*NA75-61-130A	1				7701-
61-221		HOSE,WATER			
NA01-61-A21	1				
76-406D		PIPE,HEATER UNIT			
NA75-61-A15	1				

7701 NA35*V-738443

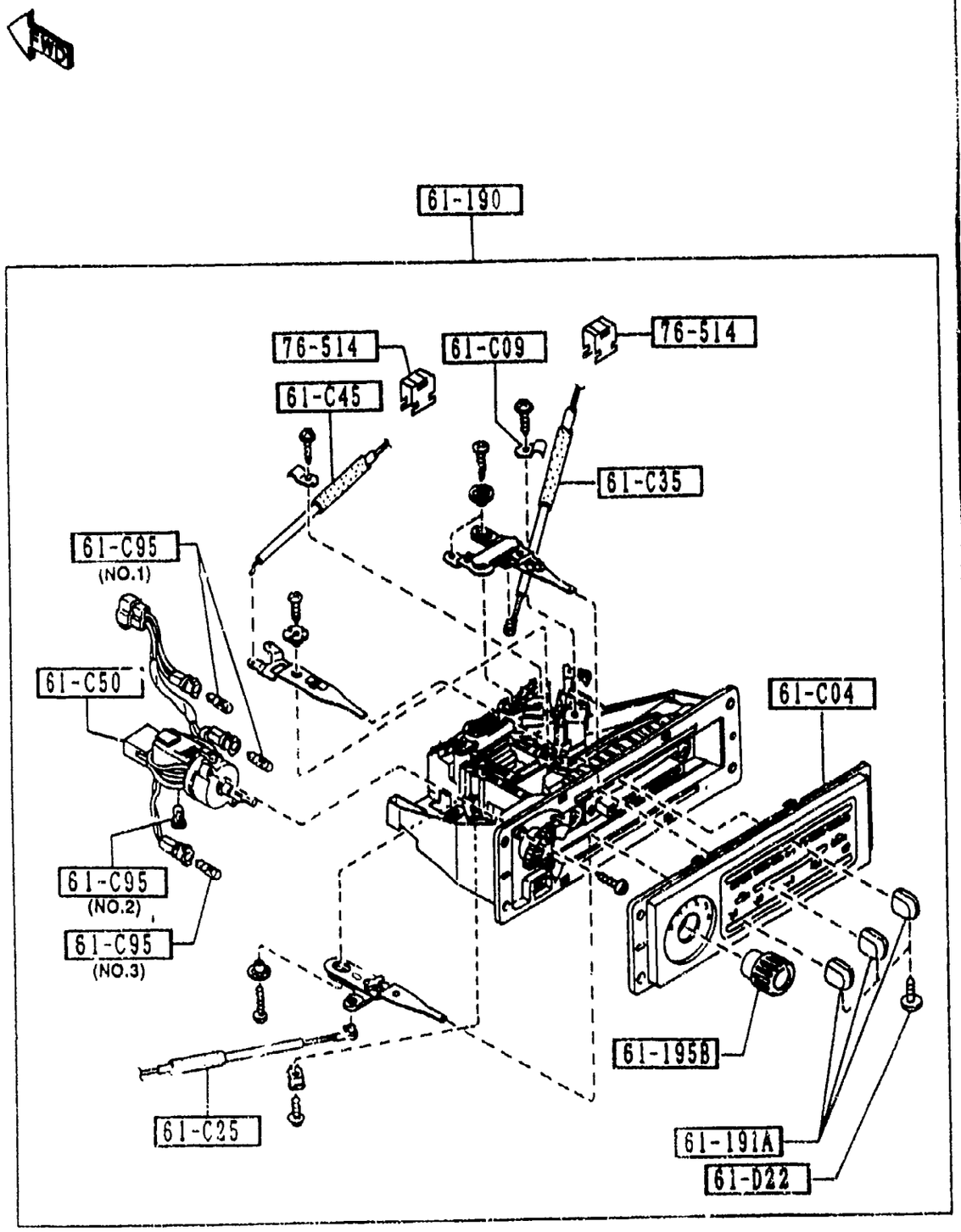

6115 -1 * HEATER CONTROL COMPONENTS

PART NO.	QTY	MODEL/RESTRICTION	MODEL/RESTRICTION	MODEL/RESTRICTION	FROM-TO
61-C04		PANEL,PLATE-MODE CONTROL			
NA01-61-C04A	1				
61-C09		CLIP,HEATER CONTROL			
H260-61-C09	1				
61-C25		WIRE,TEMP. CONTROL			
NA01-61-C25	1				
61-C35		WIRE,MODE CONTROL			
NA01-61-C35	1				
61-C45		WIRE,RECYCLE & FRESH			
NA75-61-C45	1				
61-C50		SWITCH,FAN-HEATER CONTROL			
NA01-61-C50A	1				
61-C95		BULB,MODE CONTROL			
NA01-61-C95	2	(ILLUST. NO.1)			
NA02-61-C95	1	(ILLUST. NO.2)			
NA03-61-C95A	1	(ILLUST. NO.3)			
61-D22		SCREW,RR HEATER UNIT			
NA01-61-D22	3				
61-190		CONTROL,HEATER			
NA75-61-190C	1				
61-191A		KNOB NO.1			
NA01-61-191	3				
61-195B		KNOB,FAN SWITCH			
NA01-61-195	1				
76-514		CLIP			
B001-76-526	2				

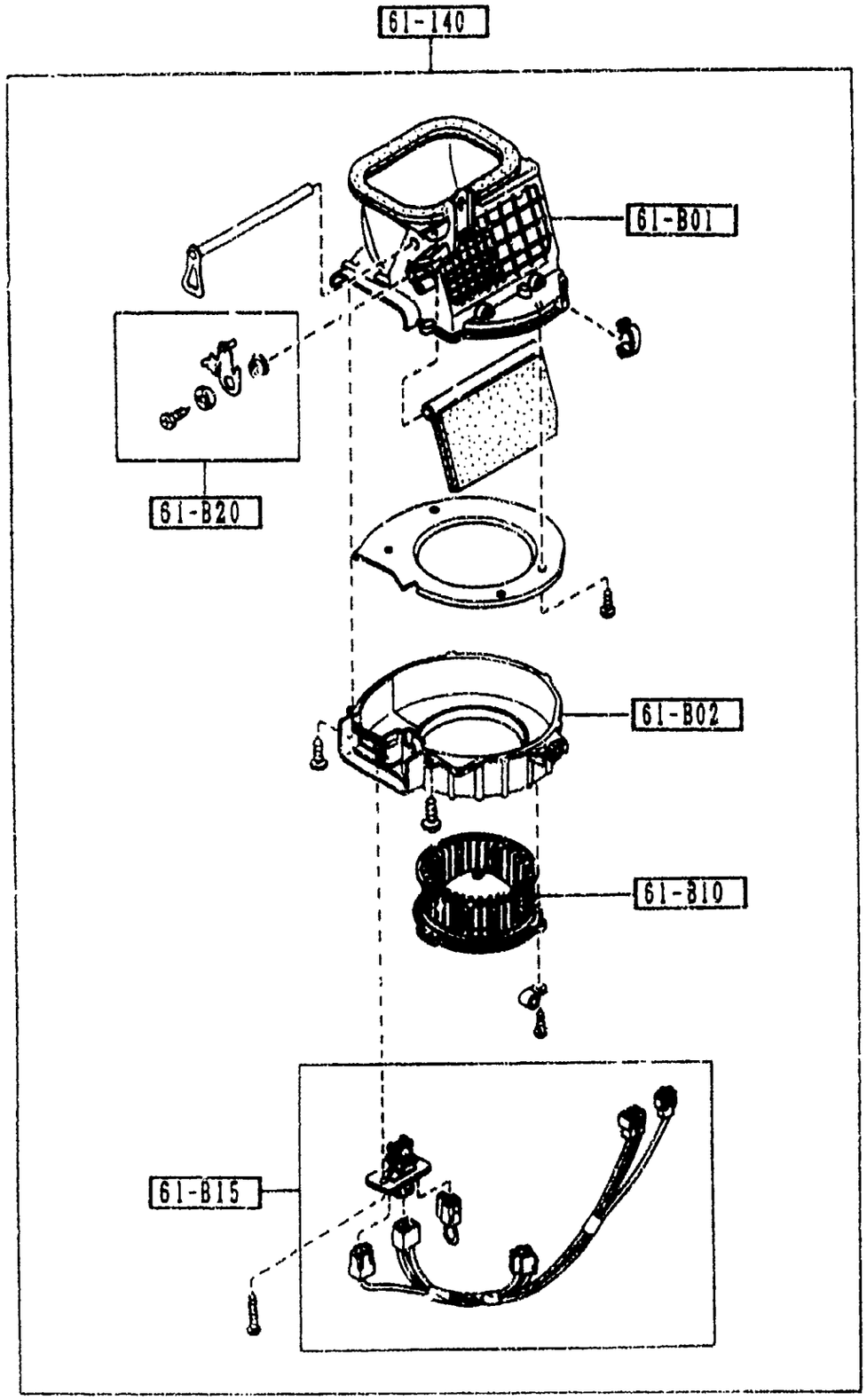

6120 -1 * HEATER BLOWER COMPONENTS

PART NO.	QTY	MODEL/RESTRICTION	MODEL/RESTRICTION	MODEL/RESTRICTION	FROM-TO
61-B01		CASE'A',BLOWER UNIT			
NA75-61-B01	1				
61-B02		CASE'B',BLOWER UNIT			
NA01-61-B02	1				
61-B10		MOTOR,FAN-BLOWER UNIT			
NA01-61-B10	1				
61-B15		RESISTOR,BLOWER UNIT			
NA01-61-B15	1				
61-B20		LINK,RECYCLE & FRESH			
NA01-61-B20	1				
61-140		BLOWER UNIT			
NA75-61-140	1				-7701
AN(NA75-61-140A)					
*NA75-61-140A	1				7701-

7701 NA35*V-738443

(PIPE & CONDENSER)

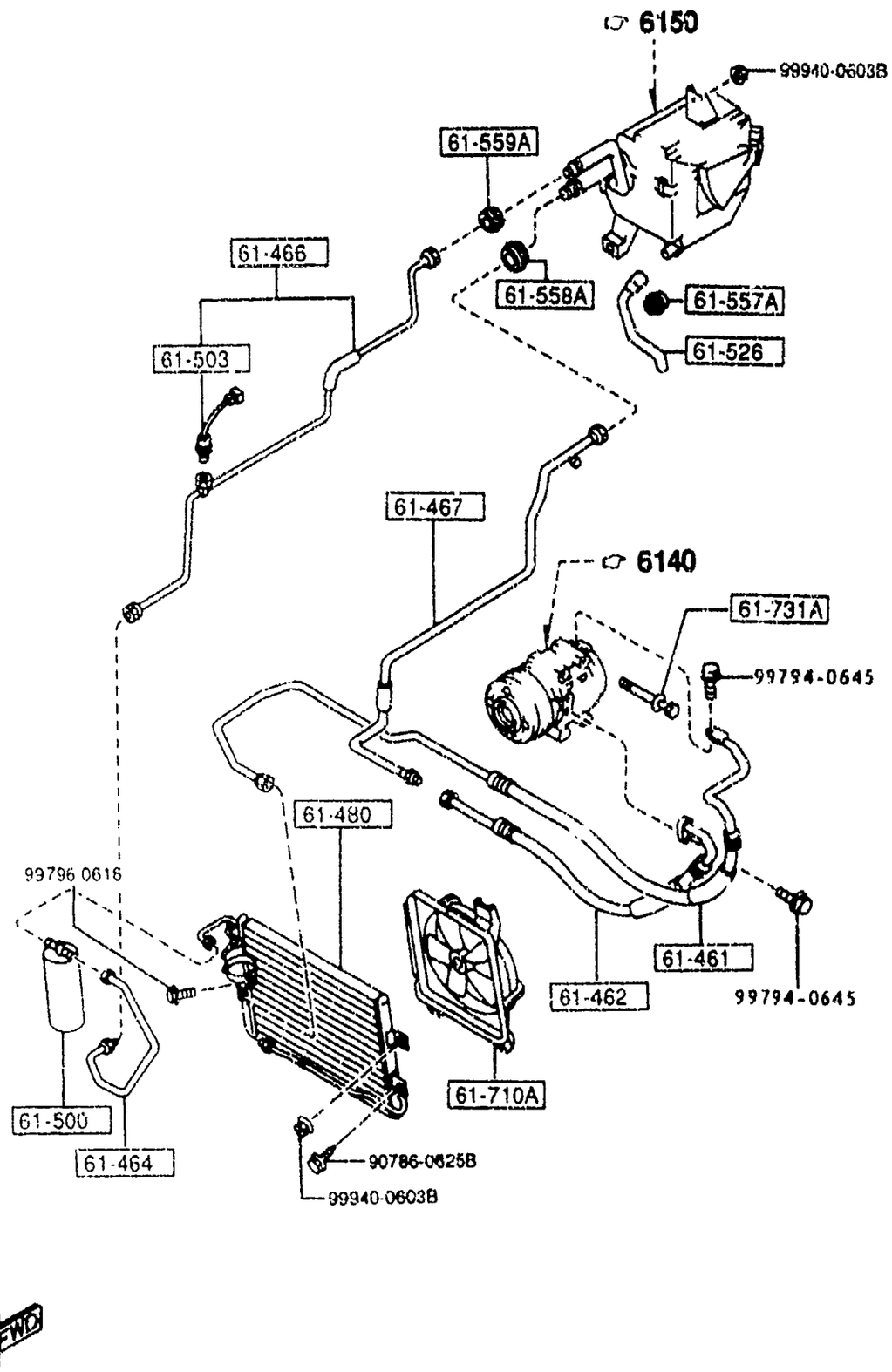

AUNA06

(BRACKET & CLIP)

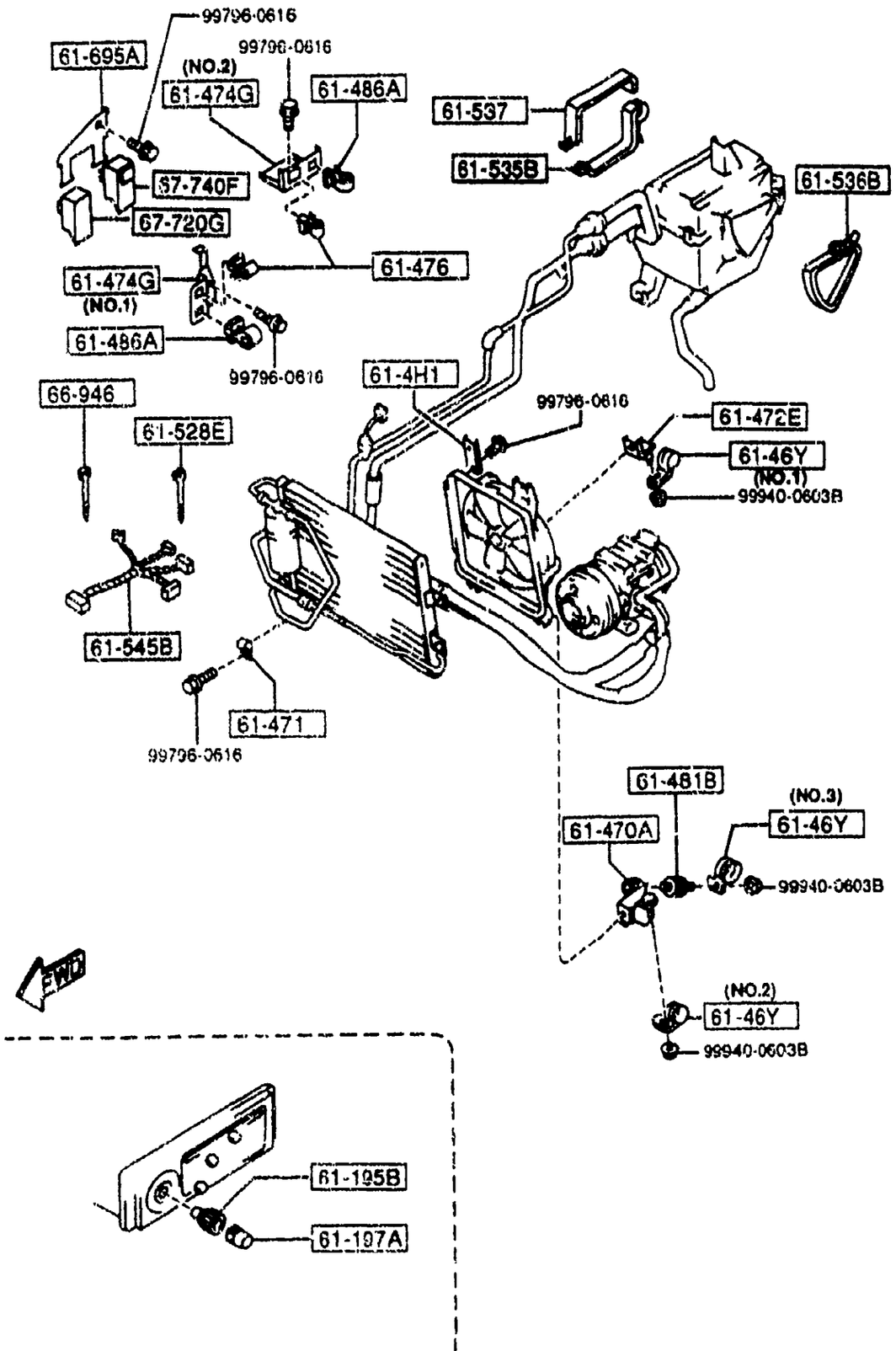

AUNA08

(PIPE & CONDENSER)

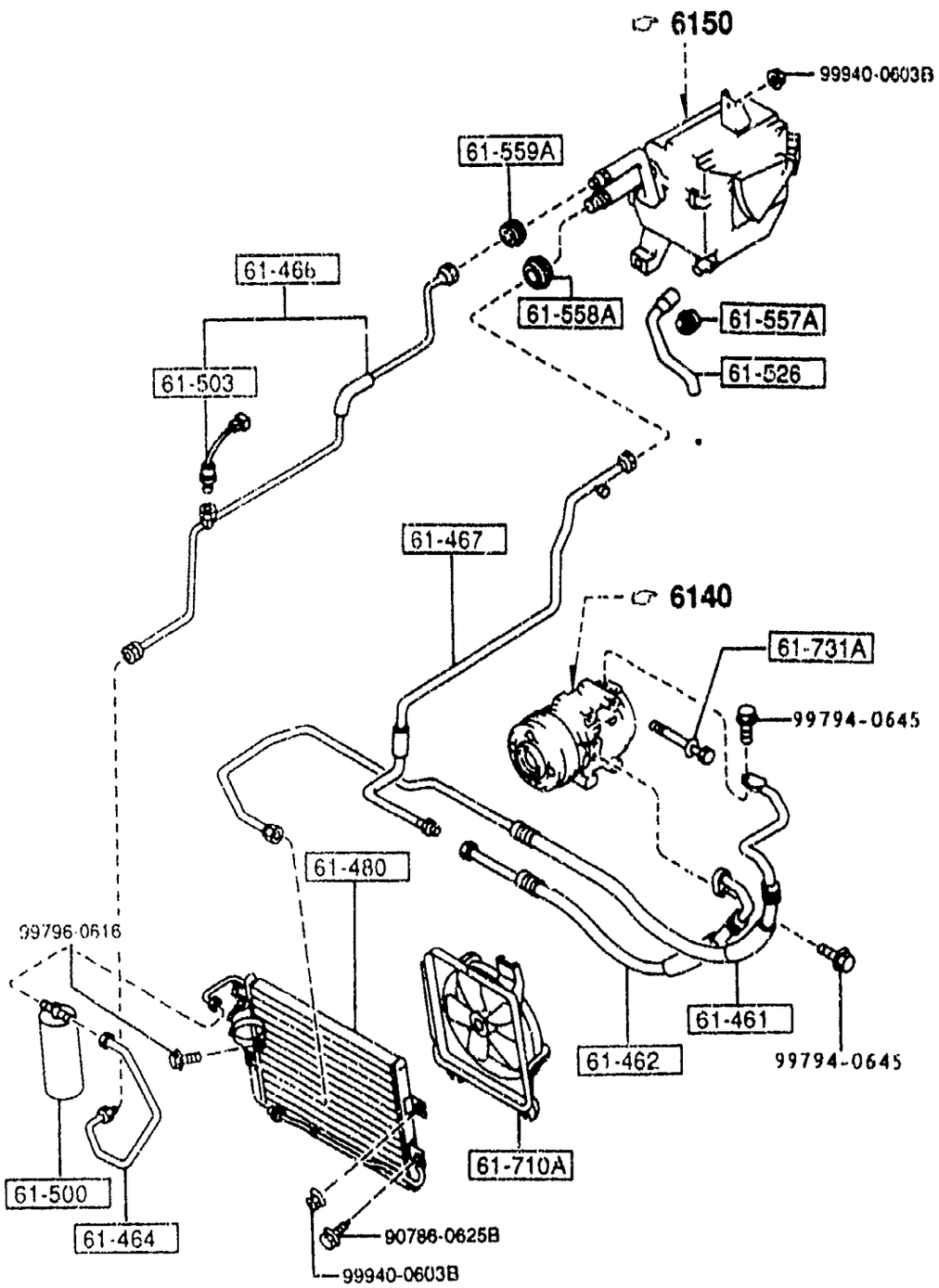

PART NO	QTY	MODEL/RESTRICTION	MODEL/RESTRICTION	MODEL/RESTRICTION	FROM-TO
61-195B NA01-61-193	1	KNOB,FAN SWITCH			
61-197A NA01-61-197	1	KNOB,AIR CON.			
61-4H1 HA01-61-4H1	1	BRACKET,HOSE (A)			
61-46Y BR71-61-46Y	1	CLIP,PIPE (A) (ILLUST. NO.1)			
BR76-61-46Y	1	(A) (ILLUST. NO.2)			
NA01-61-46YC	1	(A) (ILLUST. NO.3)			
61-461 NA75-61-461	1	HOSE,FLEXIBLE-HIGH (A)			
61-462 NA75-61-462	1	HOSE,FLEXIBLE-LOW (A)			
61-464 NA75-61-467	1	PIPE NO.2,COOLER (A)			
61-466 NA75-61-46XA	1	PIPE NO.4,COOLER (A)			
61-467 NA75-61-468	1	PIPE NO.5,COOLER (A)			
61-470A NA02-61-471A	1	BRACKET,HOSE (A)			
61-471 BF67-61-471	1	CLIP,PIPE (A)			

(BRACKET & CLIP)

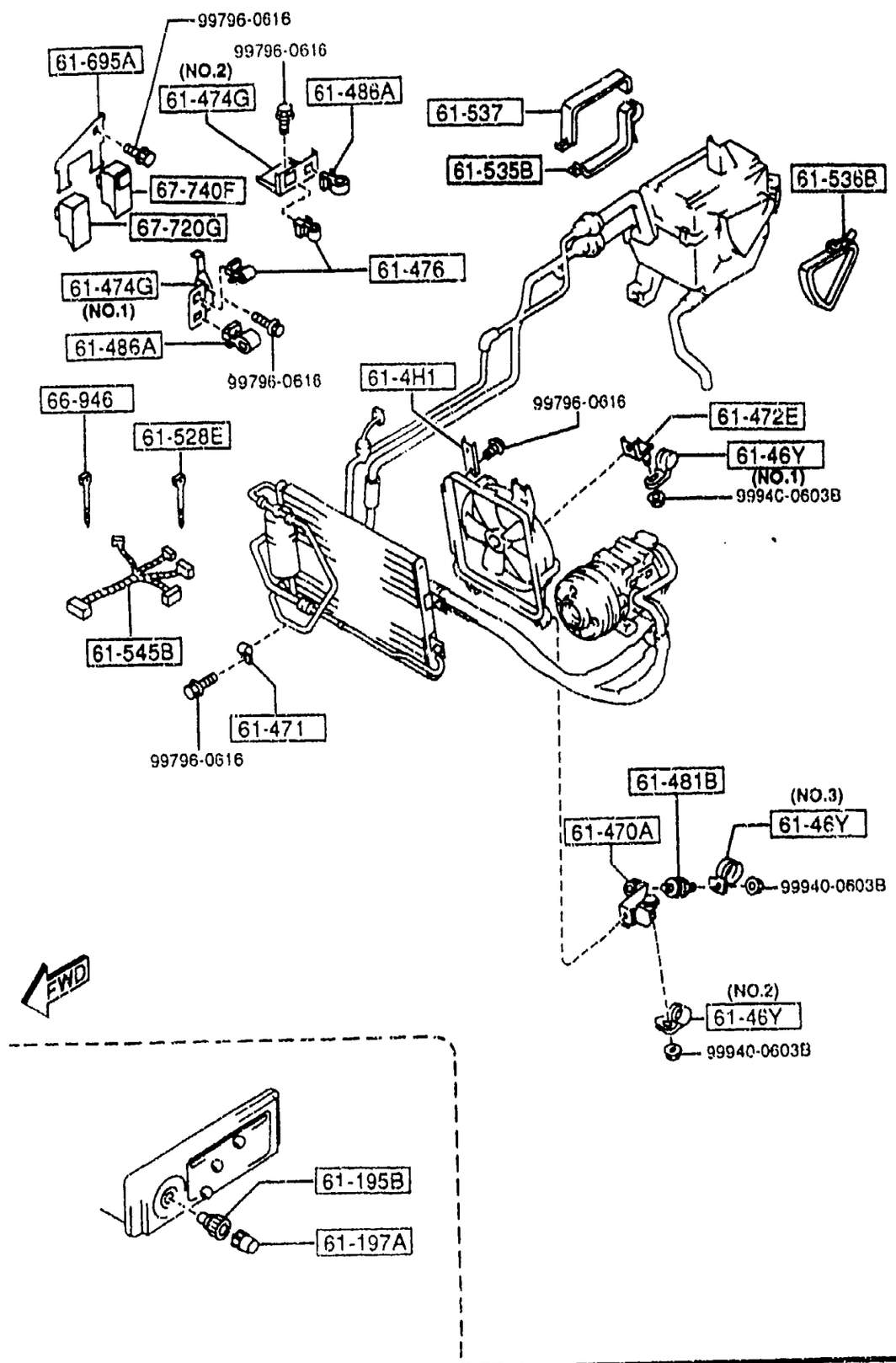

PART NO.	QTY	MODEL/RESTRICTION	MODEL/RESTRICTION	MODEL/RESTRICTION	FROM-TO
61-472E NA01-61-472	1	BRACKET,CLAMP (A)			
61-474G NA01-61-474	1	BRACKET,PIPE (A) (ILLUST. NO.1)			
NA02-61-474A	1	(A) (ILLUST. NO.2)			
61-476 NA02-61-476	2	CLIP (A)			
61-480 NA75-61-480	1	CONDENSER (A)			
61-481B FC20-61-481	1	RUBBER,INSULATOR (A)			
61-486A UB39-61-486A	2	CLIP			
61-500 NA75-61-500	1	TANK,LIQUID (A)			
61-503 GB6H-61-503	1	SW.,PRESSURE-LIQUID TANK (G)			
61-526 NA01-61-526 AN(NA01-61-526A)	1	HOSE,DRAIN (A)			-7722
*NA01-61-526A	1	(A)			7722-
61-528E NA01-61-435	1	BAND (G)			
61-535B NA01-61-52YA		PLATE NO.1,SEAL (A)			

7722 NA35*V-738852

(PIPE & CONDENSER)

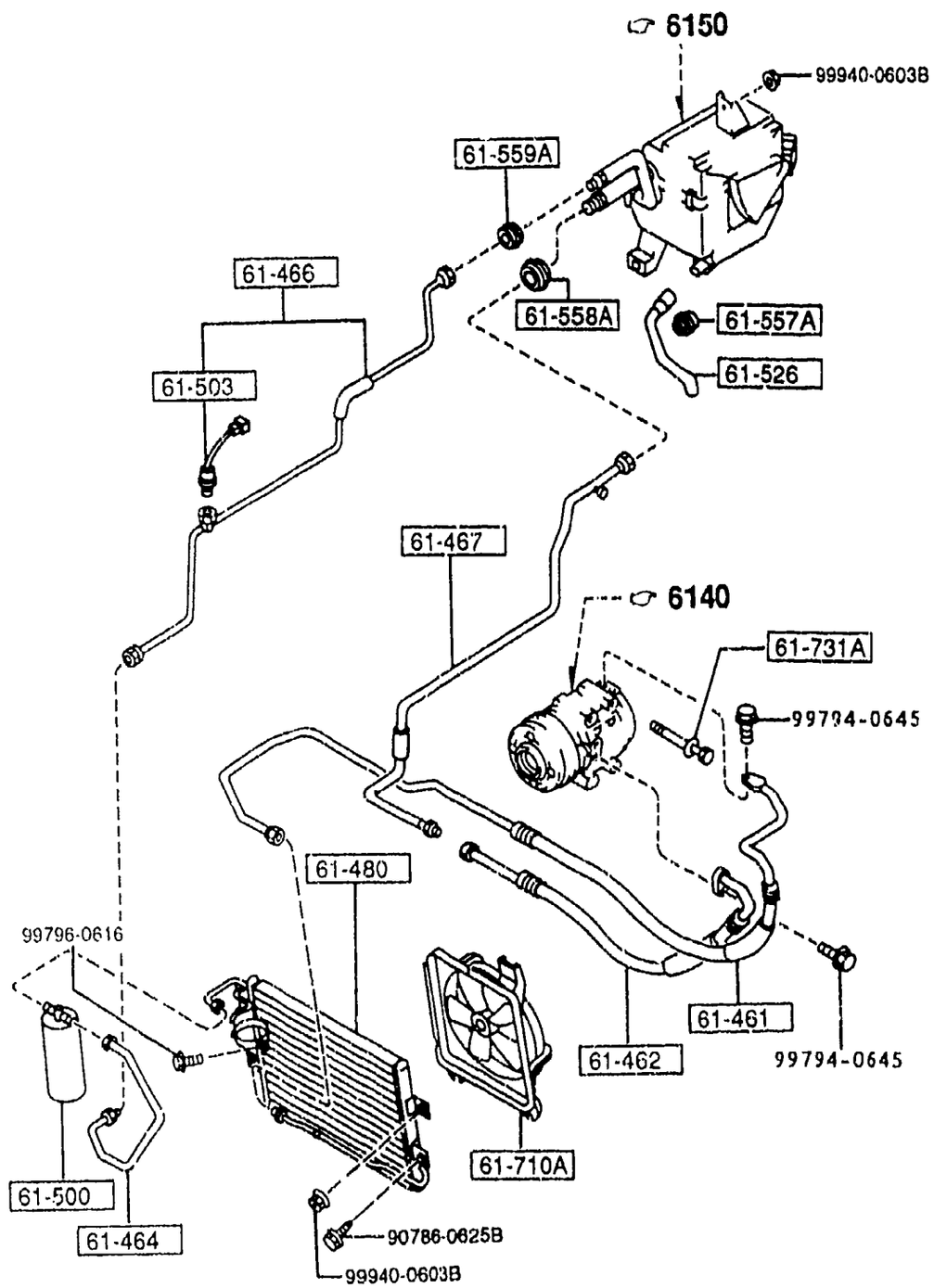

PART NO.	QTY	MODEL/RESTRICTION	MODEL/RESTRICTION	MODEL/RESTRICTION	FROM-TO
CONT'D	1				
61-536B NA01-61-52Z	1	PLATE NO.2,SEAL (A)			
61-537 NA01-61-529	1	PLATE NO.3,SEAL (A)			
61-545B NA75-61-545A	1	HARNESS,WIRE (A)			
61-557A FB04-61-557	1	GROMMET (A)			
61-558A BF67-61-558	1	GROMMET (A)			
61-559A BF67-61-559	1	GROMMET (A)			
61-695A NA75-61-695	1	BRACKET,RELAY (A)			
61-710A NA01-61-710	1	FAN,CONDENSER (A)			
61-731A B111-61-731	4	BOLT,AIR CON.			
66-946 NA02-61-435	1	BAND (A)			
67-720B EE12-67-720	1	RELAY,TRANSFER			

(BRACKET & CLIP)

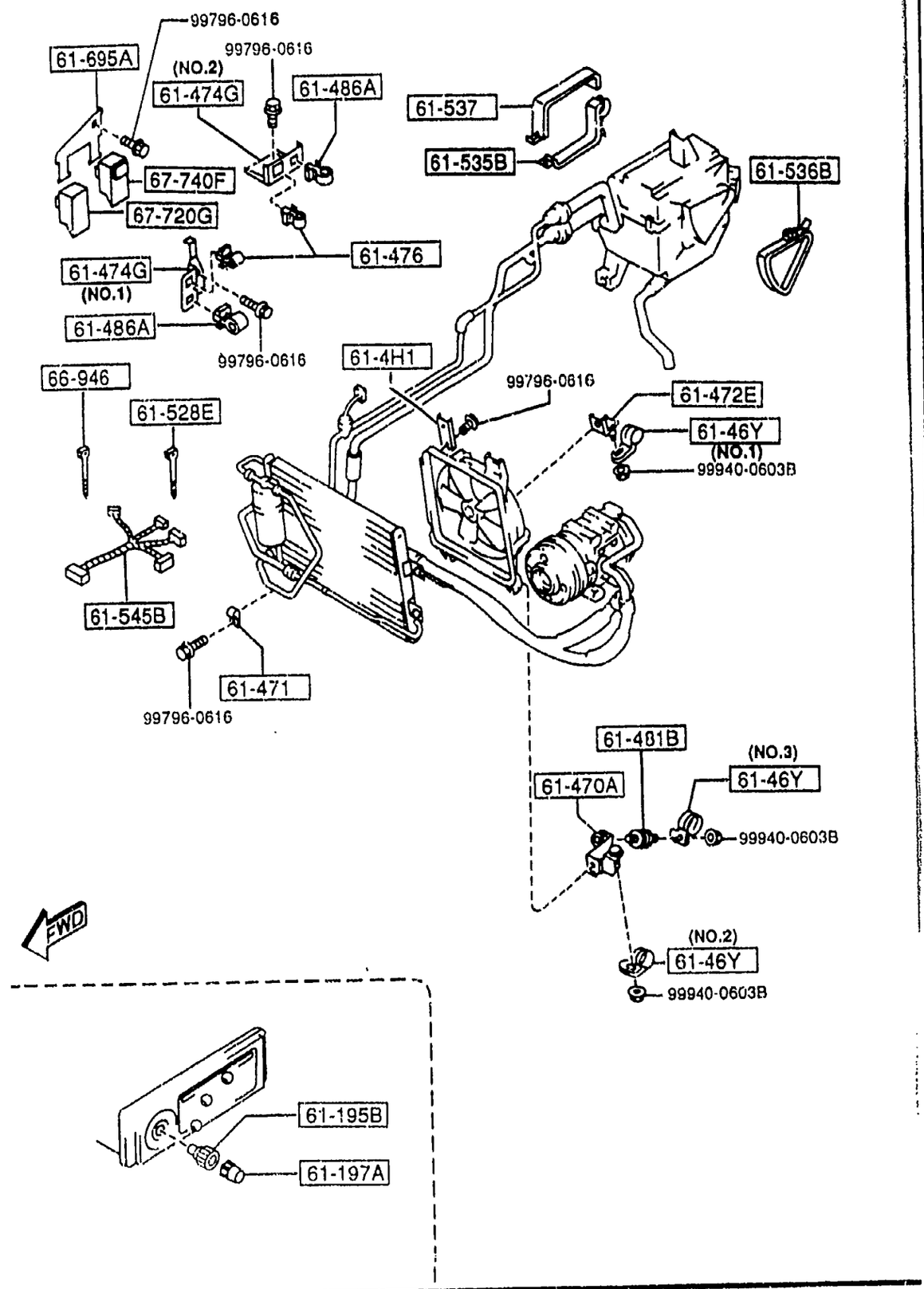

6130 -4 * AIR CONDITIONER

PART NO.	QTY	MODEL/RESTRICTION	MODEL/RESTRICTION	MODEL/RESTRICTION	FROM-TO
67-740F H450-67-740	1	CONTROL,COOLANT FAN 30A			

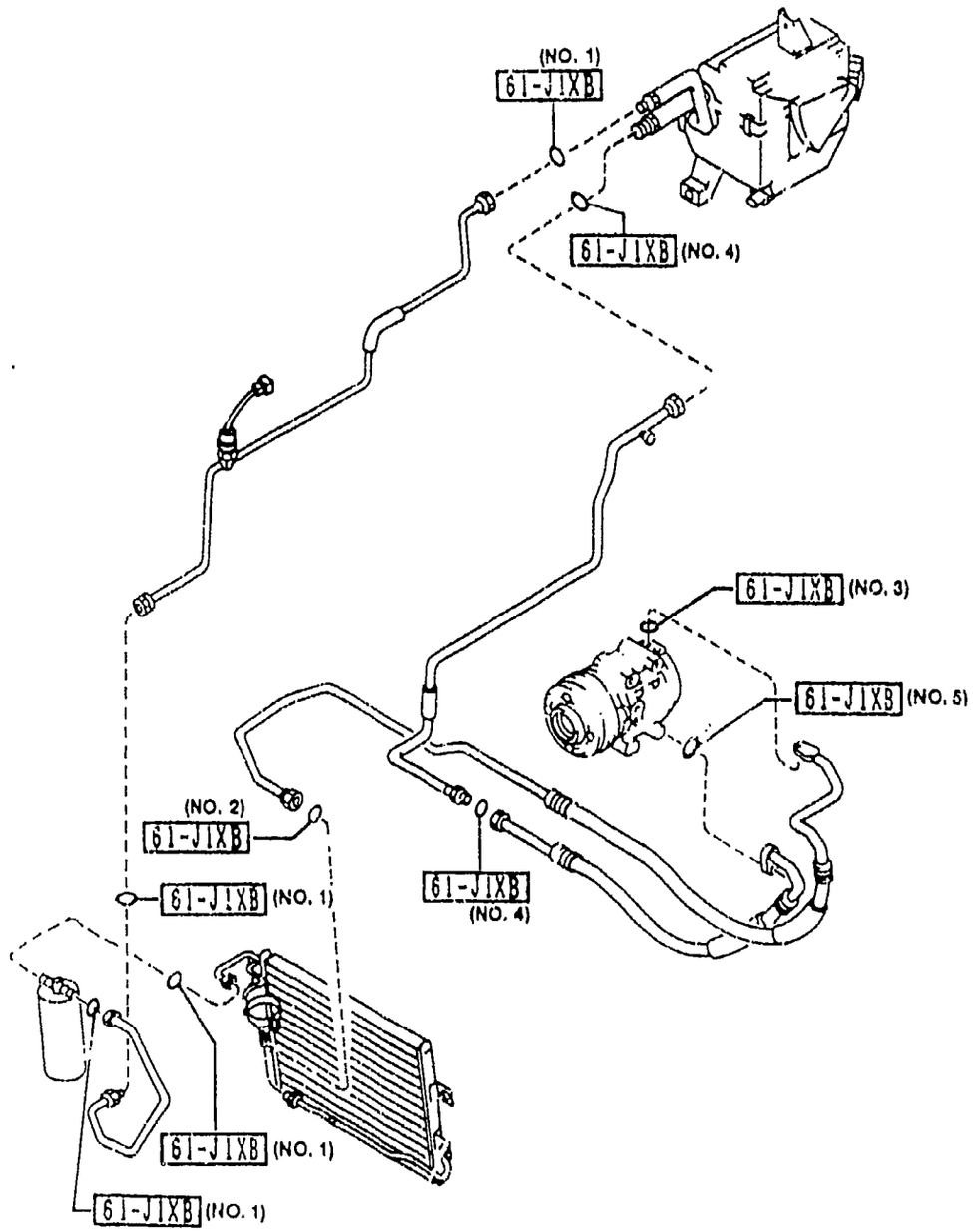

FWD

(Note)
The p/no (NO. 1) ~ (NO. 5) with D-code 61-J1XB consist 10 pcs of O Rings.

6135 -1 * AIR CONDITIONING COOLING PIPE O-RING

PART NO	QTY	MODEL/RESTRICTION	MODEL/RESTRICTION	MODEL/RESTRICTION	FROM-TO
+---------+ | 61-J1XB | +---------+		RING,'O'-NO.3			
LB51-61-J1X	1	(E) (ILLUST. NO.1)			
LB54-61-J1X	1	(E) (ILLUST. NO.2)			
LB55-61-J1X	1	(E) (ILLUST. NO.3)			
LB56-61-J1X	1	(E) (ILLUST. NO.4)			
LB57-61-J1X	1	(E) (ILLUST. NO.5)			

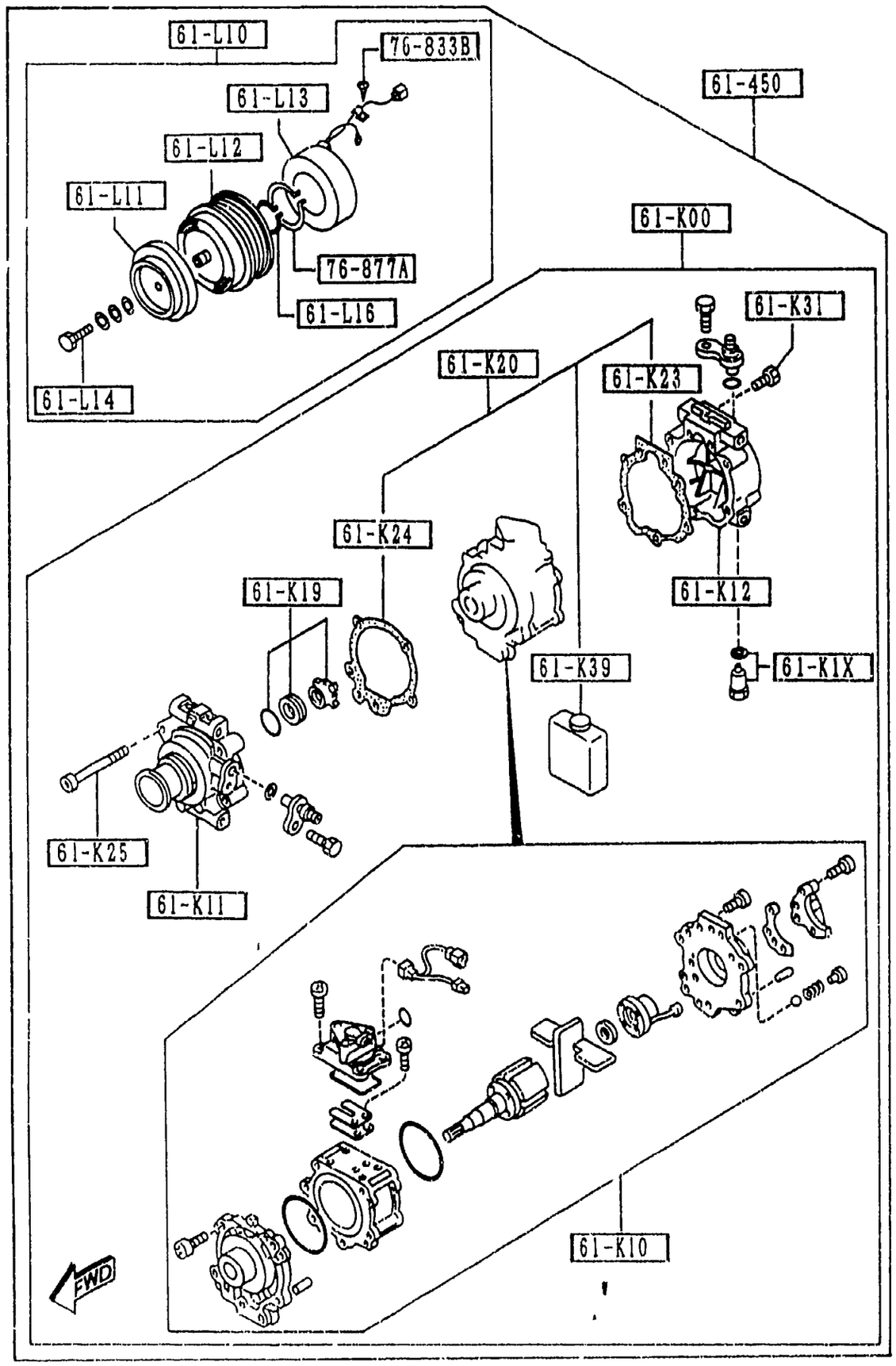

6140 -1 AIR CONDITIONING COMPRESSOR COMPONENTS

PART NO.	QTY	MODEL/RESTRICTION	MODEL/RESTRICTION	MODEL/RESTRICTION	FROM-TO
61-K00 NA75-61-K00	1	COMPRESSOR,AIR CON. (A)			
61-K1X NA75-61-K1X	1	VALVE,RELIEF (A)			
61-K10 NA75-61-K10	1	SHAFT,CYL.-COMPRESSOR (A)			
61-K11 NA75-61-K11	1	HEAD,CYL.-COMPRESSOR (A)			
61-K12 NA75-61-K12	1	HEAD,CYL.-COMPRESSOR (A)			
61-K19 NA75-61-K19	1	SEAL,SHAFT-COMPR. (A)			
61-K20 NA75-61-K2X	1	GASKET KIT,COMPRESSOR (A)			
61-K23 NA75-61-K23	1	PLUG,COMPRESSOR (A)			
61-K24 *NA02-61-K24	1	GASKET,COMPRESSOR (A)			
61-K25 F065-61-K25	5	BOLT,COMPRESSOR-AIR CON.			
61-K31 F065-61-K31	2	BOLT,COMPRESSOR			
61-K39 NA75-61-K39	1	OIL,COMPRESSOR (A)			

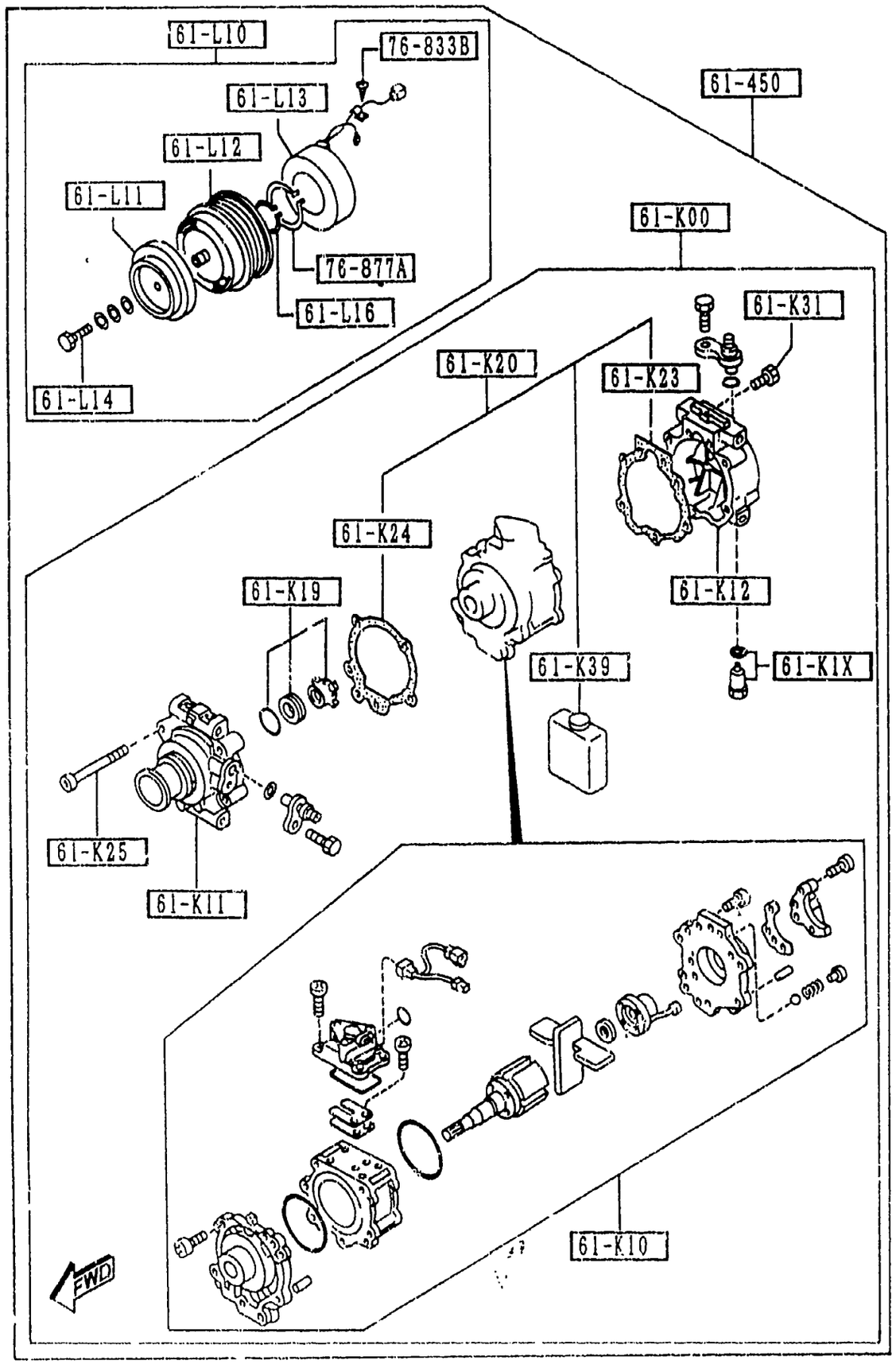

PART NO.	QTY	MODEL/RESTRICTION	MODEL/RESTRICTION	MODEL/RESTRICTION	FROM-TO
61-L10 NA75-61-L10	1	CLUTCH,MAGNET (A)			
61-L11 NA75-61-L11	1	ARMATURE,MAGNETIC CL UTCH (A)			
61-L12 NA75-61-L12	1	PULLEY,MAGNET CLUTCH (A)			
61-L13 NA75-61-L13	1	COIL,FIELD-MAGNET CL UTCH (A)			
61-L14 F065-61-L14	1	BOLT,MAGNET CLUTCH			
61-L16 F065-61-L16	1	RING,SNAP-MAGNET CLU TCH			
61-450 NA75-61-450	1	COMPRESSOR (A)			
76-833B B001-76-734	1	WASHER			
76-877A B001-76-725	1	RING,SNAP			

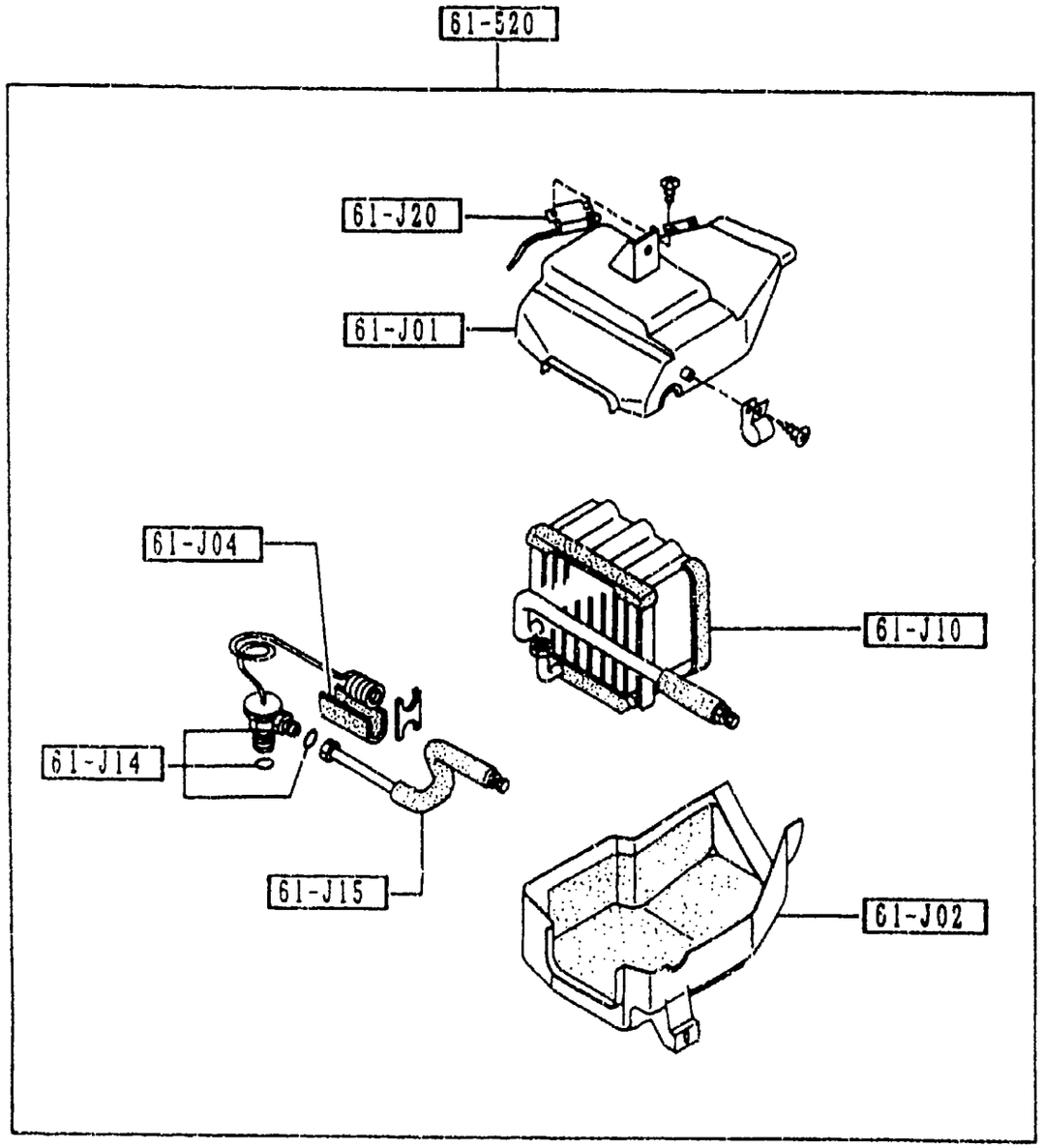

6150 -1 * AIR CONDITIONING COOLING UNIT

PART NO.	QTY	MODEL/RESTRICTION	MODEL/RESTRICTION	MODEL/RESTRICTION	FROM-TO
61-J01 NA01-61-J01A	1	CASE'A',COOLING UNIT (A)			
61-J02 NA01-61-J02A	1	CASE'B',COOLING UNIT (A)			
61-J04 NA01-61-J04	1	SEAL,COOLING UNIT (A)			
61-J10 NA01-61-J10A	1	EVAPORATOR (A)			
61-J14 NA75-61-J14	1	VALVE,EXPANSION (E)			
61-J15 NA01-61-J15	1	PIPE,COOLING UNIT (A)			
61-J20 NA01-61-J20	1	THERMOSTAT,COOLING U NIT (A)			
61-520 NA75-61-520B	1	UNIT,COOLING (A)			

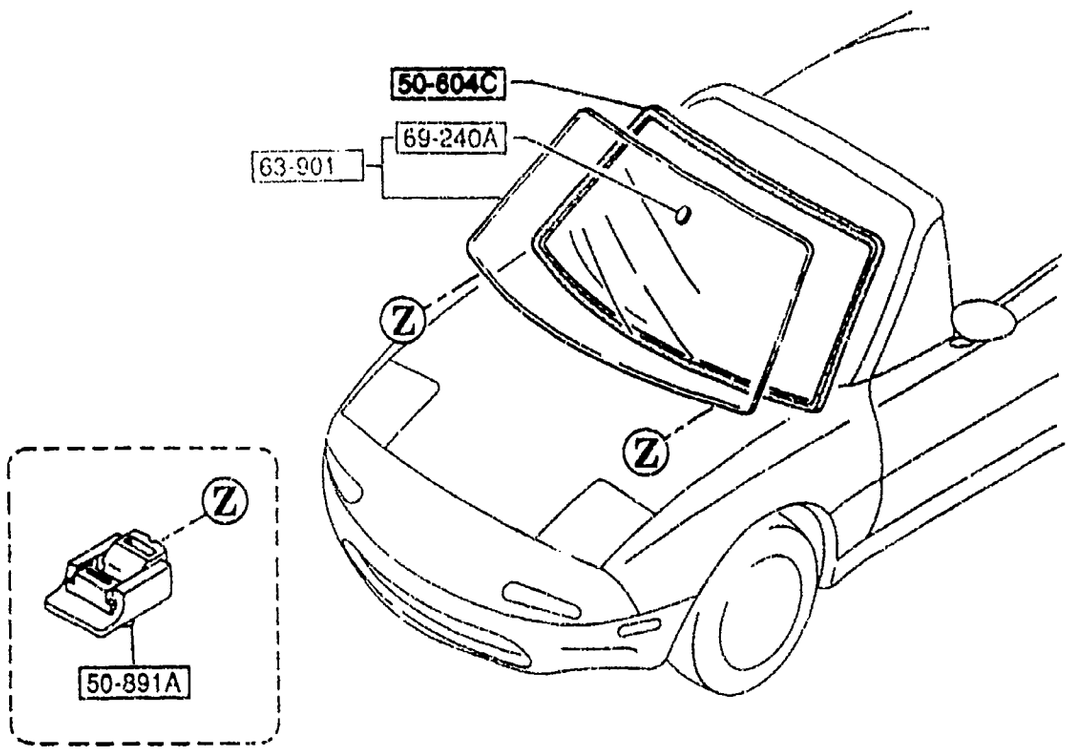

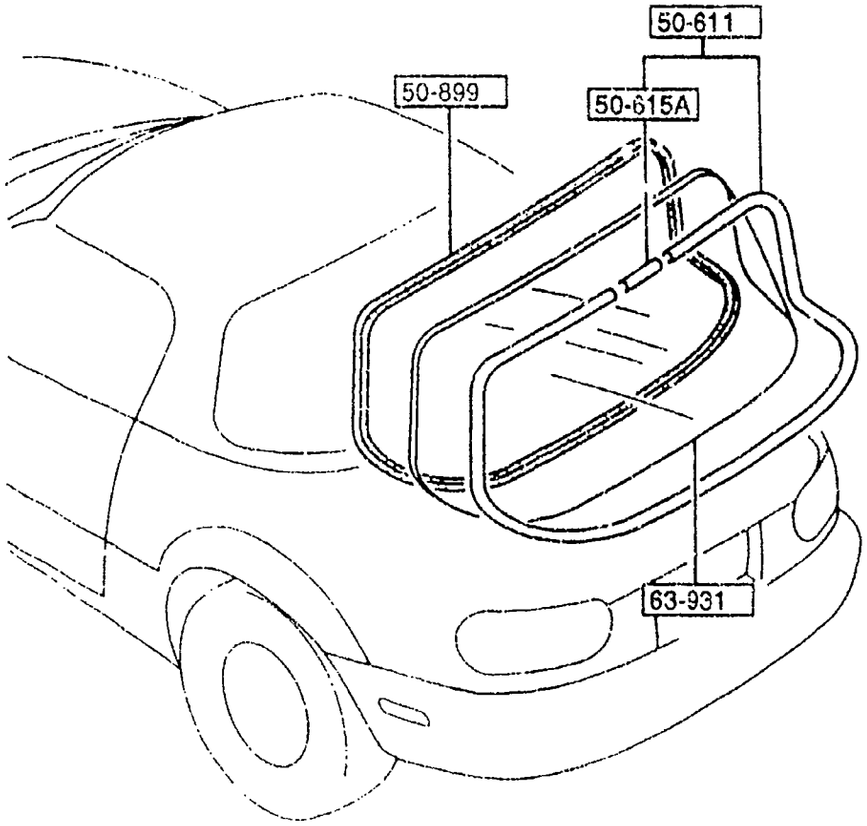

AUNA06

6300 -1 * WINDOW GLASSES

PART NO	QTY	MODEL/RESTRICTION	MODEL/RESTRICTION	MODEL/RESTRICTION	FROM-TO
50-604C		DAM			
NA01-50-894A	1				
50-611		MOULD,RR.WINDOW			
NAY1-63-930	1	(W/DETACHABLE HARD T OP)			
50-615A		JOINT,BACK WINDOW MO ULD			
NA01-63-934	1	(W/DETACHABLE HARD T OP)			
50-891A		SPACER,WINDOW			
EA01-50-891A	2	WHITE			-6901
E040-50-891	2	WHITE			6901-
50-899		DAM,REAR-WIND.			
NA01-63-895	1	(W/DETACHABLE HARD T OP)			
63-901		GLASS,WINDSHIELD			-6910
NB39-63-900 AN(NB39-63-900A)	1				
NB39-63-900A	1				6910-
63-931		GLASS,BACK WINDOW			
NB40-63-931	1	(W/DETACHABLE HARD T OP)			
69-240A		BASE,INTERIOR MIRROR			
BC1C-69-240	1				

6901 NA35*V-720297
6910 NA35*V-720303

CAT AUNA06-03

1998-07

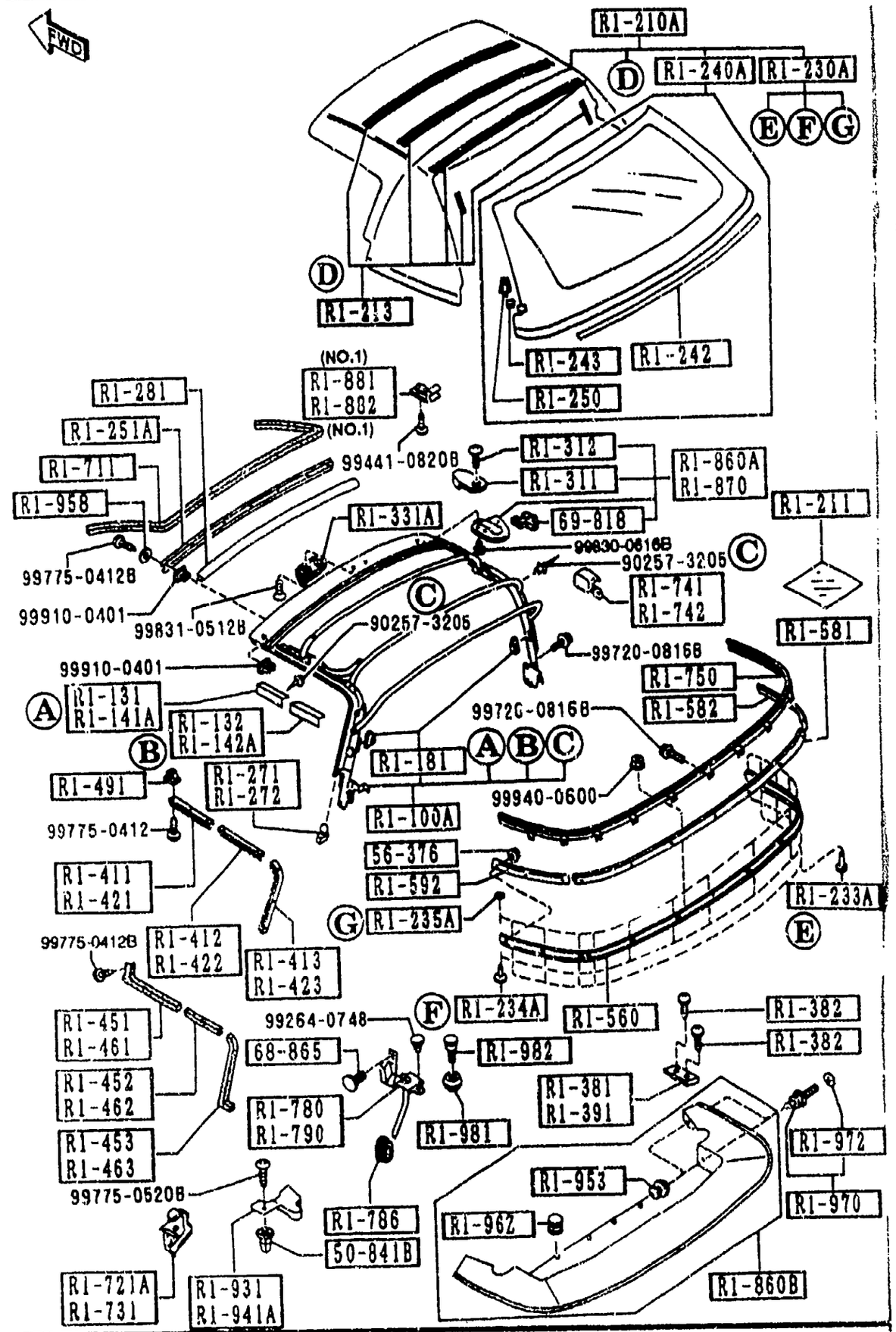

AUNA06

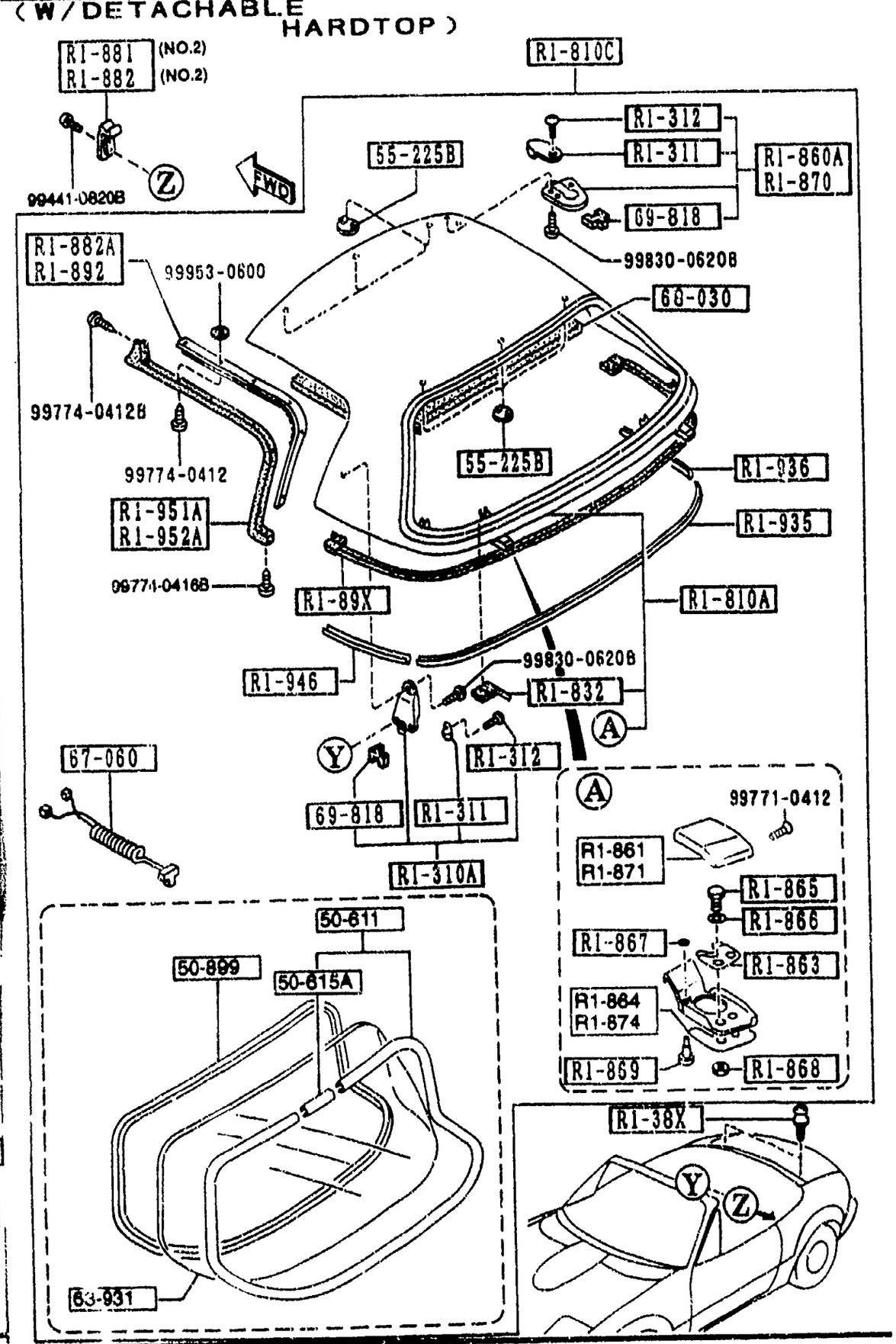

AUNA06

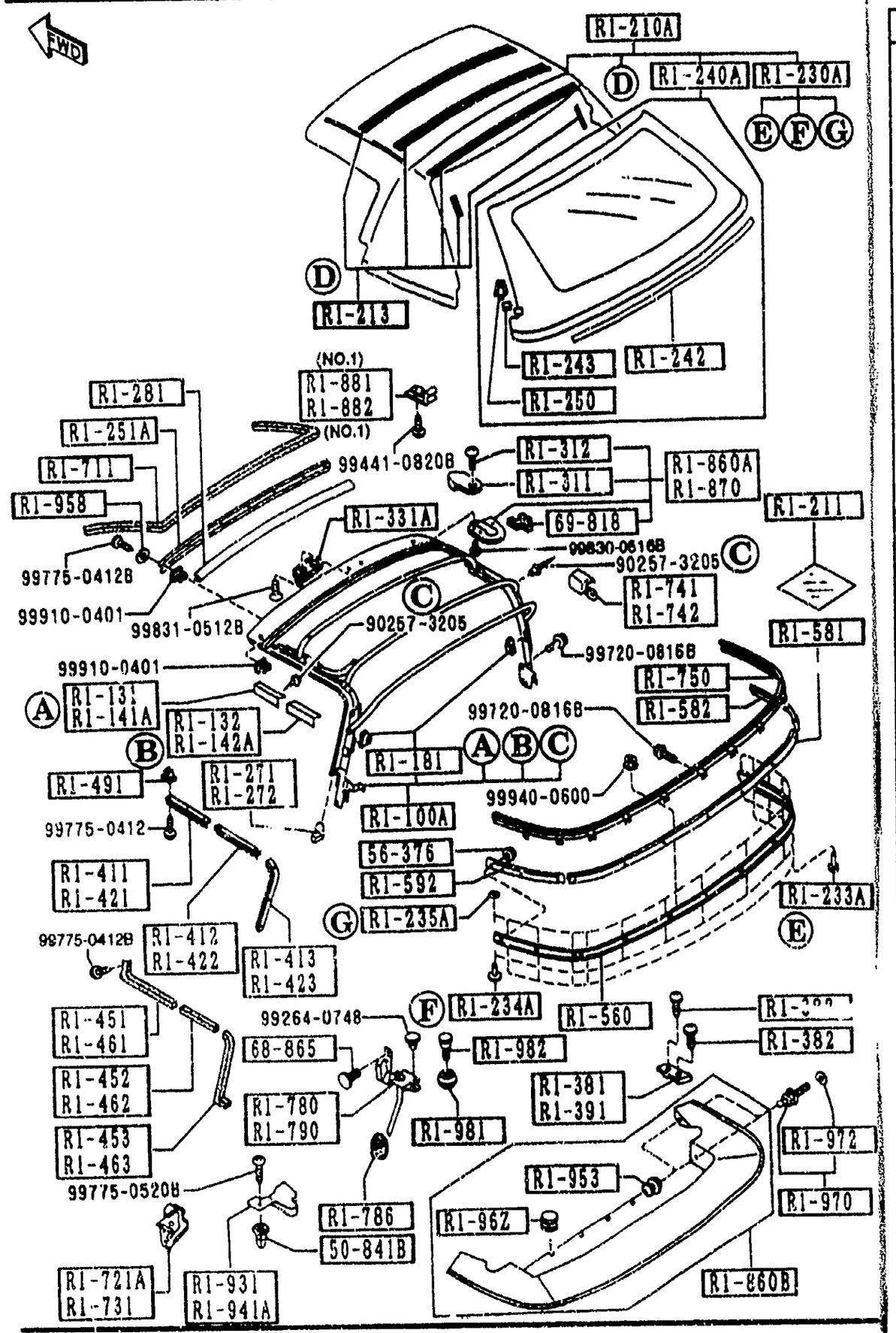

AUNA06

PART NO.	QTY	MODEL/RESTRICTION	MODEL/RESTRICTION	MODEL/RESTRICTION	FROM-TO
R1-100A		LINK,SOFT TOP			
NA01-R1-100E	1				
R1-131		PROTECTOR'A'(R),LINK			
NA01-R1-131	1				
R1-132		PROTECTOR'B'(R),LINK			
NA01-R1-132	1				
R1-141A		PROTECTOR'A'(L),LINK			
NA01-R1-141	1				
R1-142A		PROTECTOR'B'(L),LINK			
NA01-R1-142	1				
R1-181		STOPPER,LINK-HOOD			
NA01-R1-181	2				
R1-210A		FABRIC,TOP-SOFT TOP			
NA01-R1-210L	1	BASE, P.E.GR, R-PKG, T-PKG, (BLACK)			-6801
AN(NA01-R1-210M)					
NA02-R1-210E	1	F-SV, L-PKG, (TAN)			-6801
AN(NA02-R1-210F)					
NA01-R1-210M	1	BASE, P.E.GR, R-PKG, T-PKG, (BLACK)			6801-
NA02-R1-210F	1	F-SV, L-PKG, (TAN)			6801-
R1-211		CLOTH,REPAIR-TOP			
NAY1-R1-211	1	BASE, P.E.GR, R-PKG, T-PKG, (BLACK)			
NAY2-R1-211	1	F-SV, L-PKG, (TAN)			
R1-213		CLOTH'C',TOP			
NA02-R1-213	1	F-SV, L-PKG, (TAN)			
R1-230A		FASTENER SET,TOP CLOTH			
NA01-R1-230	1				

6801 NA35*V-719630

(W/DETACHABLE HARDTOP)

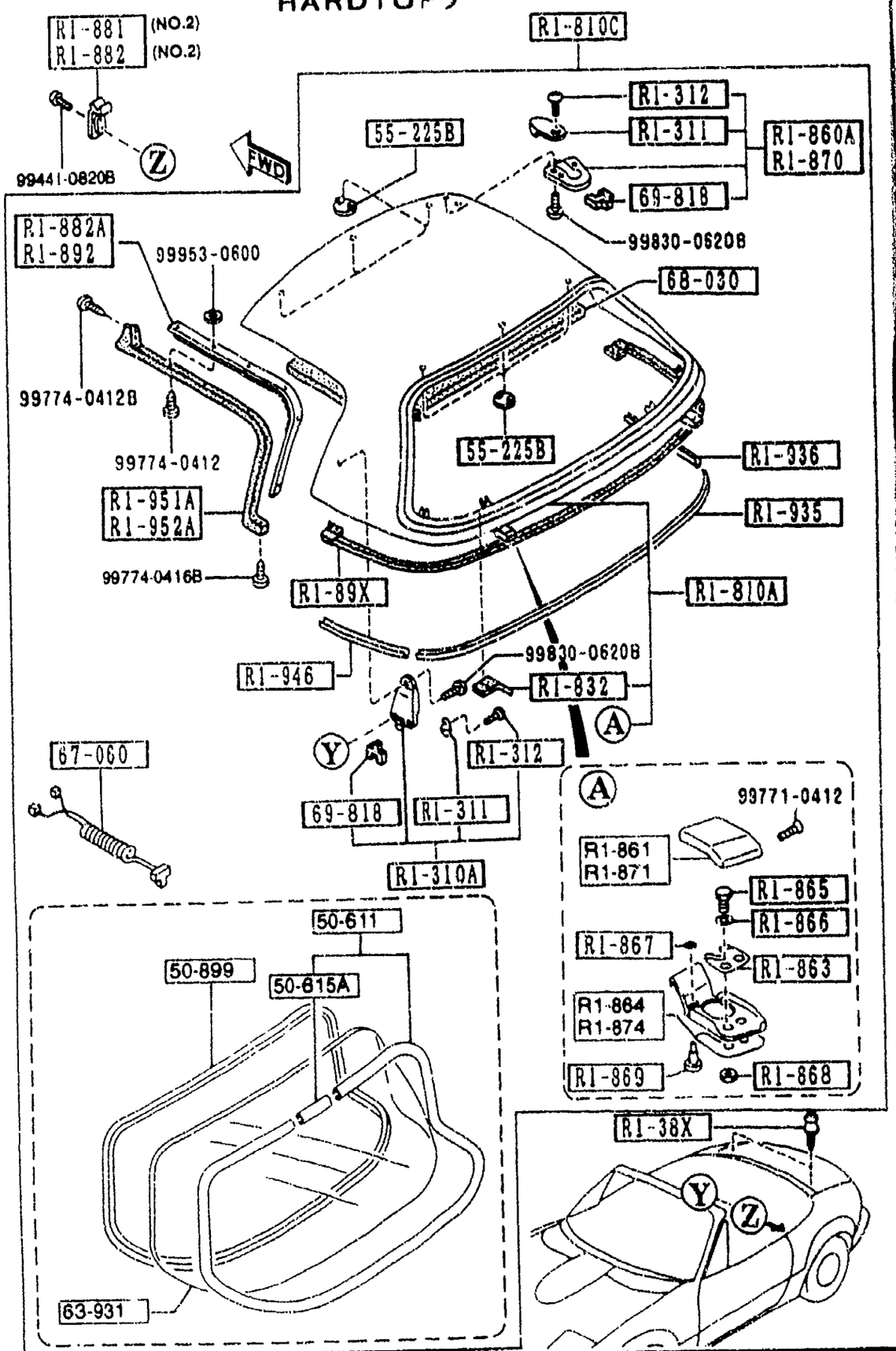

AUNA06

PART NO	QTY	MODEL/RESTRICTION	MODEL/RESTRICTION	MODEL/RESTRICTION	FROM TO
R1-233A NA01-R1-233	8	FASTENER,RAIN RAIL-SIDE			
R1-234A NA01-R1-234	7	FASTENER,RAIN RAIL-REAR			
R1-235A NA01-R1-235	15	WASHER,FASTENER-RAIN RAIL			
R1-240A		WINDOW,BACK-D. TOP			
NAY1-R1-240G	1	BASE, P.E.GR, R-PKG, T-PKG, (BLACK)			
NAY2-R1-240D	1	F-SV, L-PKG, (TAN)			
R1-242 NAY1-R1-242	1	TAPE,SEAL-RAIN RAIL			
R1-243 NAY1-R1-243	2	STOPPER,ZIPPER-BACK WINDOW			
R1-250 NA01-R1-250B	1	HEAD,ZIPPER-BACK WINDOW			
R1-251A NA01-R1-291	1	PLATE(FRT),SET-ROOF PANEL			
R1-271 NA01-R1-271	1	CLIP(R),FORM PLATE			
R1-272 NA01-R1-272	1	CLIP(L),FORM PLATE			
R1-281 NA01-R1-281	1	WELT,SEAMING-SOFT TOP			
R1-310A NA02-R1-310E	2	LOCK,DETACHABLE TOP (W/DETACHABLE HARD TOP)			
R1-311		CAP,TOP LOCK			

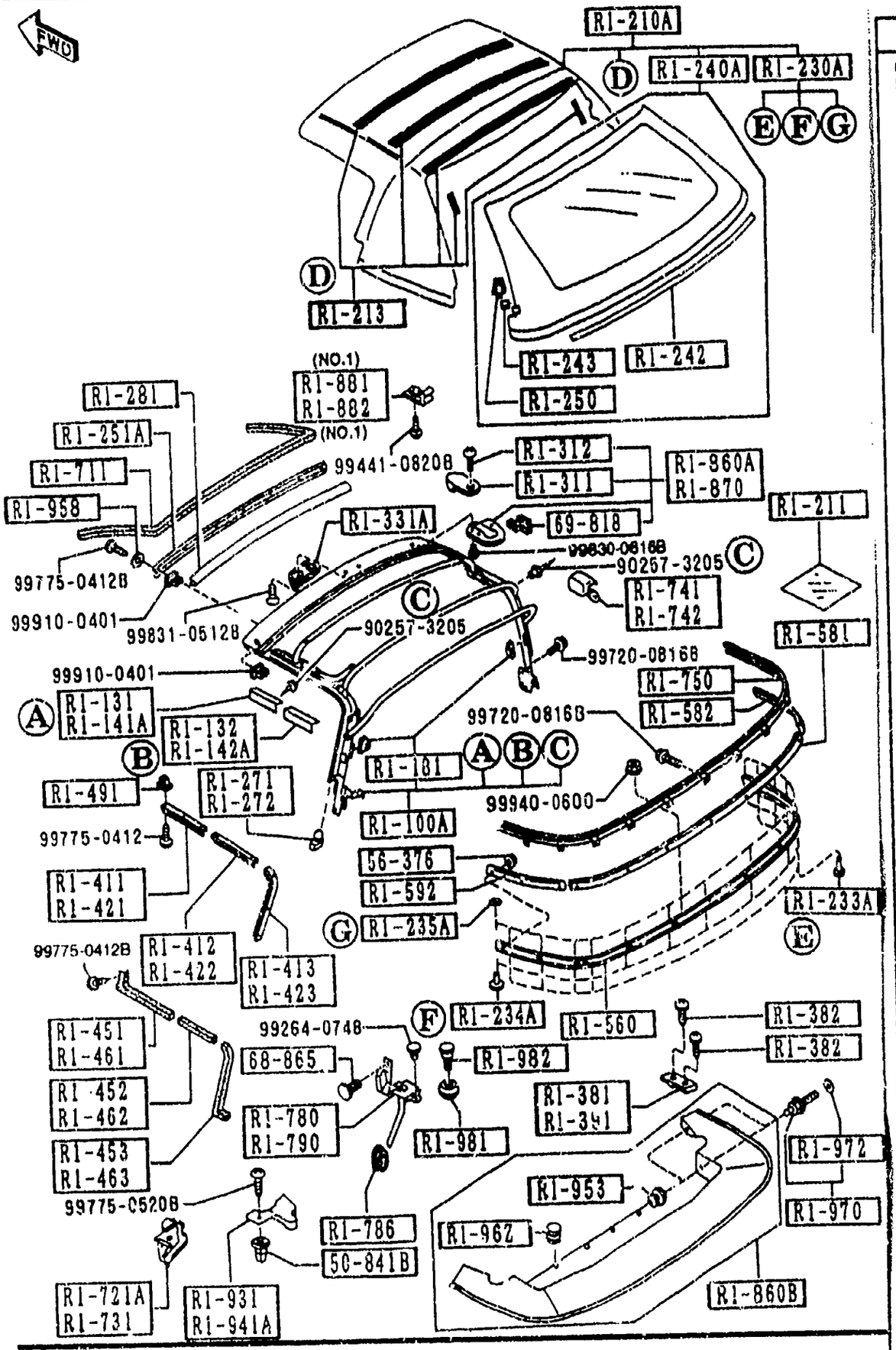

AUNA06

PART NO	QTY	MODEL/RESTRICTION	MODEL/RESTRICTION	MODEL/RESTRICTION	FROM-TO
CONT'D					
NA01-R1-311	2	(W/O DETACHABLE HARD TOP)			
NA01-R1-311	6	(W/DETACHABLE HARD TOP)			
R1-312		SCREW,TOP LOCK			
NA01-R1-312	2	(W/O DETACHABLE HARD TOP)			
NA01-R1-312	6	(W/DETACHABLE HARD TOP)			
R1-331A		HANDLE,SOFT TOP			
NA01-R1-331	1				
R1-38X		HOOK,SOFT TOP-REAR DECK			
NA01-R1-38XB	2				
R1-381		PLATE(R),HOOK-REAR DECK			
NA01-R1-381B	1				
R1-382		SCREW,HOOK-REAR DECK			
NA01-R1-382A	2				
R1-391		PLATE(L),HOOK-REAR DECK			
NA01-R1-391B	1				
R1-411		RETAINER'A'(R),WTHSTP			
NA01-R1-461	1				
R1-412		RETAINER'B'(R),WTHSTP			
NA01-R1-462	1				
R1-413		RETAINER'C'(R),WTHSTP			
NA01-R1-463	1				
R1-421		RETAINER'A'(L),WTHSTP			
NA01-R1-471	1				
R1-422		RETAINER'B'(L),WTHSTP			
NA01-R1-472	1				
R1-423		RETAINER'C'(L),WTHSTP			

(W/DETACHABLE HARDTOP)

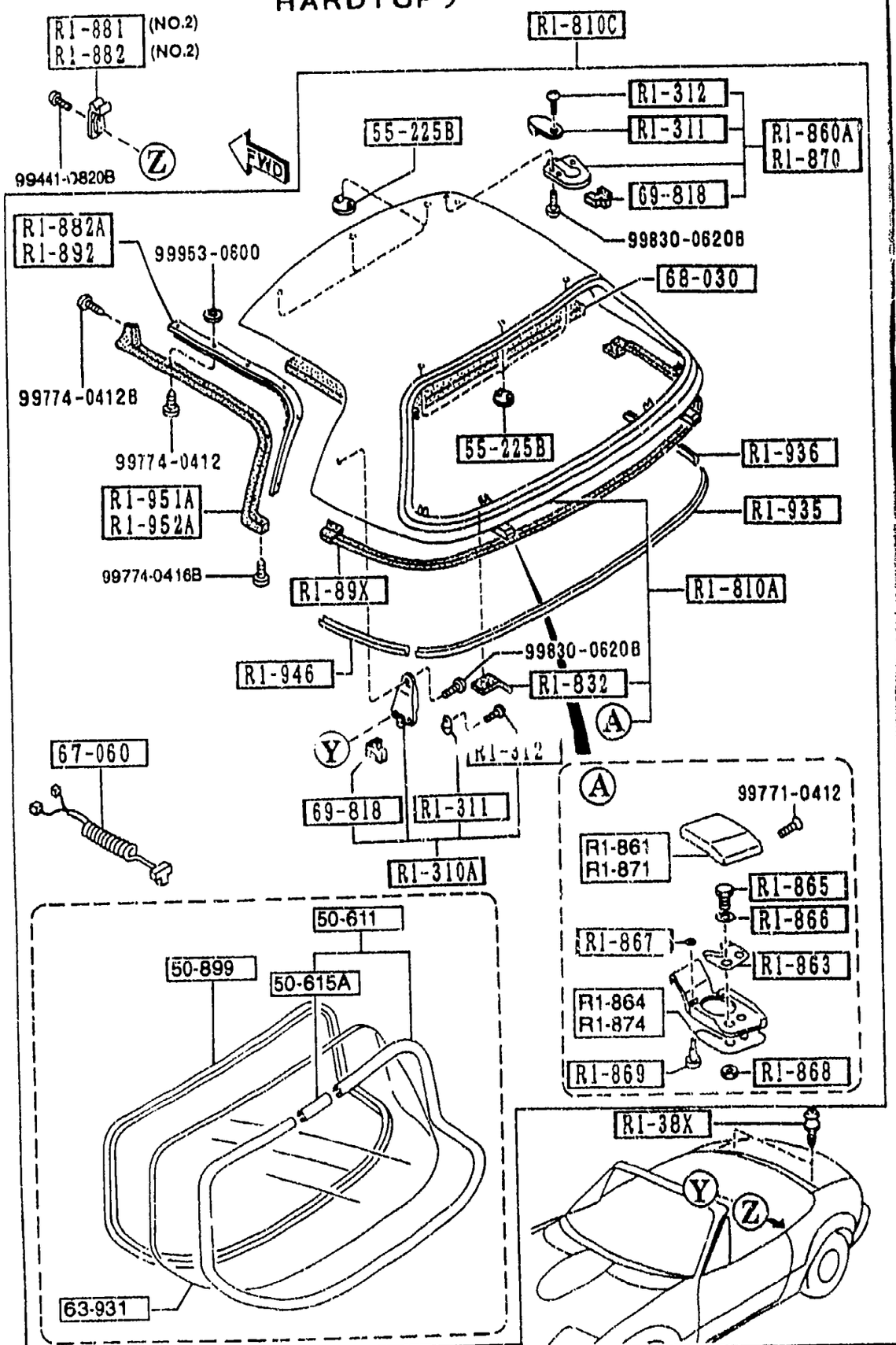

AUNA06

PART NO.	QTY	MODEL/RESTRICTION	MODEL/RESTRICTION	MODEL/RESTRICTION	FROM-TO
CONT'D					
NA01-R1-473	1				
R1-451		WTHSTP NO.1(R),LINK			
NA01-R1-411B	1				-6909
AN(NA01-R1-411C)					
NA01-R1-411C	1				6909-
R1-452		WTHSTP NO.2(R),LINK			
NA01-R1-412B	1				-6909
AN(NA01-R1-412C)					
NA01-R1-412C	1				6909-
R1-453		WTHSTP NO.3(R),LINK			
NA01-R1-413B	1				-6819
AN(NA01-R1-413C)					
NA01-R1-413C	1				6819-
R1-461		WTHSTP NO.1(L),LINK			
NA01-R1-421B	1				-6909
AN(NA01-R1-421C)					
NA01-R1-421C	1				6909-
R1-462		WTHSTP NO.2(L),LINK			
NA01-R1-422B	1				-6909
AN(NA01-R1-422C)					
NA01-R1-422C	1				6909-
R1-463		WTHSTP NO.3(L),LINK			
NA01-R1-423B	1				-6819
AN(NA01-R1-423C)					
NA01-R1-423C	1				6819-
R1-491		GROMMET,SCREW-RETAIN ER			
NA01-R1-491	16				
R1-560		RAIL,RAIN-SOFT TOP R EAR			
NA01-R1-560C	1				
R1-581		PLATE(C),SET-TOP FAB RIC			
NA01-R1-581B	1				-6901
NA01-R1-581C	1				6901-

6819 NA35*V-719802
6901 NA35*V-720297
6909 NA35*V-720301

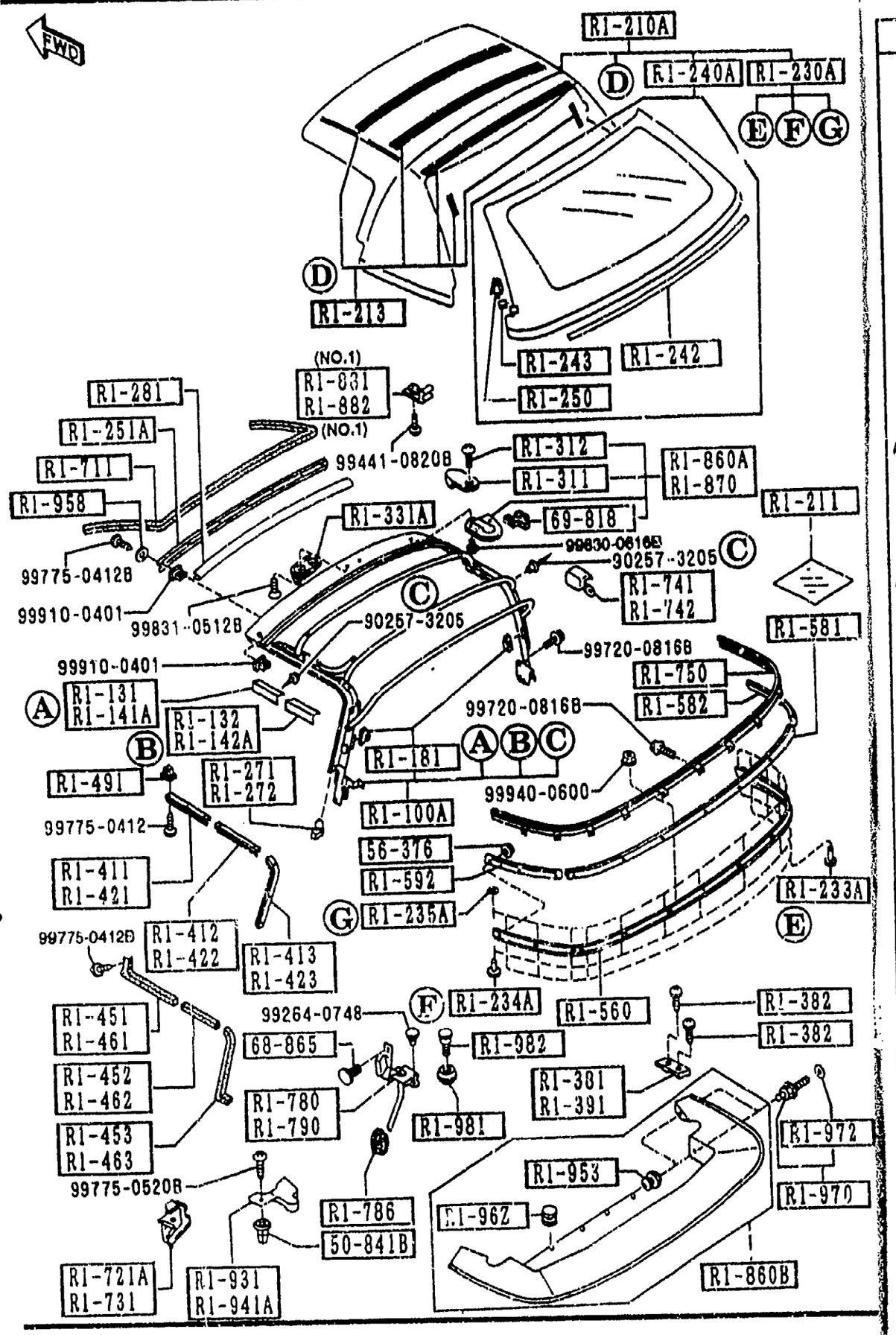

AUNA06

PART NO.	QTY	MODEL/RESTRICTION	MODEL/RESTRICTION	MODEL/RESTRICTION	FROM-TO
R1-582		PLATE(R),SET-TOP FAB RIC			
NA01-R1-582A	1				-6901
NA01-R1-582B	1				6901-
R1-592		PLATE(L),SET-TOP FAB RIC			
NA01-R1-592A	1				-6901
NA01-R1-592B	1				6901-
R1-711		WTHSTP,FRONT HEADER			
NA01-R1-711B	1				
R1-721A		WTHSTP(R),CAB SIDE			
NA01-R1-721B AN(NA01-R1-721C)	1				-6A01
NA01-R1-721C	1				6A01-
R1-731		WTHSTP(L),CAB SIDE			
NA01-R1-731B AN(NA01-R1-731C)	1				-6A01
NA01-R1-731C	1				6A01-
R1-741		PROTR(R),MOULD-BELT LINE			
NA01-R1-741B	1				
R1-742		PROTR(L),MOULD-BELT LINE			
NA01-R1-742C	1				
R1-750		MOULD,BELTLINE-REAR			
NA01-R1-750E	1				
R1-780		COVER(R),DRAIN-SOFT TOP			
NA01-R1-780C A (NA01-R1-780D)	1				-7717
*NA01-R1-780D	1				7717-
R1-786		GROMMET,DRAIN HOSE-TOP			
NA01-R1-786A	2				
R1-790		COVER(L),DRAIN-SOFT TOP			
NA01-R1-790C A (NA01-R1-790D)	1				-7717

6901 NA35*V-720297
6A01 NA35*V-720311
7717 NA35*V-738778

(W/DETACHABLE HARDTOP)

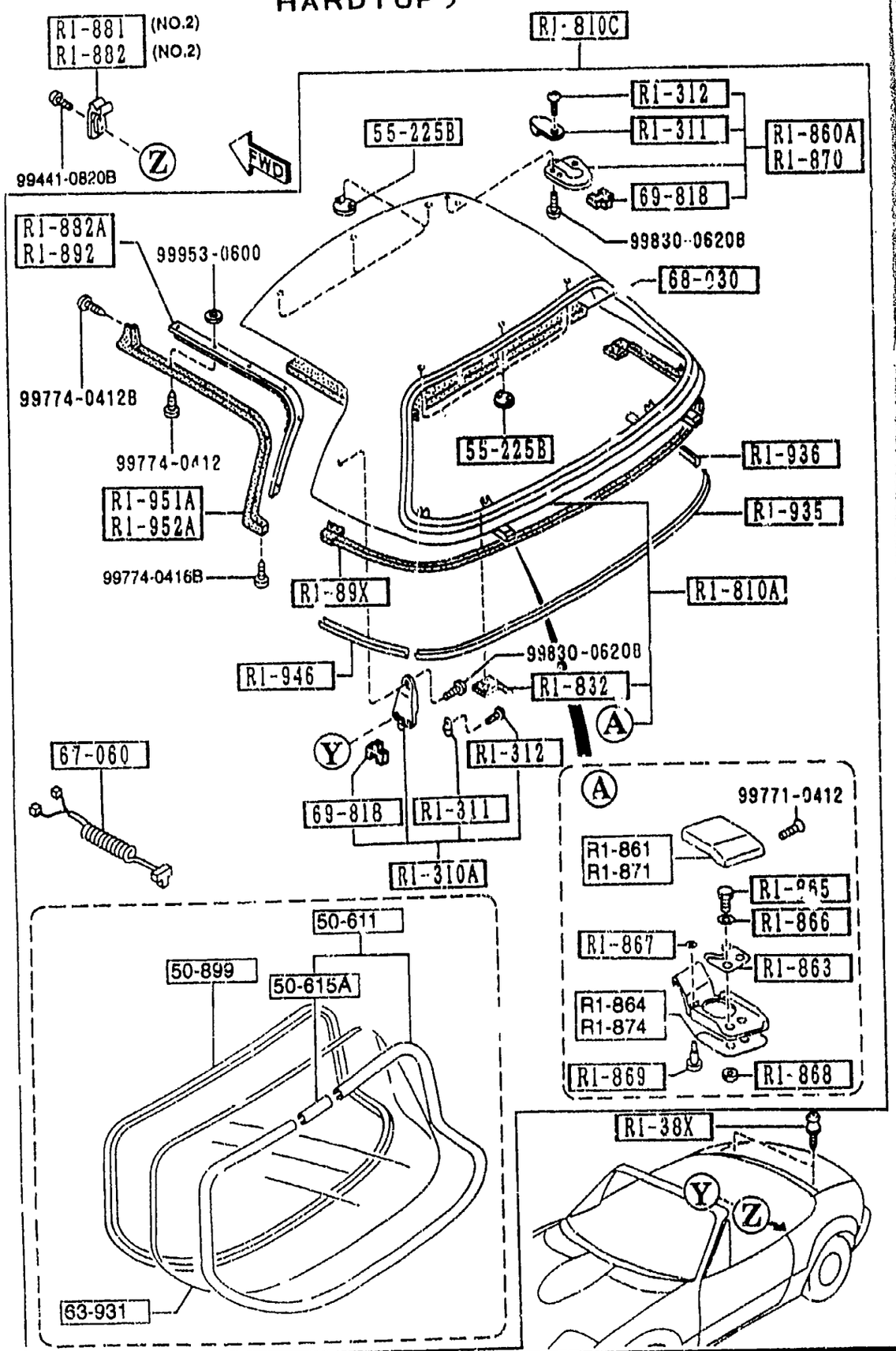

AUNA06

PART NO.	QTY	MODEL/RESTRICTION	MODEL/RESTRICTION	MODEL/RESTRICTION	FROM-TO
CONT'D					
*NA01-R1-790D	1				7717-
R1-810A		PANEL,ROOF			
NA06-R1-82X	1	(W/DETACHABLE HARD TOP)			-6C10
A5	EXT-	A5 SATELLITE BLUE MC			
HU	EXT-	HU NEO GREEN			
M8	EXT-	M8 MONTEGO BLUE M			
PT	EXT-	PT CHAST WHITE			
PZ	EXT-	PZ BRILLIANT BLACK			
SU	EXT-	SU CLASSIC RED			
NA06-R1-82XB	1	(W/DETACHABLE HARD TOP)			6C10-
A5	EXT-	A5 SATELLITE BLUE MC			
HU	EXT-	HU NEO GREEN			
* M8	EXT-	M8 MONTEGO BLUE M			
PT	EXT-	PT CHAST WHITE			
PZ	EXT-	PZ BRILLIANT BLACK			
SU	EXT-	SU CLASSIC RED			
23	EXT-	13C MARINA GREEN MC			
57	EXT-	12K TWILIGHT BLUE			
R1-810C		ROOF,DETACHABLE TOP			
NB40-R1-810	1	(W/DETACHABLE HARD TOP)			-6C10
A5	EXT-	A5 SATELLITE BLUE MC			
HU	EXT-	HU NEO GREEN			
M8	EXT-	M8 MONTEGO BLUE M			
PT	EXT-	PT CHAST WHITE			
PZ	EXT-	PZ BRILLIANT BLACK			
SU	EXT-	SU CLASSIC RED			
NB40-R1-810B	1	(W/DETACHABLE HARD TOP)			6C10-7901
A5	EXT-	A5 SATELLITE BLUE MC			
HU	EXT-	HU NEO GREEN			
M8	EXT-	M8 MONTEGO BLUE M			
PT	EXT-	PT CHAST WHITE			

6C10 NA35*V-726284
7717 NA35*V-738778
7901 NA35*V-739040

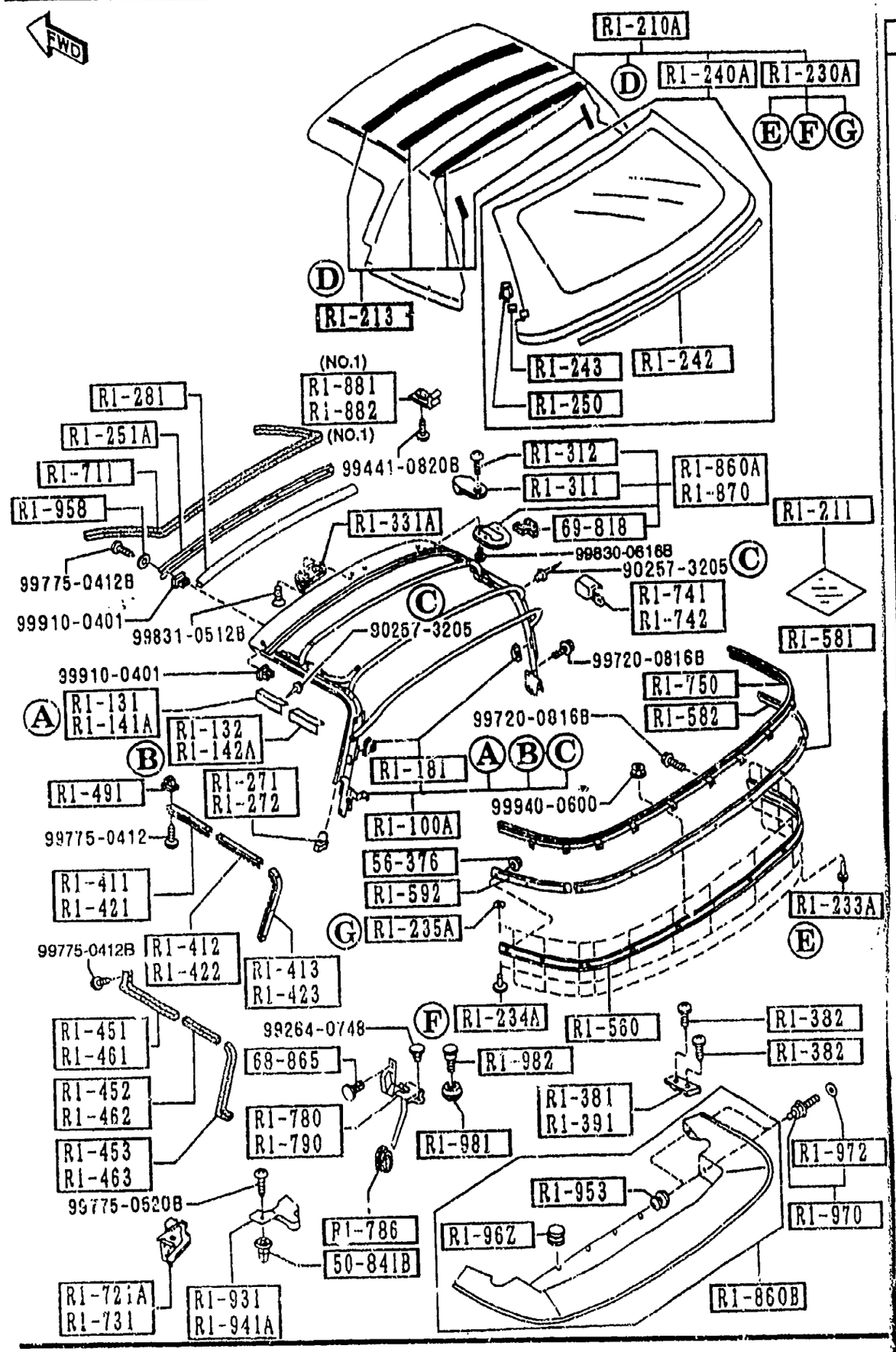

AUNA06

PART NO.	QTY	MODEL/RESTRICTION	MODEL/RESTRICTION	MODEL/RESTRICTION	FROM-TO
CONT'D					
PZ	EXT-	PZ BRILLIANT BLACK			
SU	EXT-	SU CLASSIC RED			
23	EXT-	13C MARINA GREEN MC			
57	EXT-	12K TWILIGHT BLUE			
*NB40-R1-810C	1	(W/DETACHABLE HARD TOP)			7901-
* A5	EXT-	A5 SATELLITE BLUE MC			
* HU	EXT-	HU NEO GREEN			
* M8	EXT-	M8 MONTEGO BLUE M			
* PT	EXT-	PT CHAST WHITE			
* PZ	EXT-	PZ BRILLIANT BLACK			
* SU	EXT-	SU CLASSIC RED			
* 23	EXT-	13C MARINA GREEN MC			
* 57	EXT-	12K TWILIGHT BLUE			
R1-832		PLATE,CUSHION-D. TOP			
NA01-R1-832A	2	(W/DETACHABLE HARD TOP)			
R1-860A		LOCK(R),TOP			
NA01-R1-310E A (NA01-R1-310F)	1	(W/O DETACHABLE HARD TOP)			-7722
*NA01-R1-310E A (NA01-R1-310F)	2	(W/DETACHABLE HARD TOP)			-7722
*NA01-R1-310F A (NA01-R1-310G)	1	(W/O DETACHABLE HARD TOP)			7722-7A15
*NA01-R1-310F A (NA01-R1-310G)	2	(W/DETACHABLE HARD TOP)			7722-7A15
*NA01-R1-310G	1	(W/O DETACHABLE HARD TOP)			7A15-
*NA01-R1-310G	2	(W/DETACHABLE HARD TOP)			7A15-
R1-860B		BOOT,TOP			
NA01-R1-960F	1				-7401
66	INT-	NA3 BLACK			
88	INT-	NA5 TAN			
NA01-R1-960H	1				7401-
66	INT-	NA3 BLACK			
88	INT-	NA5 TAN			

7401 NA35*V-734532
7722 NA35*V-738852
7901 NA35*V-739040
7A15 NA35*V-739052

(W/DETACHABLE HARDTOP)

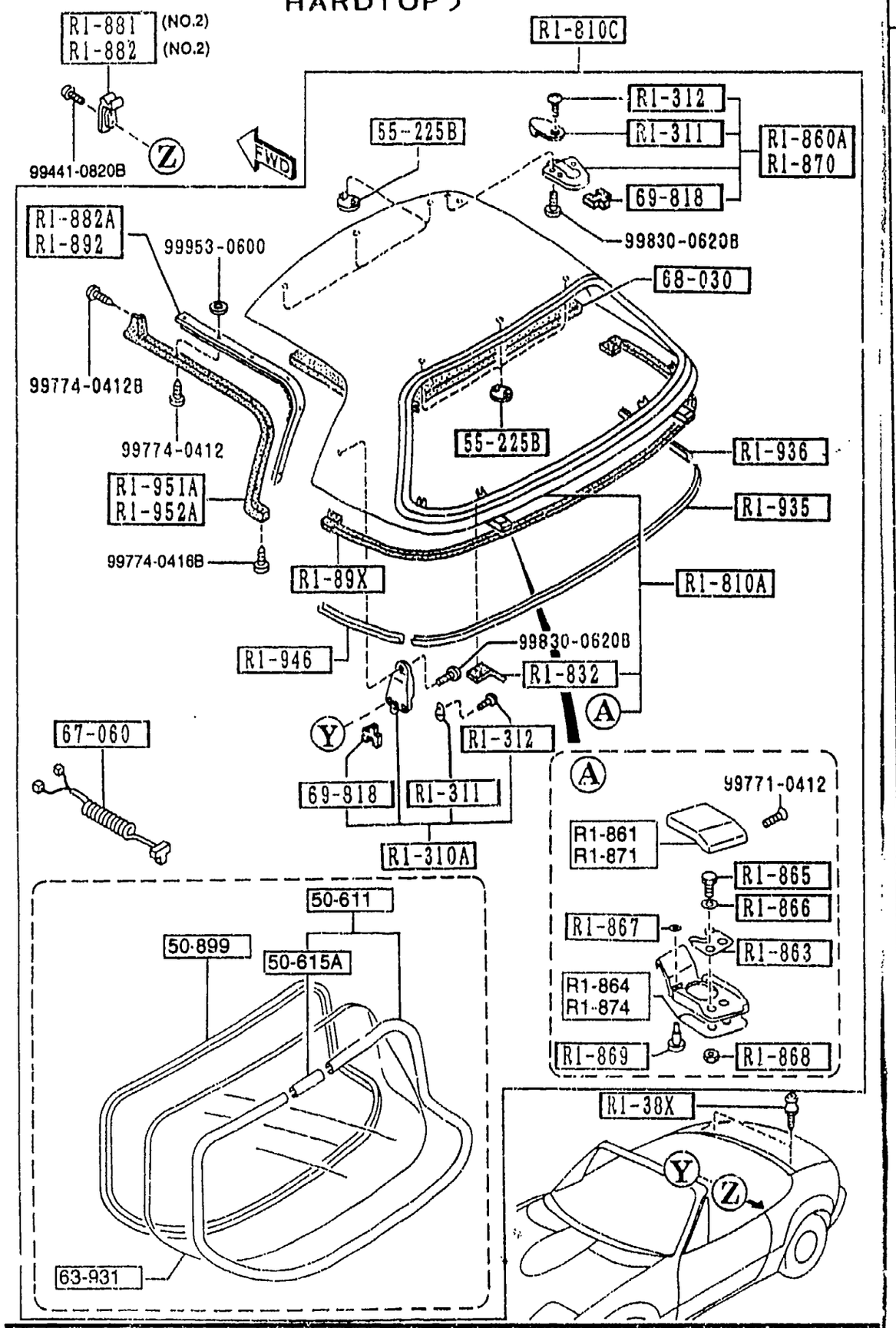

AUNA06

PART NO.	QTY	MODEL/RESTRICTION	MODEL/RESTRICTION	MODEL/RESTRICTION	FROM-TO
R1-861 NA01-R1-861	1	COVER(R),DECK LOCK (W/DETACHABLE HARD TOP)			
R1-863 NA01-R1-863	2	PLATE,DECK LOCK (W/DETACHABLE HARD TOP)			
R1-864 NA01-R1-864	1	SHEET(R),DECK LOCK (W/DETACHABLE HARD TOP)			
R1-865 NA01-R1-865	4	BOLT,DECK LOCK (W/DETACHABLE HARD TOP)			
R1-866 NA01-R1-866	4	WASHER'A',DECK LOCK (W/DETACHABLE HARD TOP)			
R1-067 NA01-R1-867	2	WASHER'B',DECK LOCK (W/DETACHABLE HARD TOP)			
R1-868 NA01-R1-868	4	NUT,DECK LOCK (W/DETACHABLE HARD TOP)			
R1-869 NA01-R1-869	2	PIN,DECK LOCK (W/DETACHABLE HARD TOP)			
R1-870 NA01-R1-320EA (NA01-R1-320F)	1	LOCK(L),TOP (W/O DETACHABLE HARD TOP)			-7722
*NA01-R1-320EA (NA01-R1-320F)	2	(W/DETACHABLE HARD TOP)			-7722
*NA01-R1-320FA (NA01-R1-320G)	1	(W/O DETACHABLE HARD TOP)			7722-7A15
*NA01-R1-320FA (NA01-R1-320G)	2	(W/DETACHABLE HARD TOP)			7722-7A15
*NA01-R1-320G	1	(W/O DETACHABLE HARD TOP)			7A15-
*NA01-R1-320G	2	(W/DETACHABLE HARD TOP)			7A15-

7722 NA35*V-738852
7A15 NA35*V-739052

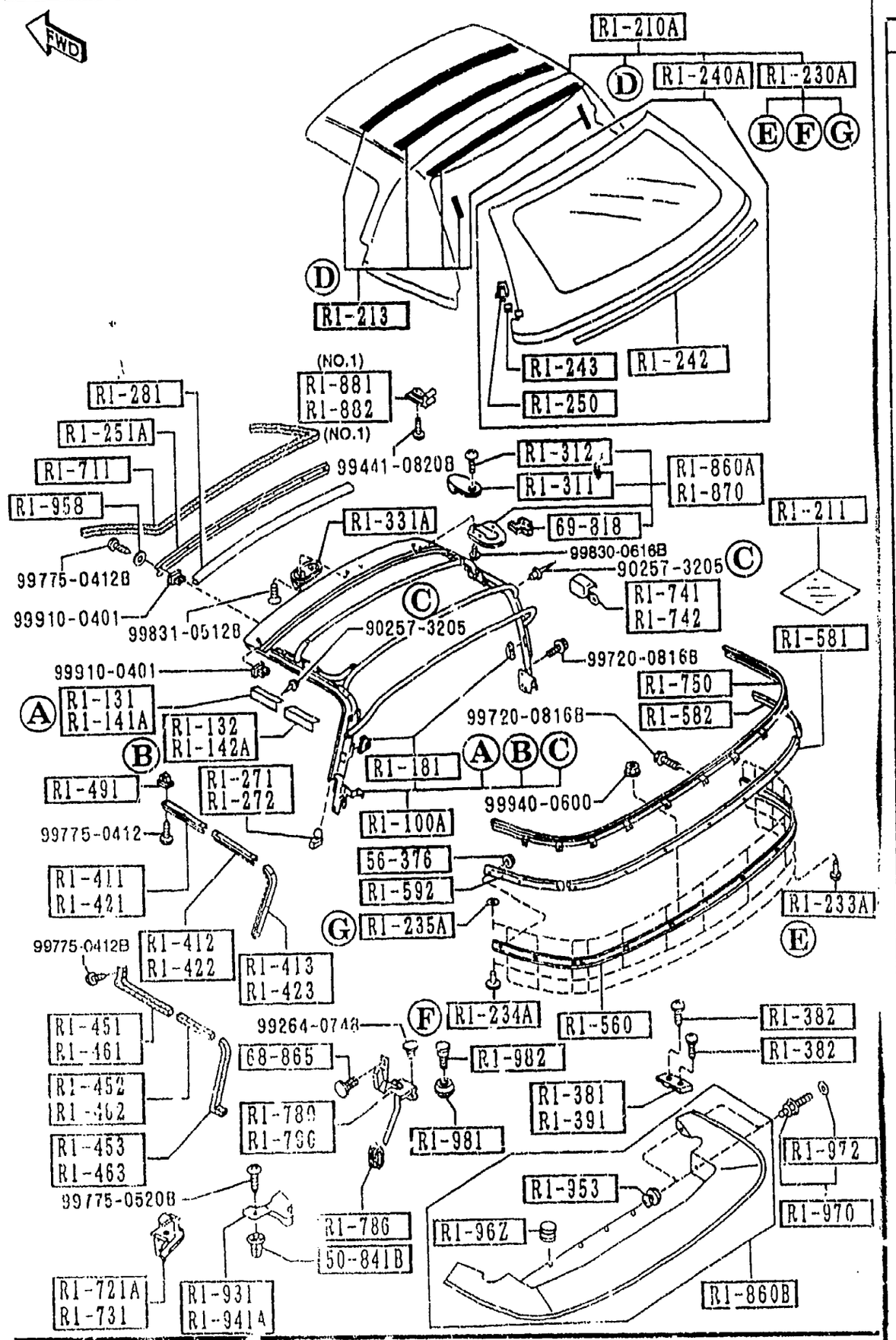

AUNA06

PART NO.	QTY	MODEL/RESTRICTION	MODEL/RESTRICTION	MODEL/RESTRICTION	FROM-TO
R1-871		COVER(L),DECK LOCK			
NA01-R1-871	1	(W/DETACHABLE HARD TOP)			
R1-874		SHEET(L),DECK LOCK			
NA01-R1-874	1	(W/DETACHABLE HARD TOP)			
R1-881		STRIKER(R),LOCK-TOP			
NA01-R1-361D	1	(ILLUST. NO.1)			
NA02-R1-361D	1	(ILLUST. NO.2) (W/DETACHABLE HARD TOP)			
R1-882		STRIKER(L),LOCK-TOP			
NA01-R1-371D	1	(ILLUST. NO.1)			
NA02-R1-371D	1	(ILLUST NO.2) (W/DETACHABLE HARD TOP)			
R1-882A		RETAINER(R),WTHSTP-D.TOP			
NA01-R1-882	1	(W/DETACHABLE HARD TOP)			
R1-89X		WEATHERSTRIP,D.TOP-REAR			
NA01-R1-89XA (NA01-R1-89XB)	1	(W/DETACHABLE HARD TOP)			-7722
*NA01-R1-89XB	1	(W/DETACHABLE HARD TOP)			7722-
R1-892		RETAINER(L),WTHSTP-D.TOP			
NA01-R1-892	1	(W/DETACHABLE HARD TOP)			
R1-931		COVER(R),BELT LINE			
NA01-R1-931A	1				
R1-935		PROTECTOR(C),EDGE-D.TOP			
NA01-R1-935B	1	(W/DETACHABLE HARD TOP)			
R1-936		PROTECTOR(R),EDGE-D.TOP			
NA01-R1-936A	1	(W/DETACHABLE HARD TOP)			

7722 NA35*V-738852

(W/DETACHABLE HARDTOP)

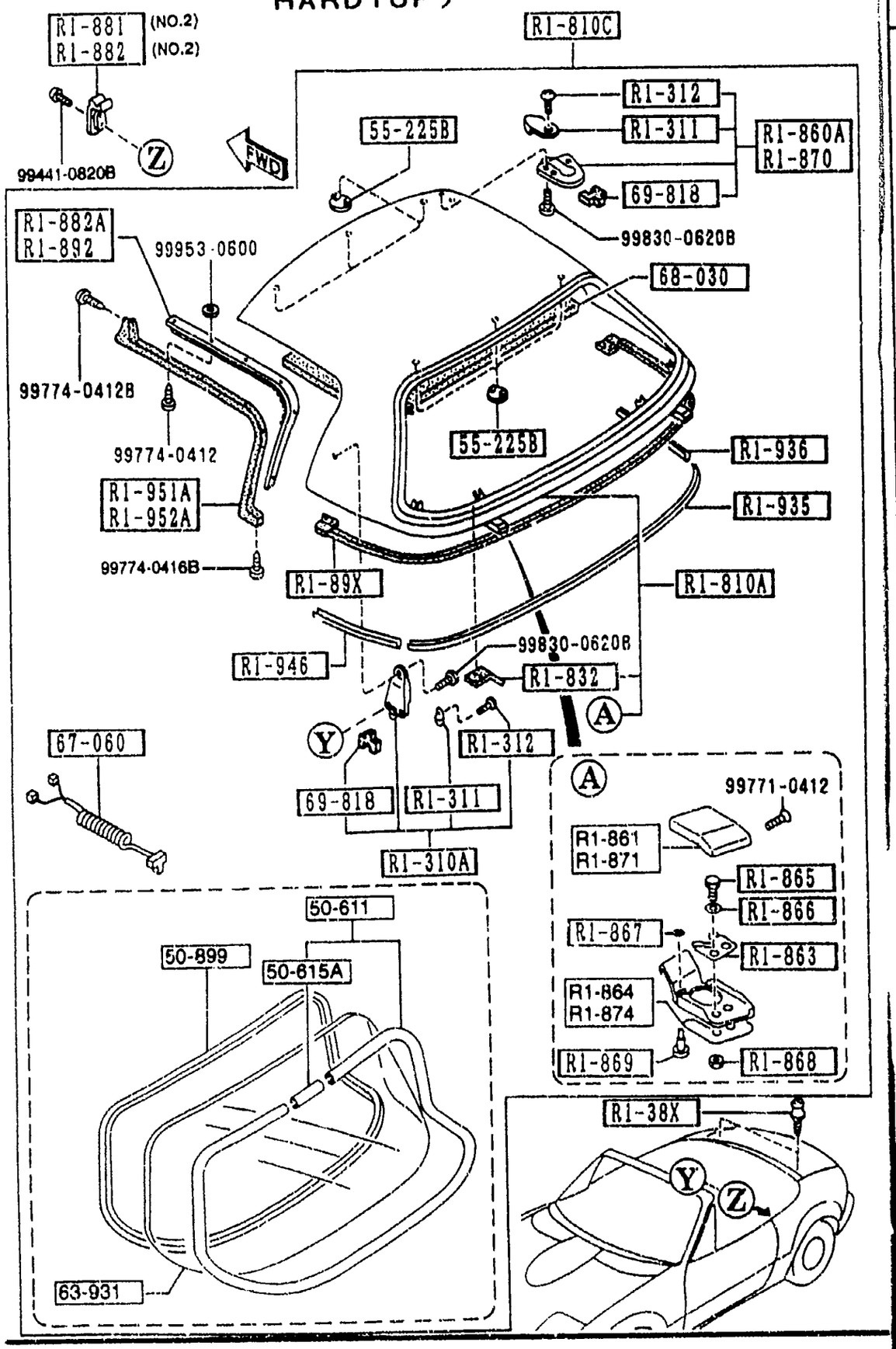

AUNA06

PART NO.	QTY	MODEL/RESTRICTION	MODEL/RESTRICTION	MODEL/RESTRICTION	FROM-TO
R1-941A NA01-R1-941A	1	COVER(L),BELT LINE			
R1-946 NA01-R1-946A	1	PROTECTOR(L),EDGE-D. TOP (W/DETACHABLE HARD TOP)			
R1-951A NA01-R1-881B	1	WTHSTP(R),ROOF PANEL (W/DETACHABLE HARD TOP)			
R1-952A NA01-R1-891B	1	WTHSTP(L),ROOF PANEL (W/DETACHABLE HARD TOP)			
R1-953 B235-R1-953	4	HOOK,HOOD-REAR CORNER			
R1-958 B235-R1-958A	7	WASHER,HOOK'A'&'B'			
R1-96Z NA01-R1-96Z	7	HOOK,TOP BOOT			
00	INT-	NA3 BLACK			
75	INT-	NA5 SILVER			
R1-970 NA01-R1-970A	4	HOOK,REAR DECK			
R1-972 NA01-R1-926	4	WASHER,HOOK'A'			
R1-981 NA01-R1-981A	2	STOPPER,SOFT TOP			
R1-982 NA01-R1-982B	2	BOLT,STOPPER-SOFT TOP			
50-611 *NAY1-63-930	1	MOULD,RR.WINDOW (W/DETACHABLE HARD TOP)			

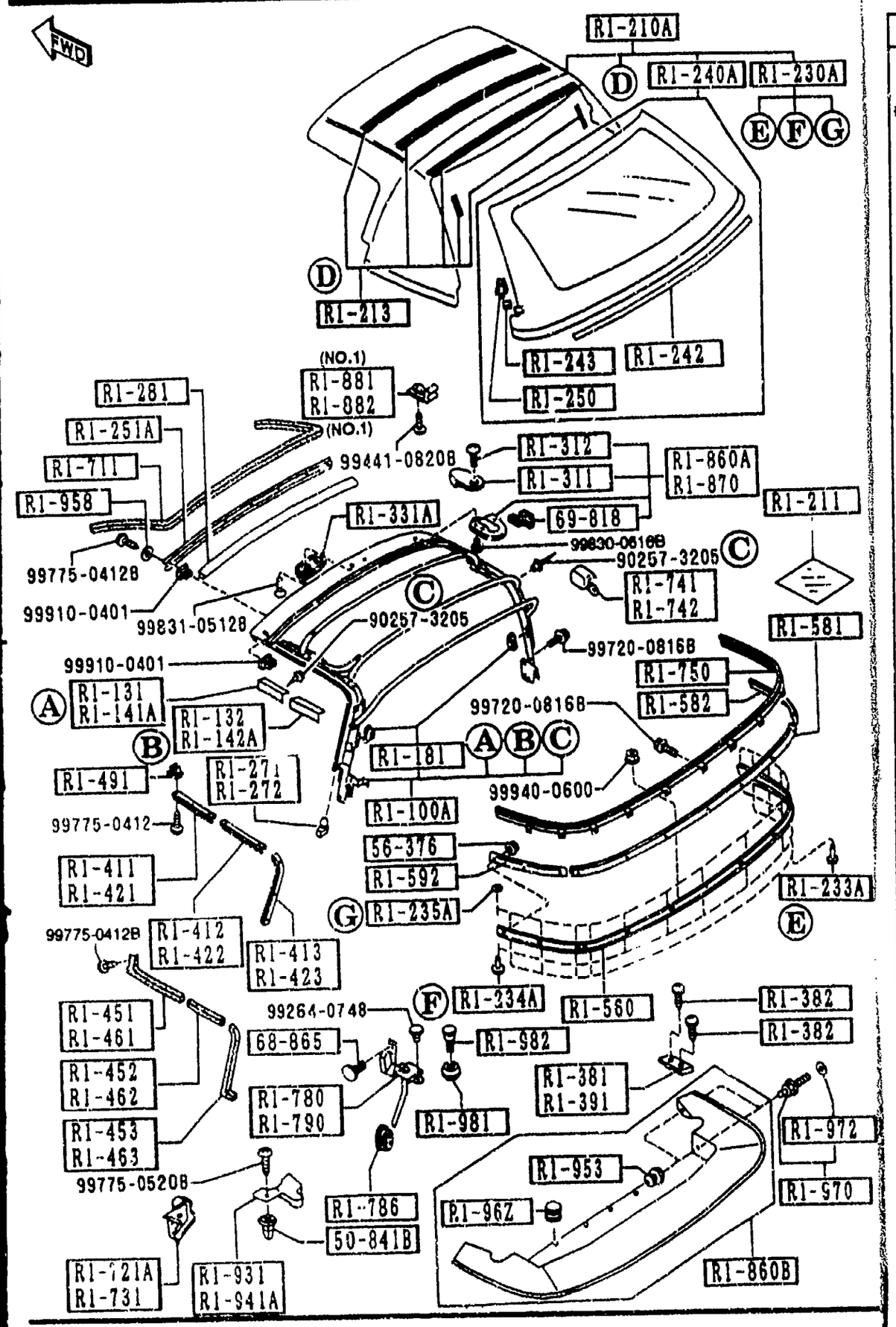

AUNA06

PART NO.	QTY	MODEL/RESTRICTION	MODEL/RESTRICTION	MODEL/RESTRICTION	FROM-TO
50-615A		JOINT,BACK WINDOW MOULD			
*NA01-63-934	1	(W/DETACHABLE HARD TOP)			
50-841B		GROMMET,SCREW			
H260-50-841	2				
50-899		DAM,REAR-WIND.			
*NA01-63-895	1	(W/DETACHABLE HARD TOP)			
55-225B		COVER,HOLE			
G030-55-225	6	(W/DETACHABLE HARD TOP)			
00	INT-	NA3 NA5 BLACK			
56-376		NUT,SELF LOCK			
B001-56-376	13				
63-931		GLASS,BACK WINDOW			
*NB40-63-931	1	(W/DETACHABLE HARD TOP)			
67-060		HARNESS NO.2,REAR			
N007-67-060A	1	(W/DETACHABLE HARD TOP)			
68-030		CEILING,TOP			
N007-68-331	1	(W/DETACHABLE HARD TOP)			
00	INT-	NA3 NA5 BLACK			
68-865		FASTENER			
G032-68-865A	2				
00	INT-	NA3 BLACK			
67	INT-	NA5 1AN			
69-818		PAD			
NA01-R1-313 A (NA01-R1-313A)	2	(W/O DETACHABLE HARD TOP)			-7722
NA01-R1-313 A (NA01-R1-313A)	6	(W/DETACHABLE HARD TOP)			-7722
*NA01-R1-313A	2	(W/O DETACHABLE HARD			7722-7A15

7722 NA35*V-738852
7A15 NA35*V-739052

(W/DETACHABLE HARDTOP)

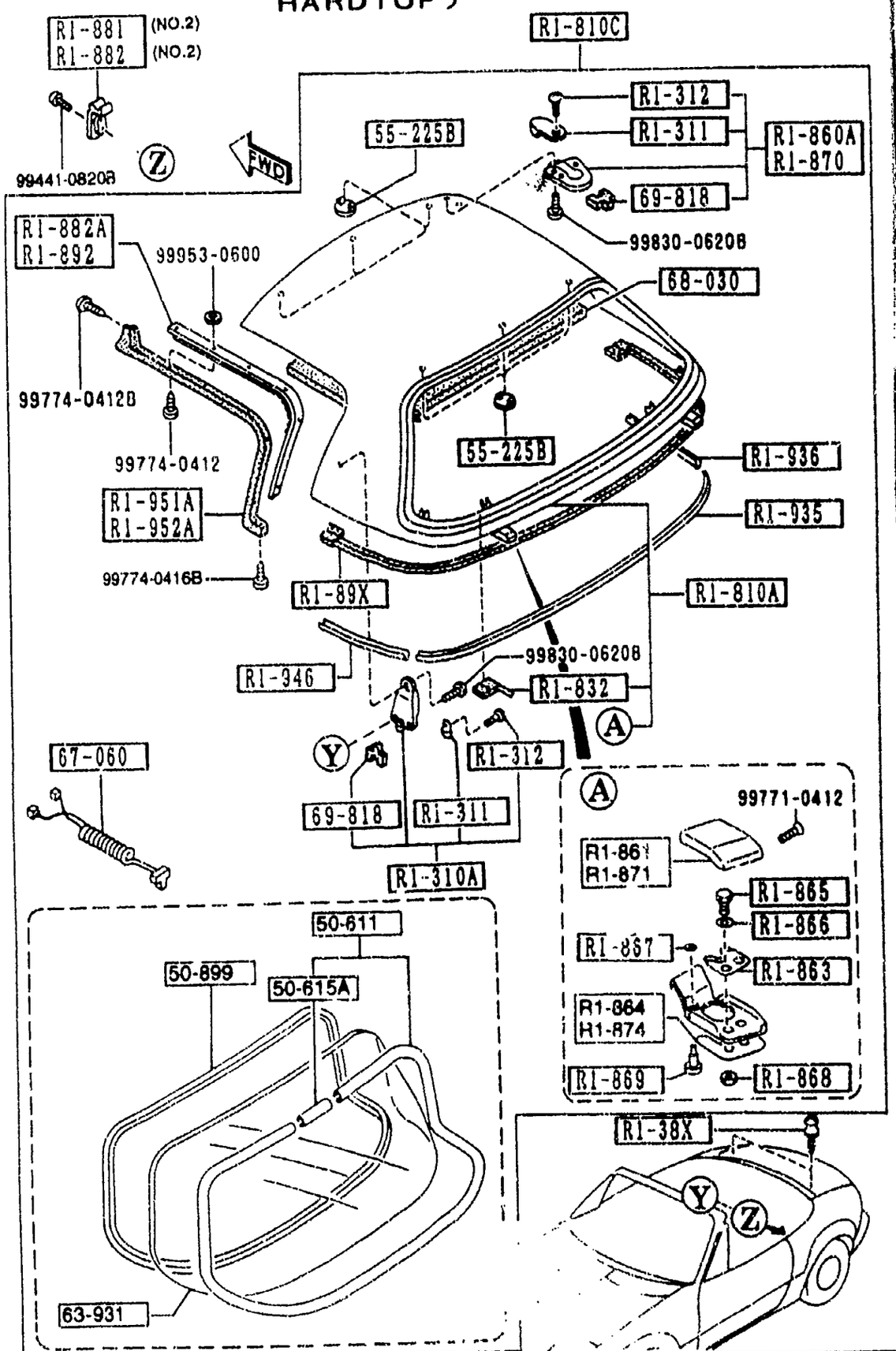

PART NO.	QTY	MODEL/RESTRICTION	MODEL/RESTRICTION	MODEL/RESTRICTION	FROM-TO
CONT'D					
A (NA01-R1-313B)		TOP)			
*NA01-R1-313A	6	(W/DETACHABLE HARD T			7722-7A15
A (NA01-R1-313B)		OP)			
*NA01-R1-313B	2	(W/O DETACHABLE HARD			7A15-
		TOP)			
*NA01-R1-313B	6	(W/DETACHABLE HARD T			7A15-
		OP)			

7722 NA35*V-738852
7A15 NA35*V-739052

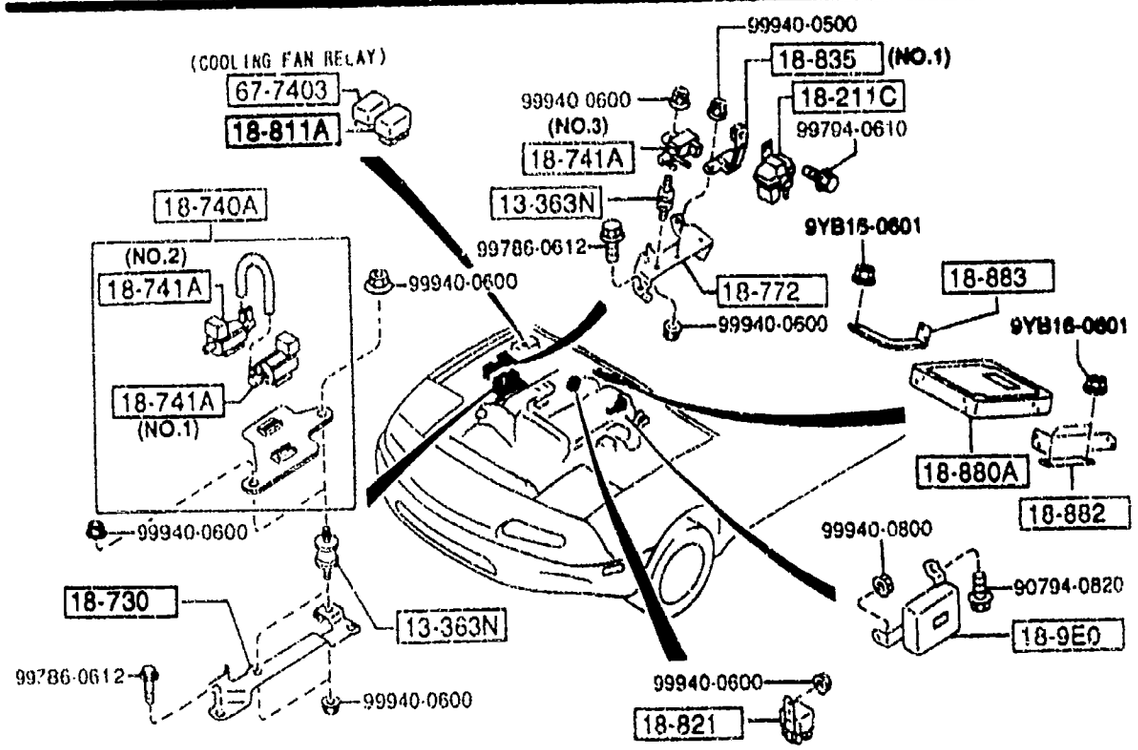
(COOLING FAN RELAY)
67-7403
18-811A
99940-0500
18-835 (NO.1)
99940 0600
(NO.3)
18-741A
18-211C
99704-0610
13-363N
99786-0612
9YB15-0601
18-740A
(NO.2)
18-741A
99940-0600
18-772
18-883
99940-0600
9YB16-0601
18-741A
(NO.1)
18-880A
18-882
99940-0600
99940-0800
90794-0820
18-730
13-363N
18-9E0
99786-0612
99940-0600
99940-0600
18-821

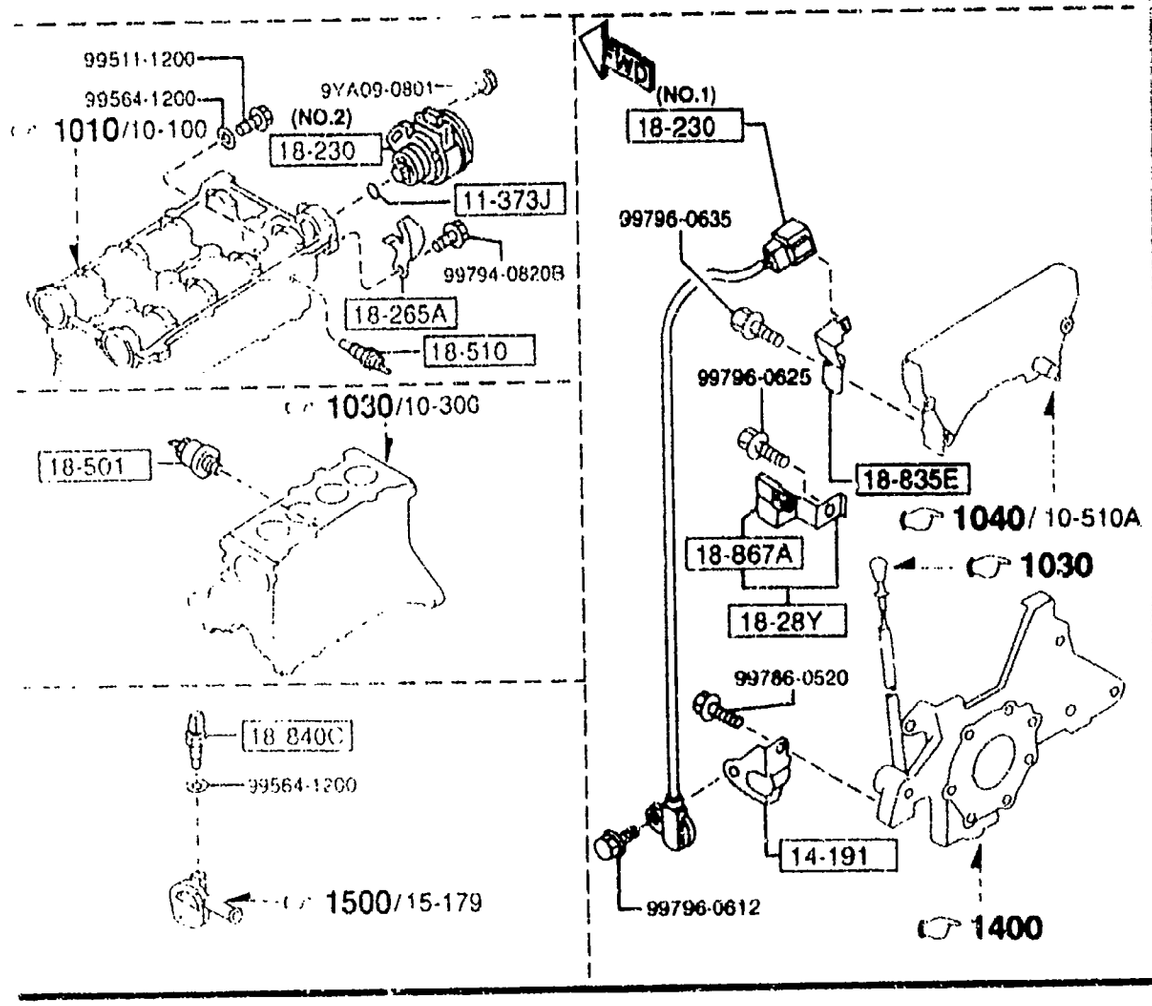
99511-1200
99564-1200
9YA09-0801
1010/10-100
(NO.2)
18-230
11-373J
99794-0820B
18-265A
18-510
1030/10-300
18-501
18-840C
99564-1200
1500/15-179
FWD
(NO.1)
18-230
99796-0635
99796-0625
18-835E
1040/10-510A
18-867A
1030
18-28Y
99786-0520
14-191
99796-0612
1400

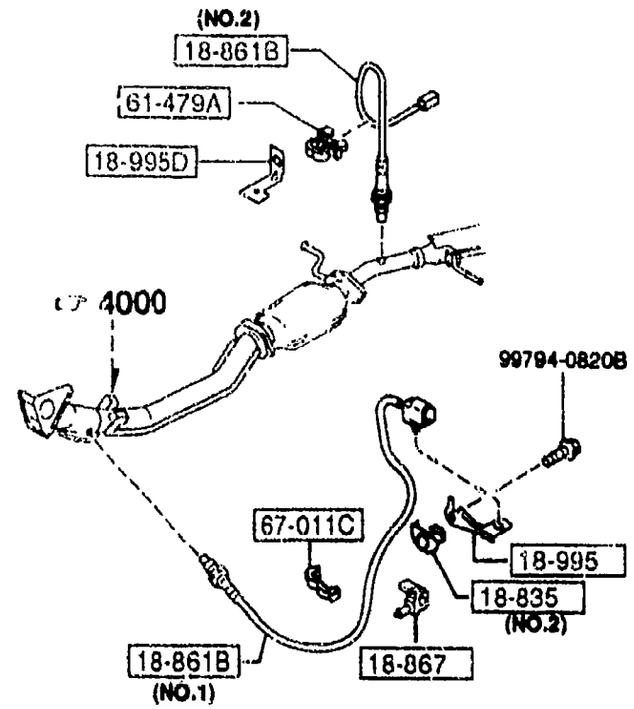
(NO.2)
18-861B
61-479A
18-995D
4000
99794-0820B
67-011C
18-995
18-835
(NO.2)
18-861B
(NO.1)
18-867

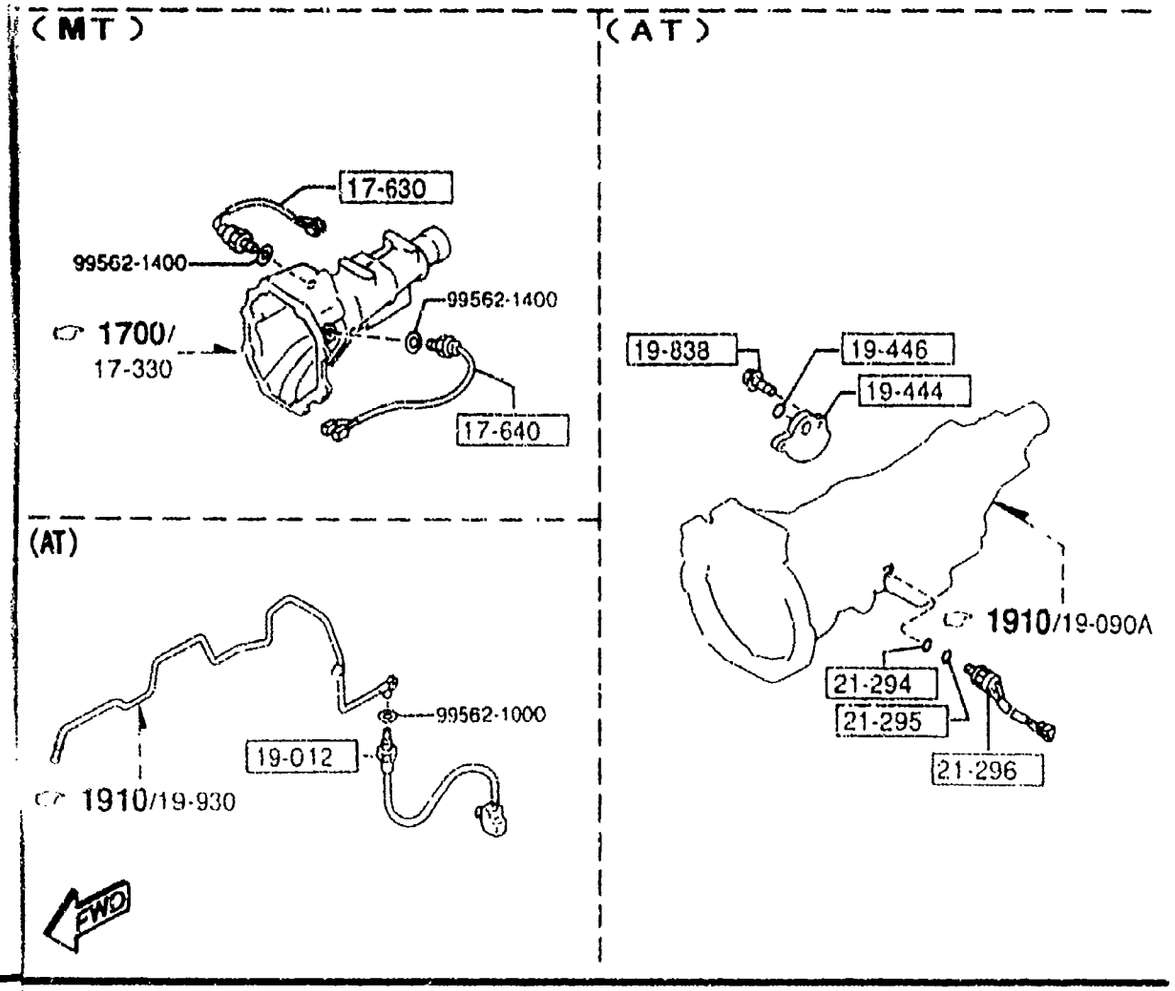
(MT)
(AT)
17-630
99562-1400
99562-1400
1700/
17-330
17-640
(AT)
19-838
19-446
19-444
1910/19-090A
21-294
21-295
21-296
99562-1000
19-012
1910/19-930
FWD

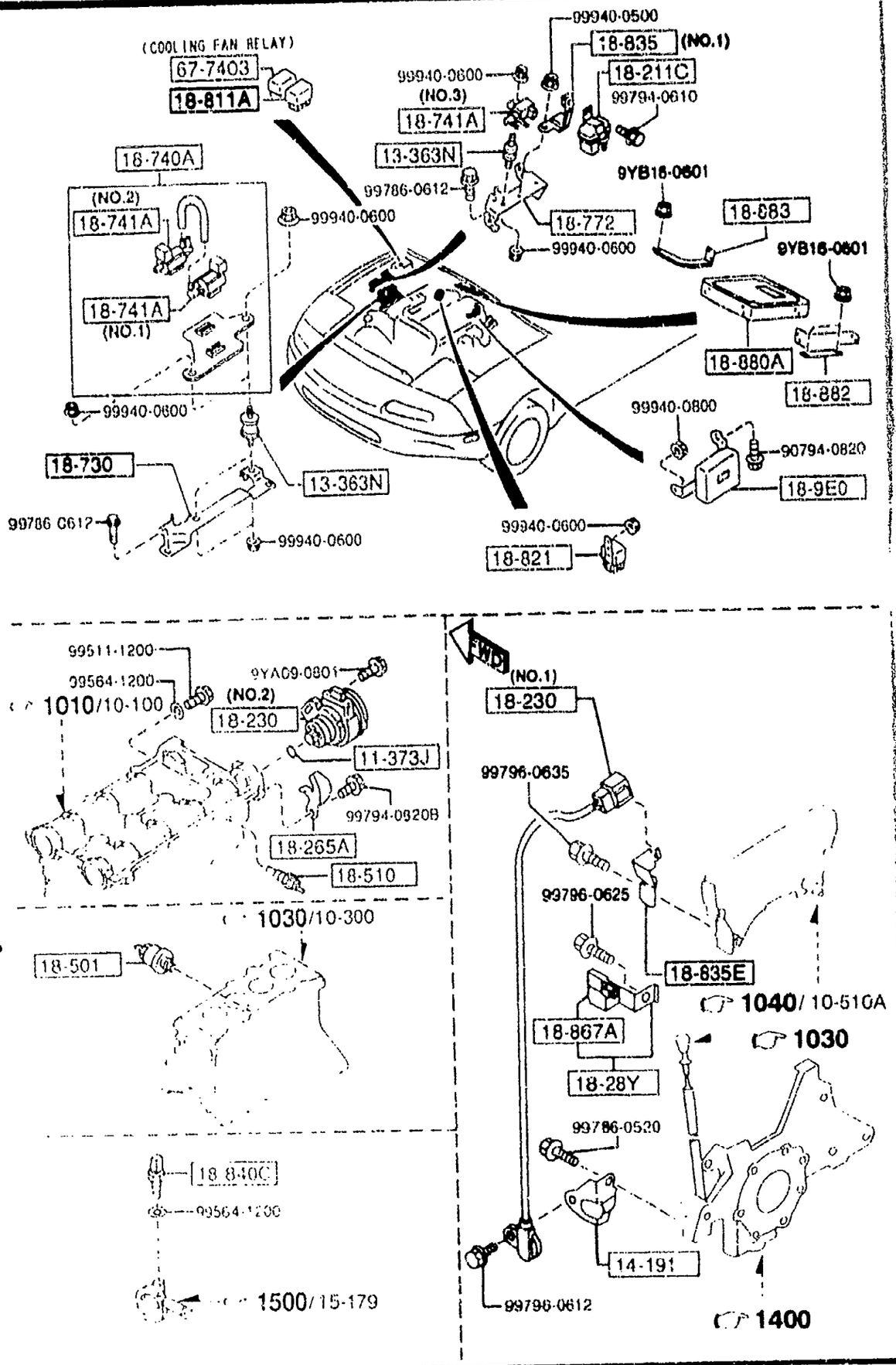

AUNA06

PART NO.	QTY	MODEL/RESTRICTION	MODEL/RESTRICTION	MODEL/RESTRICTION	FROM-TO
11-373J 99541-03801	1	RING,'O'			
13-363N 0222-13-363	3	RUBBER,MOUNTING			
14-191 B6BF-14-190	1	BRACKET,OIL PUMP			
17-630 B118-17-640B	1	SWITCH (MT)			
17-640 M506-17-640A	1	SWITCH,BACK UP LAMP (MT)			
18-211C BPS1-18-211	1	SENSOR,M.A.P.			
18-230 BPS1-18-221 BPE8-18-230	1 1	SENSOR,CRANKSHAFT POSI. (ILLUST. NO.1) (ILLUST. NO.2)			
18-265A BPE8-18-281A	1	BRACKET,COUPLER-KNOCK SENSOR			
18-28Y B6BF-18-28Y	1	BRACKET,CONDENSER			
18-501 B367-18-501	1	SWITCH,OIL PRESSURE			
18-510 B541-18-51X	1	UNIT,HEAT GAUGE PANASONIC			
KL01-18-51X	1	NIHON THERMOSTAT			
18-730 BPE8-18-730A	1	FILTER,AIR			
18-740A		VALVE,SOLENOID			

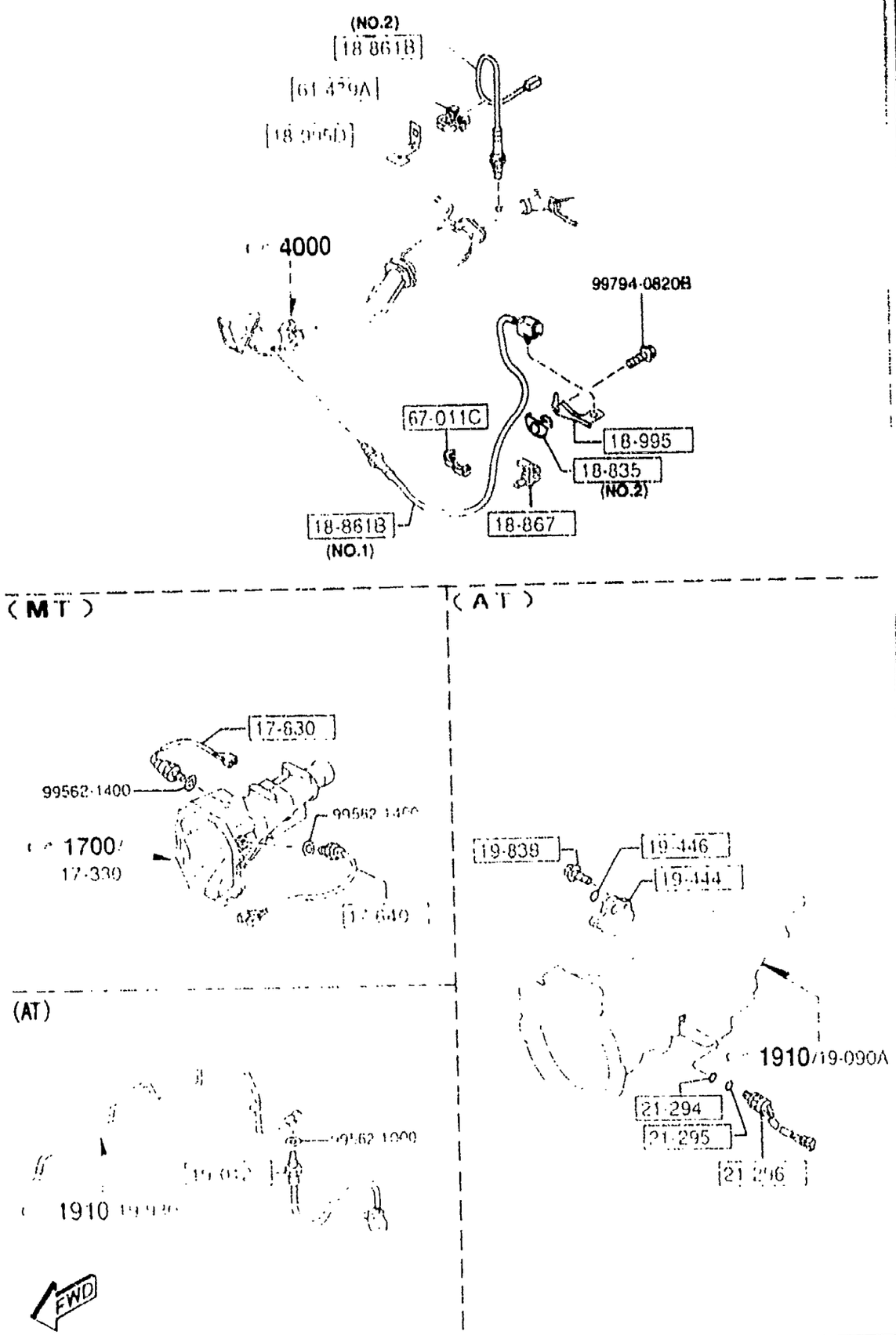

AUNA06

6600 -2 ENGINE SWITCHES & RELAYS

PART NO	QTY	MODEL/RESTRICTION	MODEL/RESTRICTION	MODEL/RESTRICTION	FROM-TO
CONT'D					
BPE8-18-74XA	1				
18-741A		VALVE,THREE WAY			
F2L3-18-741	1	(ILLUST. NO.1)			
F2L4-18-741	1	(ILLUST. NO.2)			
JE16-18-741	1	NIHON OIL SEAL (ILLUST. NO.3)			
18-772		BRACKET,IGNITER			
B61P-18-2F0B	1				
18-811A		RELAY,CONTROL			
B5B4-18-811	1				
18-821		RELAY,FUEL PUMP			
B577-18-821A	1				
18-835		BRACKET,WIRE CLIP-OXYGEN			
BPS1-18-835A	1	(ILLUST. NO.1)			
BPE8-18-838B	1	(ILLUST. NO.2)			
18-835E		BRACKET,BOOST SENSOR			
BPS2-18-835	1				
18-840C		SENSOR,TEMP.-ENG.COOLANT			
B593-18-840A	1	DENSO			
18-861B		SENSOR,OXYGEN			
BP3A-18-861	1	(ILLUST. NO.1)			
BP3B-18-861	1	(ILLUST. NO.2)			
18-867		CLIP			
BPE8-18-067A	1				
18-867A		CLIP,WIRE			
B366-18-867A	1				
18-880A		MODULE,POWERTr IN CONTRUL			-7106
BP3A-18-881A A (BP3A-18-881B)	1				

7106 NA35*V-727842

CAT. AUNA06-03 1998-07

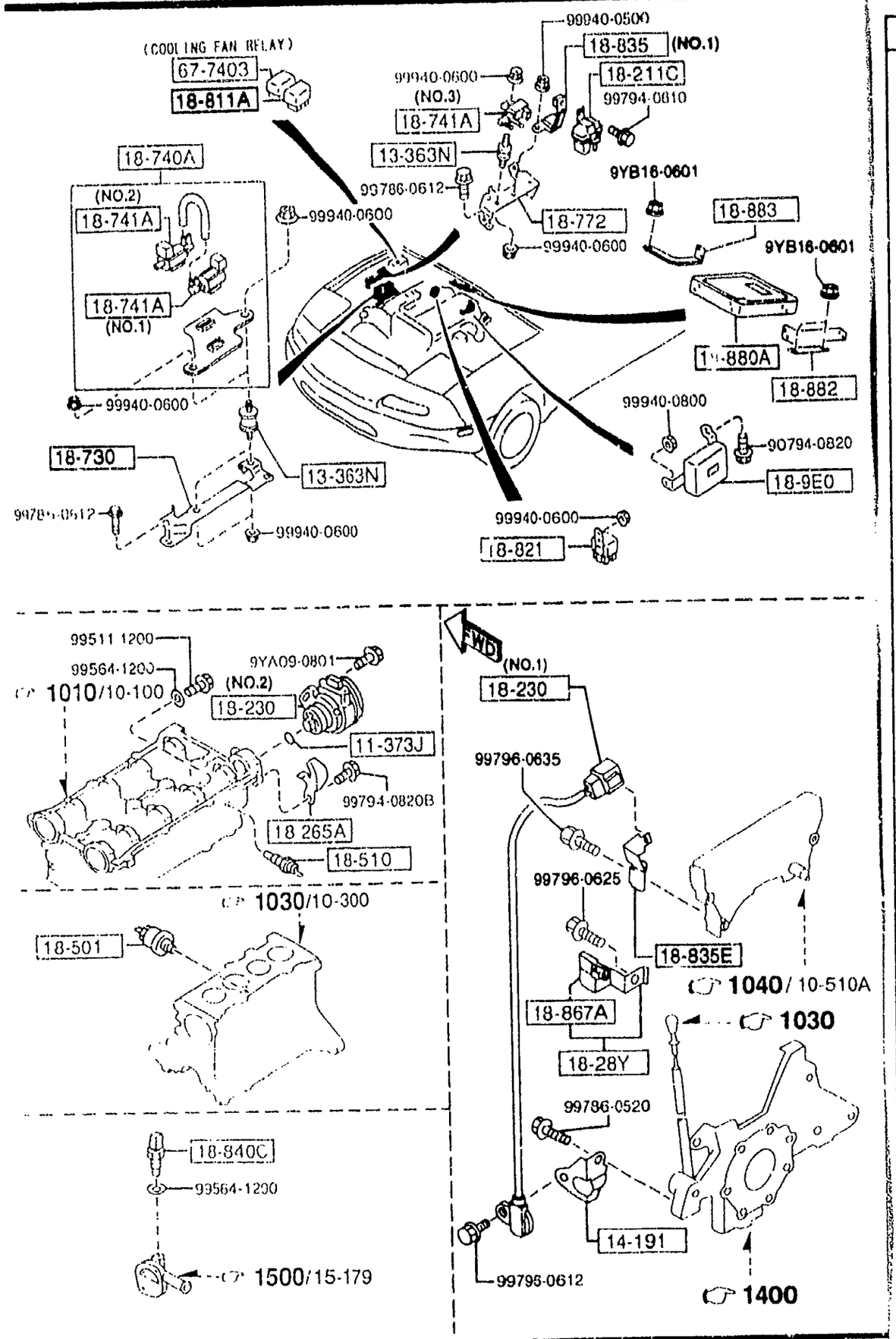

PART NO	QTY	MODEL/RESTRICTION	MODEL/RESTRICTION	MODEL/RESTRICTION	FROM-TO
CONT'D					
BP3A-18-881B	1				7106-
18-882		BRACKET,CONTROL UNIT			
BPE8-18-882	1				
18-883		BRACKET,CONTROL UNIT			
BPS1-18-883	1				
18-9E0		MODULE,PWT.CONT.-A/T			
BP3A-18-9E1	1	(AT)			
18-995		CLIP			
BPE8-18-998B	1				
18-995D		BRACKET,COUPLER-02 SENSOR			
BPS1-18-998B	1				
19-012		SENSOR,OIL TEMP			
N451-19-012A	1	(AT)			
19-444		SWITCH,INHIBITOR			
N451-19-444	1	(AT)			
19-446		RING,'O'			
0338-19-446	1	(AT)			
19-838		BOLT-HEX,HD WASHER			
1758-19-838A	2	(AT)			
21-294		RING,'O'			
BU01-21-294	1	(AT)			
21-295		RING,'O'			
BU01-21-295	1	(AT)			
21-296		SOLENOID,LOCK UP CONTROL			
N451-21-3A5	1	(AT)			
61-479A		CLIP			
UB39-61-479A	1				

7106 NA35*V-727842

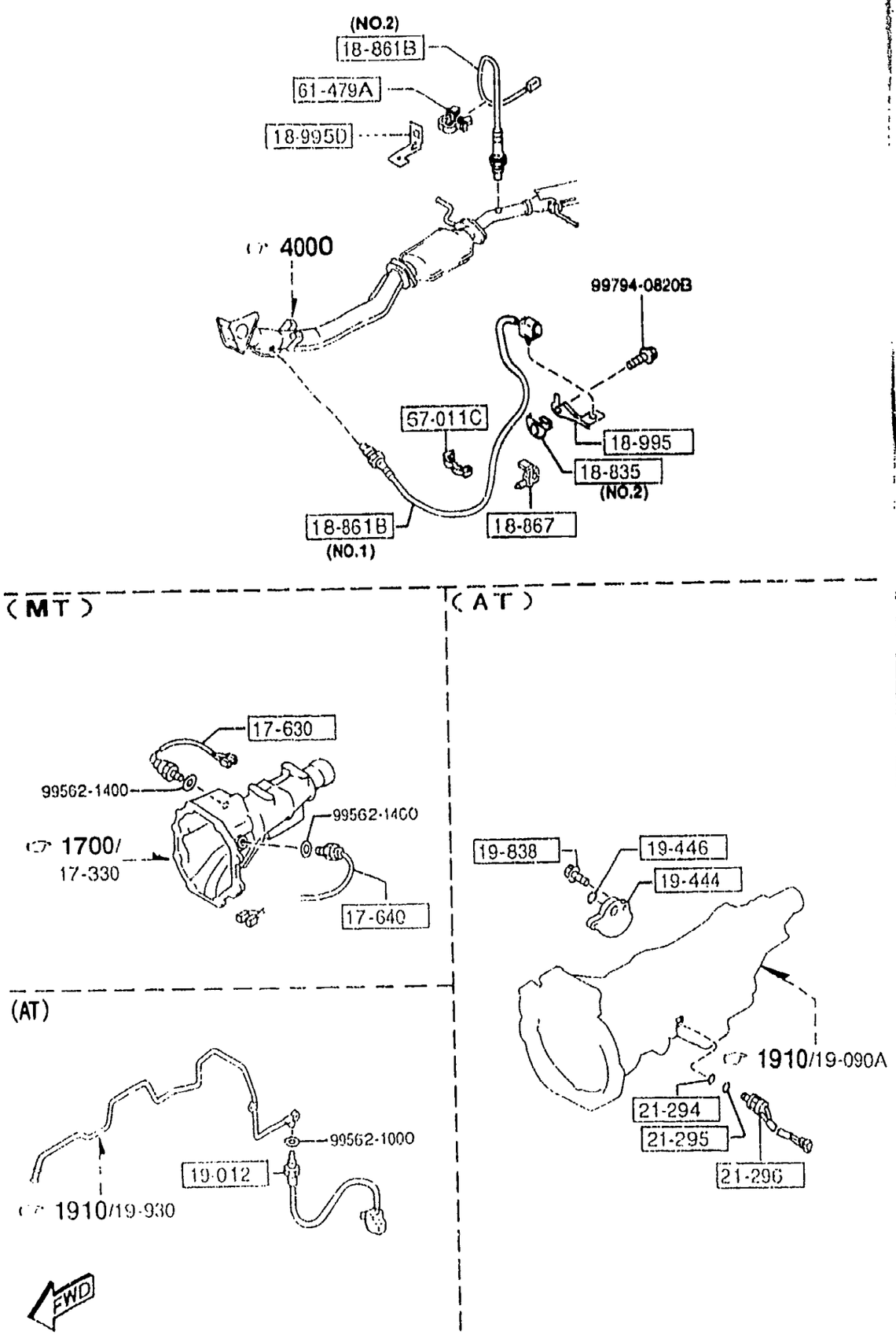

6600 -4 * ENGINE SWITCHES & RELAYS

PART NO.	QTY	MODEL/RESTRICTION	MODEL/RESTRICTION	MODEL/RESTRICTION	FROM-TO
67-011C E356-18-141	1	CLIP			
67-7403 LA10-67-740	1	RELAY,N.O. 10A (COOLING FAN RELAY)			

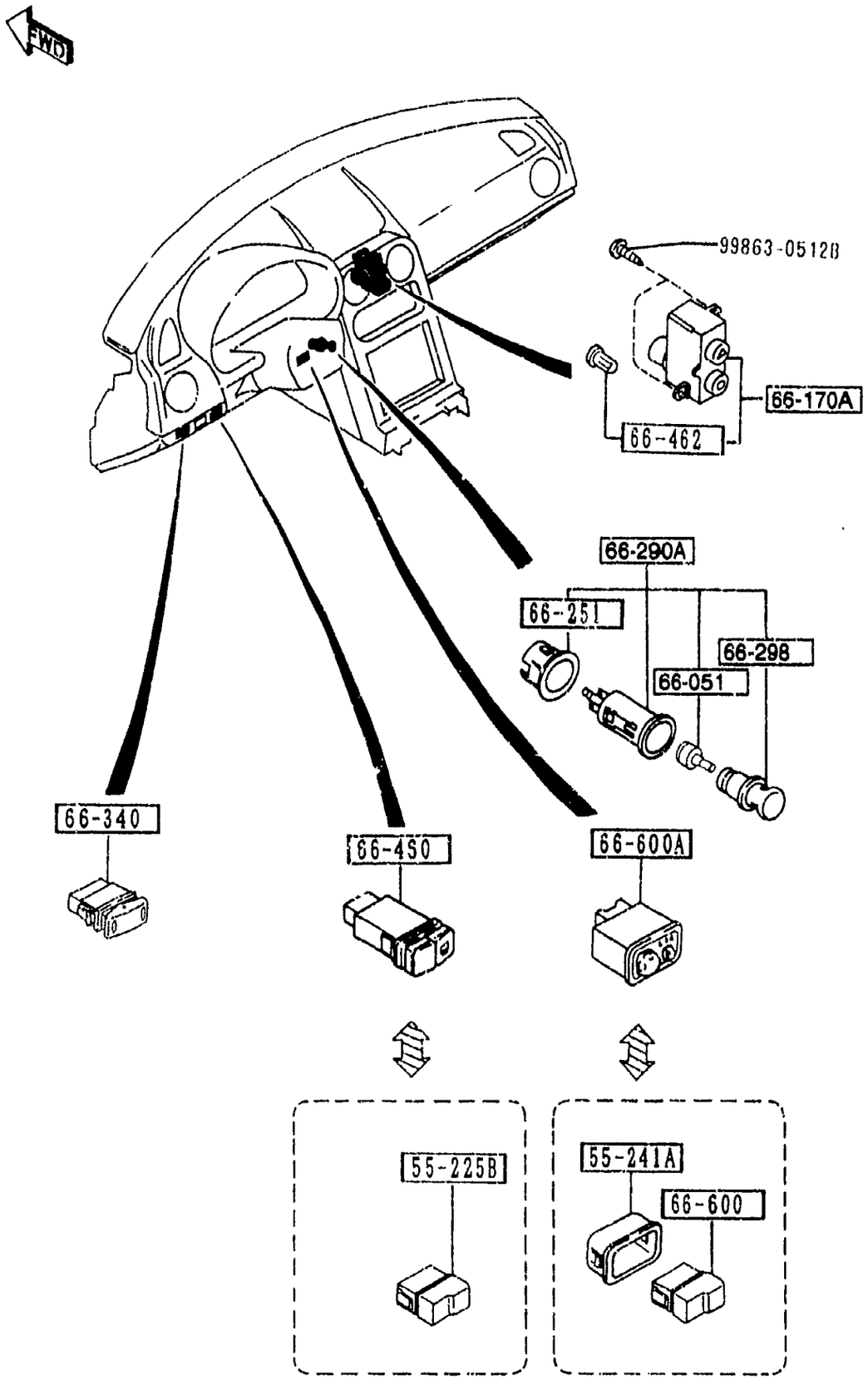

6610 -1 DASHBOARD SWITCHES

PART NO.	QTY	MODEL/RESTRICTION	MODEL/RESTRICTION	MODEL/RESTRICTION	FROM-TO
55-225B N034-55-225	1	COVER,HOLE (W/O DETACHABLE HARD TOP)			
55-241A NA01-55-241A	1	BOX,INSTRUMENT PANEL BASE, R-PKG, (MANUAL TYPE DR MIRR OR)			
00	INT-	NA3 NA5 BLACK			
66-051 B16A-66-29Y	1	CAP			
66-170A N041-66-170A	1	SWITCH(R),CLUSTER			
66-251 S09A-66-251	1	RING,ILLUMINATION			
66-290A B16A-66-290	1	OUTLET			
66-298 B16A-66-298	1	CAP,OUTLET			
66-340 NA01-66-340A	1	SWITCH,MAIN P.E.GR, L-PKG, (W/AUTO CRUISE.CONT.)			
66-460 NA75-66-460	1	SWITCH,RR.DEF. (W/DETACHABLE HARD TOP)			
66-462 NA01-66-462	1	BULB'B',SWITCH-RR DEFOGER			
66-600 B481-55-225	1	COVER,HOLE			
66-600A NA52-66-600A	1	SWITCH,RMT.MIRROR F-SV, L-PKG, P.E.GR, T-PKG, (ELECT. TYPE DR MIRR			

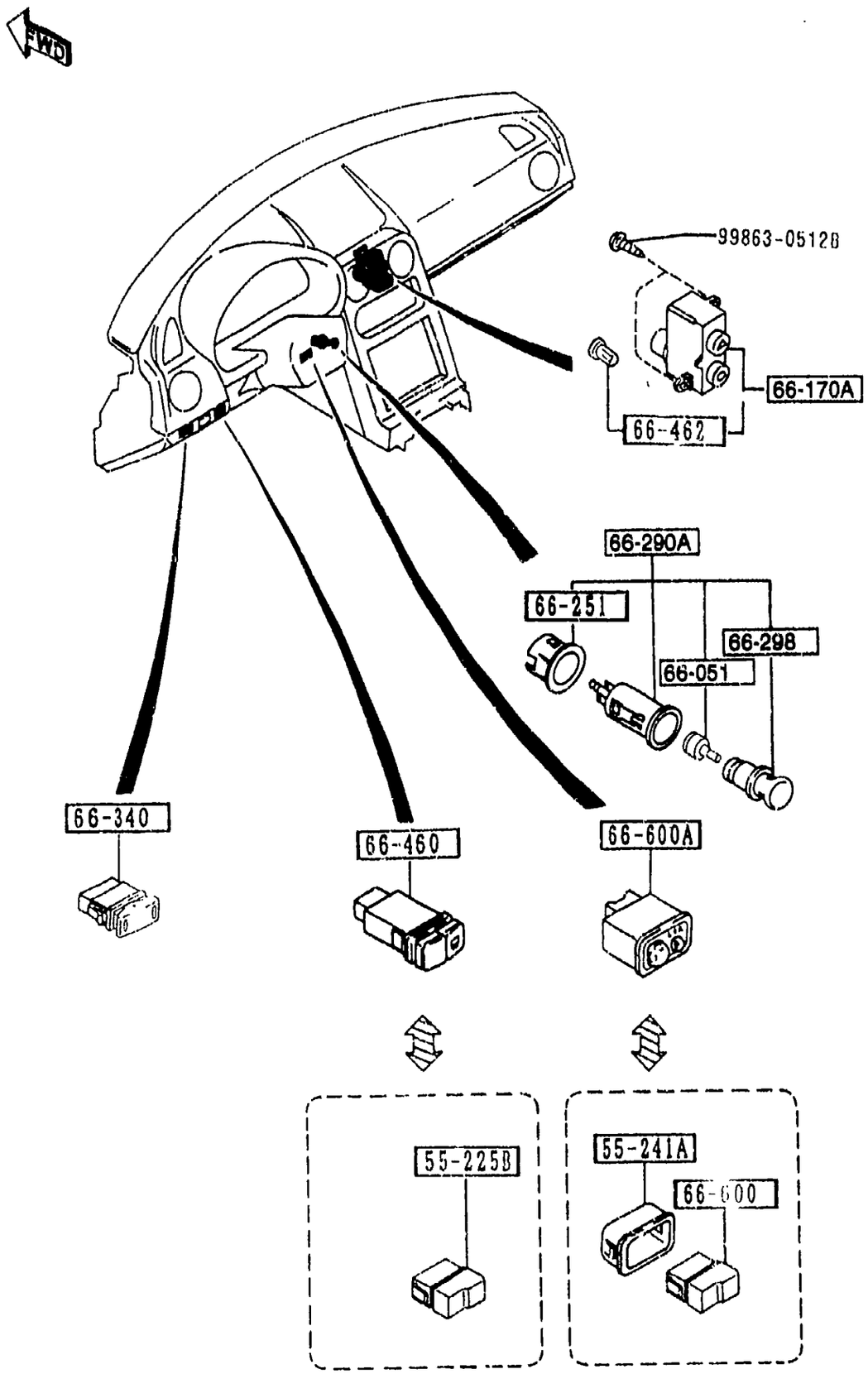

AUNA06

6610 -2 * DASHBOARD SWITCHES

PART NO.	QTY	MODEL/RESTRICTION	MODEL/RESTRICTION	MODEL/RESTRICTION	FROM-TO
CONT'D		OR)			

CAT. AUNA06-03

1998-07

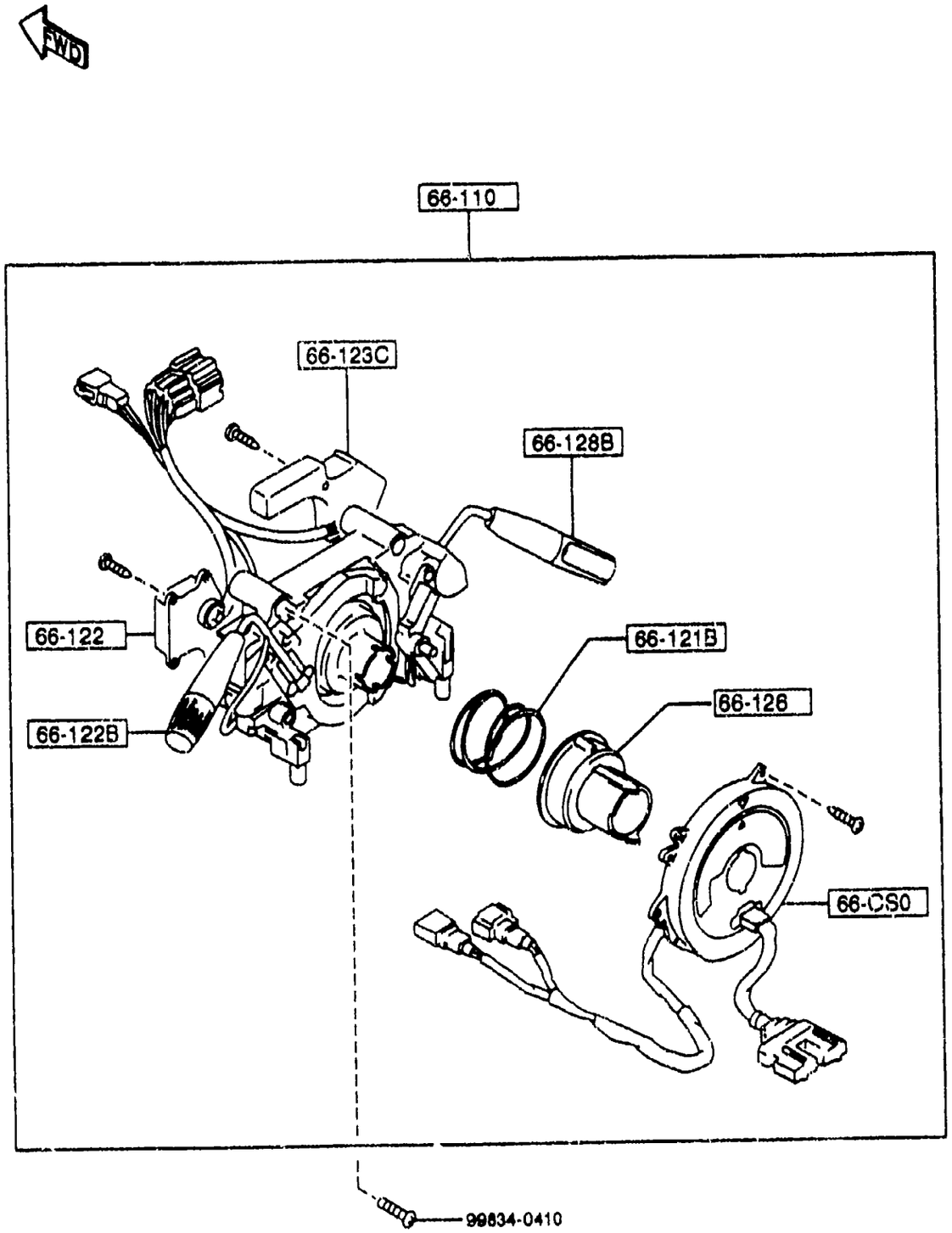

6611 -1 * COMBINATION SWITCH

PART NO.	QTY	MODEL/RESTRICTION	MODEL/RESTRICTION	MODEL/RESTRICTION	FROM-TO
+---------+ | 66-CS0 | +---------+		SPRING,CLOCK			
NB17-66-CS0	1				-7801
A (NB17-66-CS0A)					
*NB17-66-CS0A	1				7801-
+---------+ | 66-110 | +---------+		SWITCH,COMBINATION			
NB17-66-120	1	BASE, N-PKG, R-PKG, (W/O AUTO CRUISE.CON T.)			-7801
A (NB17-66-120A)					
NB18-66-120	1	P.E.GR, L-PKG, (W/AUTO CRUISE.CONT.)			-7801
A (NB18-66-120A)					
*NB17-66-120A	1	BASE, N-PKG, R-PKG, (W/O AUTO CRUISE.CON T.)			7801-
*NB18-66-120A	1	P.E.GR, L-PKG, (W/AUTO CRUISE.CONT.)			7801-
+---------+ | 66-121B | +---------+		SPRING,CANCEL CAM			
H384-66-121	1				
+---------+ | 66-122 | +---------+		SWITCH,DIMMER			
NA02-66-136	1				
+---------+ | 66-122B | +---------+		SWITCH,LIGHT & TURN			
NA02-66-122	1				
+---------+ | 66-123C | +---------+		UNIT,WIPER-COMB. SWI TCH			
NA02-66-135	1				
+---------+ | 66-126 | +---------+		CAM,CANCEL-COMB. SW.			
NA02-66-126	1				
+---------+ | 66-128B | +---------+		LEVER,WIPER-COMB. SW ITCH			
NA01-66-128	1	BASE, N-PKG, R-PKG, (W/O AUTO CRUISE.CON T.)			
NA02-66-128	1	P.E.GR, L-PKG, (W/AUTO CRUISE.CONT.)			

7801 NA35*V-739024

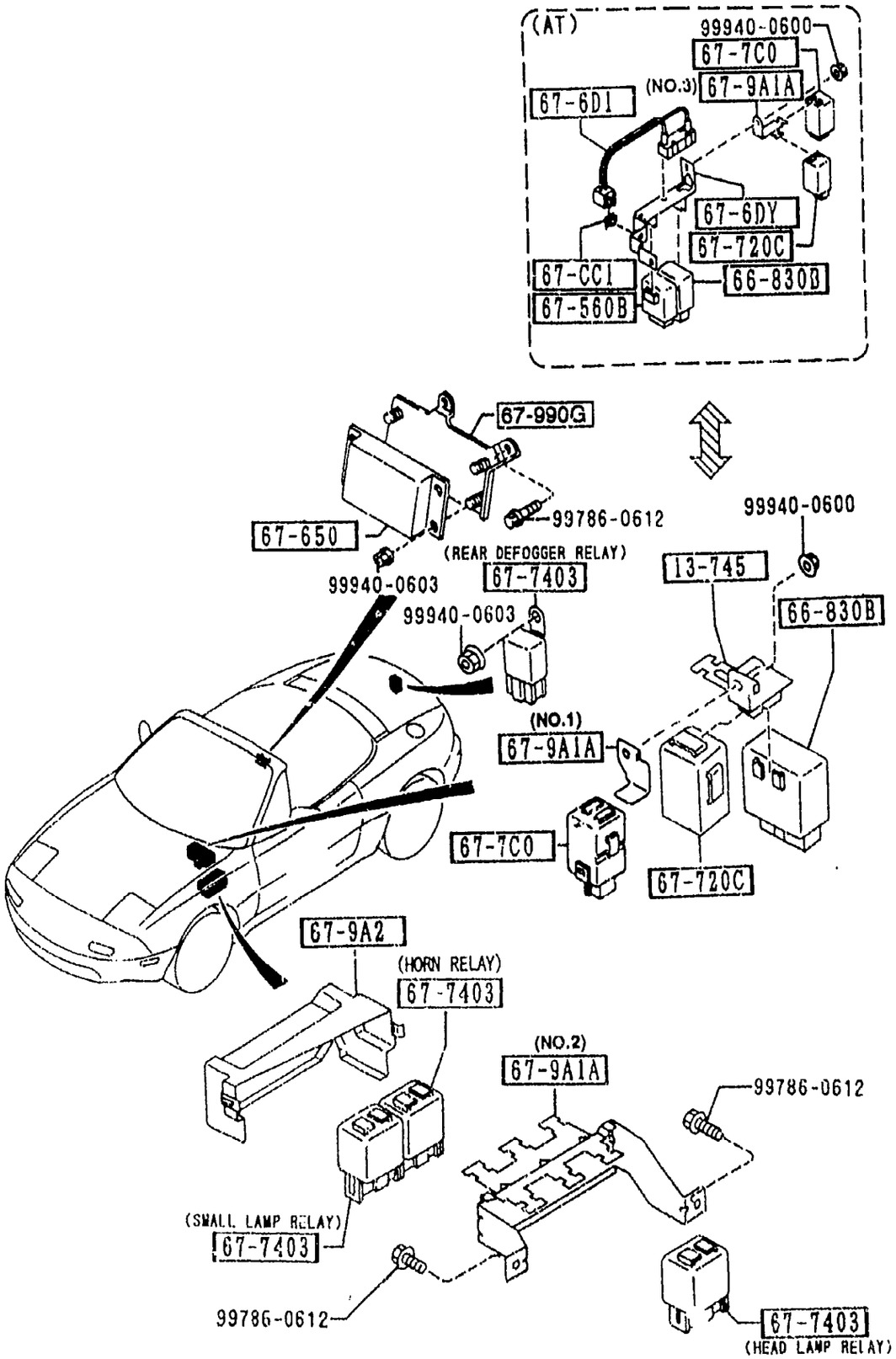

6630 -1 BODY RELAYS & UNIT

PART NO.	QTY	MODEL/RESTRICTION	MODEL/RESTRICTION	MODEL/RESTRICTION	FROM-TO
13-745		BRACKET,RELAY			
NA02-67-9A1	1	(MT)			
66-830B		UNIT,FLASHER			
HE01-66-830	1				
67-CC1		CLIP,HARNESS			
LA01-67-C11	1	(AT)			
67-560B		UNIT,CENTRAL PROCESS ING			
NA56-67-560	1	(AT)			
67-6DY		BRACKET,RELAY-INTERL OCK			
NA56-67-6DYA	1	(AT)			
67-6D1		RESISTOR,INTERLOCK			
M020-67-6D1	1	(AT)			
67-650		BOX,CONTROL-A.B.S.			
N036-67-650	1	(W/A. LOCK BRAKE)			-6B01
NB84-67-650	1	(W/A. LOCK BRAKE)			6B01-
67-7C0		RELAY,RETRACTOR-CO PANEL			
B481-67-7C0B	1				
67-720C		TIMER & BUZZER			
NA02-67-720A	1				
67-7403		RELAY,N.O.			
H300-67-740	1	30A (HEAD LAMP RELAY)			
LA10-67-740	2	10A (HORN RELAY) (SMALL LAMP RELAY)			
LA40-67-740	1	(REAR DEFOGGER RELAY) (W/DETACHABLE HARD T OP)			
67-9A1A		BRACKET,RELAY			
NA17-67-9A1	1	(ILLUST. NO.1) (MT)			
NA75-67-9A1	1	(ILLUST. NO.2)			

6B01 NA35*V-723096

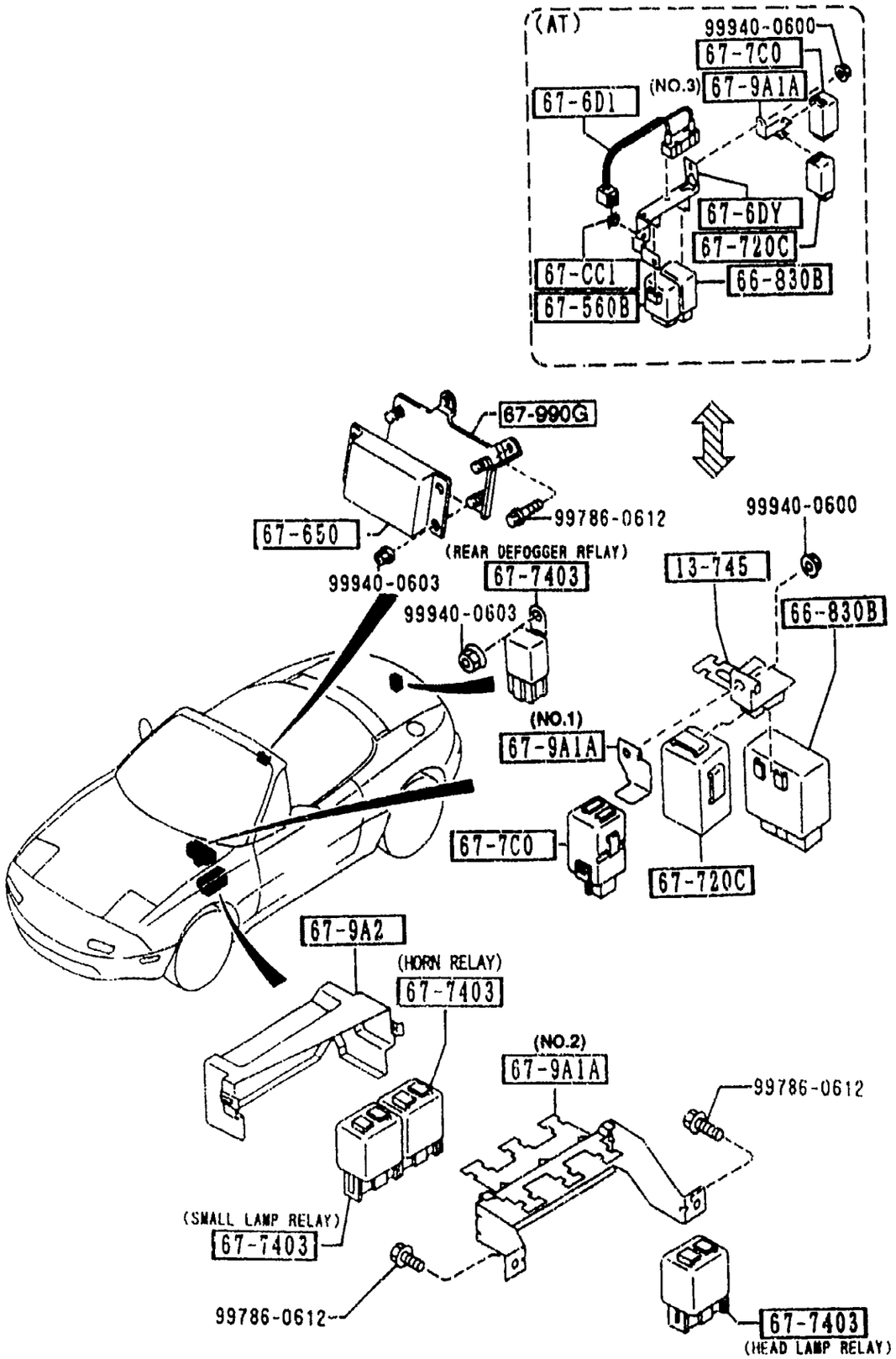

6630 -2 * BODY RELAYS & UNIT

PART NO.	QTY	MODEL/RESTRICTION	MODEL/RESTRICTION	MODEL/RESTRICTION	FROM-TO
CONT'D					
NA81-67-9A1	1	(ILLUST. NO.3) (AT)			
67-9A2		COVER,RELAY			
NA02-67-9A2	1				
67-990G		BRACKET,A.B.S.			
*NB13-67-B4X	1	(W/A. LOCK BRAKE)			

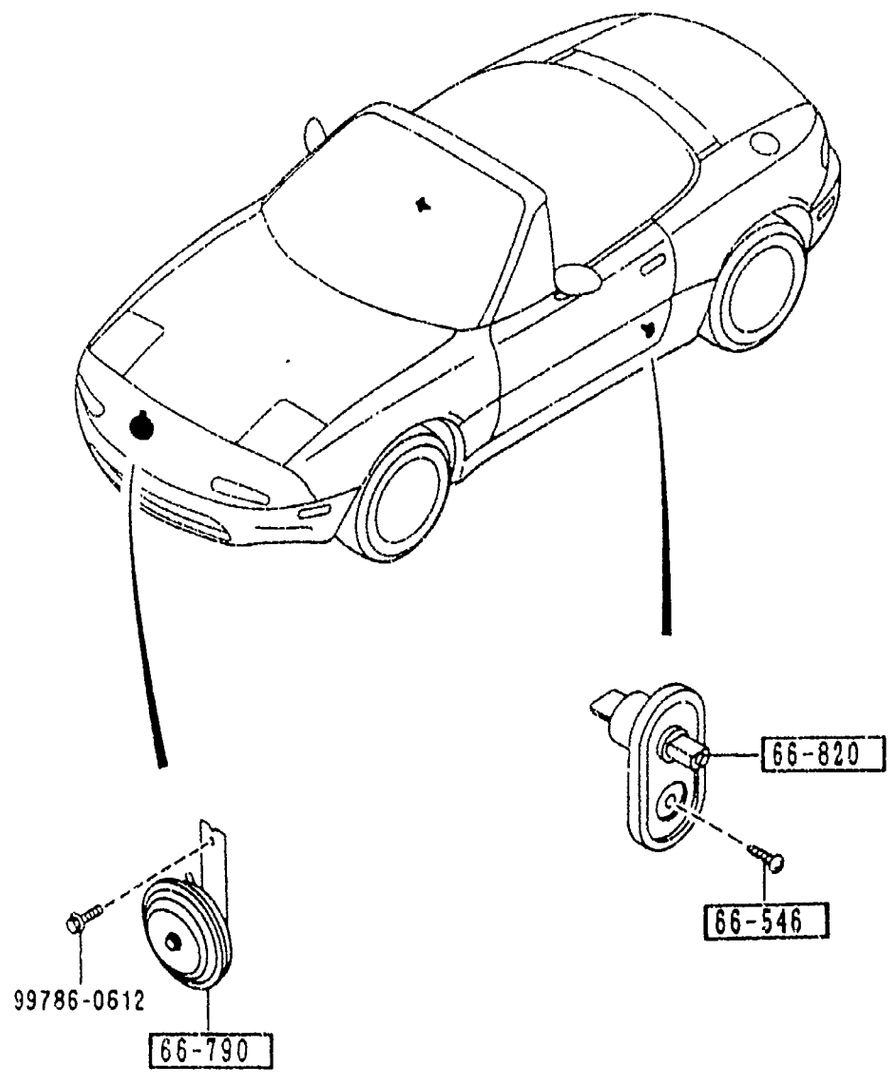

6635 -1 * DOOR SWITCH & HORNS

PART NO	QTY	MODEL/RESTRICTION	MODEL/RESTRICTION	MODEL/RESTRICTION	FROM-TO
66-546		SCREW,DOOR SWITCH			
LA01-66-546	2				
66-790		HORN,LOW TONE			
SA59-66-790A	1				
66-820		SWITCH,DOOR			
B455-66-[illegible]40	2				

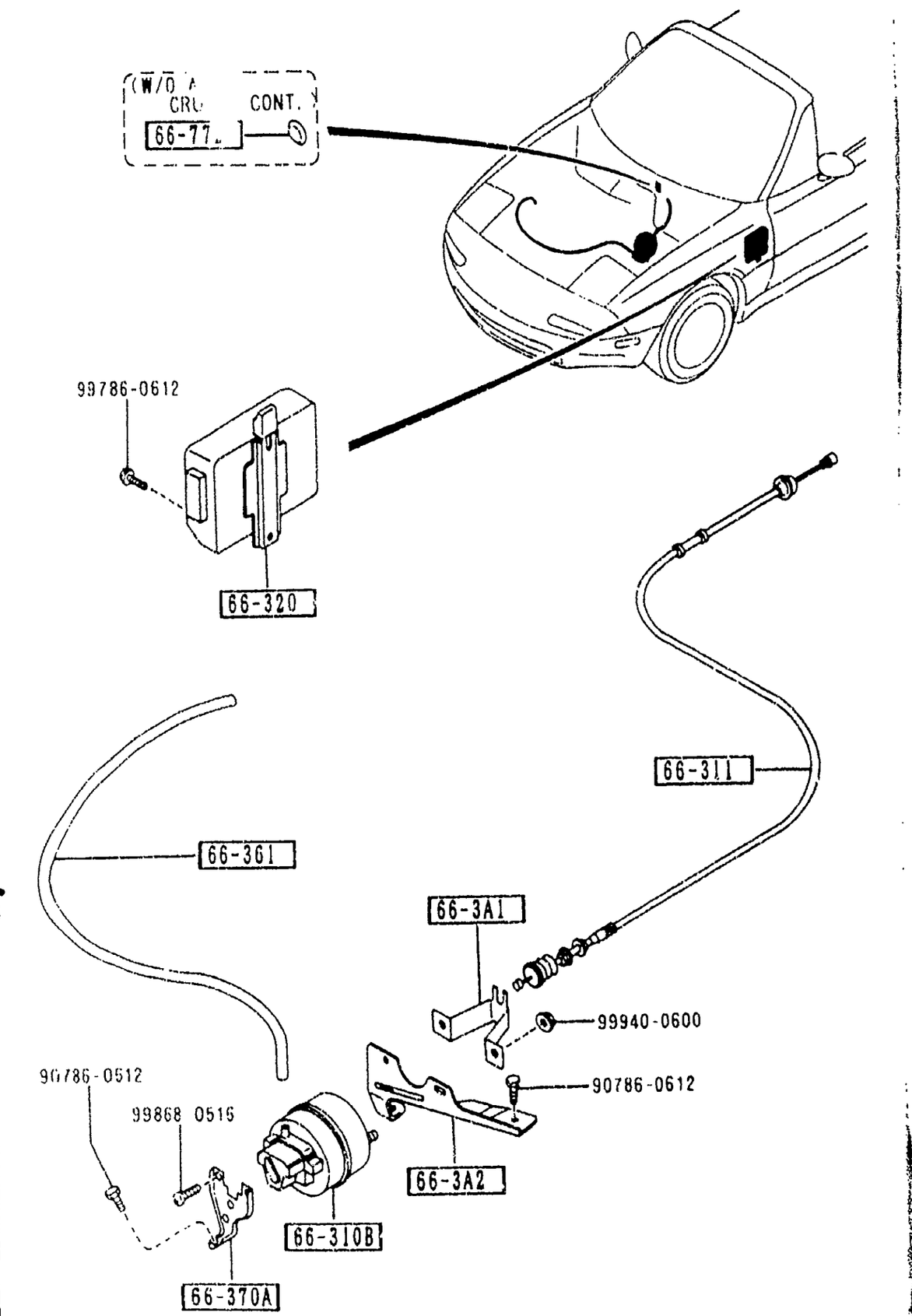

AUNA06

6640 -1 * AUTO CRUISE CONTROL SYSTEM

PART NO	QTY	MODEL/RESTRICTION	MODEL/RESTRICTION	MODEL/RESTRICTION	FROM-TO
66-3A1 LA01-66-3A1	1	BRACKET,ACTUATOR-A.C.C. P.E.GR, L-PKG, (W/AUTO CRUISE.CONT.)			
66-3A2 NA01-66-3A2A	1	BRACKET,ACTUATOR-FRONT P.E.GR, L-PKG, (W/AUTO CRUISE.CONT.)			
66-310B LA01-66-310A	1	ACTUATOR,A.C.C. P.E.GR, L-PKG, (W/AUTO CRUISE.CONT.)			
66-311 NA01-66-311A	1	WIRE,A.C.C. P.E.GR, L-PKG, (W/AUTO CRUISE.CONT.)			
66-320 NA01-66-320	1	BOX,A.C.C. P.E.GR, L-PKG, (W/AUTO CRUISE.CONT.)			
66-361 NA75-66-361	1	PIPE,AUTO CRUISE CONTROL P.E.GR, L-PKG, (W/AUTO CRUISE.CONT.)			
66-370A NA01-66-3A3A	1	BRACKET,ACTUATOR P.E.GR, L-PKG, (W/AUTO CRUISE.CONT.)			
66-772 B092-41-661	1	GROMMET BASE, N-PKG, R-PKG, (W/O AUTO CRUISE.CONT.)			

CAT. AUNA06-03

1998-07

(W/O AUDIO)

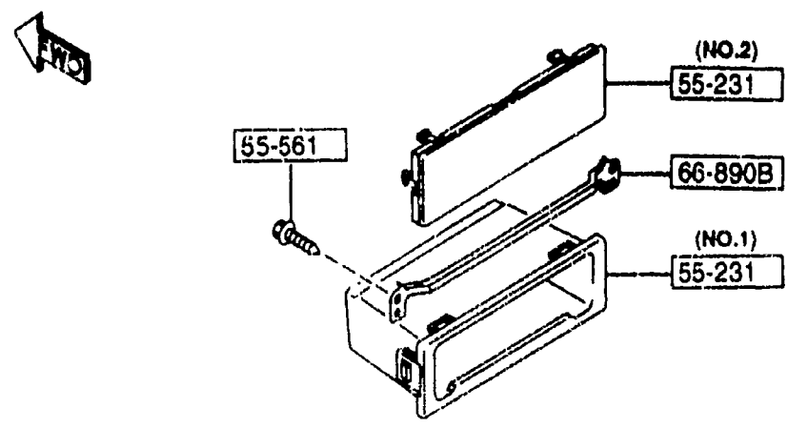

(AM/FM, W/O C.DISC)

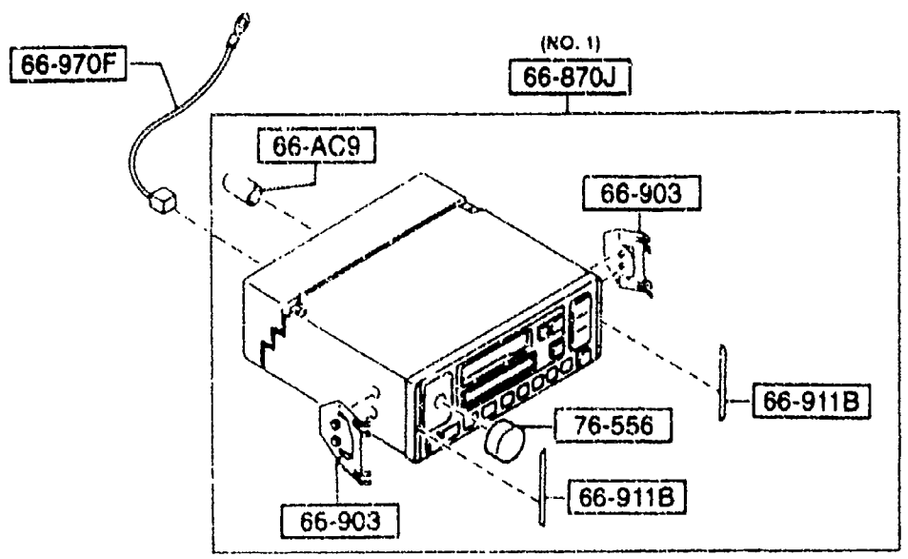

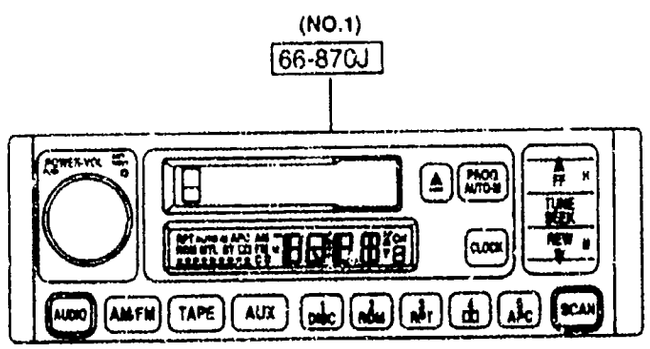

(AM/FM, W/C.DISC)

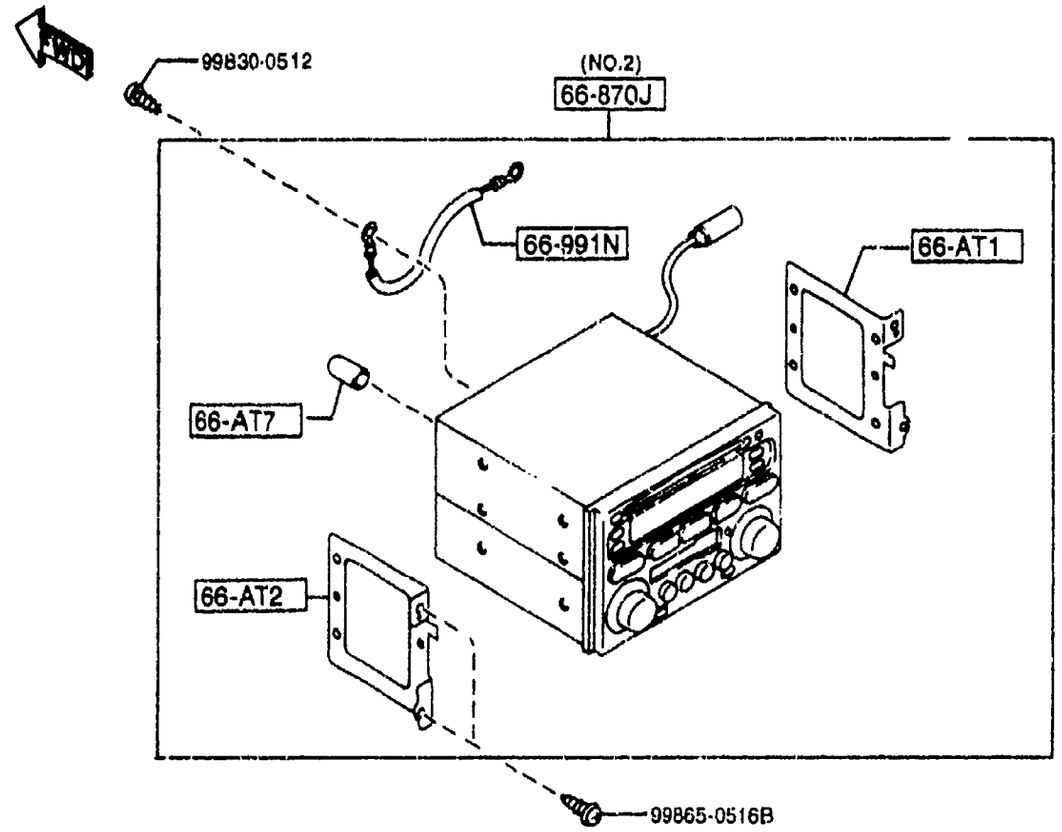

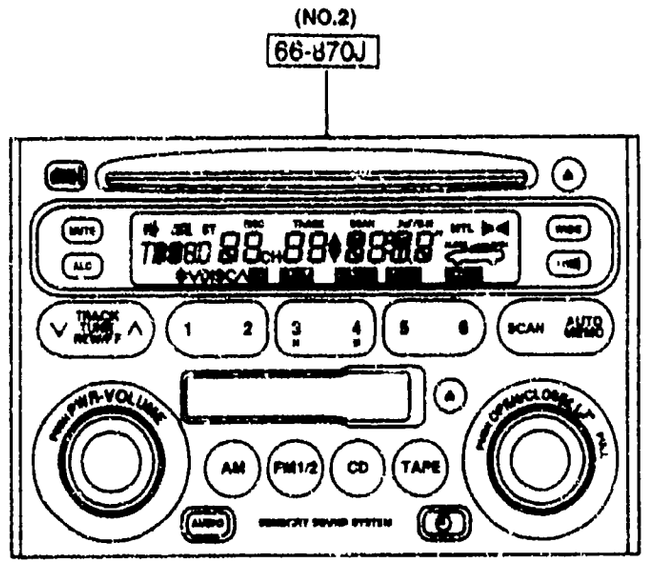

(W/O AUDIO)

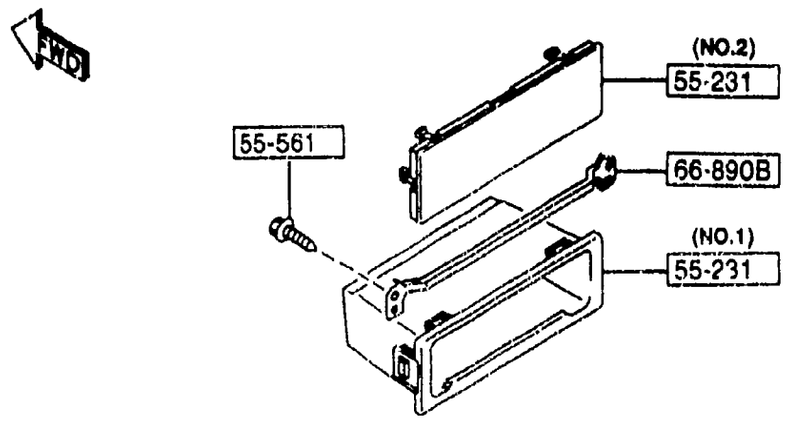

(AM/FM, W/O C.DISC)

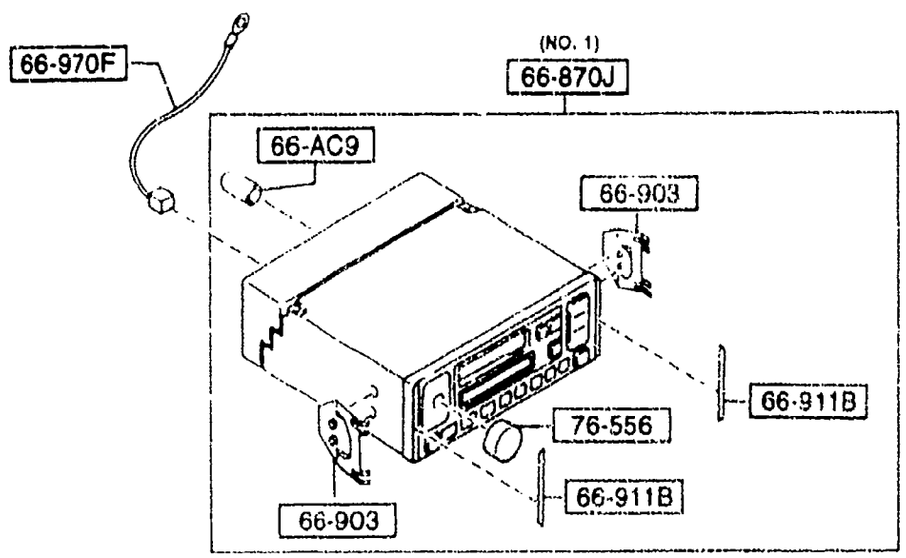

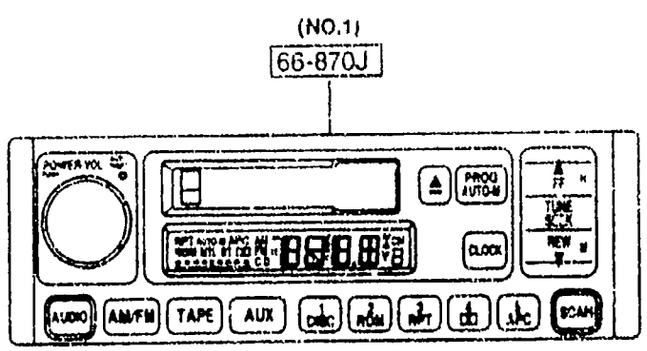

6680 -1 AUDIO SYSTEMS (RADIO & TAPE DECK)

PART NO	QTY	MODEL/RESTRICTION	MODEL/RESTRICTION	MODEL/RESTRICTION	FROM-TO
55-231		ORNAMENT,STEREO			
B02A-66-9M0A	1	(ILLUST. NO.1) (AM/FM,W/O C.DISC) (W/O AUDIO)			
B03A-66-9M0	1	(ILLUST. NO.2) (W/O AUDIO)			
55-561		BOLT,INST. PANEL			
B455-55-561	2	(W/O AUDIO) (AM/FM,W/O C.DISC)			
66-AC9		RUBBER,REAR-ET/ED CO MBI.			
LB84-66-AC9	1	PANASONIC (AM/FM,W/O C.DISC)			
66-AT1		BRACKET(R),FRONT-AUD TO			
N034-66-AS1	1	(AM/FM,W/C.DISC)			
66-AT2		BRACKET(L),FRONT-AUD TO			
N034-66-AS2	1	(AM/FM,W/C.DISC)			
66-AT7		BRACKET(RR),AUDIO			
NB41-66-AS3	1	(AM/FM,W/C.DISC)			
66-870J		AUDIO SET			
NB40-66-9C0	1	(ILLUST. NO.1) (AM/FM,W/O C.DISC)			
NB41-66-9C0	1	(ILLUST. NO.2) (AM/FM,W/C DISC)			
66-890B		BRACKET			
NB38-66-9B1	1	(W/O AUDIO) (AM/FM,W/O C.DISC)			
66-903		BRACKET,TUNER			
FD04-66-AW1	2	PANASONIC (AM/FM,W/O C.DISC)			
66-911B		COVER,HOLE			
NB40-66-BC4	2	PANASONIC (AM/FM,W/O C.DISC)			
66-970F		CORD,EARTH			
NB38-66-997	1	(W/O AUDIO) (AM/FM,W/O C.DISC)			

(AM/FM,W/C.DISC)

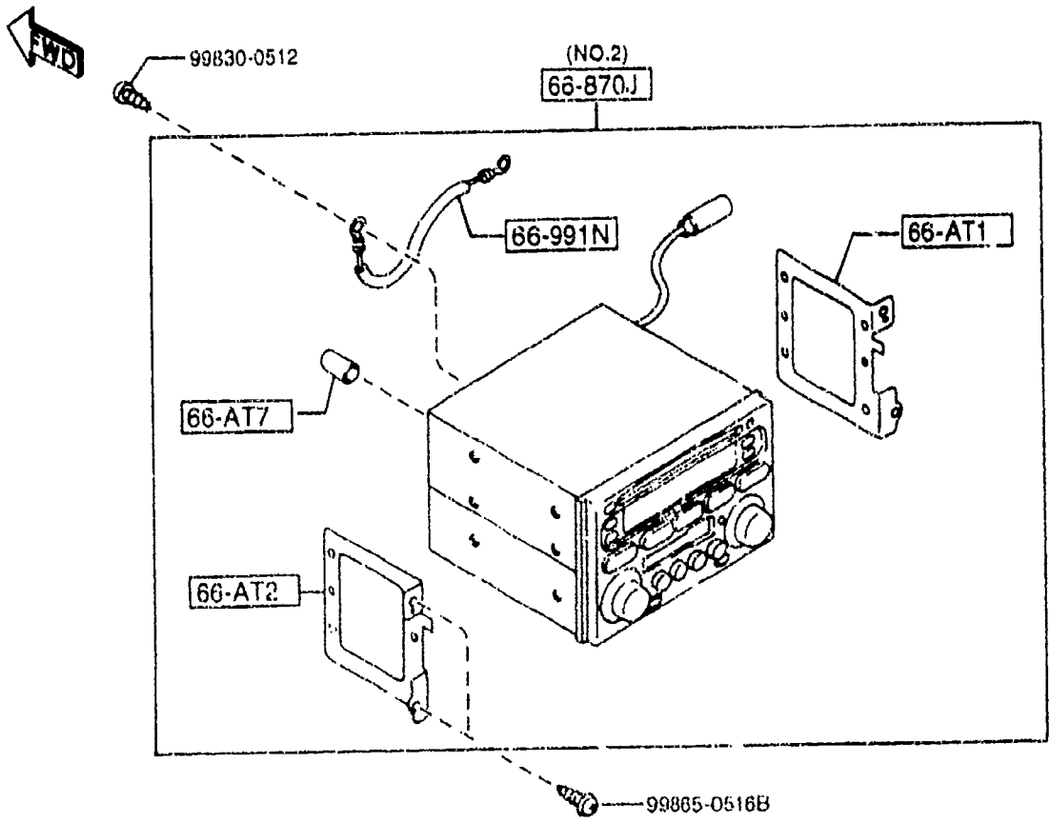

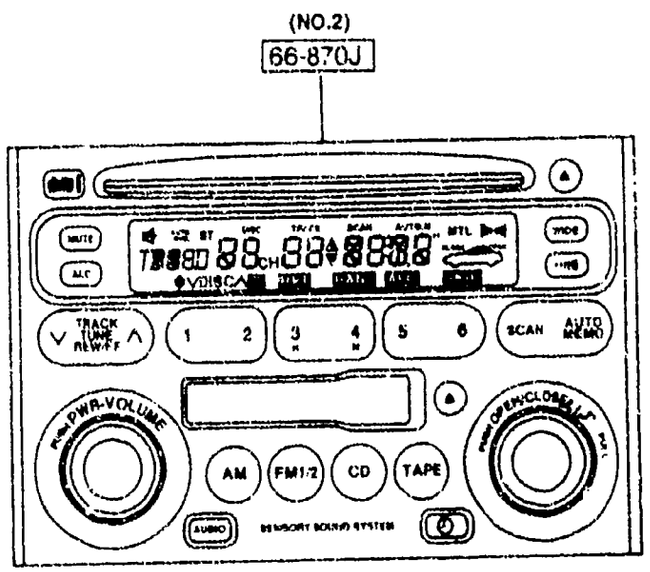

6680 -2 * AUDIO SYSTEMS (RADIO & TAPE DECK)

PART NO	QTY	MODEL/RESTRICTION	MODEL/RESTRICTION	MODEL/RESTRICTION	FROM-TO
+----------+					
| 66-991N |		CORD,EARTH			
+----------+					
N018-66-997	1	(AM/FM,W/C.DISC)			
+----------+					
| 76-556 |		KNOB,VOLUME			
+----------+					
NB40-66-BC1	1	(AM/FM,W/O C.DISC)			-6B01
AN(TB48-66-BC1)					
TB48-66-BC1	1	(AM/FM,W/O C.DISC)			6B01-

6B01 NA35*V-723096

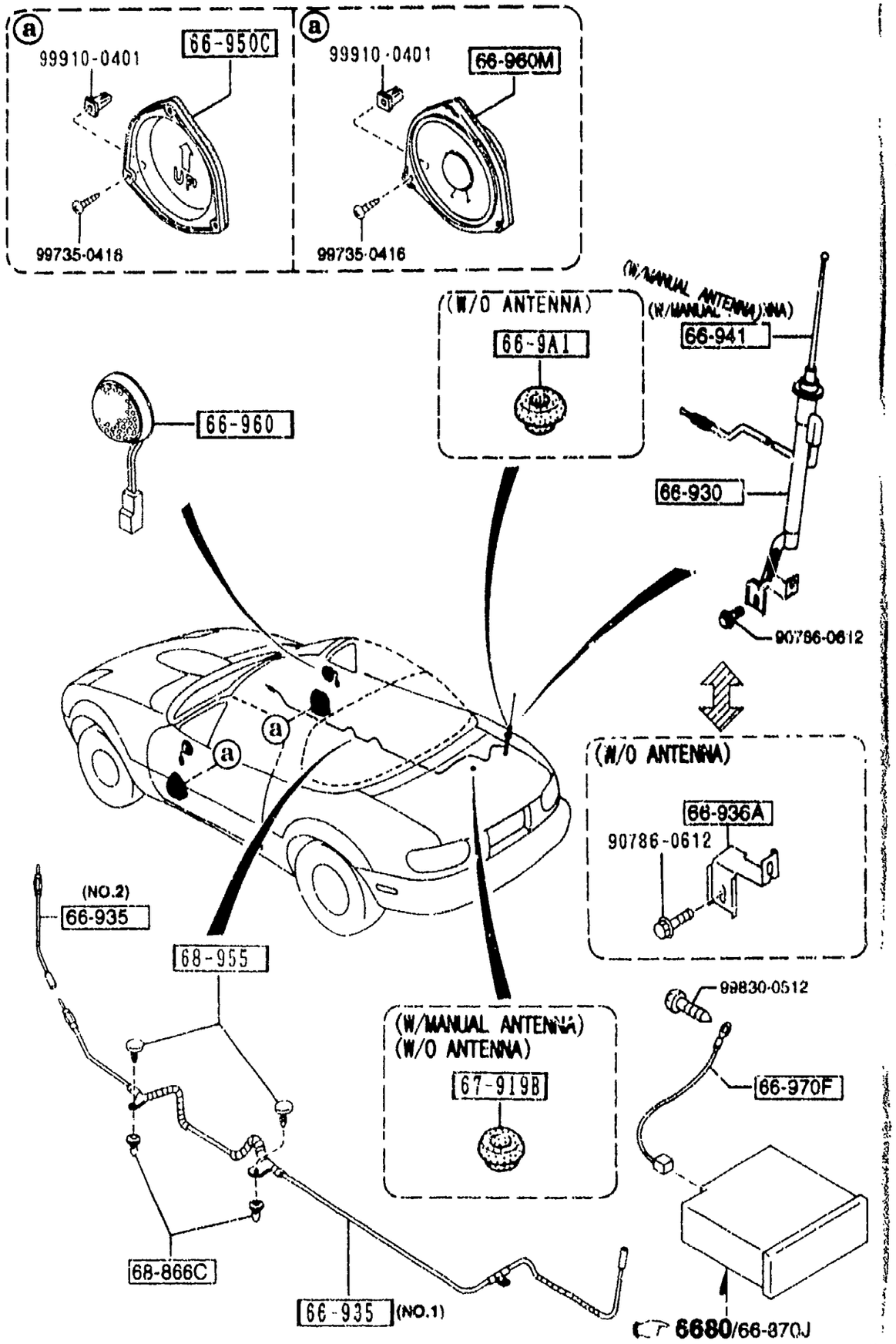

AUNA06

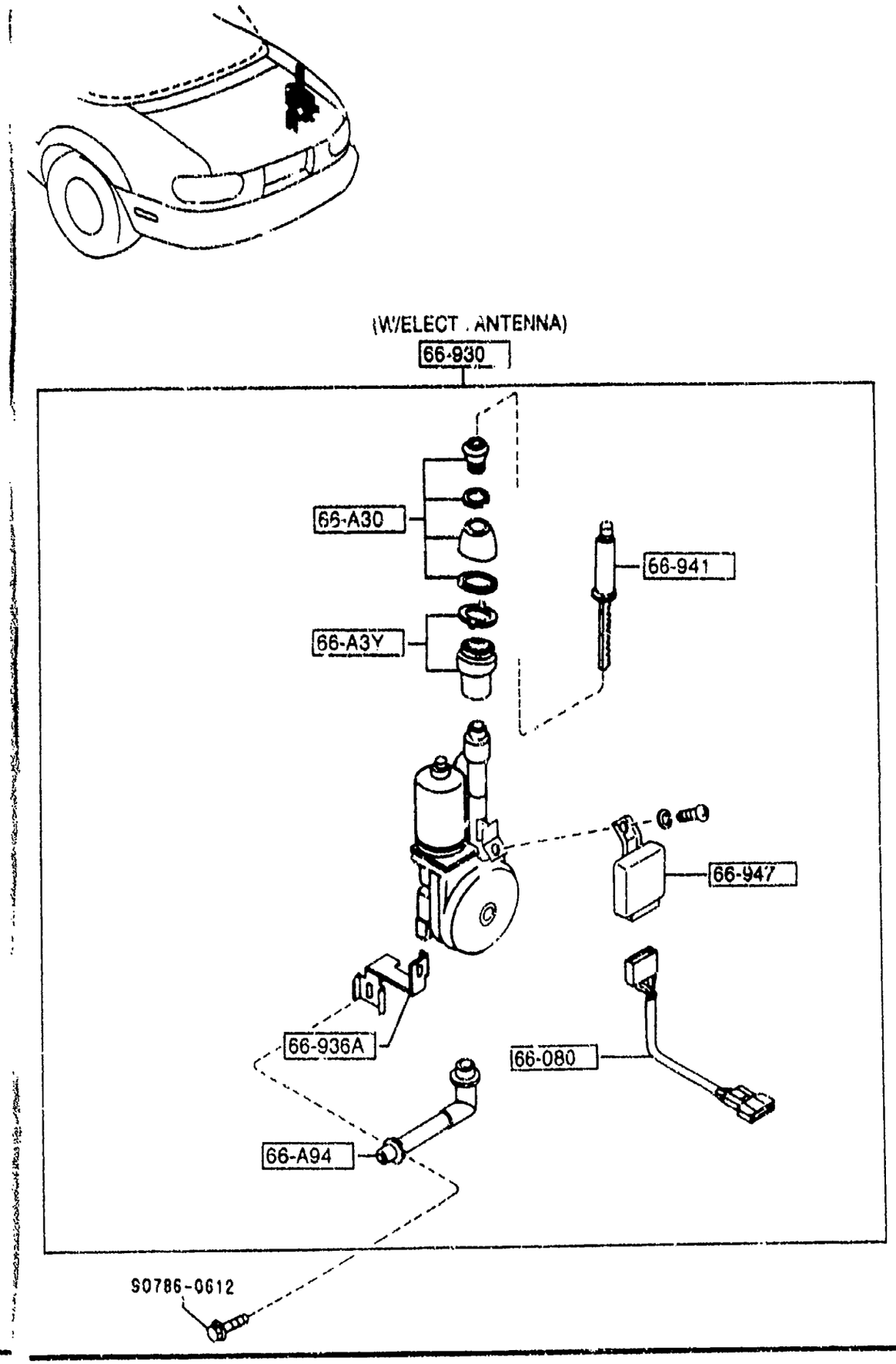

AUNA06

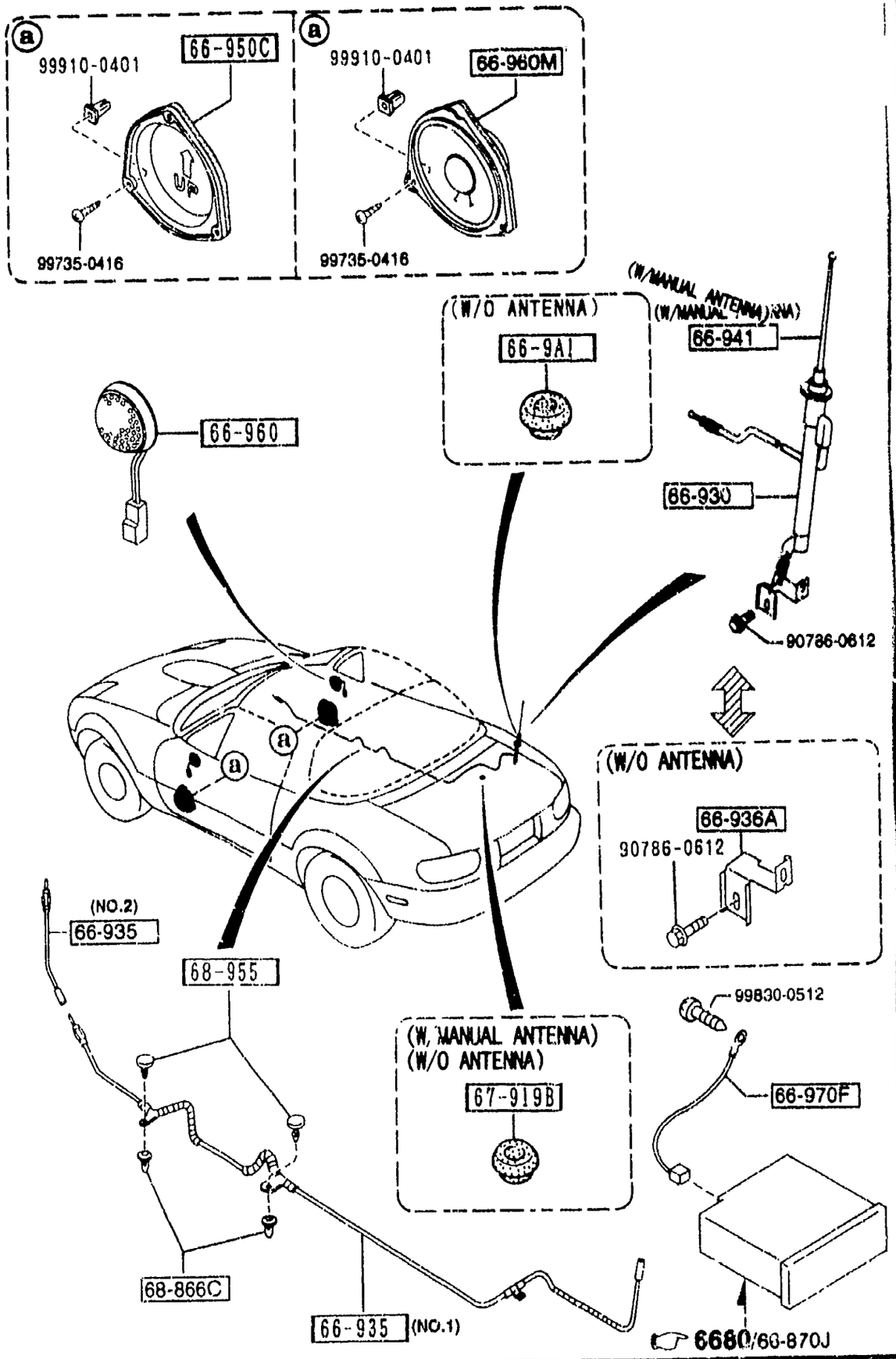

PART NO	QTY	MODEL/RESTRICTION	MODEL/RESTRICTION	MODEL/RESTRICTION	FROM-TO
66-A3Y		PLATE,EARTH-MOTOR ANTENNA			
N007-66-A3Z	1	P.E.GR, L-PKG, (W/ELECT.ANTENNA)			
66-A30		NUT,MOUNTING-ANTENNA			
N007-66-A9Y	1	P.E.GR, L-PKG, (W/ELECT.ANTENNA)			
66-A94		PIPE,DRAIN-ANTENNA			
N007-66-A90	1	P.E.GR, L-PKG, (W/ELECT.ANTENNA)			
66-080		CORD			
N007-66-D10	1	P.E.GR, L-PKG, (W/ELECT.ANTENNA)			
66-9A1		COVER,HOLE-ANTENNA			
FB01-66-9A1A	1	(W/O ANTENNA)			
66-930		ANTENNA,RADIO			
N007-66-930A	1	P.E.GR, L-PKG, (W/ELECT.ANTENNA)			
N034-66-930	1	BASE, F-SV, R-PKG, T-PKG, (W/MANUAL ANTENNA)			
66-935		FEEDER-ANTENNA			
NA01-66-940C	1	(ILLUST. NO.1)			
NB40-66-940	1	(ILLUST. NO.2) (AM/FM,W/O C.DISC)			
66-936A		BRKT,MOTOR-ANTENNA			
N007-66-A9X	1	P.E.GR, L-PKG, (W/ELECT.ANTENNA) (W/O ANTENNA)			
66-941		POLE,ANTENNA			
N007-66-A3X	1	P.E.GR, L-PKG, (W/ELECT.ANTENNA)			
KA03-66-930A	1	BASE, F-SV, R-PKG, T-PKG, (W/MANUAL ANTENNA)			
66-947		RELAY,ANTENNA			
*N007-66-A3V	1	P.E.GR, L-PKG, (W/ELECT.ANTENNA)			7801-

7801 NA35*V-739024

6682 AUDIO SYSTEMS (ANTENNA & SPEAKER) (2/2)

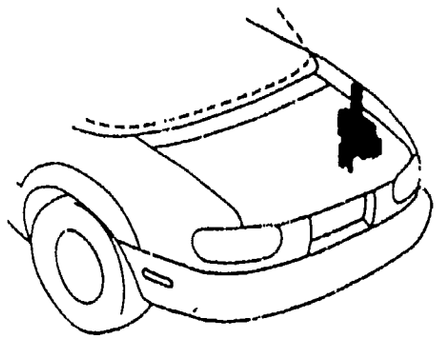

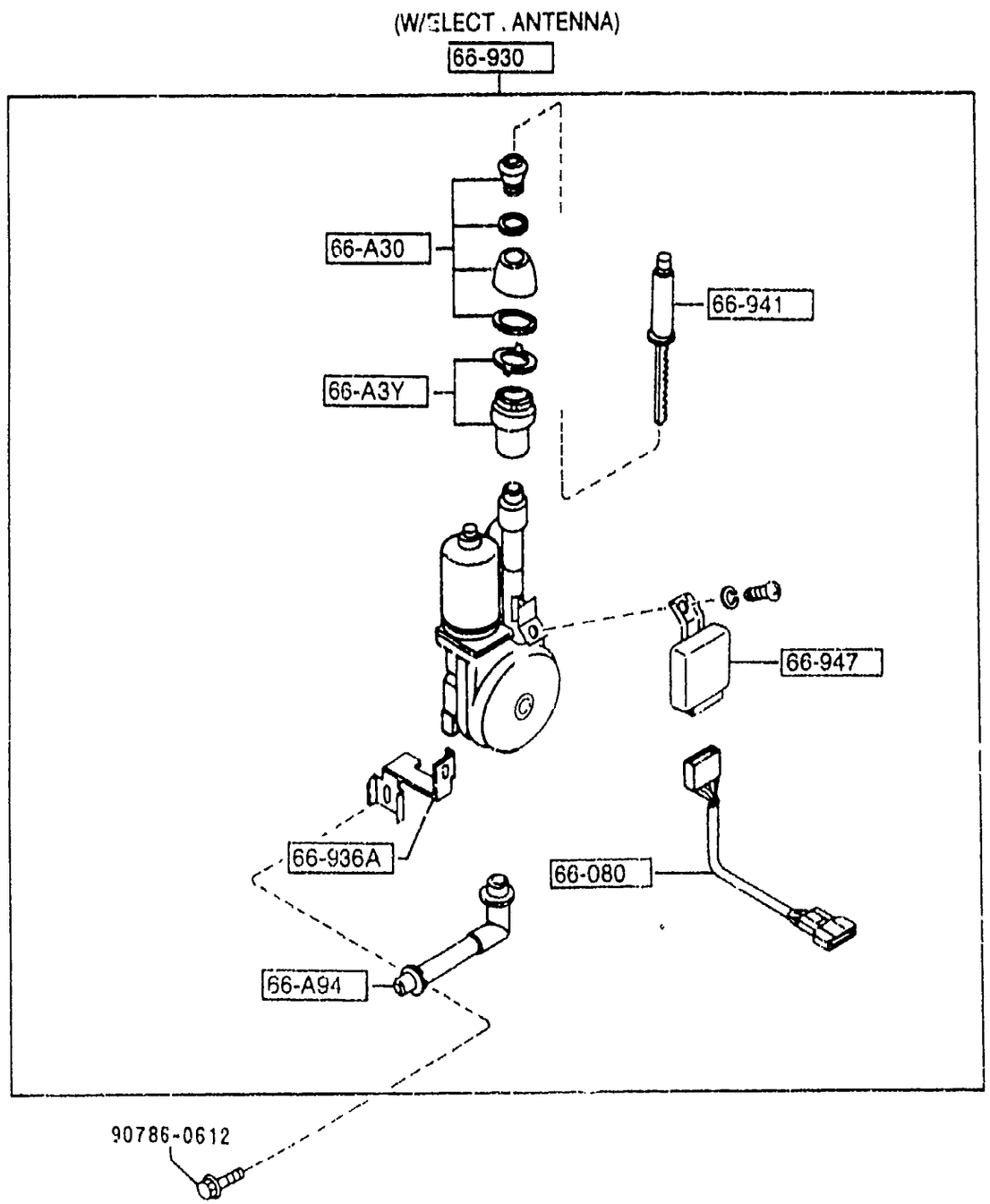

PART NO.	QTY	MODEL/RESTRICTION	MODEL/RESTRICTION	MODEL/RESTRICTION	FROM-TO
66-950C		BRACKET,LOUD SPEAKER			
NA01-66-9B0A	2	(W/O AUDIO)			
66-960		SPEAKER,LOUD-FRONT			
NB42-66-960	2	(AM/FM,W/C.DISC)			
66-960M		SPEAKER,LOUD-DOOR			
B02T-66-960	2	(AM/FM,W/O C.DISC)			
N034-66-960	2	(AM/FM,W/C.DISC)			
66-970F		CORD,EARTH			
NB38-66-997	1	(W/O AUDIO) (AM/FM,W/O C.DISC)			
67-919B		GROMMET			
N007-67-G11	1	BASE, , -SV, R-PKG, T-PKG, (W/MANUAL ANTENNA) (W/O ANTENNA)			
68-866C		FASTENER,SEAL			
B235-68-865A	2				
68-955		FASTENER,LIFT GATE TRIM			
GJ37-68-955	2				
00	INT-	NA3 NA4 NA5 NA6 BLACK			

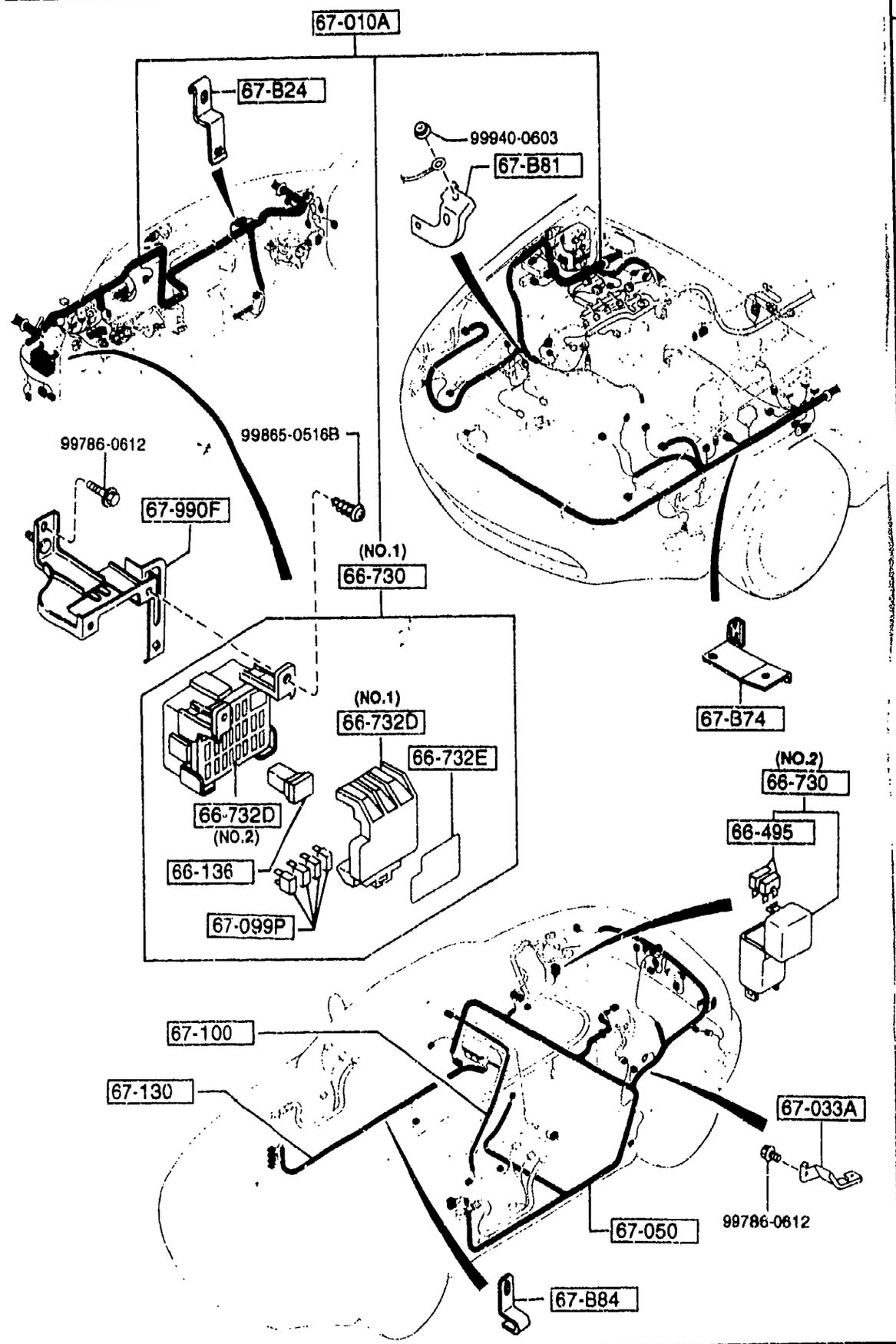

PART NO.	QTY	MODEL/RESTRICTION	MODEL/RESTRICTION	MODEL/RESTRICTION	FROM-TO
66-136		FUSE (30A)			
T001-67-S93	1				
66-495		FUSE (10A)			
99705-1110	2				
66-730		BLOCK,FUSE			
NB11-66-730	1	(ILLUST. NO.1)			
N008-66-730	1	(ILLUST. NO.2)			
66-732D		COVER,FUSE BLOCK			
NA01-66-731A	1	FURUKAWA (ILLUST. NO.1)			
NB11-66-731	1	(ILLUST. NO.2)			
66-732E		LABEL,CAUTION-FUSE COVER			
NB11-66-732	1				
67-B24		BRACKET			
NA75-67-B11A	1	(W/AIR BAG-DRIV.&PASS.SIDE)			
67-B74		BRACKET,HARNESS			
N018-67-BW0	1				
67-B81		BRACKET.HARNESS-ENGINE			
NA75-67-B81	1				
67-B84		BRACKET			
NA75-67-B12	1				
67-010A		HARNESS,FRONT			
NB38-67-010D	1	((MT)>(W/O A. LOCK BRAKE))			-6C01
NB40-67-010D	1	((MT)>(W/A. LOCK BRAKE))			-6C16
NB42-67-010D	1	((AT)>(W/O A. LOCK BRAKE))			-6C16
NB43-67-010D	1	((AT)>(W/A. LOCK BRAKE))			-6C16
NC29-67-010A	1	BASE, N-PKG, R-PKG, (W/O AUTO CRUISE.CONT.)			6C01-

6C01 NA35*V-725591
6C16 NA35*V-726785

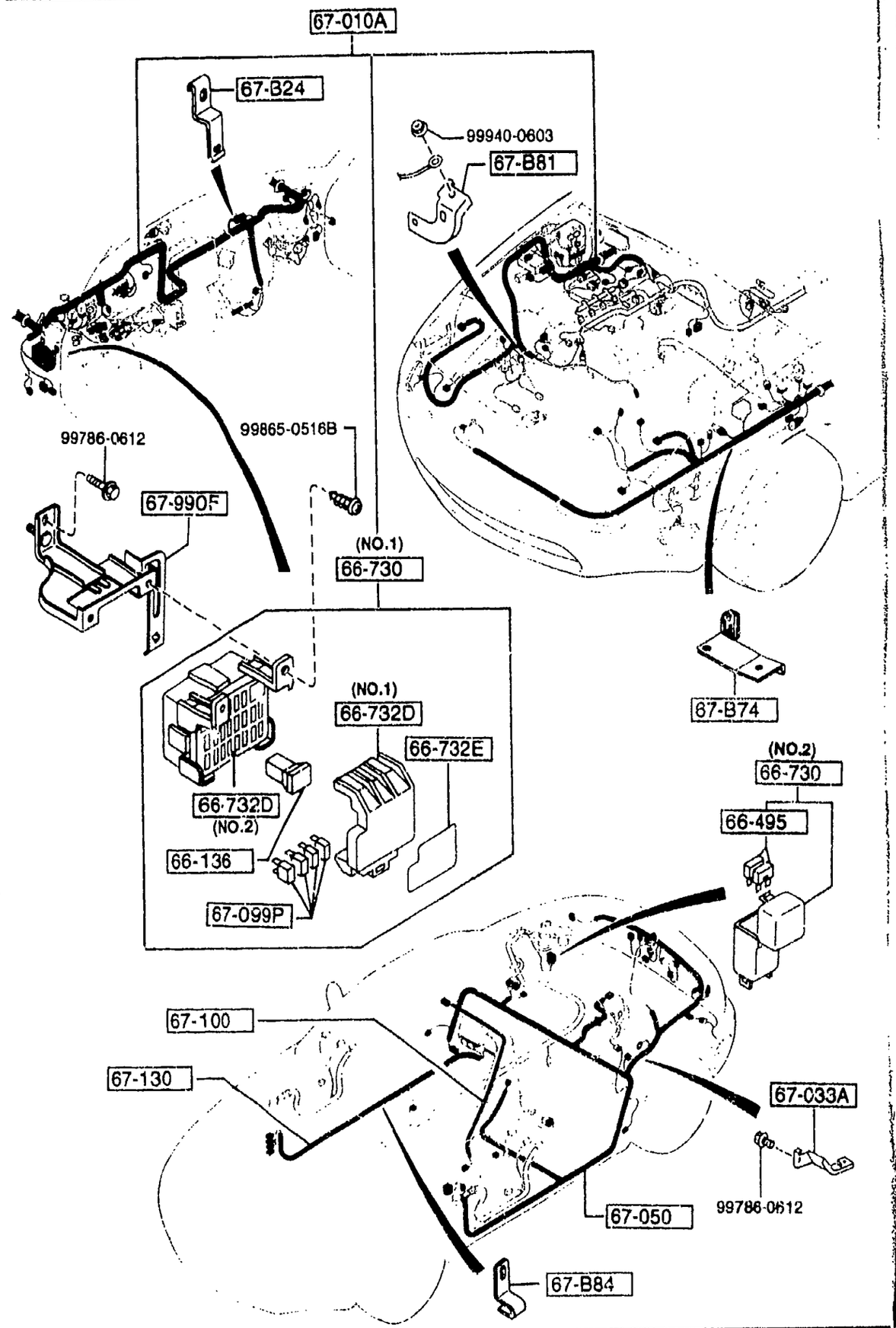

PART NO.	QTY	MODEL/RESTRICTION	MODEL/RESTRICTION	MODEL/RESTRICTION	FROM-TO
CONT'D					
		((MT)>(W/O A. LOCK BRAKE))			
NB38-67-010D	1	P.E.GR, L-PKG, (W/AUTO CRUISE.CONT.)			6C01-6C16
		((MT)>(W/O A. LOCK BRAKE))			
NB38-67-010E	1	P.E.GR, L-PKG, (W/AUTO CRUISE.CONT.)			6C16-
		((MT)>(W/O A. LOCK BRAKE))			
NB40-67-010E	1	((MT)>(W/A. LOCK BRAKE))			6C16-
NB42-67-010E	1	((AT)>(W/O A. LOCK BRAKE))			6C16-
NB43-67-010E	1	((AT)>(W/A. LOCK BRAKE))			6C16-
+---------+					
| 67-033A |		BRACKET,WIRING			
+---------+					
N007-67-B10A	1				
+---------+					
| 67-050 |		HARNESS,REAR			
+---------+					
NB84-67-050	1	(W/O A. LOCK BRAKE)			-6C01
NB86-67-050	1	(W/A. LOCK BRAKE)			-6C01
NB84-67-050B	1	(W/O A. LOCK BRAKE)			6C01-
NB86-67-050B	1	(W/A. LOCK BRAKE)			6C01-
+---------+					
| 67-099P |		FUSE			
+---------+					
99705-1210	1	10A			
99705-1215	6	15A			
99705-1220	1	20A			
99705-1230	1	30A			
+---------+					
| 67-100 |		HARNESS,ROOM LAMP			
+---------+					
NB38-67-100G	1				
+---------+					
| 67-130 |		HARNESS'NO.2',FRONT			
+---------+					
NB84-67-110	1	(W/O A. LOCK BRAKE)			
NB86-67-110	1	(W/A. LOCK BRAKE)			

6C01 NA35*V-725591
6C16 NA35*V-726785

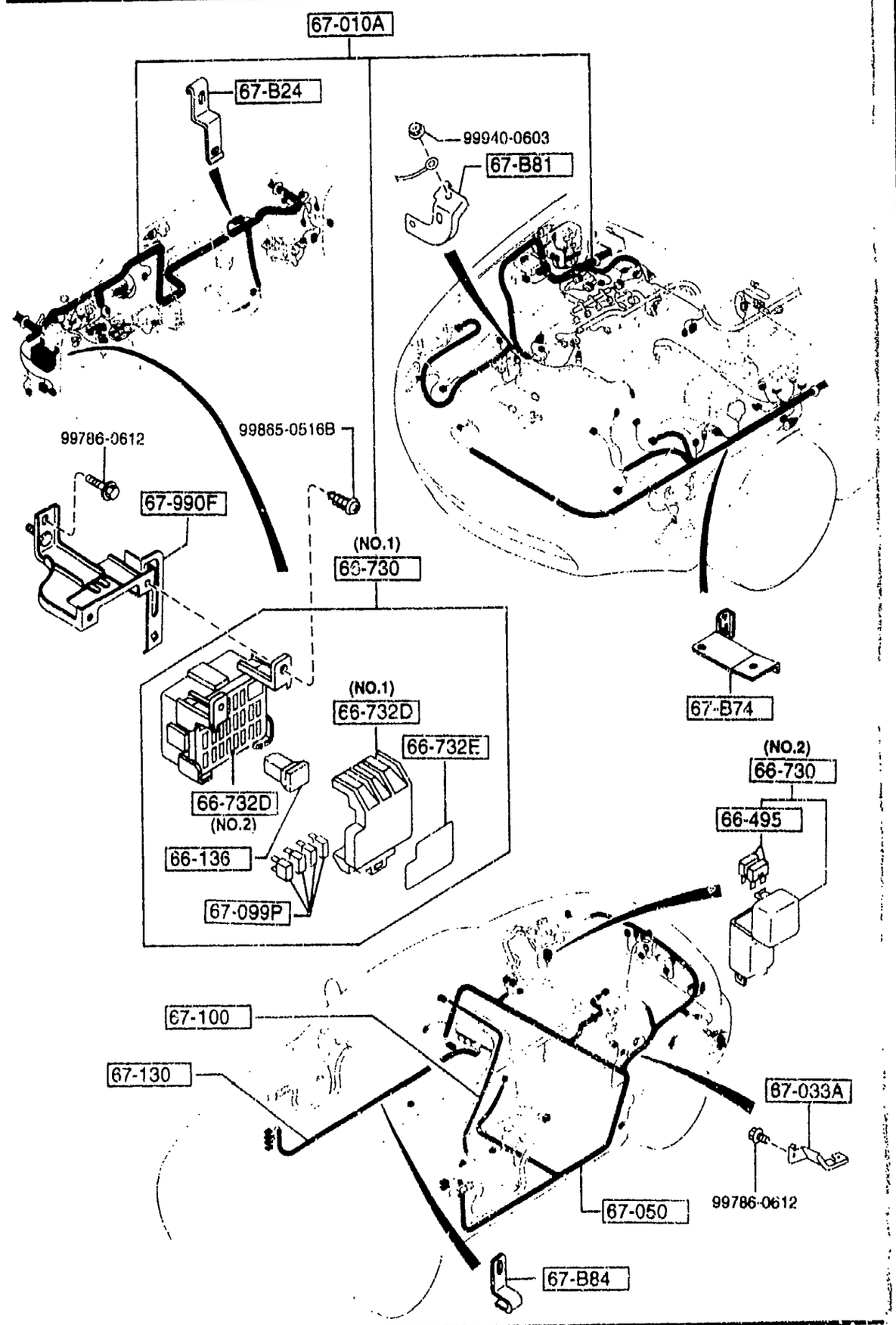

6700 -3 * FRONT & REAR WIRING HARNESSES

PART NO.	QTY	MODEL/RESTRICTION	MODEL/RESTRICTION	MODEL/RESTRICTION	FROM-TO
67-990F		BRACKET,HARNESS			
NA01-67-BJ0A	1				

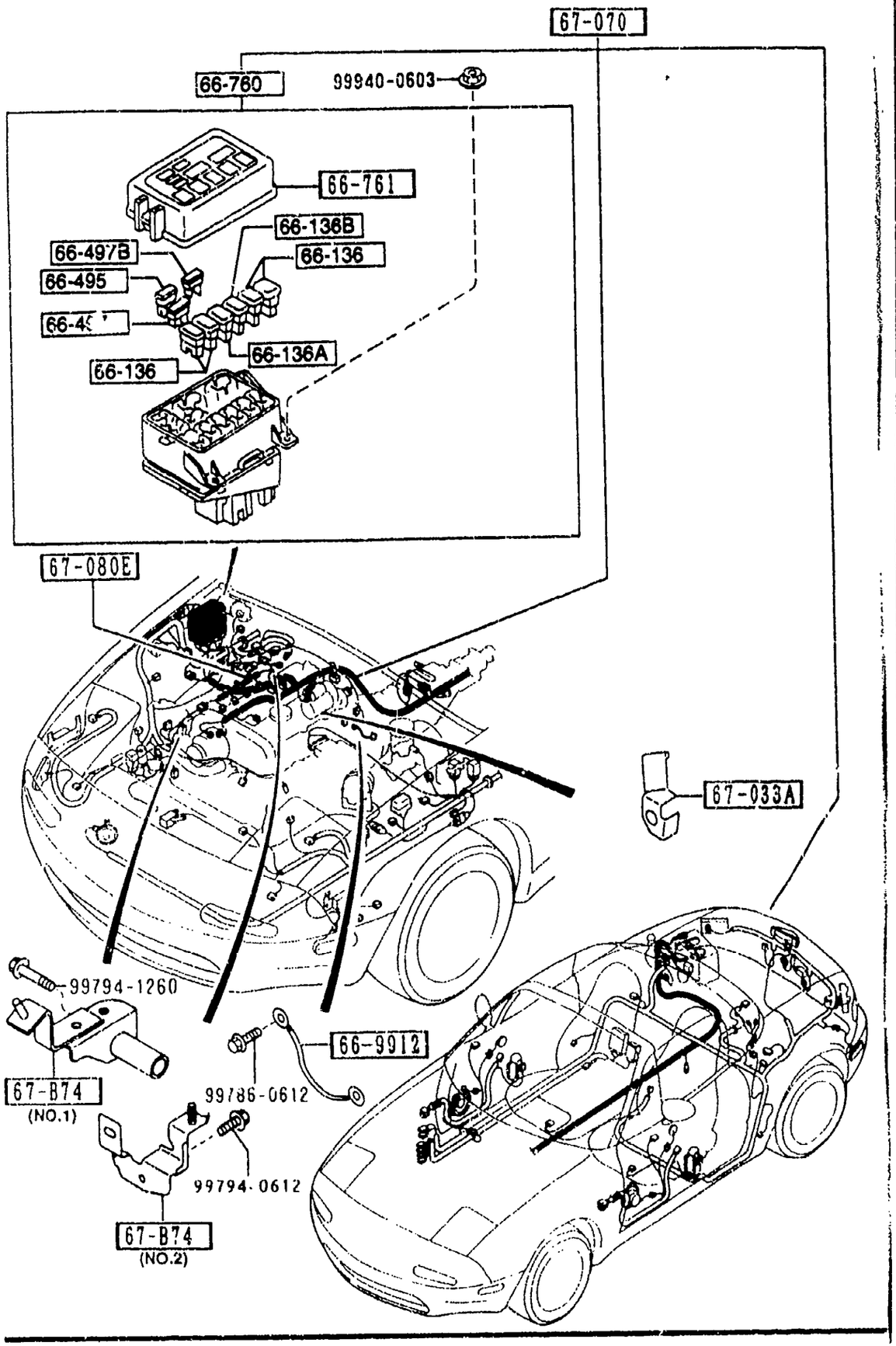

PART NO.	QTY	MODEL/RESTRICTION	MODEL/RESTRICTION	MODEL/RESTRICTION	FROM-TO
66-136		FUSE (30A)			
H115-67-099	4				
66-136A		FUSE (40A)			
H116-67-099	1	40A			
66-136B		FUSE (80A)			
H117-67-099	1				
66-495		FUSE (10A)			
99705-1110	1				
66-497		FUSE (20A)			
99705-1120	1				
66-497B		FUSE (30A)			
99705-1130	1				
66-760		BLOCK,MAIN FUSE			
NB11-66-760	1				
66-761		COVER,MAIN FUSE BLOCK			
NB11-66-762	1				
66-9912		WIRE,EARTH			
NA75-67-EW1B	1				
67-B74		BRACKET,HARNESS			
NA80-67-B80	1	(ILLUST. NO.1)			
NB84-67-B80	1	(ILLUST. NO.2)			
67-033A		BRACKET,WIRING			
NA01-67-B10B A (NA01-67-B10C)	1				-7701
*NA01-67-B10C	1				7701-
67-070		HARNESS,ENGINE			
NB11-67-070B	1	((MT)>(W/O A. LOCK BRAKE))			
NB12-67-070B	1	((MT)>(W/A. LOCK BRAKE))			

7701 NA35*V-738443

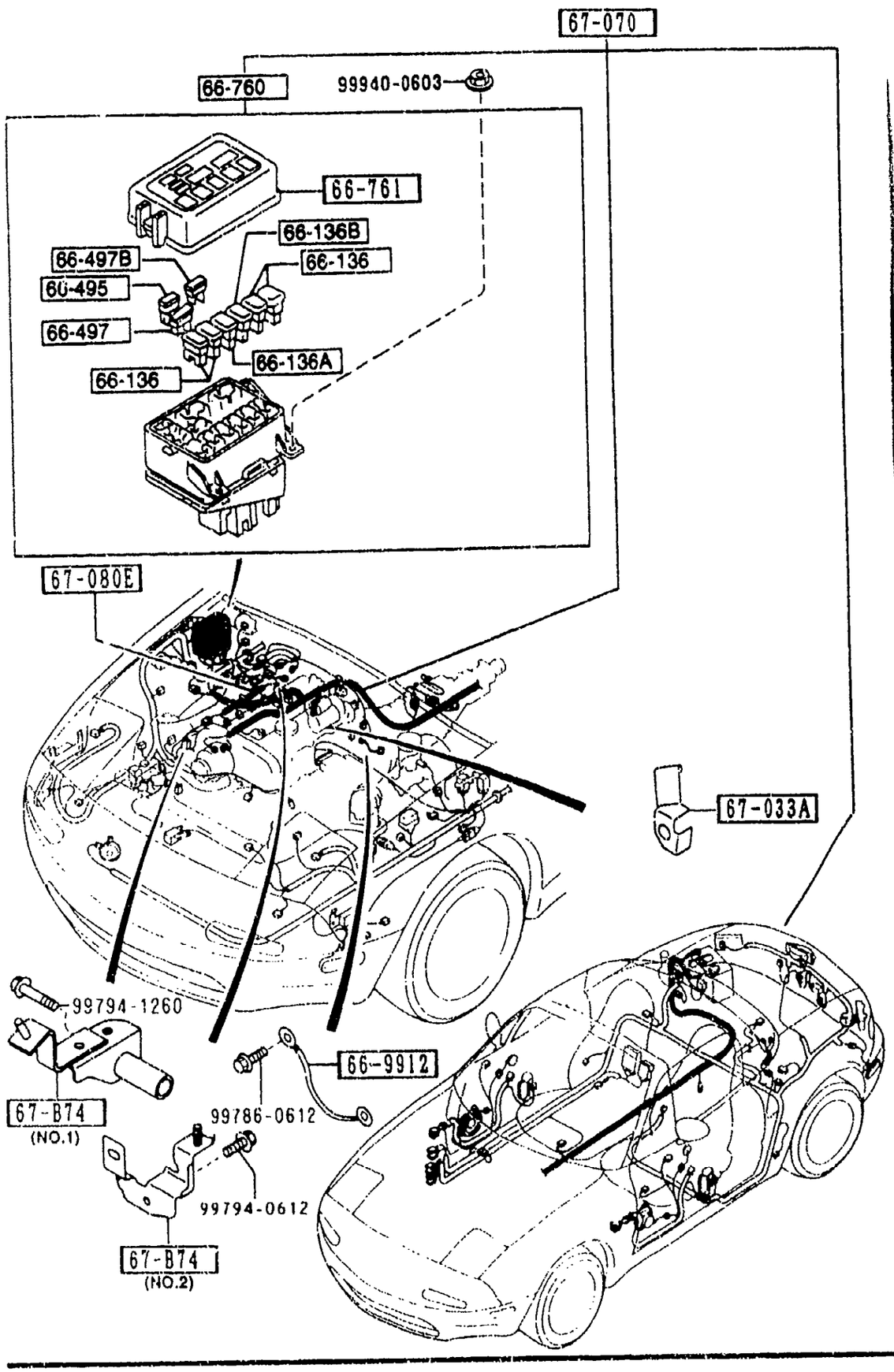

PART NO	QTY	MODEL/RESTRICTION	MODEL/RESTRICTION	MODEL/RESTRICTION	FROM-TO
CONT'D					
NB13-67-070B	1	((AT)>(W/O A. LOCK BRAKE))			
NB14-67-070B	1	((AT)>(W/A. LOCK BRAKE))			
+---------+ | 67-080E | +---------+		WIRING,INJECTOR			
NB38-67-080A	1				

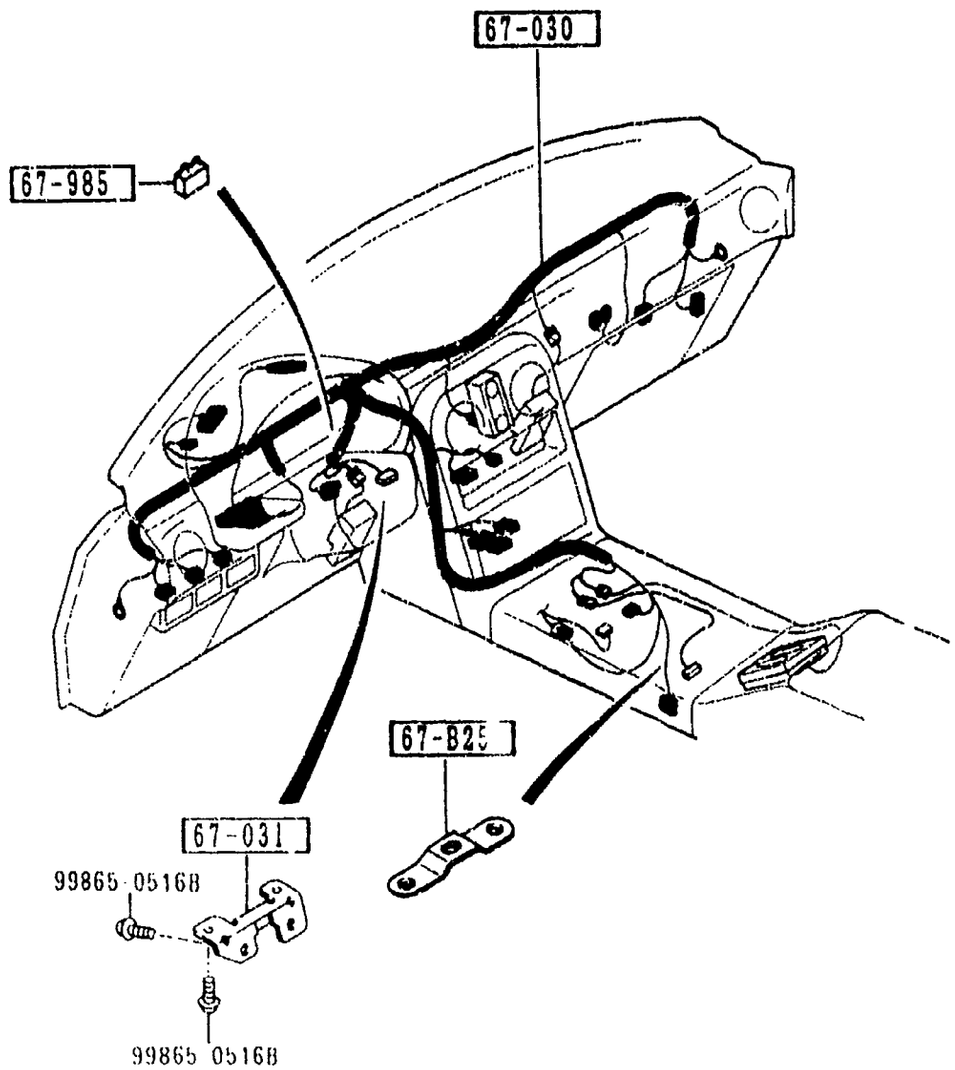

6702 -1 * DASHBOARD WIRING HARNESSES

PART NO.	QTY	MODEL/RESTRICTION	MODEL/RESTRICTION	MODEL/RESTRICTION	FROM-TO
67-B25		BRACKET,HARNESS			
NA01-67-B31	1	(MT)			
67-030		HARNESS,INSTRUMENT			
NB38-67-030B	1	(AM/FM,W/C.DISC) (MT)			
NB42-67-030B	1	(AM/FM,W/C.DISC) (AT)			
NB43-67-030B	1	(AM/FM,W/O C.DISC) (W/O AUDIO) (AT)			
NB39-67-030B	1	(AM/FM,W/O C.DISC) (W/O AUDIO) (MT)			-6C01
NB39-67-030B	1	(AM/FM,W/O C.DISC+W/AUTO CRUISE.CONT.) (W/O AUDIO+W/AUTO CRUISE.CONT.) (MT)			6C01-
NC29-67-030	1	(W/O AUDIO+W/O AUTO CRUISE.CONT.) (AM/FM,W/O C.DISC+W/O AUTO CRUISE.CONT.) (MT)			6C01-
67-031		BRACKET			
NB38-60-1A1B	1				
67-985		CONNECTOR,SHORT			
NA80-67-SC0	1	(W/O DAY RUNNING LAMP)			

6C01 NA35*V-725591

6703 -1 * DOOR, FLOOR & CEILING WIRING HARNESSES

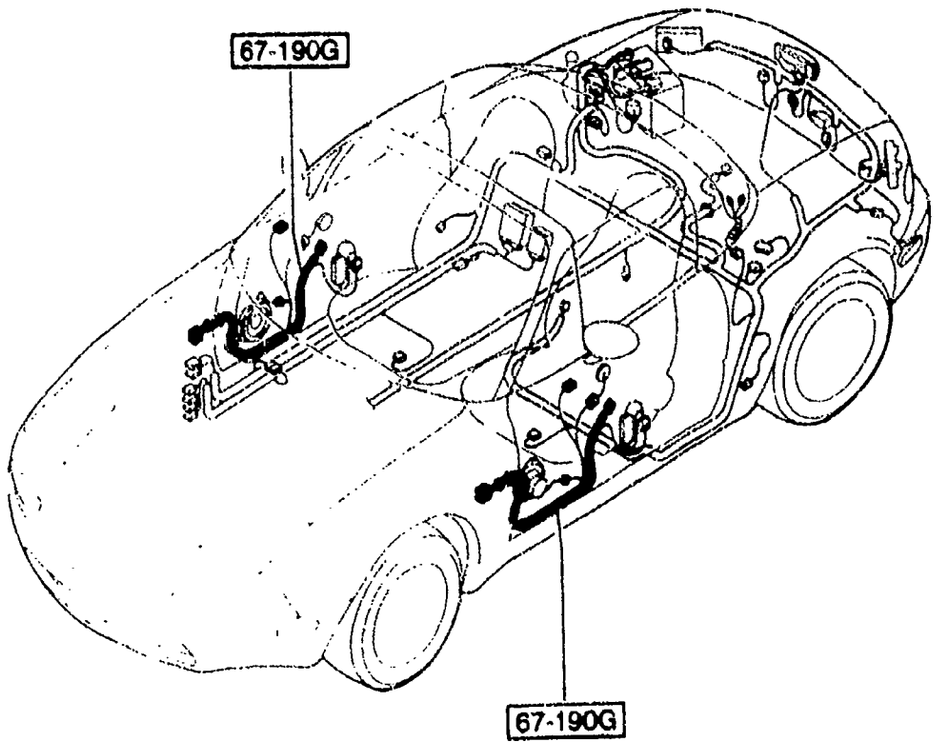

PART NO.	QTY	MODEL/RESTRICTION	MODEL/RESTRICTION	MODEL/RESTRICTION	FROM-TO
67-190G		HARNESS,DOOR			
NA01-67-190A	2	(W/MANUAL DR MIRROR, W/O TWEETE R SPK.,W/O POWER WIND.)			
NA02-67-190A	2	(W/MANUAL DR MIRROR, W/O TWEETER SPK.,W/POWER WIND.)			
NA53-67-190D	2	(W/ELECT.DR MIRROR,W/O TWEETER SPK.)			
NB11-67-190B	2	(W/MANUAL DR MIRROR. W/TWEETER SPK.)			
NB12-67-190C	2	(W/ELECT.DR MIRROR,W/TWEETER SPK.)			

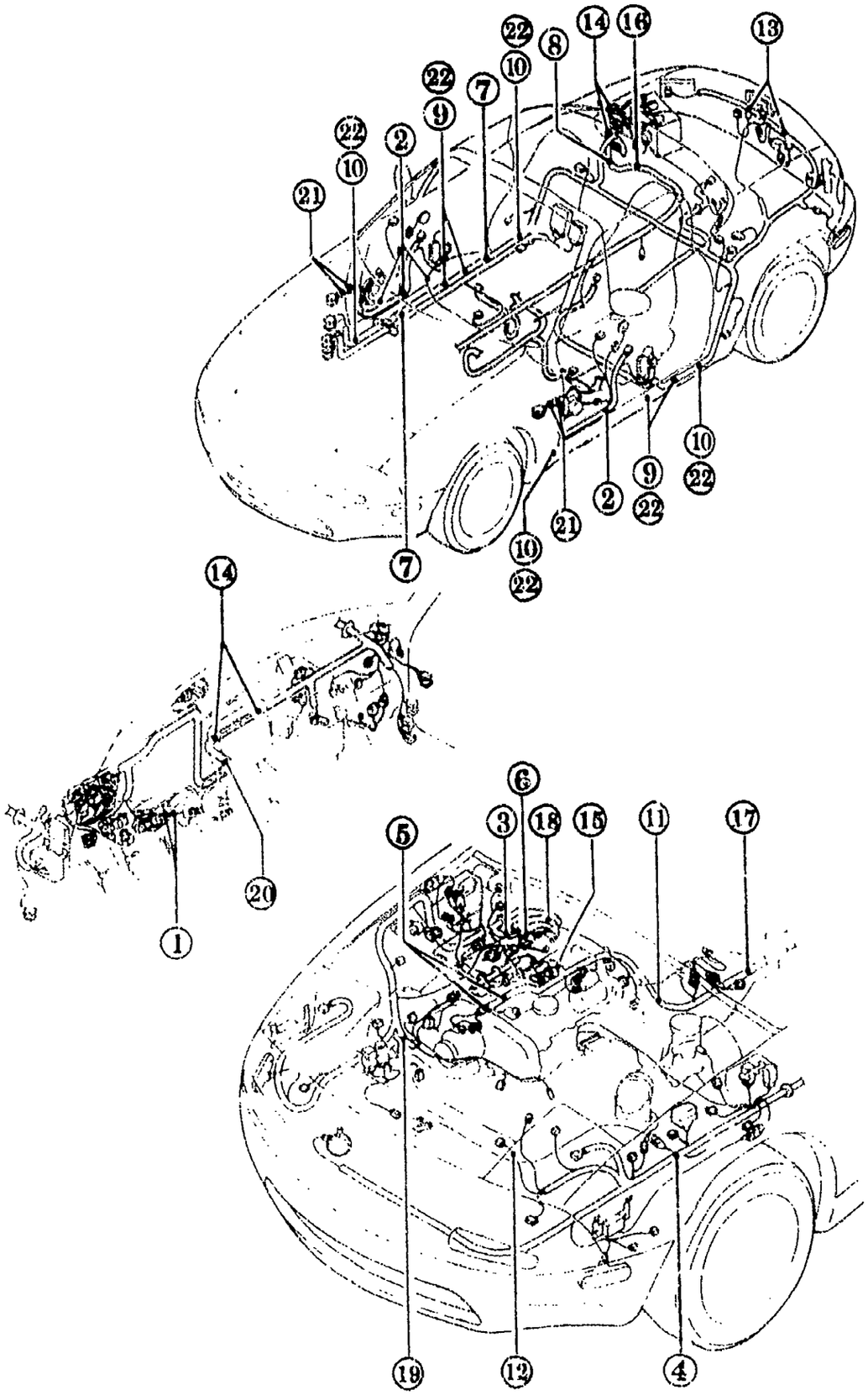

① 14-726	② 45-961B	③ 67-CS1 99786-0612	④ 67-CT2	⑤ 34-C10
⑥ 20-451	⑦ 67-013D	⑧ 67-014F 99786-0620	⑨ 67-022	⑩ 67-026
⑪ 67-048A 99786-0612	⑫ 67-051E	⑬ 67-051J	⑭ 67-052H	⑮ 67-062B 99786-0612
⑯ 67-072H 99786-0620	⑰ 67-073 99796-0812	⑱ 67-073B 99940-0603	⑲ 67-074 99786-0612	⑳ 67-076
㉑ 67-191	㉒ 68-865			

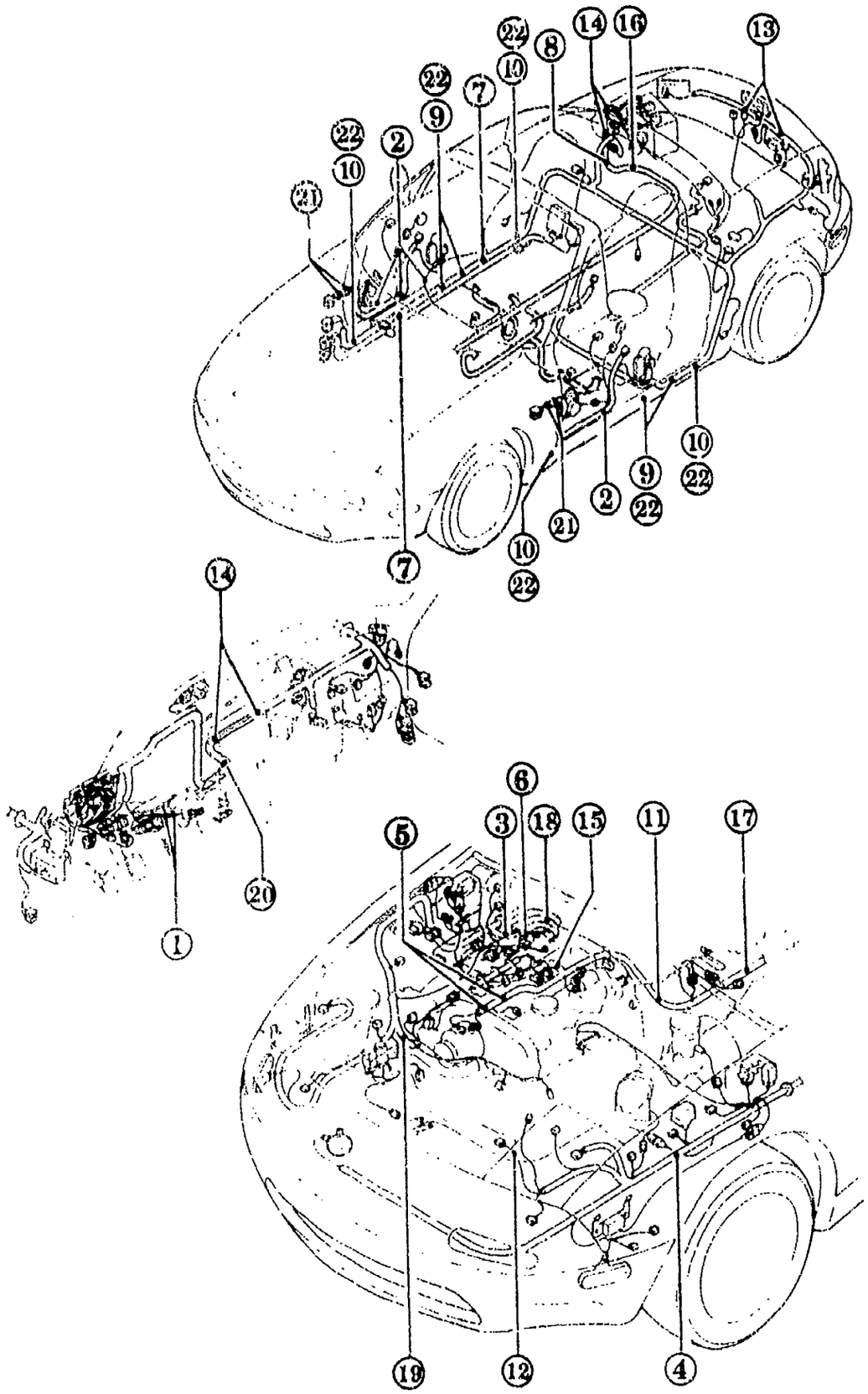

6704 -1 WIRING HARNESS CLAMPS

PART NO.	QTY	MODEL/RESTRICTION	MODEL/RESTRICTION	MODEL/RESTRICTION	FROM-TO
14-726		BAND			
N304-14-726	2				
20-451		CLIP			
B612-20-468	1				
34-C10		BAND,PIPE			
B214-34-C10	2				
45-961B		CAP			
H002-45-961	4				
67-CS1		CLIP,HARNESS			
N001-67-CS1C	1				
67-CT2		CLIP,HARNESS			
NA01-67-CH5	1				
67-013D		PROTECTOR,HARNESS			
NA75-67-P54	2				
67-014F		PROTECTOR,HARNESS			
NA01-67-P71	1				
67-022		CLIP,HARNESS			
NA01-67-CW5A	4				
67-026		CLIP,HARNESS			
NA02-67-CW5A	4				
67-048A		CLIP,HARNESS			
NA01-67-CS1	1				
67-051E		CLIP			
UB42-67-051	1				
67-051J		CLIP			
G031-67-053A	2				
67-052H		CLIP			
G030-67-018A	4				

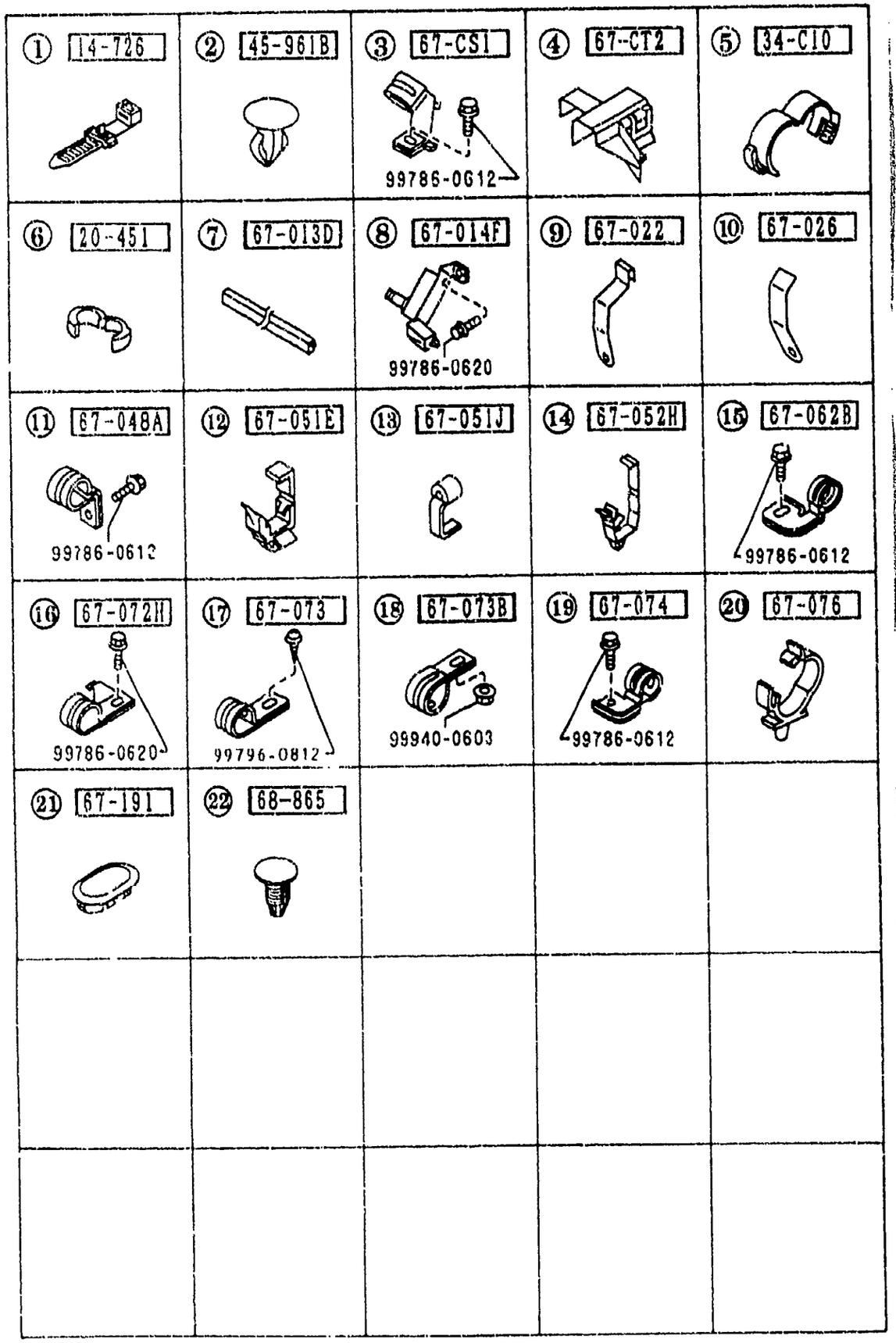

6704 -2 * WIRING HARNESS CLAMPS

PART NO	QTY	MODEL/RESTRICTION	MODEL/RESTRICTION	MODEL/RESTRICTION	FROM-TO
67-062B NA02-67-CS1A	1	CLIP,HARNESS			
67-072H NA01-67-CS6	1	CLIP,ENGINE HARNESS			
67-073 UB73-67-073A	1	CLIP			
67 073B H261-67-073	1	CLIP			
67-074 NA01-67-CS5	1	CLIP,HARNESS			
67-076 NA01-67-CH8	1	CLIP,ENGINE HARNESS			
67-191 B300-67-HD1	4	GROMMET			
68-865 B003-68-865	8	FASTENER			
00	INT-	NA3 NA4 NA5 NA6 BLACK			

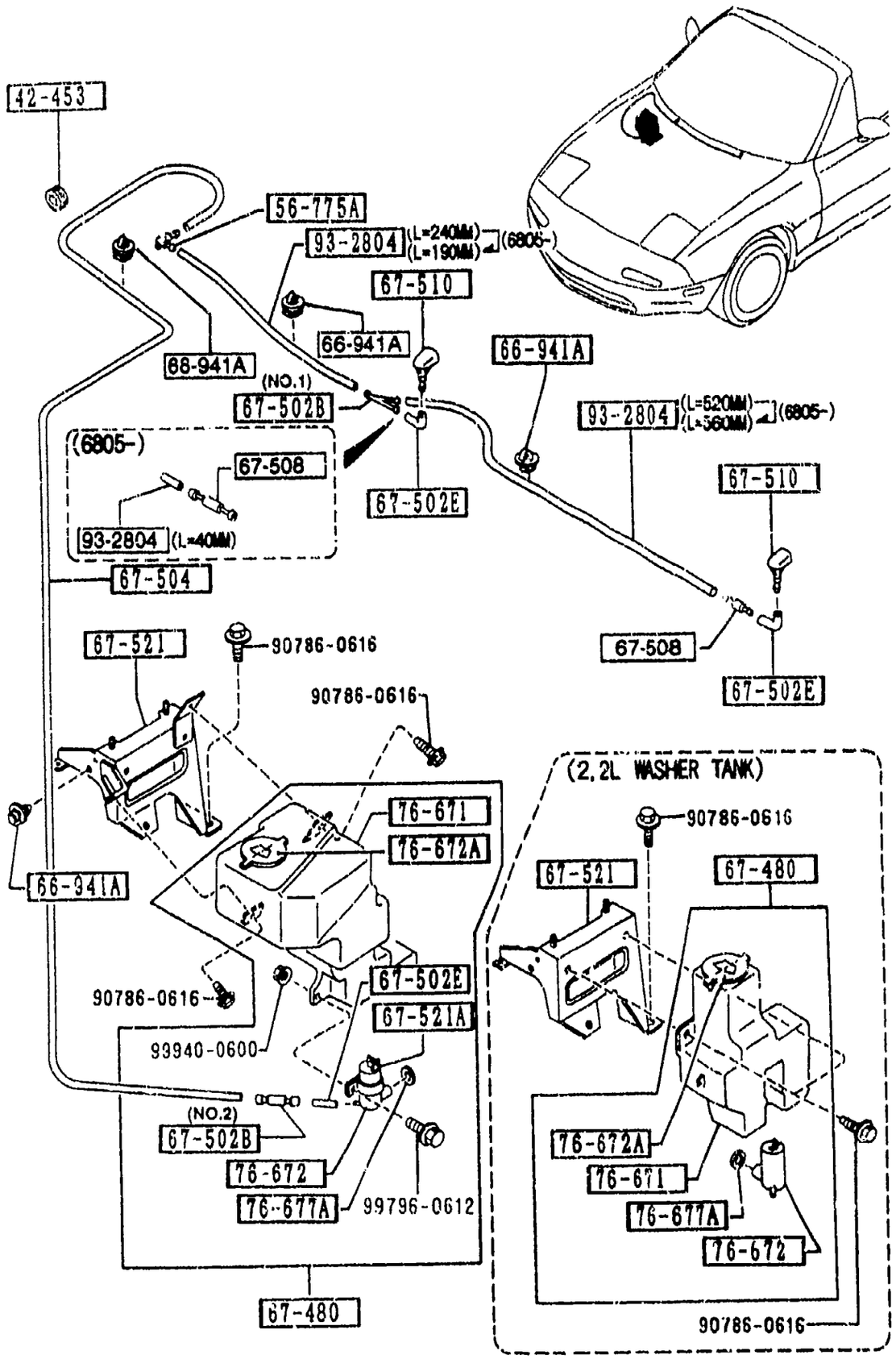

6720 -1 WINDSHIELD WASHER (W/O ANTI LOCK BRAKE)

PART NO.	QTY	MODEL/RESTRICTION	MODEL/RESTRICTION	MODEL/RESTRICTION	FROM-TO
42-453		PROTECTOR,CABLE			
B048-42-453	1				
56-775A		CLIP,WASHER HOSE			
LA01-67-505B	1				
66-941A		CLIP			
GB08-66-941	4				
67-480		TANK,WASHER-FRONT			
NA01-67-480A	1	(2.2L WASHER TANK)			
NA04-67-480B	1	(4.5L WASHER TANK)			
67-502B		JOINT,HOSE			
H001-67-502	1	(ILLUST. NO.1)			
4116-67-502	1	(ILLUST. NO.2) (4.5L WASHER TANK)			
67-502E		JOINT,ELBOW-W.TANK			
S084-67-502	3	(4.5L WASHER TANK)			
67-504		HOSE'C',WASHER			
NA01-67-501A	1				
67-508		VALVE,CHECK			
D805-67-502	1				-6805
FA54-67-508	2				6805-
67-510		NOZZLE,WASHER-F.WIND			
NA01-67-510	2				
67-521		BRACKET,WASHER TANK			
NA01-67-520	1	(2.2L WASHER TANK)			
NA04-67-520	1	(4.5L WASHER TANK)			
67-521A		BRACKET			
S095-67-521	1	(4.5L WASHER TANK)			
76-671		TANK,WASHER			
NA01-67-481	1	(2.2L WASHER TANK)			

6805 NA35*V-719634

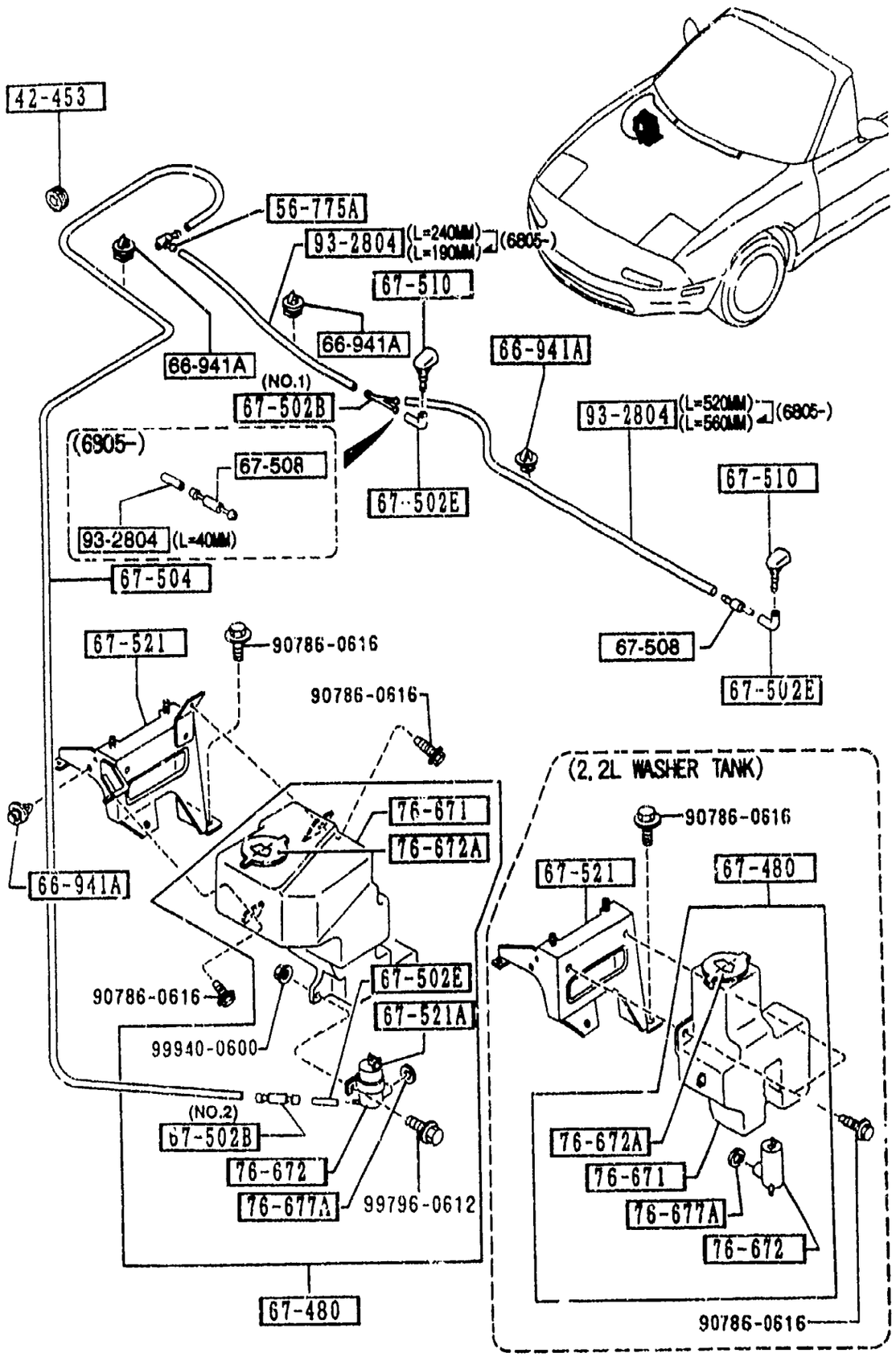

6720 -2 * WINDSHIELD WASHER (W/O ANTI LOCK BRAKE)

PART NO.	QTY	MODEL/RESTRICTION	MODEL/RESTRICTION	MODEL/RESTRICTION	FROM-TO
CONT'D					
NA04-67-481	1	(4.5L WASHER TANK)			
76-672		PUMP,WASHER			
S084-76-672	1				
76-672A		CAP,TANK			
UB39-51-815	1				
76-677A		GROMMET,WASHER TANK			
S084-76-677	1				
93-2804		PIPE,VINYL			
99328-04010	1	L=10M CUT IT TO USE			

6720 A WINDSHIELD WASHER
(W/ANTI LOCK BRAKE)

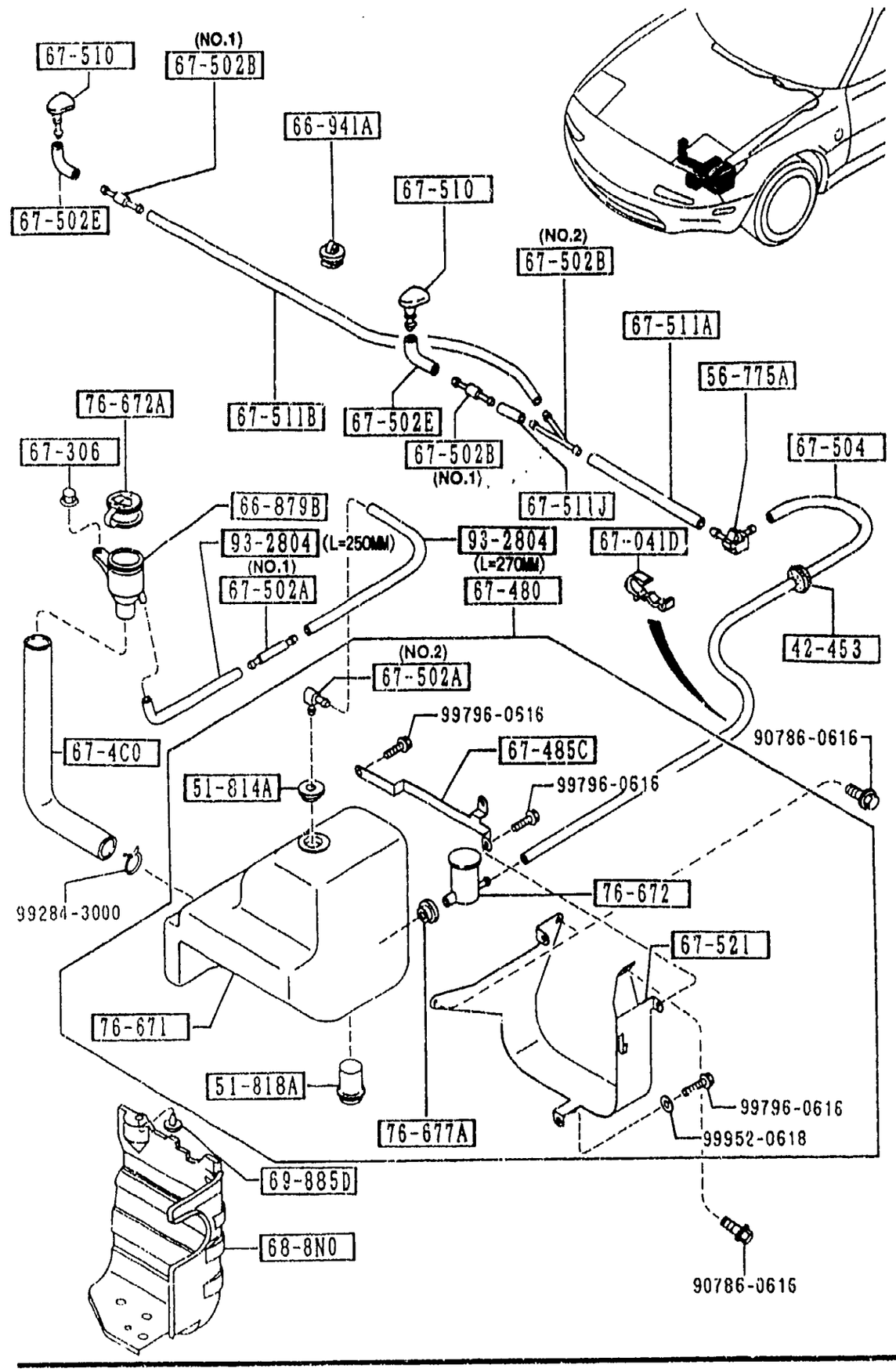

AUNA06

6720 A-1 WINDSHIELD WASHER
(W/ANTI LOCK BRAKE)

PART NO.	QTY	MODEL/RESTRICTION	MODEL/RESTRICTION	MODEL/RESTRICTION	FROM-TO
42-453 B048-42-453	1	PROTECTOR,CABLE			
51-814A B002-51-814	1	GROMMET,WASHER TANK			
51-818A NA17-67-488	1	SWITCH,LEVEL-WASHER TANK			
56-775A LA01-67-505B	1	CLIP,WASHER HOSE			
66-879B NA17-67-4C2	1	JOINT			
66-941A GB08-66-941	3	CLIP			
67-041D B092-67-041	1	CLIP,HARNESS			
67-306 GJ21-67-306	1	NUT,WIPER LINK			
67-4C0 NA17-67-4C1	1	PIPE,FILLER-F.WASHER TANK			
67-480 NA17-67-4T0A	1	TANK,WASHER-FRONT			
67-485C NA18-67-521	1	BRKT'A',WASHER TANK-FRT			
67-502A NA17-67-502	1	JOINT,HOSE (ILLUST. NO.1)			
S013-67-502	1	(ILLUST. NO.2)			
67-502B DB05-67-502	2	JOINT,HOSE (ILLUST. NO.1)			
H001-67-502	1	(ILLUST. NO.2)			

6720 A WINDSHIELD WASHER (W/ANTI LOCK BRAKE)

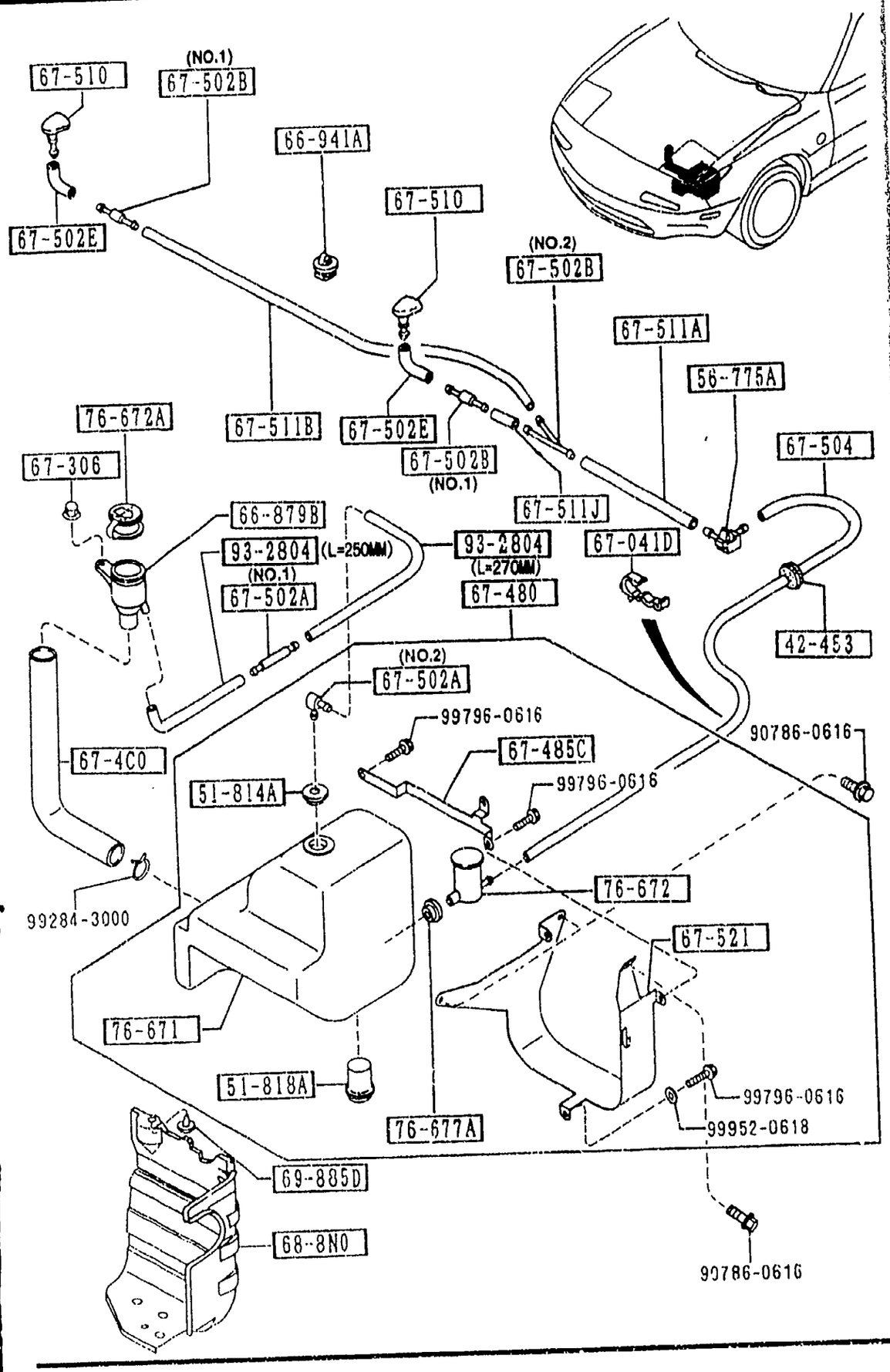

AUNA06

6720 A-2 WINDSHIELD WASHER (W/ANTI LOCK BRAKE)

PART NO.	QTY	MODEL/RESTRICTION	MODEL/RESTRICTION	MODEL/RESTRICTION	FROM-TO
67-502E S084-67-502	2	JOINT,ELBOW-W.TANK			
67-504 NA17-67-501	1	HOSE'C',WASHER			
67-510 NA01-67-510	2	NOZZLE,WASHER-F.WIND			
67-511A NA18-67-501	1	PIPE,SCREEN WASHER			
67-511B NA19-67-501	1	PIPE,SCREEN WASHER			
67-511J NA15-67-501	1	PIPE,SCREEN WASHER			
67-521 NA17-67-521	1	BRACKET,WASHER TANK			
68-8N0 NA20-56-181A	1	COVER,WASHER TANK			
69-885D NA01-56-145	3	FASTENER			
76-671 NA17-67-4T1	1	TANK,WASHER			
76-672 LB83-67-482	1	PUMP,WASHER			
76-672A GJ21-67-483	1	CAP,TANK			
76-677A S084-76-677	1	GROMMET,WASHER TANK			
93-2804 99328-04010		PIPE,VINYL L=10M CUT IT TO USE			

CAT. AUNA06-03

1998-07

6720 A WINDSHIELD WASHER
(W/ANTI LOCK BRAKE)

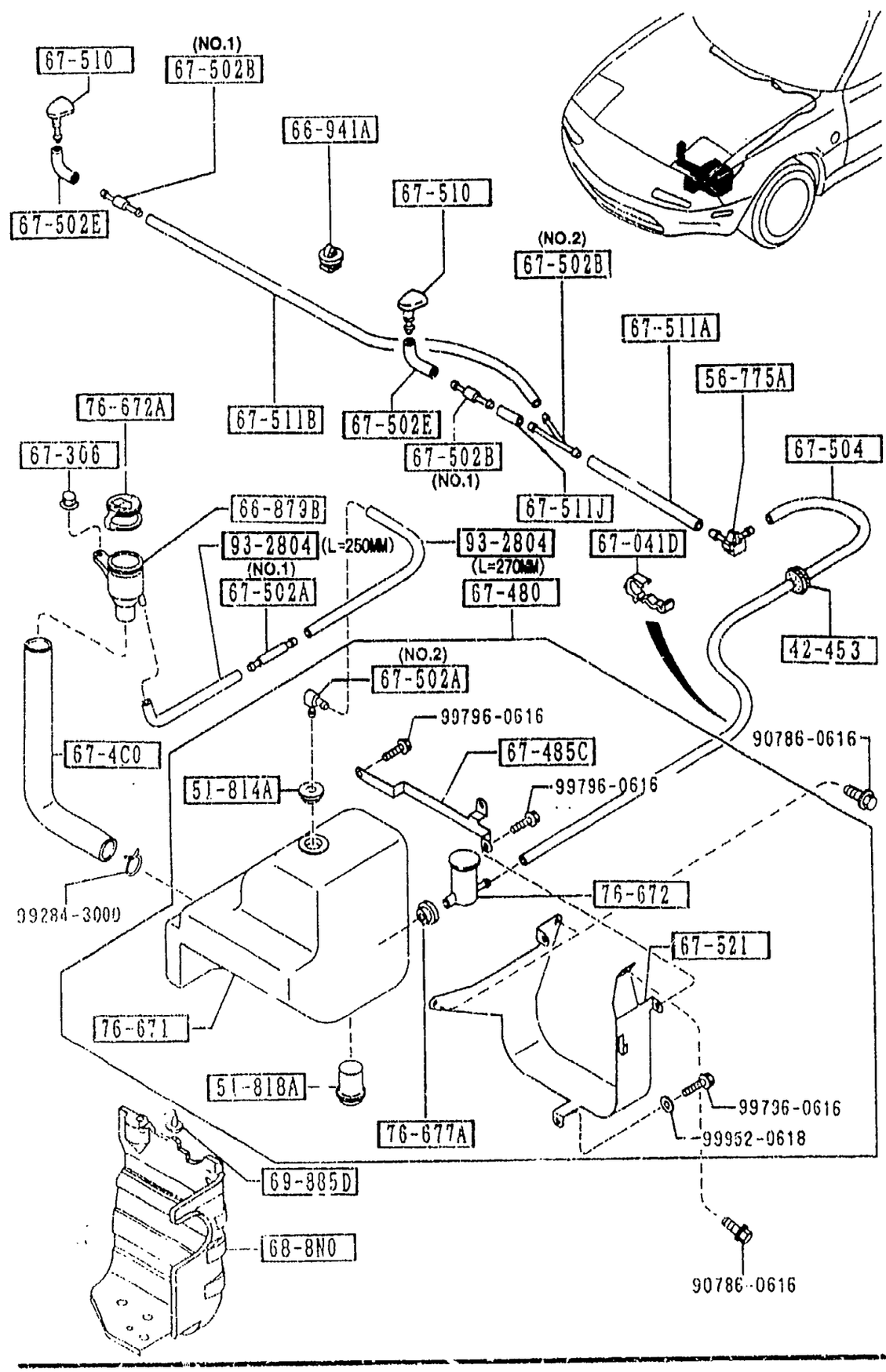

AUNA06

6720 A-3 * WINDSHIELD WASHER
(W/ANTI LOCK BRAKE)

PART NO.	QTY	MODEL/RESTRICTION	MODEL/RESTRICTION	MODEL/RESTRICTION	FROM-TO
CONT'D	1				

CAT. AUNA06-03

1998-07

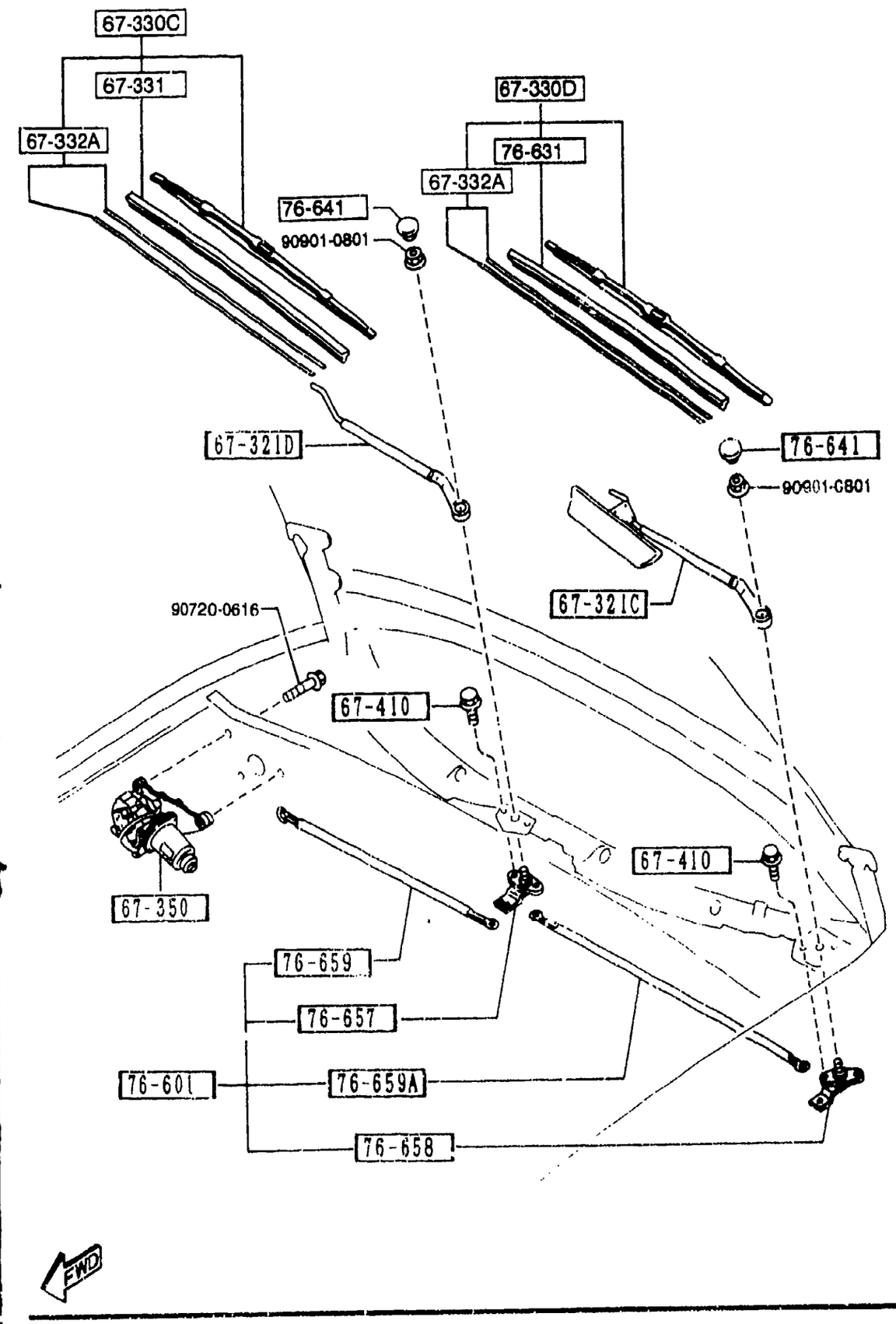

PART NO.	QTY	MODEL/RESTRICTION	MODEL/RESTRICTION	MODEL/RESTRICTION	FROM-TO
67-321C NA01-67-321	1	ARM,WIPER-DRIVER SIDE			
67-321D NA02-67-321	1	ARM,WIPER-PASS. SIDE			
67-330C BR72-67-330B	1	BLADE(R),WIPER-FRONT			
67-330D BM95-67-330B	1	BLADE(L),WIPER-FRONT			
67-331 B461-67-331A	1	RUBBER,BLADE-FRONT			-7501
D040-67-333	1				7501-
67-332A NA10-67-332	2	PLATE,BACKING			7501-
67-350 NA01-67-340B AN(NA01-67-340C)	1	MOTOR,WIPER (EXC. COLD SPEC)			-7501
NA04-67-340A AN(NA04-67-340B)	1	(COLD SPEC)			-7501
*NA01-67-340C AN(NA01-67-340D)	1	(EXC. COLD SPEC)			7501-7916
*NA04-67-340B AN(NA04-67-340C)	1	(COLD SPEC)			7501-7916
*NA01-67-340D	1	(EXC. COLD SPEC)			7916-
*NA04-67-340C	1	(COLD SPEC)			7916-
67-410 B455-67-369	4	BOLT			
76-601 NA01-67-360A	1	LINK,WIPER			
76-631 D040-67-331A G (D040-67-333)	1	RUBBER,BLADE-FRONT			-7501
D040-67-333	1				7501-

7501 NA35*V-736464
7916 NA35*V-739040

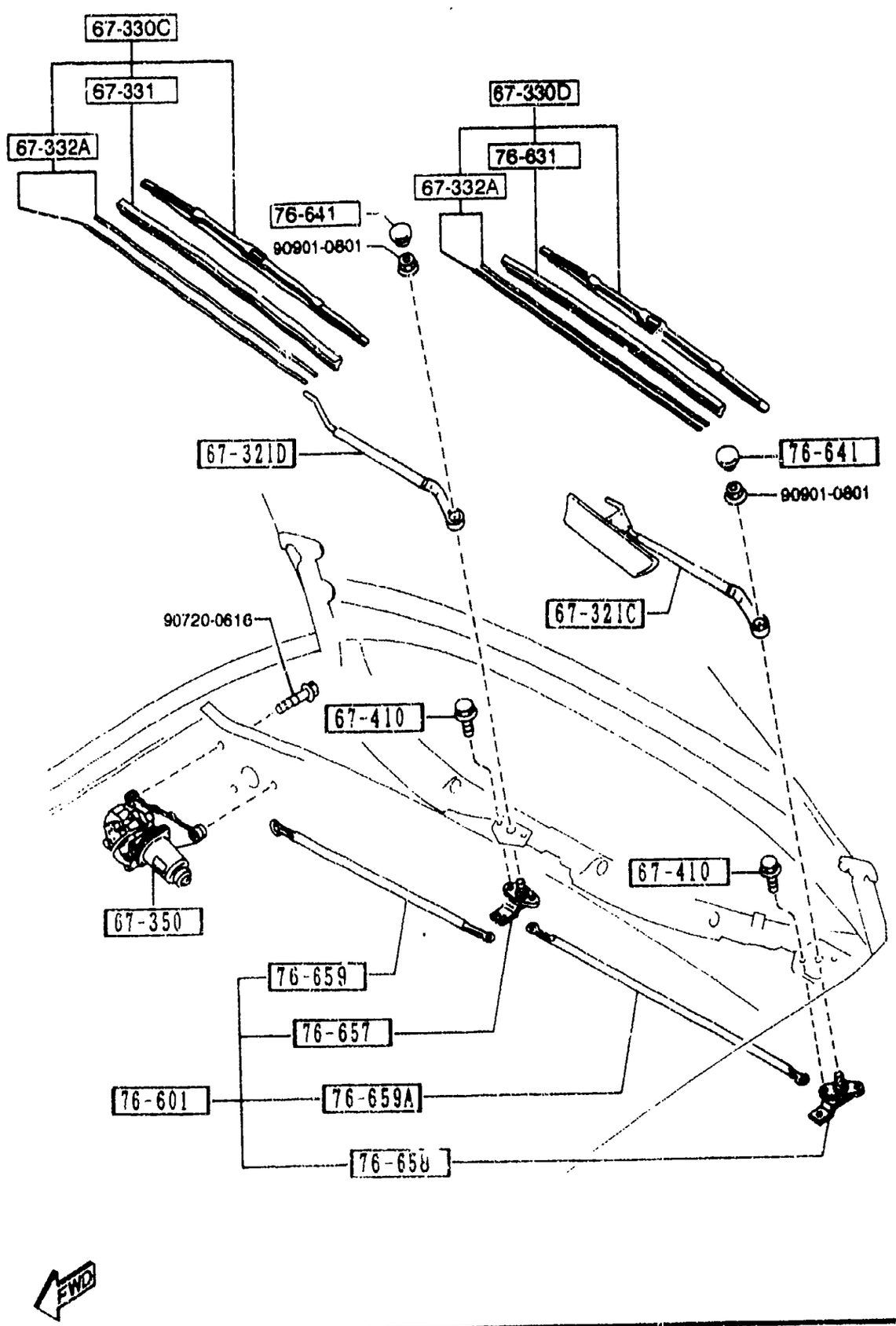

PART NO.	QTY	MODEL/RESTRICTION	MODEL/RESTRICTION	MODEL/RESTRICTION	FROM-TO
76-641		COVER,WIPER ARM-FRONT			
LA01-67-395A	2				-6901
AN(LA01-67-395C)					
LA01-67-395C	2				6901-
76-657		SHAFT,DRIVE NO.1			
NA01-67-363	1				
76-658		SHAFT,DRIVE NO.2			
NA01-67-364	1				
76-659		ARM NO.1,LINK			
NA01-67-361	1				
76-659A		ARM NO.2,LINK			
NA01-67-362	1				

6901 NA35*V-720297

COMPONENTS OF NA01-67-340D
NA04-67-340C

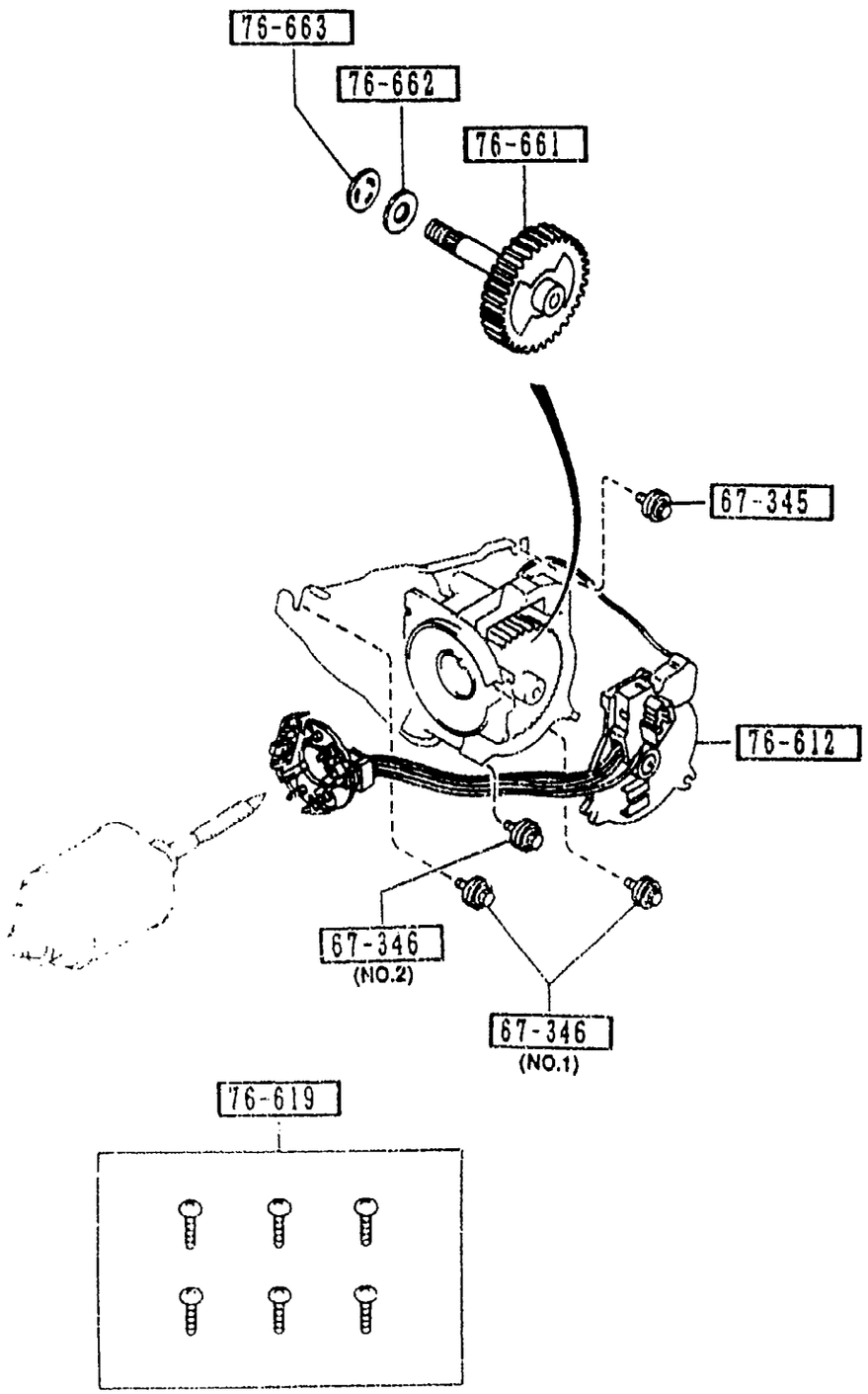

6740 -1 * WIPER MOTOR COMPONRNTS

PART NO.	QTY	MODEL/RESTRICTION	MODEL/RESTRICTION	MODEL/RESTRICTION	FROM-TO
67-345		SCREW,EARTH SET-MOTOR BRK			
NA01-67-345	1				
67-346		SCREW,BRACKET-WIPER MOTOR			
NA01-67-346	2	(ILLUST. NO.1)			
NA23-67-346	1	(ILLUST. NO.2)			
76-612		PLATE,HOLDER-BRUSH			
NA23-67-351	1	(EXC. COLD SPEC)			
NA26-67-351	1	(COLD SPEC)			
76-619		PARTS SET			
H043-76-619A	1				
76-661		GEAR,SHAFT			
NA23-67-354	1				
76-662		WASHER			
B094-76-662	1				
76-663		WASHER,TOOTHED			
B094-76-663	1				

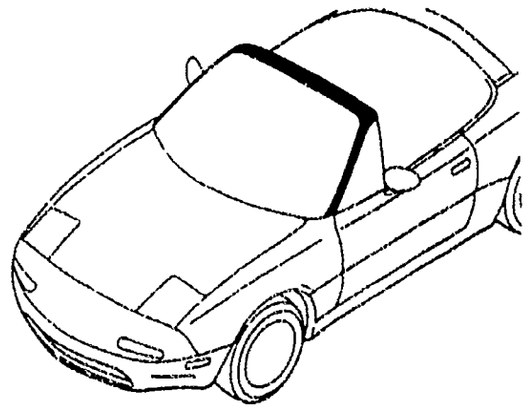

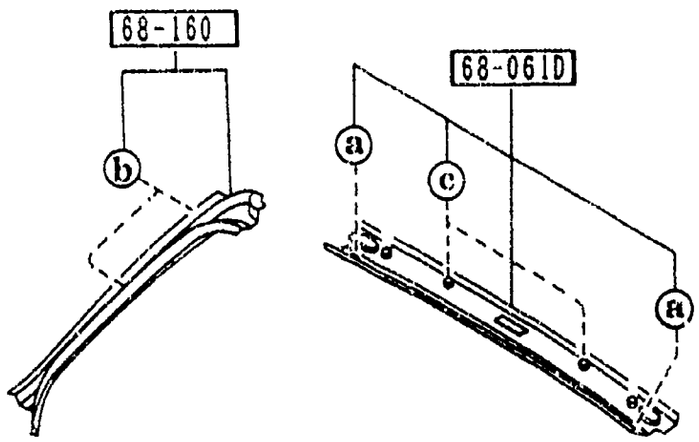

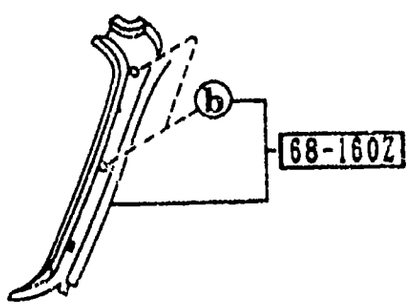

a	b	c
68-AD2	68-865S	68-865U

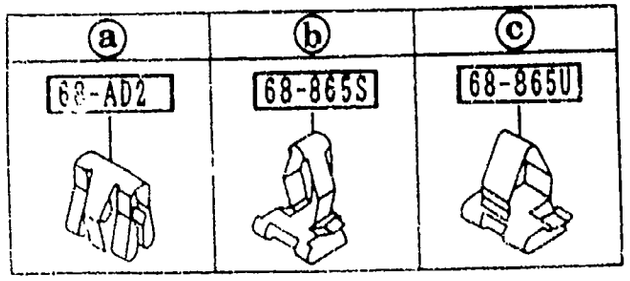

6820 -1 * FRONT HEADER TRIM & PILLAR TRIMS

PART NO.	QTY	MODEL/RESTRICTION	MODEL/RESTRICTION	MODEL/RESTRICTION	FROM-TO
68-AD2		CLIP			
B455-68-AD2	2				
68-061D		TRIM,FRONT HEADER			
NA01-68-090D	1				-7717
00	INT-	NA3 NA4 NA5 NA6 NA7 NA8 BLACK			
*NA01-68-090E	1				7717-
* 00	INT-	NA3 NA4 NA5 NA6 NA7 NA8 BLACK			
68-160		TRIM(R),'A'PILLAR			
NA01-68-160	1				
00	INT-	NA3 NA4 NA5 NA6 NA7 NA8 BLACK			
68-160Z		TRIM(L),'A'PILLAR			
NA01-68-170	1				
00	INT-	NA3 NA4 NA5 NA6 NA7 NA8 BLACK			
68-865S		CLIP,TRIM			
GJ12-68-865	4				
68-865U		CLIP,TRIM			
GJ21-68-865	2				

7717 NA35*V-738778

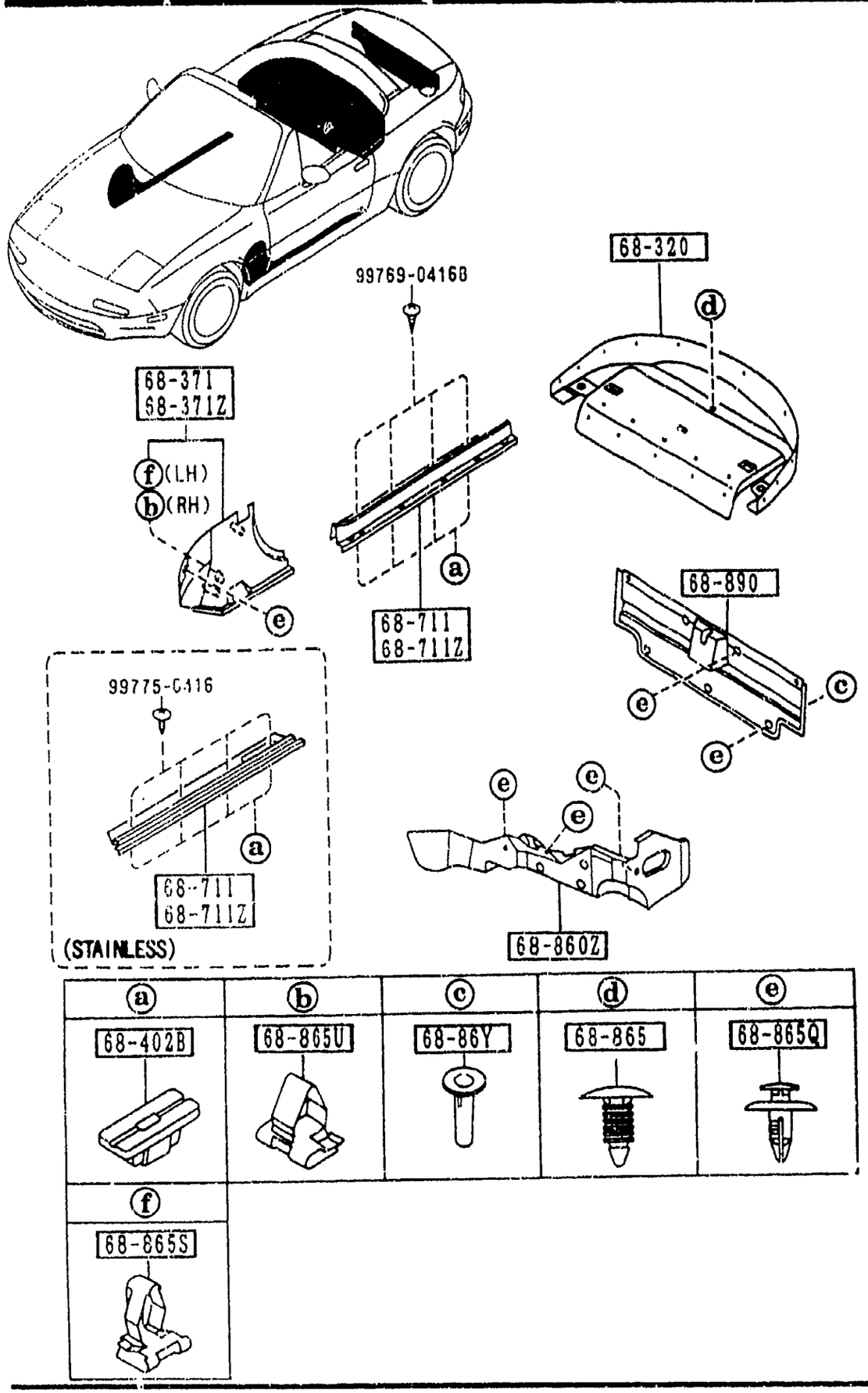

PART NO.	QTY	MODEL/RESTRICTION	MODEL/RESTRICTION	MODEL/RESTRICTION	FROM-TO
68-320		TRAY,REAR PACKAGE			
NB38-68-3F1	1				-7901
02	INT-	NA3 NA7 BLACK			
88	INT-	NA4 NA5 TAN			
*NB38-68-3F1B	1				7901-
* 02	INT-	NA3 NA7 BLACK			
* 88	INT-	NA4 NA5 TAN			
68-371		TRIM(R),FRONT SIDE			
NA75-68-370	1				
00	INT-	NA3 NA7 NA8 BLACK			
88	INT-	NA4 NA5 TAN			
68-371Z		TRIM(L),FRONT SIDE			
NA01-68-390	1				
00	INT-	NA3 NA7 NA8 BLACK			
88	INT-	NA4 NA5 TAN			
68-402B		GROMMET,SCREW			
FA54-68-719B	8				
68-711		PLATE(R),FRONT SCUFF			
NA02-68-710A	1	(STAINLESS)			
NA01-68-711	1	(PLASTIC)			
00	INT-	NA3 NA4 NA5 NA6 NA7 NA8 BLACK			
68-711Z		PLATE(L),FRONT SCUFF			
NA02-68-720B	1	(STAINLESS)			
NA01-68-721	1	(PLASTIC)			
00	INT-	NA3 NA4 NA5 NA6 NA7 NA8 BLACK			
68-86Y		CAP,SEAL-TRUNK END TRIM			
KA01-68-86YA	3				
68-860Z		TRIM(L).TRUNK SIDE			
NU26-68-871A	1				
04	INT-	NA3 NA4 NA5 NA6 NA7			

7901 NA35*V-739040

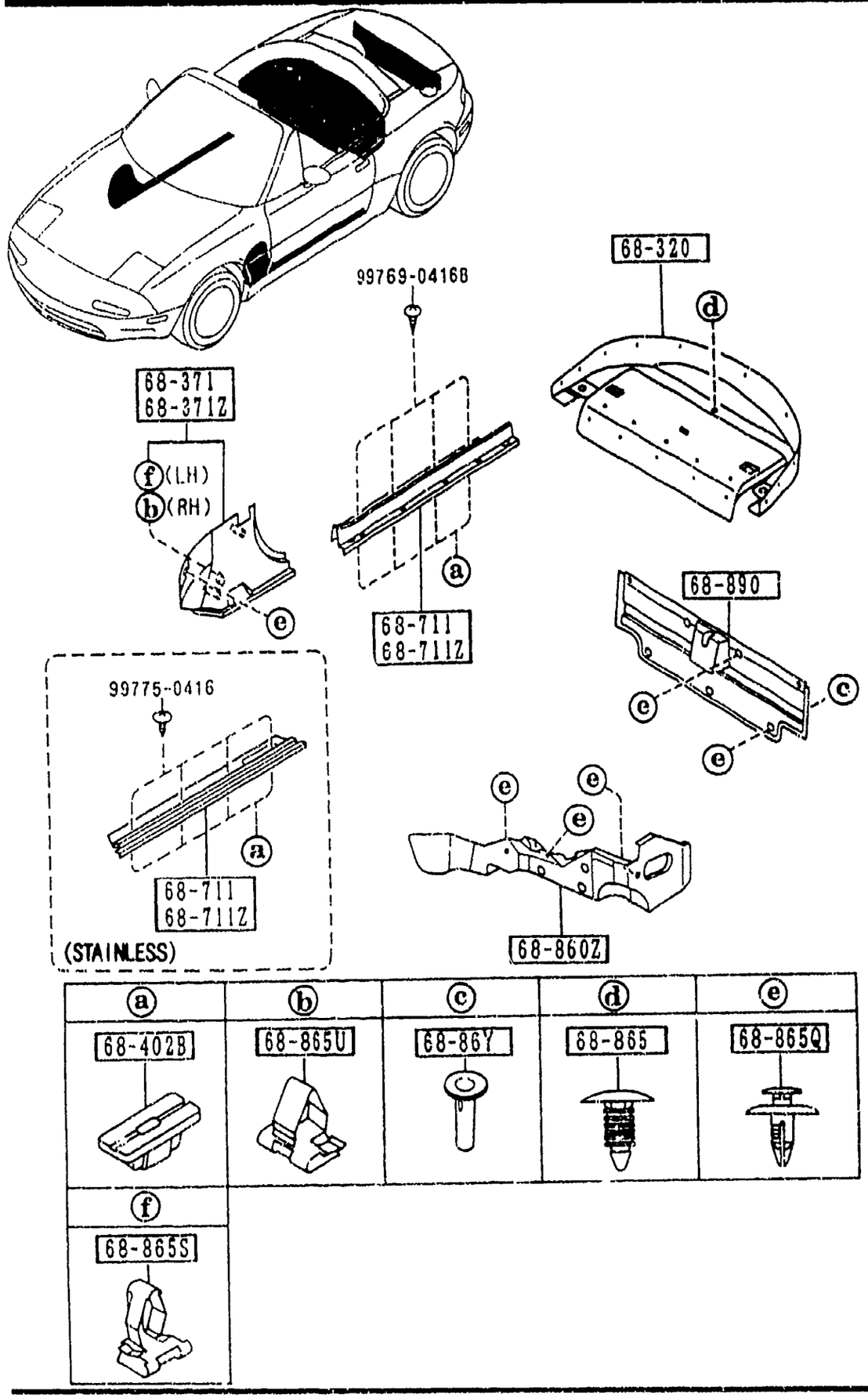

PART NO.	QTY	MODEL/RESTRICTION	MODEL RESTRICTION	MODEL/RESTRICTION	FROM-TO
CONT'D		NA8 BLACK			
68-865		FASTENER			
G032-68-865A	18				
00	INT-	NA3 BLACK			
67	INT-	NA5 TAN			
68-865Q		FASTENER			
GJ21-68-885B	12				
00	INT-	NA3 NA4 NA5 NA6 NA7 NA8 BLACK			
88	INT-	NA4 NA5 TAN			
66-865S		CLIP,TRIM			
GJ12-68-865	1				
68-865U		CLIP,TRIM			
GJ21-68-865	1				
68-890		TRIM,TRUNK END			
NA01-68-891A	1				
04	INT-	NA3 NA4 NA5 NA6 NA7 NA8 BLACK			

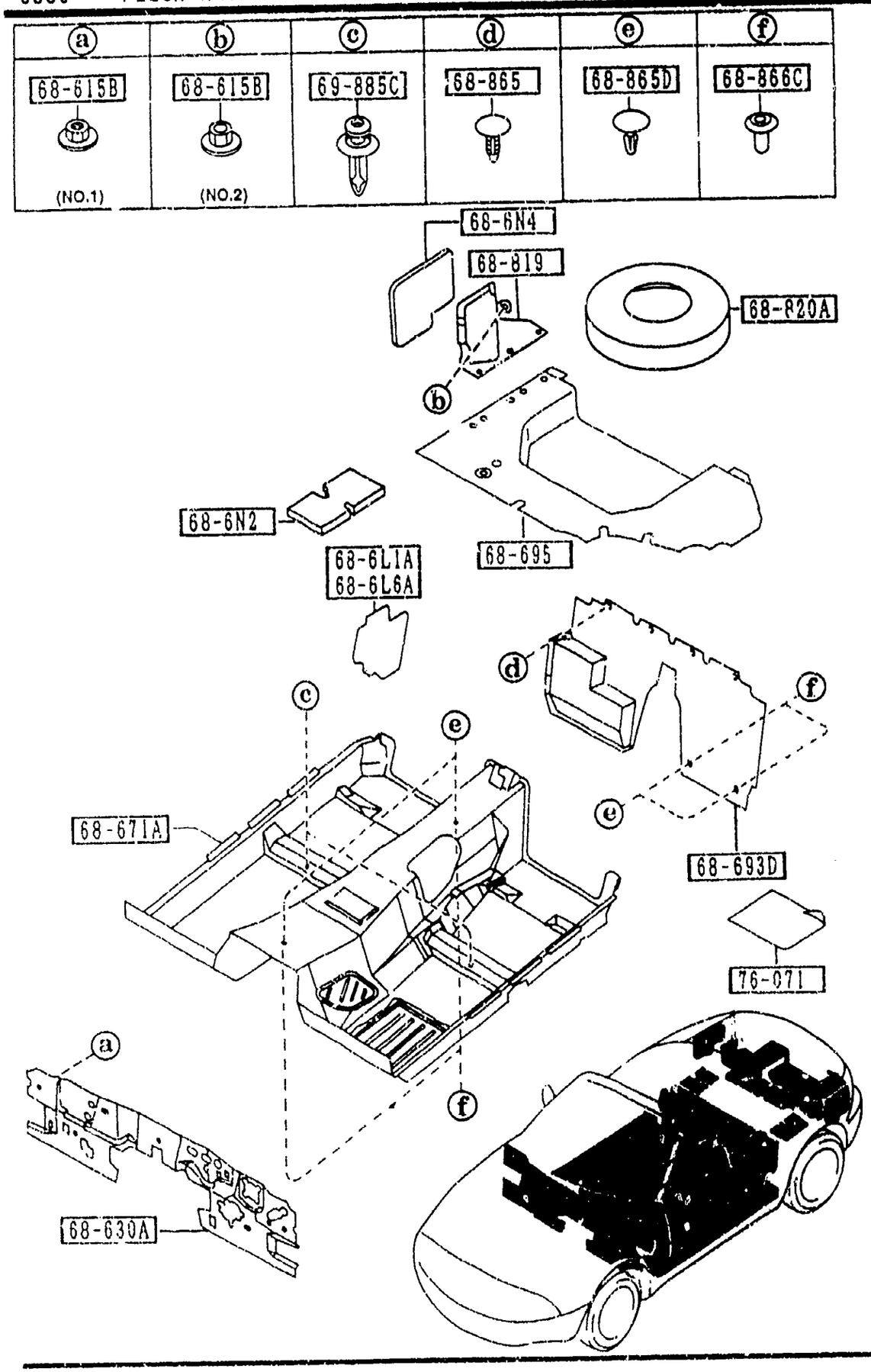

PART NO.	QTY	MODEL/RESTRICTION	MODEL/RESTRICTION	MODEL/RESTRICTION	FROM-TO
68-6L1A		COVER(R),HOLE			
NA01-68-6L1	1				
68-6L6A		COVER(L),HOLE			
NA01-68-6L6	1				
68-6N2		INSULATOR,RR FLOOR			
NA01-68-6N2	2				
68-6N4		PAD,RR FENDER			
NA01-68-6N4	1				
68-615B		NUT,FLANGE-CAP			
B10G-68-615	5	(ILLUST. NO.1)			
NA01-68-615	1	(ILLUST. NO.2)			
68-630A		INSULATOR,DASHBOARD			
NA01-68-631D	1				
68-671A		MAT,FLOOR			
NB38-68-670A	1				
02	INT-	NA3 BLACK			
88	INT-	NA4 NA5 TAN			
68-693D		MAT,REAR END			
NB38-68-693	1				
02	INT-	NA3 BLACK			
88	INT-	NA4 NA5 TAN			
68-695		MAT,TRUNK ROOM			
NA01-68-811A	1				
04	INT-	NA3 NA4 NA5 NA6 NA7 NA8 BLACK			
68-819		COVER,BATTERY			
NA01-68 819C	1				
04	INT-	NA3 NA4 NA5 NA6 NA7 NA8 BLACK			
68-820A		COVER,SPARE TIRE			

6860 FLOOR MATS & PADS

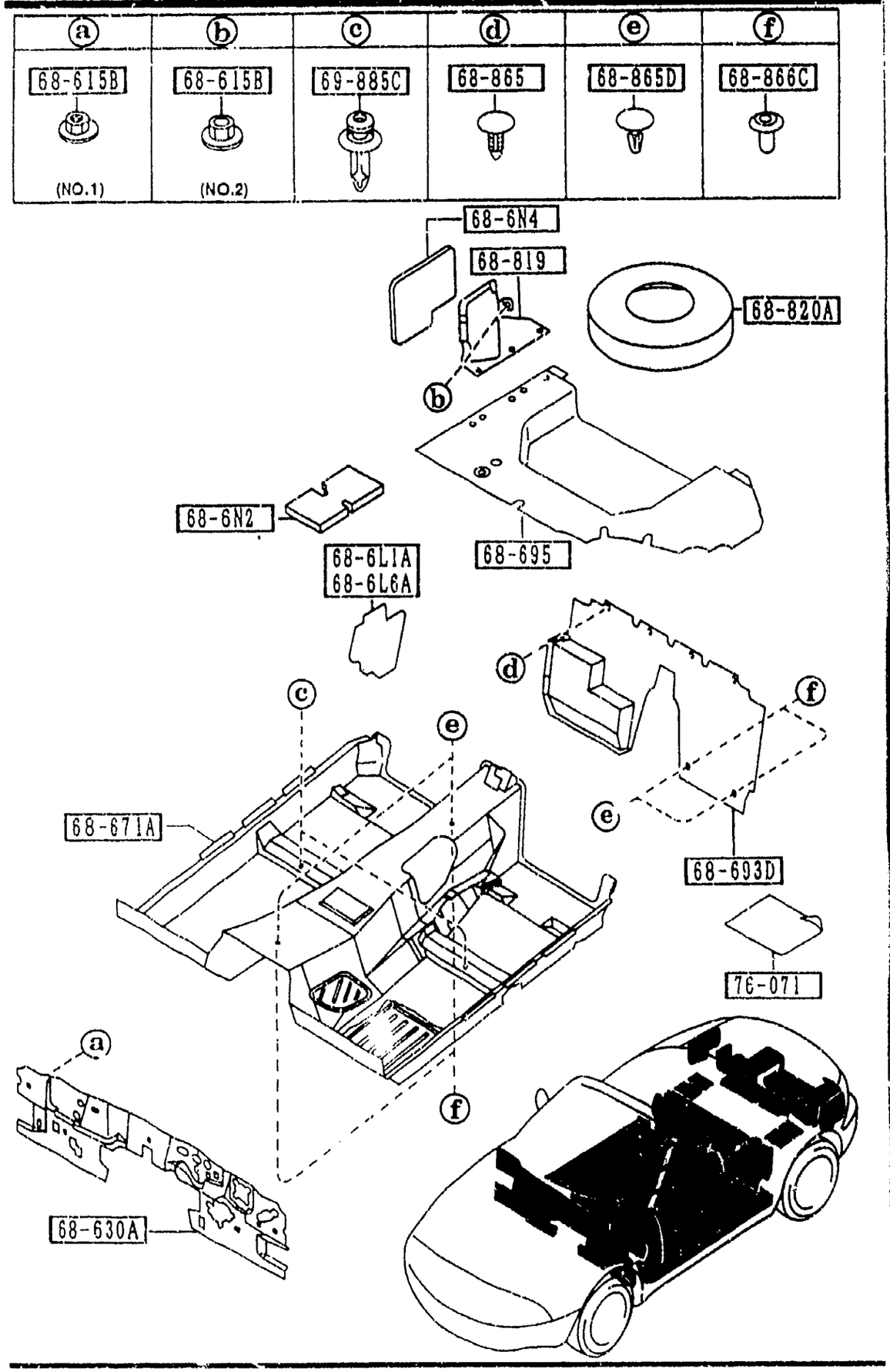

PART NO.	QTY	MODEL/RESTRICTION	MODEL/RESTRICTION	MODEL/RESTRICTION	FROM-TO
CONT'D					
NAC1-68-8P9A	1				
68-865		FASTENER			
G032-68-865A	4				
00	INT-	NA3 BLACK			
67	INT-	NA5 TAN			
68-865D		FASTENER			
S083-68-865A	4				
00	INT-	NA3 NA7 NA8 BLACK			
88	INT-	NA4 NA5 TAN			
68-866C		FASTENER,SEAL			
B235-68-865A	4				
69-885C		FASTENER			
UB54-68-885	2				
00	INT-	NA3 NA4 NA5 NA6 NA7 NA8 BLACK			
76-071		SILENCER,FLOOR			
0208-76-071	1	30CMX30CM			

6870 -1 * SERVICE TOOLS

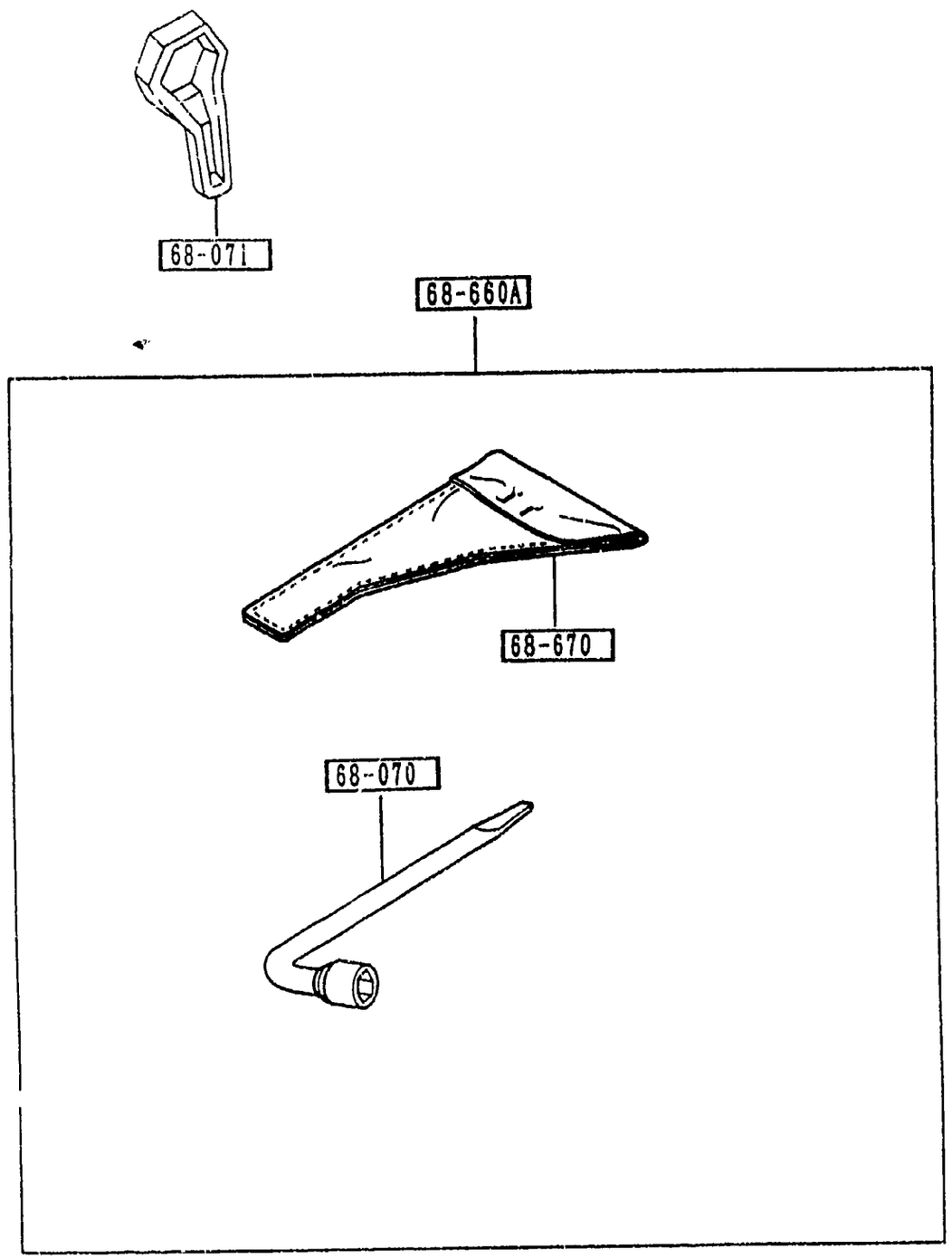

PART NO.	QTY	MODEL/RESTRICTION	MODEL/RESTRICTION	MODEL/RESTRICTION	FROM-TO
68-070		WRENCH,HUB NUT			
NA01-68-070	1				
68-071		WRENCH,WHEEL CAP			
F057-68-071	1	(HALF CAP)			
68-660A		TOOL SET			
NA01-69-650	1				-6901
AN(NA01-69-650A)					
NA01-69-650A	1				6901-
68-670		BAG,TOOL			
NA01-69-670	1				-6901
AN(NA01-69-670A)					
NA01-69-670A	1				6901-

6901 NA35*V-720297

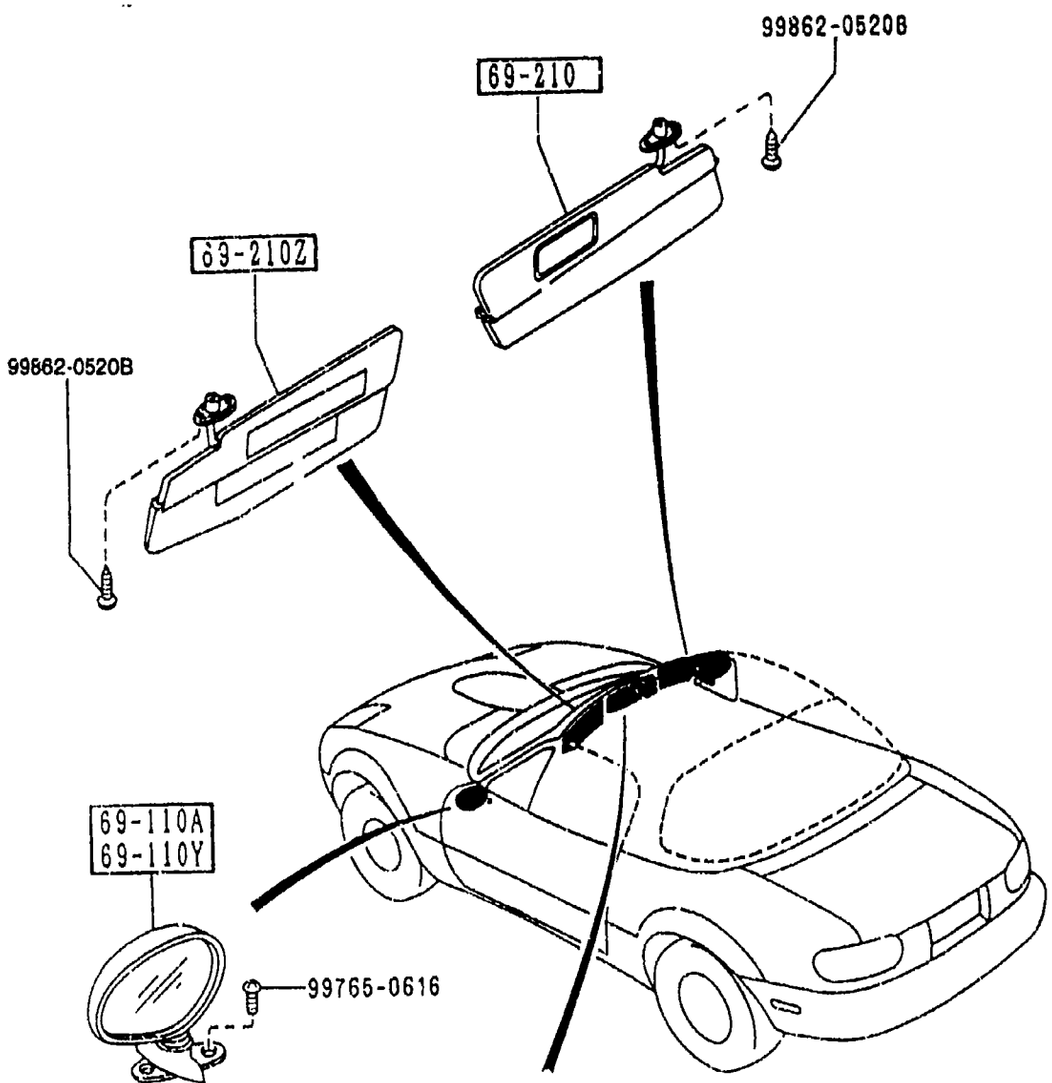

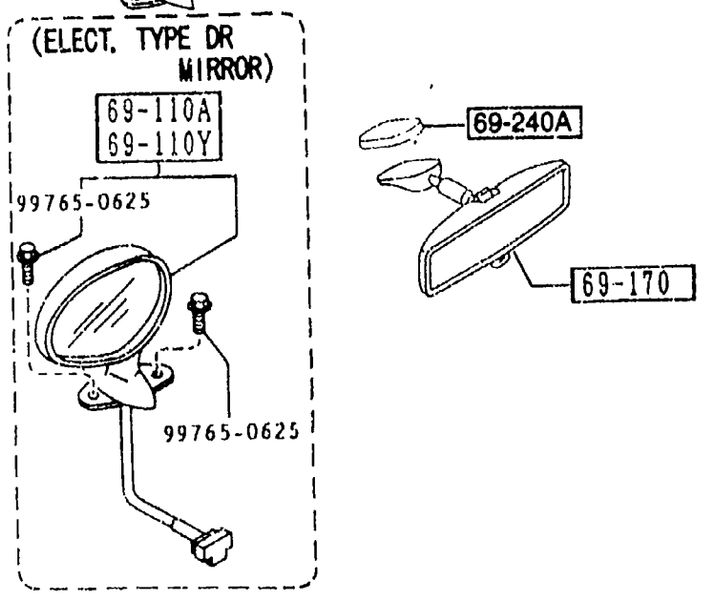

PART NO.	QTY	MODEL/RESTRICTION	MODEL/RESTRICTION	MODEL/RESTRICTION	FROM-TO
69-110A		MIRROR(R),DOOR			
NA05-69-120C	1	BASE, R-PKG, (MANUAL TYPE DR MIRROR)			
A5	EXT-	A5 SATELLITE BLUE MC			
HU	EXT-	HU NEO GREEN			
M8	EXT-	M8 MONTEGO BLUE M			
PT	EXT-	PT CHAST WHITE			
PZ	EXT-	PZ BRILLIANT BLACK			
SU	EXT-	SU CLASSIC RED			
23	EXT-	13C MARINA GREEN MC			
57	EXT-	12K TWILIGHT BLUE			
NA52-69-120C	1	F-SV, L-PKG, P.E.GR, T-PKG, (ELECT. TYPE DR MIRROR)			
A5	EXT-	A5 SATELLITE BLUE MC			
HU	EXT-	HU NEO GREEN			
M8	EXT-	M8 MONTEGO BLUE M			
PT	EXT-	PT CHAST WHITE			
PZ	EXT-	PZ BRILLIANT BLACK			
SU	EXT-	SU CLASSIC RED			
23	EXT-	13C MARINA GREEN MC			
57	EXT-	12K TWILIGHT BLUE			
69-110Y		MIRROR(L),DOOR			
NA05-69-180C	1	BASE, R-PKG, (MANUAL TYPE DR MIRROR)			
A5	EXT-	A5 SATELLITE BLUE MC			
HU	EXT-	HU NEO GREEN			
M8	EXT-	M8 MONTEGO BLUE M			
PT	EXT-	PT CHAST WHITE			
PZ	EXT-	PZ BRILLIANT BLACK			
SU	EXT-	SU CLASSIC RED			
23	EXT-	13C MARINA GREEN MC			
57	EXT-	12K TWILIGHT BLUE			
NA52-69-180C	1	F-SV, L-PKG, P.E.GR, T-PKG,			

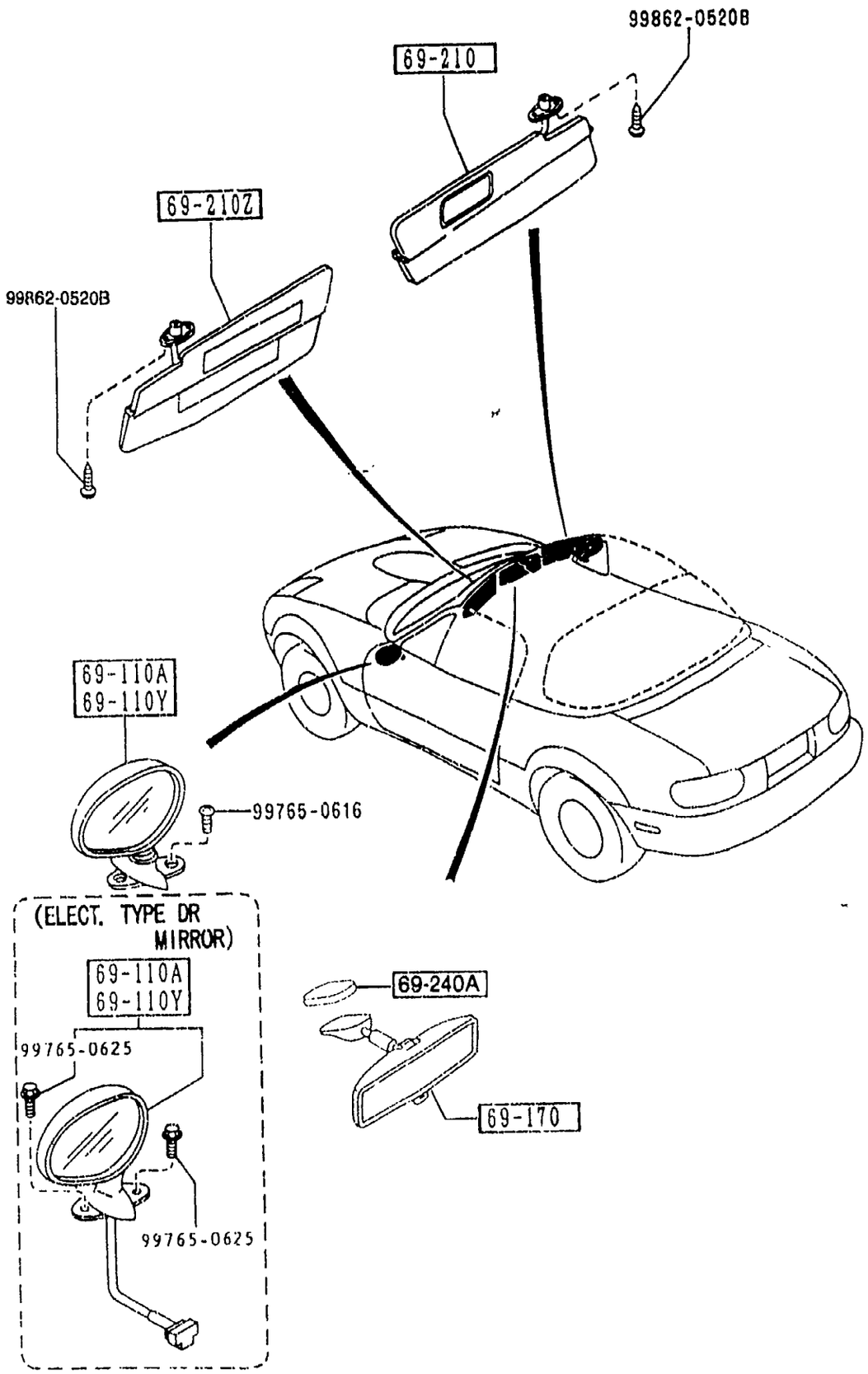

PART NO.	QTY	MODEL/RESTRICTION	MODEL/RESTRICTION	MODEL/RESTRICTION	FROM-TO
CONT'D		(ELECT. TYPE DR MIRROR)			
A5	EXT-	A5 SATELLITE BLUE MC			
HU	EXT-	HU NEO GREEN			
M8	EXT-	M8 MONTEGO BLUE M			
PT	EXT-	PT CHAST WHITE			
PZ	EXT-	PZ BRILLIANT BLACK			
SU	EXT-	SU CLASSIC RED			
23	EXT-	13C MARINA GREEN MC			
57	EXT-	12K TWILIGHT BLUE			
+---------+ | 69-170 | +---------+		MIRROR,INTERIOR			
HG82-69-220A	1				
+---------+ | 69-210 | +---------+		SUN VISOR(R)			
NB12-69-270A	1				-7301
02	INT-	NA3 NA4 NA5 NA7 NA8 BLACK			
NB39-69-270B	1				7301-7701
02	INT-	NA3 NA4 NA5 NA7 NA8 BLACK			
*NB39-69-270C	1				7701-7A01
* 02	INT-	NA3 NA4 NA5 NA7 NA8 BLACK			
*NB39-69-270D	1				7A01-
* 02	INT-	NA3 NA4 NA5 NA7 NA8 BLACK			
+---------+ | 69-210Z | +---------+		SUN VISOR(L)			
NB11-69-320B	1				-7301
02	INT-	NA3 NA4 NA5 NA7 NA8 BLACK			
NB39-69-320B	1				7301-7A01
02	INT-	NA3 NA4 NA5 NA7 NA8 BLACK			
*NB39-69-320C	1				7A01-
* 02	INT-	NA3 NA4 NA5 NA7 NA8 BLACK			
+---------+ | 69-240A | +---------+		BASE,INTERIOR MIRROR			

7301 NA35*V-732210
7701 NA35*V-738443
7A01 NA35*V-739048

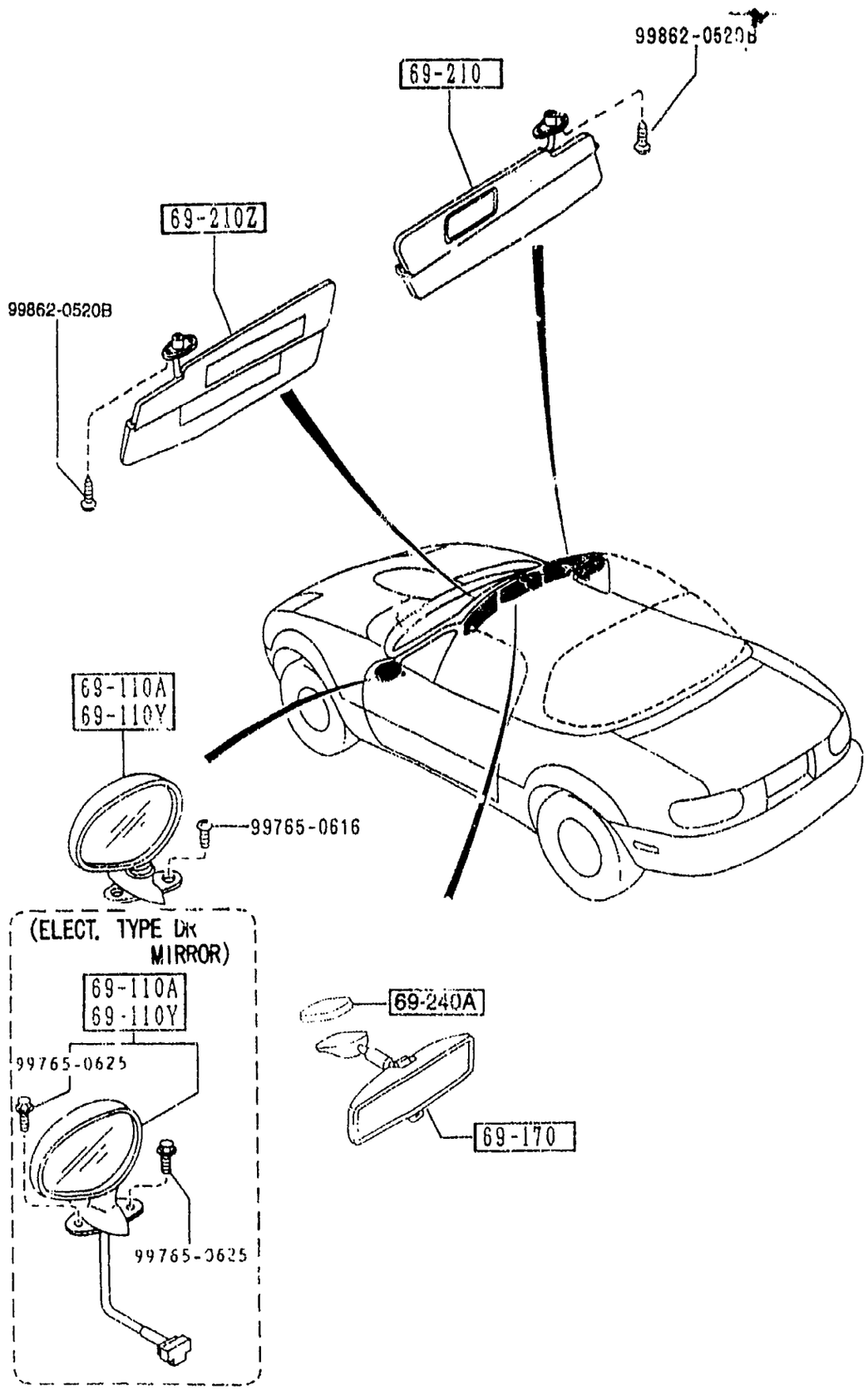

PART NO.	QTY	MODEL/RESTRICTION	MODEL/RESTRICTION	MODEL/RESTRICTION	FROM-TO
CONT'D					
BC1C-69-740	1				

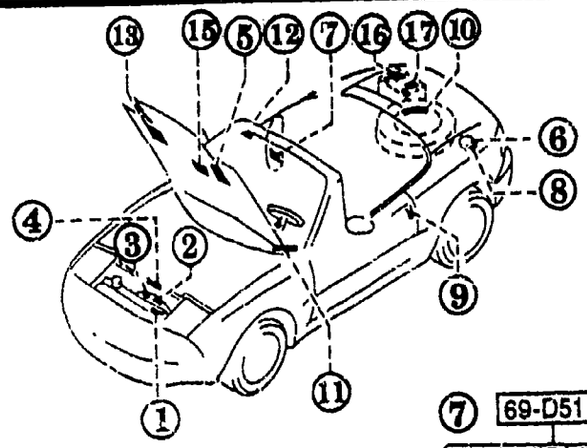

51-791B (PUT IN THE GLOVE BOX)

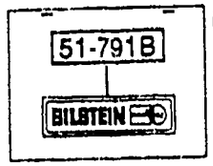

66-201B (PUT IN THE REAR CONSOLE BOX)

69-A13

(NO.1)
1 15-031

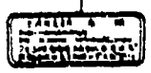

(NO.2)
2 15-031

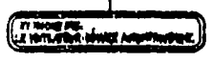

3 15-201A

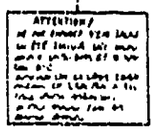

4 51-408A

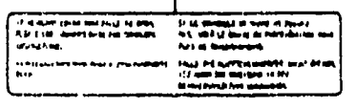

5 61-829

6 69-C61

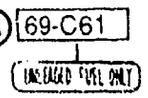

7 69-D51

8 69-D61

9 69-014

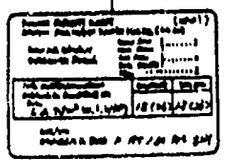

10 69-014A

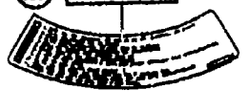

11 69-021A

12 69-037

13 69-041

15 69-044A

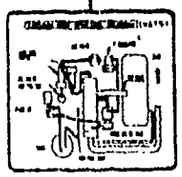

(NO.1)
16 69-064

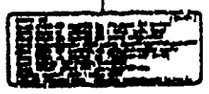

(NO.2)
17 69-064

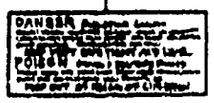

(PUT IN THE GLOVE BOX)
57-K93

PART NO.	QTY	MODEL/RESTRICTION	MODEL/RESTRICTION	MODEL/RESTRICTION	FROM-TO
15-031		LABEL,CAUTION			
B660-15-031	1	ENGLISH (ILLUST. NO.1)			
E508-15-031	1	FRENCH (ILLUST. NO.2)			
15-201A		LABEL,CAUTION-RADIATOR			
8791-15-201	1				
51-408A		LABEL,CAUTION-RETRACTABLE			
NA04-51-S02	1				
51-791B		LABEL,BILSTEIN			
N021-51-790	1				
57-K93		LABEL'C',CAUTION-A/B			
*BG1R-57-K93A	1	(W/AIR BAG-DRIV.&PASS.SIDE)			7301-
61-829		LABEL,CAUTION			
FD16-61-439B	1	(A)			
66-201B		LABEL,ANTI THEFT-AUDIO			
NA01-66-201	1				
69-A13		RIVET,BLIND,VIN PLATE			
GJ21-69-A13	2				
69-C61		LABEL,UNLEADED FUEL			
UB40-69-C61	1				
69-D51		LABEL,VEHICLE INFORMATION VIN NO. IS REQIRED			
B001-69-D51	1				
69-D61		LABEL,FUEL WARNING			
KA10-69-D61A	1				
69-014		LABEL,TIRE			
NA01-69-014A	1				

7301 NA35*V-732210

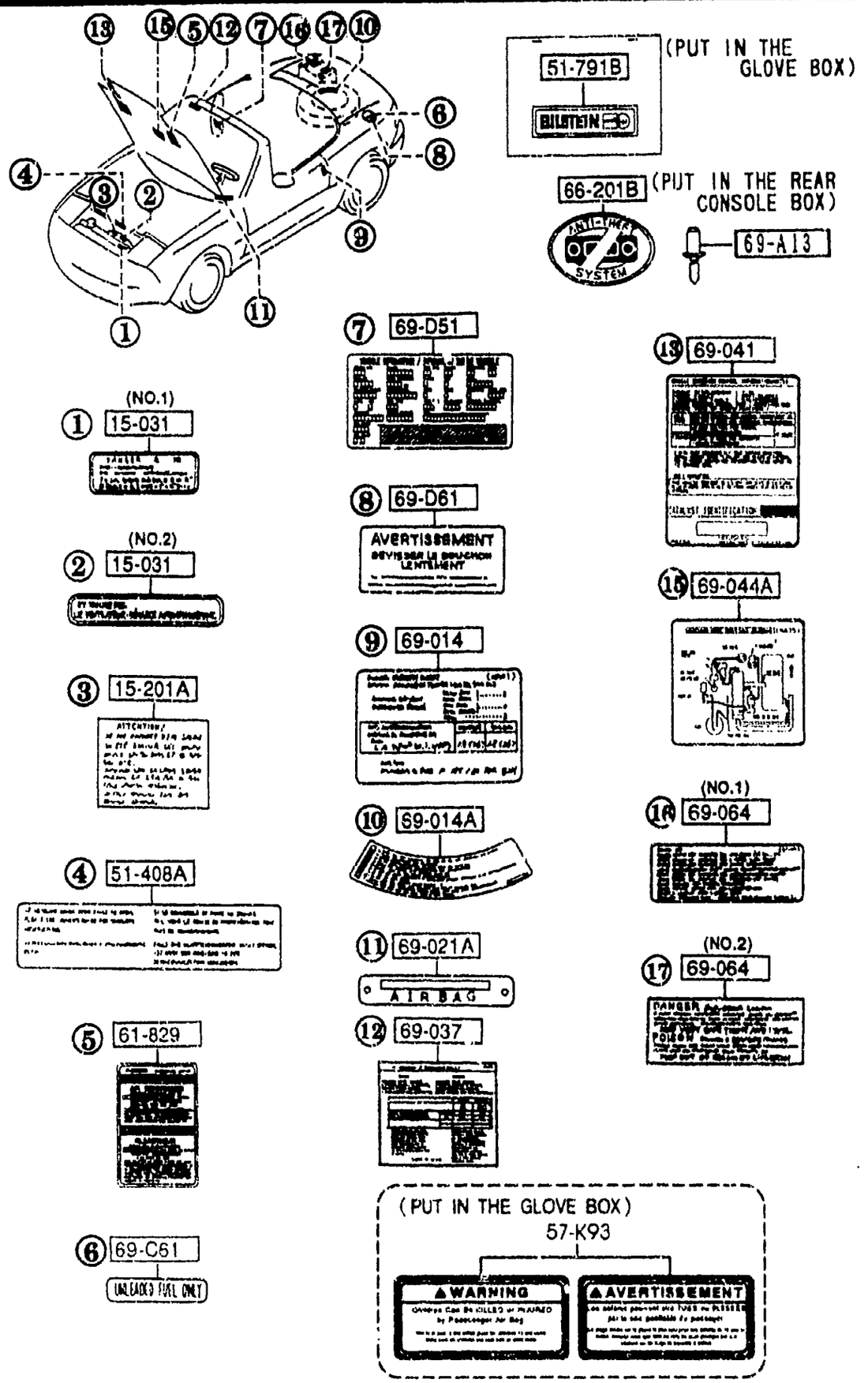

6930 -2 * CAUTION PLATES & LABELS

PART NO.	QTY	MODEL/RESTRICTION	MODEL/RESTRICTION	MODEL/RESTRICTION	FROM-TO
69-014A		LABEL,TEMPORARY TIRE			
BF68-69-073	1	ENGLISH			
BF69-69-073B	1	FRENCH			
69-021A		PLATE,CAUTION			
NA01-69-068A	1				
69-037		LABEL,FUEL ECONOMY			
NB85-69-042	1	(W/FUEL CONSUMPTION LABEL)			
69-041		LABEL,EMISSION			
NB04-69-036	1				
69-044A		LABEL,VAC.DIAPHRAGM			
NB38-69-044	1	(W/VACCUM DIAPHRAGM LABEL)			
69-064		LABEL,BATTERY			
FA03-69-C72A	1	(ILLUST. NO.1)			
FA01-69-064A	1	(ILLUST. NO.2)			

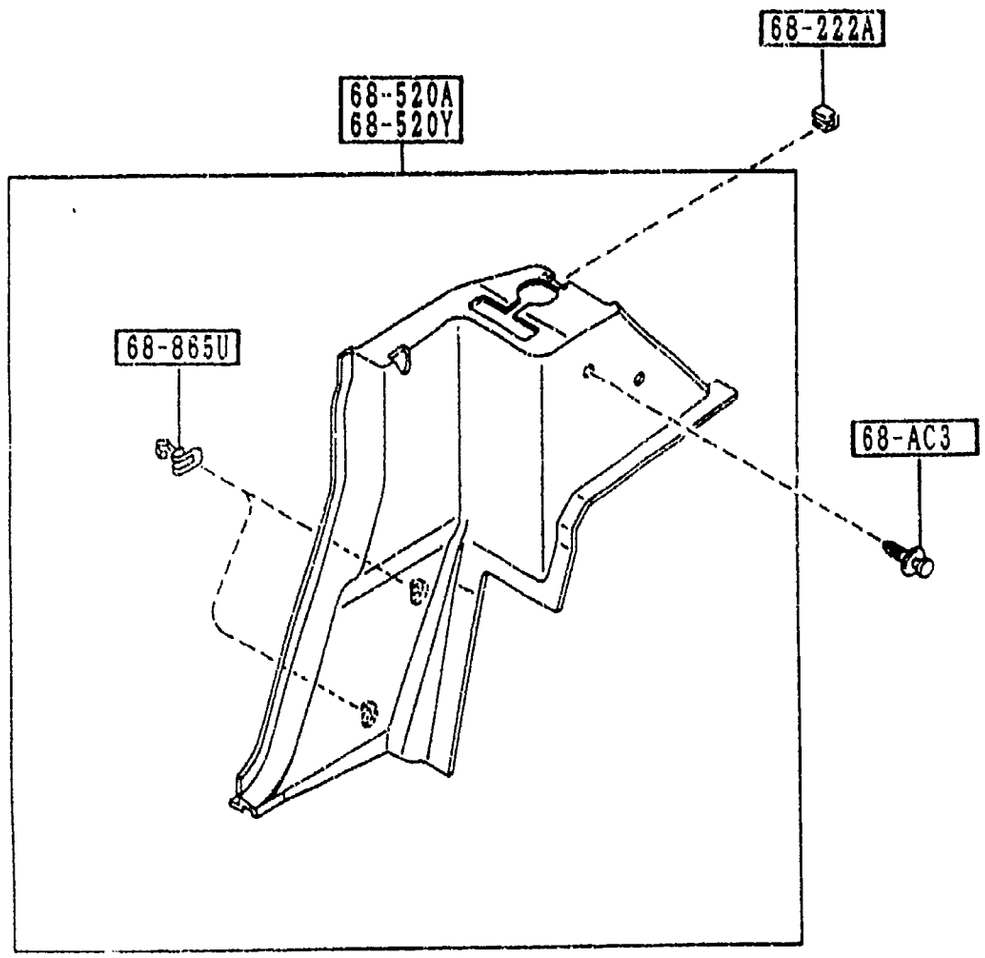

7250 -1 * QUARTER WINDOW & TRIMS

PART NO.	QTY	MODEL/RESTRICTION	MODEL/RESTRICTION	MODEL/RESTRICTION	FROM-TO
68-AC3		FASTENER			
B499-68-AC3	2				
00	INT-	NA3 NA7 NA8 BLACK			
69	INT-	NA4 NA5 TAN			
68-222A		COVER,HOLE			
NA01-68-222A	2				
00	INT-	NA3 NA7 NA8 BLACK			
88	INT-	NA4 NA5 TAN			
68-520A		TRIM(R),QUARTER			
NA75-68-520	1	(W/O DETACHABLE HARD TOP)			
00	INT-	NA3 NA7 NA8 BLACK			
88	INT-	NA4 NA5 TAN			
NA76-68-520	1	(W/DETACHABLE HARD TOP)			
00	INT-	NA3 NA7 NA8 BLACK			
88	INT-	NA4 NA5 TAN			
68-520Y		TRIM(L),QUARTER			
NA75-68-550	1	(W/O DETACHABLE HARD TOP)			
00	INT-	NA3 NA7 NA8 BLACK			
88	INT-	NA4 NA5 TAN			
NA76-68-550	1	(W/DETACHABLE HARD TOP)			
00	INT-	NA3 NA7 NA8 BLACK			
88	INT-	NA4 NA5 TAN			
68-865U		CLIP,TRIM			
GJ21-68-865	4				

PART NUMBER INDEX

This index is listed in the following sequence.

GENERAL PARTS

EXAMPLE

❶ Model/Type
Third, in the sequence of model/type (1st-4th digits)

❷ Group
First, in the sequence of group (5th & 6th digits)

❸ Part
Second, in the sequence of part (7th-9th digits)

INDEX DES NOMBRES DE PIECES

Cet index a été composé selon la séquence suivante.

PIECES GENERALES

EXEMPLE

❶ Modèle/type
Troisièmement, séquence du modèle/type (1er à 4ème chiffres)

❷ Groupe
Premièrement, séquence du groupe (5ème et 6ème chiffres)

❸ Pièce
Deuxièmement, séquence de la pièce (7ème à 9ème chiffres)

NUMERO INDICE DE PIEZA

Este indice se ordena en la siguiente secuencia.

PIEZAS GENERALES

EJEMPLO

❶ Tipo de modelo
Tercero, en la secuencia de tipo de modelo (entre las cifras 1ro-4to lugar)

❷ Grupo
Primero, en la secuencia de grupo (las cifras en 5to y 6to lugar)

❸ Pieza
Segundo, en la secuencia de pieza (entre las cifras 7mo-9no lugar)

TEILENUMMERN

Die Teilenummern setzen sich wie folgt zusammen.

ALLGEMEINE TEILE

BEISPIEL

❶ Modell/Typ
Angabe des Modells bzw. Type (1. bis 4. Ziffer)

❷ Baugruppe
Angabe der Baugruppe (5. und 6. Ziffer)

❸ Teil
Angabe des Teils (7. bis 9. Ziffer)

❶ ❷ ❸
B A 0 1 6 0 3 5 0

STANDARD PARTS

Standard Parts are listed in numerical sequence after General Parts.
(Note: Those parts which do not have D-Code are not listed in the index.)

PIECES STANDARD

Les pièces standard sont énumérées selon une séquence numérique, après les pièces générales.
(Remarque: Les pièces qui ne possèdent pas de code D ne sont pas mentionnées dans cet index.)

PIEZAS NORMALES

Las piezas normales se numeran secuencialmente despues de las Piezas generales.
(Nota: Las piezas que no tienen un codigo D no estan en el indice.)

STANDARDTEILE

Die Standardteile sind nach den allgemeinen Teilen mit fortlaufender Numerierung aufgeführt.
(Hinweis: Teile ohne D-Code sind nind nicht aufgeführt.)

```
*******************
*                 *
*    R1-000       *
*                 *
*******************
```

NA01-R1-100E	3-F5
NA01-R1-131	3-F5
NA01-R1-132	3-F5
NA01-R1-141	3-F5
NA01-R1-142	3-F5
NA01-R1-181	3-F5
NA01-R1-210L	3-F5
NA01-R1-210M	3-F5
NA02-R1-210E	3-F5
NA02-R1-210F	3-F5
NAY1-R1-211	3-F5
NAY2-R1-211	3-F5
NA02-R1-213	3-F5
NA01-R1-230	3-F5
NA01-R1-233	3-G5
NA01-R1-234	3-G5
NA01-R1-235	3-G5
NAY1-R1-240G	3-G5
NAY2-R1-240D	3-G5
NAY1-R1-242	3-G5
NAY1-R1-243	3-G5
NA01-R1-250B	3-G5
NA01-R1-271	3-G5
NA01-R1-272	3-G5
NA01-R1-281	3-G5
NA01-R1-291	3-G5
NA01-R1-310E	3-L5
NA01-R1-310F	3-L5
NA01-R1-310G	3-L5
NA02-R1-310E	3-G5
NA01-R1-311	3-G5
NA01-R1-312	3-H5
NA01-R1-313	3-D6
NA01-R1-313A	3-D6
NA01-R1-313B	3-E6
NA01-R1-320E	3-M5
NA01-R1-320F	3-M5
NA01-R1-320G	3-M5
NA01-R1-331	3-H5
NA01-R1-361D	3-N5
NA02-R1-361D	3-N5
NA01-R1-371D	3-N5
NA02-R1-371D	3-N5
NA01-R1-38XB	3-H5
NA01-R1-381B	3-H5
NA01-R1-382A	3-H5
NA01-R1-391B	3-H5
NA01-R1-411B	3-I5
NA01-R1-411C	3-I5
NA01-R1-412B	3-I5
NA01-R1-412C	3-I5
NA01-R1-413B	3-I5
NA01-R1-413C	3-I5
NA01-R1-421B	3-I5
NA01-R1-421C	3-I5
NA01-R1-422B	3-I5
NA01-R1-422C	3-I5
NA01-R1-423B	3-I5
NA01-R1-423C	3-I5
NA01-R1-461	3-H5
NA01-R1-462	3-H5
NA01-R1-463	3-H5
NA01-R1-471	3-H5
NA01-R1-472	3-H5
NA01-R1-473	3-H5
NA01-R1-491	3-I5
NA01-R1-560C	3-I5
NA01-R1-581B	3-I5
NA01-R1-581C	3-I5
NA01-R1-582A	3-J5
NA01-R1-582B	3-J5
NA01-R1-592A	3-J5
NA01-R1-592B	3-J5
NA01-R1-711B	3-J5
NA01-R1-721B	3-J5
NA01-R1-721C	3-J5
NA01-R1-731B	3-J5
NA01-R1-731C	3-J5
NA01-R1-741B	3-J5
NA01-R1-742C	3-J5
NA01-R1-750E	3-J5
NA01-R1-780C	3-J5
NA01-R1-780D	3-J5
NA01-R1-786A	3-J5
NA01-R1-790C	3-J5
NA01-R1-790D	3-K5
NB40-R1-810 A5	3-K5
NB40-R1-810 HU	3-K5
NB40-R1-810 M8	3-K5
NB40-R1-810 PT	3-K5
NB40-R1-810 PZ	3-K5
NB40-R1-810 SU	3-K5
NB40-R1-810BA5	3-K5
NB40-R1-810BHU	3-K5
NB40-R1-810BM8	3-K5
NB40-R1-810BPT	3-K5
NB40-R1-810BPZ	3-L5
NB40-R1-310BSU	3-L5
NB40-R1-810B23	3-L5
NB40-R1-810B57	3-L5
NB40-R1-810CA5	3-L5
NB40-R1-810CHU	3-L5
NB40-R1-810CM8	3-L5
NB40-R1-810CPT	3-L5
NB40-R1-810CPZ	3-L5
NB40-R1-810CSU	3-L5
NB40-R1-810C23	3-L5
NB40-R1-810C57	3-L5
NA06-R1-82X A5	3-K5
NA06-R1-82X HU	3-K5
NA06-R1-82X M8	3-K5
NA06-R1-82X PT	3-K5
NA06-R1-82X PZ	3-K5
NA06-R1-82X SU	3-K5
NA06-R1-82XBA5	3-K5
NA06-R1-82XBHU	3-K5
NA06-R1-82XBM8	3-K5
NA06-R1-82XBPT	3-K5
NA06-R1-82XBPZ	3-K5
NA06-R1-82XBSU	3-K5
NA06-R1-82XB23	3-K5
NA06-R1-82XB57	3-K5
NA01-R1-832A	3-L5
NA01-R1-861	3-M5
NA01-R1-863	3-M5
NA01-R1-864	3-M5
NA01-R1-865	3-M5
NA01-R1-866	3-M5
NA01-R1-867	3-M5
NA01-R1-868	3-M5
NA01-R1-869	3-M5
NA01-R1-871	3-N5
NA01-R1-874	3-N5
NA01-R1-881B	3-C6
NA01-R1-882	3-N5
NA01-R1-89XA	3-N5
NA01-R1-89XB	3-N5
NA01-R1-891B	3-C6
NA01-R1-892	3-N5
NA01-R1-926	3-C6
NA01-R1-931A	3-N5
NA01-R1-935B	3-N5
NA01-R1-936A	3-N5
NA01-R1-941A	3-C6
NA01-R1-946A	3-C6
B235-R1-953	3-C6
B235-R1-958A	3-C6
NA01-R1-96Z 00	3-C6
NA01-R1-96Z 75	3-C6
NA01-R1-960F66	3-L5
NA01-R1-960F88	3-L5
NA01-R1-960H66	3-L5
NA01-R1-960H88	3-L5
NA01-R1-970A	3-C6
NA01-R1-981A	3-C6
NA01-R1-982B	3-C6

```
*******************
*                 *
*    02-000       *
*                 *
*******************
```

BPF1-02-200A	1-D3
BPF1-02-200B	1-D3
BPS1-02-300	1-D3
8ABA-02-310	1-D3

```
*******************
*                 *
*    09-000       *
*                 *
*******************
```

NA75-09-010F00	2-C10
NA82-09-010D00	2-C10

```
*******************
*                 *
*    10-000       *
*                 *
*******************
```

BPE8-10-100A	1-E3
B661-10-104	1-E3
B660-10-106	1-E3
F801-10-114	1-M3
KL02-10-126	1-E3
B660-10-135A	1-E3
B630-10-138A	1-E3
KL01-10-155	1-M3
KL02-10-155	1-M3
BPE8-10-210C	1-E3
B61P-10-22X	1-E3
B6S7-10-22Y	1-E3
B6S7-10-225	1-E3
B61P-10-227	1-E3
BP05-10-235C	1-E3
8AN2-10-235A	1-D3
BPE8-10-241	1-E3
0453-10-250A	1-F3
0324-10-252	1-F3
BP26-10-271	1-F3
8AN2-10-271B	1-D3
B6Z1-10-280	1-F3
BPY0-10-290	1-F3
BP05-10-300N	1-G3
BP05-10-300P	1-G3
B366-10-305	1-G3
B630-10-306	1-G3
B6F4-10-308	1-H3
BP4W-10-319	1-G3
E5B6-10-319C	1-G3
0221-10-327	1-G3
B630-10-352	1-G3
0290-10-353	1-K7
BPE8-10-40Y	1-H3
BPE8-10-400A	1-H3
BPY0-10-400B	1-H3
B6S7-10-404A	1-H3
B6F4-10-427	1-H3
B6F4-10-428	1-H3
BPE8-10-440	1-G3
BPE8-10-450	1-G3
B6S7-10-465	1-H3
B660-10-501E	1-H3
B61P-10-510	1-H3
B61P-10-512	1-H3
B61P-10-513	1-H3
B61P-10-514	1-H3
B660-10-521B	1-H3
B61P-10-540C	1-I3
B660-10-543B	1-E5
B61P-10-544	1-I3
B660-10-561	1-F3
BPE8-10-566A	1-F3
BP01-10-580A	1-G3
B3C7-10-602A	1-M4
FS05-10-602A	1-I3
SE01-10-730	1-G3
B61P-10-901A	1-I3
B61P-10-901B	1-I3
B64J-10-901	1-I3
B64J-10-903	1-I3

```
*******************
*                 *
*    11-000       *
*                 *
*******************
```

BPY1-11-SA0A	1-K3
BPY1-11-SBXA	1-K3
BPY1-11-SB0A	1-L3
BPY1-11-SC0	1-K3
BPY1-11-SDX	1-K3
BPY1-11-SD0	1-K3
B6Y2-11-SE0A	1-K3
B6Y2-11-SFXA	1-K3
B6Y2-11-SFYA	1-K3
B6Y2-11-SF0A	1-K3
B6Y2-11-SG0	1-K3
B6Y1-11-SHX	1-K3
B6Y1-11-SHY	1-K3
B6Y1-11-SH0	1-K3
B6Y1-11-SJ0	1-L3
B6Y1-11-SKX	1-L3
B6Y1-11-SKY	1-L3
B6Y1-11-SK0	1-L3
0221-11-205	1-J3
B6S7-11-210E	1-J3
B6S7-11-215A	1-J3
BP06-11-300C	1-J3
F801-11-303	1-K3
B366-11-310C	1-I3
BP05-11-312	1-I3
B3C7-11-317	1-J3
B3C7-11-321	1-J3
B6BF-11-400A	1-J3
BPD3-11-401A	1-J3
BPD4-11-401	1-J3
JF01-11-405	1-J3
JF01-11-405A	1-J3
B3C7-11-406	1-J3
B3C7-11-408	1-J3
B6BF-11-408B	1-J3
BPR7-11-500	1-J3
B367-11-502	1-K3
0110-11-502	1-K3
F201-11-511A	1-K3

```
*******************
*                 *
*    12-000       *
*                 *
*******************
```

KL01-12-101B	1-M3
BP06-12-111A	1-M3
BP1B-12-111	1-M3
B6BF-12-113	1-M3
FS01-12-114	1-M3
BP05-12-121A	1-M3
B660-12-123A	1-M3
BP05-12-125	1-M3
B6S7-12-205D	1-M3
BP05-12-420E	1-M3
B6S7-12-425A	1-N3
BP06-12-440C	1-N3
B660-12-700E	1-N3
B660-12-711C	1-N3
B660-12-730C	1-N3

```
*******************
*                 *
*    13-000       *
*                 *
*******************
```

K801-13-W69	1-J4
K801-13-W76	1-J4
B551-13-W8X	1-J4
B6BF-13-W8X	1-J4
K802-13-W8X	1-J4
B6BF-13-W89	1-J4
B61P-13-ZE1	2-H6
FEH2-13-ZE4	2-H6
KL19-13-ZE6	2-H6
BPE8-13-Z01	1-I4
B6S7-13-Z40	1-H4
B61P-13-Z66	1-H4
BPE8-13-100D	1-C4
F8L7-13-104	1-C4
1010-13-104	1-C4
BP05-13-111	1-C4
BPE8-13-121	1-C4
FE4J-13-146	1-E3
BPE8-13-150	1-G4
AZ28-13-157	2-H6
8574-13-157	1-E4
	1-G4
	2-H8
B675-13-158	1-G4
E580-13-161	2-H6
F8B3-13-164	1-G4
BPE8-13-200	1-H4
B6BF-13-215	1-H4
BP06-13-250	1-G4
8574-13-252	1-G4
G601-13-253	1-G4
8574-13-253	1-G4
JE06-13-257	1-G4
KJ01-13-280	1-G4
JE16-13-298	1-E4
F201-13-302A	1-H4
BPE8-13-320	1-H4
SLA1-13-321	1-H4
FE51-13-329	1-H4
BPE8-13-331B	1-H4
E301-13-338A	1-F3
B61P-13-348	1-N6
S501-13-349	1-H4
BPE8-13-35Z	2-H6
BPE8-13-350	2-H6
B61P-13-363A	1-N6
FE51-13-363	1-H4
0222-13-363	3-G6
BPE8-13-380A	1-D4
BPE8-13-390	1-D4
BPS1-13-428A	1-K4
B61P-13-447	1-E4
F801-13-447	1-K4
BPE8-13-450	1-D4
2306-13-456	1-D4
BP05-13-460	1-D4
BPE8-13-49X	1-E4
BPE8-13-495	1-E4
BPR5-13-640	1-J4
B6BF-13-655	1-K4
BPR5-13-665	1-C4
BPE8-13-681	1-K4
BPE8-13-682	1-K4
B61P-13-735	1-N4
BPE8-13-740A	1-F3
BPE8-13-765A	1-H4
BP05-13-890	1-F3
BPE8-13-895	1-F3
B61P-13-960	1-E4
B61P-13-97YA	1-E4
JE16-13-970A	1-E4
B6CA-13-971	1-E4
B6CA-13-972	1-E4
B61P-13-973A	1-E4

```
*******************
*                 *
*    14-000       *
*                 *
*******************
```

B6S8-14-100H	1-M4
FS01-14-115	1-M4
0324-14-116B	1-M4
0222-14-118	1-M4
B6BF-14-121	1-M4
FE1H-14-122A	1-M4
FE1H-14-124	1-M4
B6S7-14-132	1-M4
B6S7-14-141	1-M4
B6BF-14-190	3-G6
BPE8-14-240	1-M4
B6BF-14-248	1-M4
B6Y1-14-302A	1-N4
BPE8-14-700	1-M4
KL01-14-702A	1-M4
N304-14-726	3-H8

```
*******************
*                 *
*    15-000       *
*                 *
*******************
```

B6S8-15-T52	1-C5
B61P-15-T56	1-C5
B595-15-T59	1-C5
8ABB-15-010A	1-C5
B660-15-031	3-C10
E508-15-031	3-C10
B61P-15-106	1-C5
B6BF-15-116	1-C5
E301-15-117	1-C5
B3C7-15-131	1-C5
B61P-15-140A	1-C5
B64J-15-140	1-C5
B61P-15-150B	1-E5
B64J-15-150A	1-E5
B61P-15-160	1-C5
B621-15-165	1-C5
BPE8-15-170A	1-C5
8ABB-15-171	1-D5
BPE8-15-172	1-D5
B621-15-173	1-D5
BPE8-15-179	1-D5
B61P-15-184	1-D5
BPE8-15-185	1-D5
BPE8-15-186	1-D5
B61P-15-190	1-D5
BPE8-15-200	1-D5
BPS9-15-200	1-D5
B791-15-201	3-C10
B61P-15-202	1-D5
N326-15-202	1-D5
NF01-15-203	1-D5
D316-15-205	1-D5
B61P-15-210B	1-E5
B61P-15-240A	2-D12
B61P-15-250A	2-D12
B61P-15-261A	1-C5
BPE8-15-270	1-F3
E301-15-287	1-E5
BPE8-15-290	1-E5
B61P-15-350D	1-E5
B61P-15-355A	1-E5
F201-15-388A	1-E5
BPE8-15-536	1-N4
B68F-15-538	1-E5
	1-K4
	1-N4
B61P-15-547	1-E5
F801-15-713	1-E5
BPE8-15-810A	1-F5
B3C7-15-907C	1-G5
B61P-15-907A	1-G5
BPE8-15-908	1-G5
BPE8-15-909	1-G5
BPE8-15-909A	1-G5
BPF3-15-909	1-G5
BPF3-15-909A	1-G5
BPU1-15-930	1-F5
B631-15-932	1-F5
BP01-15-933	1-F5
E564-15-934	1-F5
BP01-15-940	1-F5
E564-15-942	1-F5
BP01-15-951	1-F5

```
*******************
*                 *
*    16-000       *
*                 *
*******************
```

FE69-16-102A	1-C6
0603-16-102B	1-C6
FE51-16-214A	1-C6
B622-16-220A	1-C6
B626-16-220	1-C6
FE50-16-225A	1-C6
1416-16-232A	1-C6
BP07-16-410	1-C6
BP07-16-460	1-C6
B622-16-510	1-C6
B622-16-520	1-C6
B622-16-520A	1-C6

```
*******************
*                 *
*    17-000       *
*                 *
*******************
```

M526-17-10XA	1-D6
M526-17-10XB	1-D6
M526-17-100A	1-D6
H501-17-103	1-C6
M501-17-103	1-D6
F401-17-121	1-N7
0810-17-121	1-D6
	2-H3
	2-L3
M501-17-140	1-I6
F520-17-171B	1-F6
M516-17-201	1-F6
P502-17-204	1-I6
M501-17-205	1-F6
M501-17-210A	1-F6
M505-17-221B	1-F6
0317-17-225	1-F6
M513-17-231B	1-F6
M513-17-231C	1-F6
M517-17-240	1-F6
M501-17-241C	1-F6
F401-17-242A	1-F6
M502-17-242	1-F6
F401-17-243A	1-G6
F401-17-243C	1-G6
M520-17-251A	1-G6
R504-17-26Y	1-G6
M517-17-260	1-G6
M511-17-261	1-G6
M505-17-262	1-G6
F401-17-264A	1-G6
G401-17-264	1-G6
G501-17-265A	1-G6
M502-17-265C	1-G6
M504-17-265A	1-G6
M516-17-271A	1-G6
0259-17-274A	1-H6
8540-17-275A	1-H6
0259-17-276	1-H6
0259-17-277	1-H6
0259-17-278	1-H6

0259-17-279	1-H6
M513-17-281	1-H6
4069-17-283A	1-G6
4069-17-284E	1-G6
M502-17-295C	1-F6
M502-17-297A	1-F6
M506-17-297	1-H6
M502-17-298A	1-H6
M502-17-299B	1-I6
M528-17-301A	1-H6
M516-17-302	1-H6
M504-17-304	1-H6
0839-17-305B	1-I6
M510-17-308	1-I6
M501-17-309	1-I6
M513-17-310	1-I6
M513-17-310A	1-I6
M501-17-313	1-I6
0305-17-327	1-I6
0305-17-328	1-I6
M5Y1-17-330	1-D6
M507-17-335A	1-D6
	1-N7
M503-17-341	1-I6
M503-17-341A	1-I6
1281-17-341	1-K9
R501-17-351	1-K6
0114-17-351	1-K6
M501-17-370A	1-D6
N451-17-400	1-N7
M503-17-402	1-K6
M501-17-404B	1-K6
M504-17-406A	1-K6
M503-17-411	1-K6
0014-17-411	1-K6
0103-17-411	1-M6
M507-17-412A	1-K6
3648-17-415	1-K6
M501-17-416	1-K6
M504-17-416	1-K6
M505-17-416	1-K6
M504-17-421A	1-K6
M507-17-422A	1-K6
M506-17-431A	1-K6
M508-17-432	1-L6
R502-17-435	1-L6
M510-17-441	1-D6
1669-17-442B	1-D6
1011-17-443	1-D6
	1-N7
M516-17-450A	1-L6
M508-17-461A	1-L6
0398-17-462A	1-L6
R501-17-47X	1-M6
R501-17-47X1	1-M6
M510-17-470	1-L6
M501-17-474	1-L6
0303-17-474	1-L6
M501-17-475	1-L6
M502-17-476A	1-L6
M513-17-480A	1-L6
8AN1-17-481	1-L6
M505-17-482	1-L6
8599-17-482	1-L6
M504-17-490A	1-M6
0183-17-491	1-M6
M501-17-501	1-M6
M524-17-510C	1-M6
M501-17-515	1-K6
M515-17-520 00	1-M6
M517-17-520	1-M6
M518-17-520A	1-M6
0884-17-530	1-D6
M509-17-540	1-D6
M501-17-543A	1-E6
M505-17-552	1-M6
M517-17-611	1-I6
M505-17-620	1-J6
M505-17-621	1-J6
8601-17-629	1-J6
0884-17-632B	1-J6
0884-17-633B	1-J6
0884-17-634B	1-J6
0884-17-635B	1-J6
M506-17-640A	3-G6
8118-17-640B	3-G6
M501-17-651	1-J6
M501-17-652	1-J6
M501-17-653	1-J6
M501-17-654	1-J6
M501-17-655	1-J6
W501-17-724	1-J6
V501-17-725	1-J6
**********	
*	*
* 18-000	*
*	*
**********	
BPE8-18-T51	1-N6
BPE8-18-T52	1-N6
BPE8-18-T53	1-N6
BPE8-18-T54A	1-N6
B3C7-18-W05	1-E7
B3C7-18-W10	1-E7
RF71-18-W20	1-E7
FS05-18-W25	1-D7
RF71-18-W26	1-D7
PN16-18-W27	1-D7
B366-18-W35D	1-E7
F285-18-W35A	1-E7
N336-18-W36	1-D7
JE15-18-W45	1-D7
BPE8-18-W50	1-D7
BPE9-18-W50	1-D7
FS05-18-W51	1-D7
BPE8-18-W60	1-D7
BPE9-18-W60	1-D7
B62P-18-W70	1-D7
B64J-18-W70A	1-D7
B3C7-18-W77	1-D7
BPD3-18-W80	1-E7
BPE9-18-X00	1-K7
B61R-18-X00	1-F7
E356-18-X01	1-I7
F210-18-X01	1-F7
E356-18-X05	1-F7
N326-18-X05	1-H7
BPD4-18-X10	1-I7
E356-18-X10	1-G7
AM15-18-X20	1-H7
AM15-18-X25	1-H7
E356-18-X30	1-F7
N326-18-X30	1-H7
F214-18-X40	1-I7
B630-18-X45	1-F7
F225-18-X56	1-H7
N326-18-X57	1-I7
AM15-18-X60	1-H7
B6SB-18-X60	1-F7
N326-18-X62A	1-H7
B61R-18-X65	1-F7
JF01-18-X65	1-H7
B630-18-X66	1-G7
B660-18-X66	1-G7
F2D4-18-X66	1-I7
B61R-18-X70	1-G7
F2D4-18-X70	1-I7
E356-18-X80	1-F7
JF01-18-X80A	1-H7
E356-18-X81	1-F7
N326-18-X87	1-I7
B630-18-X90	1-F7
N326-18-X91	1-H7
E356-18-X92	1-F7
N326-18-X93	1-I7
E356-18-X95	1-F7
	1-H7
BPE8-18-10XB	1-N6
BP01-18-110	1-N6
BF02-18-110	1-N6
BP03-18-110	1-N6
BP04-18-110	1-N6
BPE8-18-140A	1-N6
E356-18-141	3-J6
B61P-18-2F0B	3-H6
BPS1-18-211	3-G6
BPS1-18-221	3-G6
BPE8-18-230	3-G6
B6BF-18-28Y	3-G6
BPE8-18-281A	3-G6
HE21-18-291	1-K4
BPE8-18-300	1-D7
BPE9-18-300	1-D7
BPE9-18-300A	1-D7
B6BF-18-361C	1-N6
FP01-18-363	1-N6
FP02-18-363	1-F5
B596-18-381	1-C7
	1-G5
B6BF-18-381	1-G5
	1-N6
BPE9-18-400	1-H7
B61R-18-400A	1-F7
B6BG-18-401A	1-C7
BPE8-18-410	1-C7
B660-18-411C	1-C7
B367-18-501	3-G6
B541-18-51X	3-G6
KL01-18-51X	3-G6
B6AC-18-520	1-J7
B61P-18-524	1-J7
B61P-18-526	1-J7
BPE8-18-730A	3-G6
BPE8-18-74XA	3-G6
B69N-18-740	1-K4
FS05-18-741	1-K4
F2L3-18-741	3-H6
F2L4-18-741	3-H6
JE16-18-741	3-H6
B5R4-18-811	3-H6
B577-18-821A	3-H6
BPS1-18-835A	3-H6
BPS2-18-835	3-H6
BPE8-18-836B	3-H6
B593-18-840A	3-H6
BP3A-18-861	3-H6
BP3B-18-861	3-H6
BPE8-18-867A	3-H6
B366-18-867A	3-H6
BP3A-18-881A	3-H6
BP3A-18-881B	3-I6
BPE8-18-882	3-I6
BPS1-18-883	3-I6
BP3A-18-9E1	3-I6
JE50-18-911	1-J4
NA75-18-945B	2-C7
BPE8-18-998B	3-I6
BPS1-18-998B	3-I6
**********	
*	*
* 19-000	*
*	*
**********	
N451-19-012A	3-I6
BU55-19-020	1-K7
FA01-19-025	1-K7
FU60-19-025	1-K7
BU55-19-031	1-N9
FT31-19-063	1-K7
FT31-19-064	1-K7
FU51-19-065	1-K7
N451-19-090C	1-K7
N451-19-090D	1-K7
N451-19-090E	1-K7
BU55-19-100	1-K7
N451-19-100	1-K7
BU55-19-211	1-K7
BU46-19-215	1-K7
BU01-19-216	1-K7
BU55-19-217	1-L7
N451-19-220	1-L7
N451-19-220A	1-L7
0338-19-223A	1-L7
0338-19-255	1-L7
BU01-19-256	1-N7
BU01-19-257	1-N7
0338-19-258	1-L7
BU55-19-3C8	1-L7
BU46-19-3J4	1-C8
N451-19-310	1-N7
0338-19-331A	1-N7
0338-19-336	1-K9
0338-19-337	1-K9
0338-19-338	1-K9
0338-19-341	1-N7
0338-19-360B	1-D9
0338-19-361B	1-N7
BU10-19-363	1-N7
FT40-19-363	1-N7
BU20-19-368	1-N7
BV03-19-381	1-C8
N451-19-381	1-C8
BU10-19-384	1-C8
BU55-19-384	1-C8
BU05-19-385	1-C8
0842-19-385	1-C8
0338-19-386A	1-C8
0338-19-388A	1-C8
0338-19-389	1-C8
N451-19-391	1-C8
1758-19-392A	1-C8
0842-19-394	1-C8
0338-19-395	1-C8
1758-19-397	1-C8
0338-19-398	1-D8
BU67-19-431	1-N9
0338-19-432	1-N9
BU56-19-440	1-N9
N451-19-444	1-N9
	3-I6
0338-19-446	3-I6
0338-19-449	1-N9
BU17-19-450	1-N9
N451-19-460	1-D9
N451-19-460A	1-D9
N451-19-470	1-D9
N451-19-470A	1-D9
0338-19-475	1-D9
BV01-19-476	1-D9
0338-19-476	1-D9
BV01-19-480	1-D9
0338-19-480	1-D9
0338-19-486	1-D9
0338-19-487	1-D9
0338-19-488	1-D9
BU17-19-498	1-D9
0338-19-498	1-D9
FT01-19-499	1-D9
0338-19-499	1-E9
BU55-19-5J0	1-E9
BU17-19-500A	1-E9
0338-19-503	1-E9
BU17-19-504	1-E9
BU17-19-505	1-E9
N451-19-505	1-E9
BU17-19-506	1-E9
BV02-19-506	1-E9
BU17-19-507	1-E9
BV02-19-507	1-E9
3959-19-507	1-E9
BU17-19-508	1-E9
BV02-19-508	1-E9
3959-19-508	1-E9
BU17-19-509	1-E9
BV01-19-509	1-E9
0338-19-509	1-F9
3959-19-509	1-E9
BU17-19-510A	1-F9
1758-19-511A	1-F9
BV11-19-527	1-I8
0338-19-530	1-F9
0338-19-531	1-F9
BV01-19-533	1-F9
0338-19-533A	1-F9
	1-K9
BU03-19-534	1-F9
0338-19-534	1-F9
	1-K9
0338-19-540	1-F9
0338-19-560	1-F9
BU27-19-565	1-F9
0338-19-567	1-F9
0338-19-570	1-F9
0338-19-580	1-K9
0338-19-581	1-K9
0338-19-590	1-K9
0338-19-591	1-K9
0338-19-593	1-K9
0338-19-594	1-K9
0338-19-595	1-K9
0338-19-596	1-K9
0338-19-598	1-G9
BV01-19-6C1	1-G9
BV03-19-6C1	1-H9
BV01-19-6C2	1-G9
BV03-19-6C2	1-H9
BV01-19-6C3	1-G9
BV03-19-6C3	1-H9
BV01-19-6C4	1-G9
BV03-19-6C4	1-H9
BV01-19-6C5	1-G9
BV03-19-6C5	1-H9
BV01-19-6C6	1-G9
BV03-19-6C6	1-H9
BV01-19-6C7	1-H9
BV03-19-6C7	1-H9
BV01-19-6C8	1-H9
BV03-19-6C8	1-H9
BT08-19-600	1-L9
0338-19-603	1-L9
0338-19-604	1-L9
0338-19-606	1-L9
0338-19-607	1-L9
0338-19-609	1-L9
BU17-19-610	1-L9
0338-19-613A	1-L9
0338-19-614A	1-L9
0338-19-615A	1-L9
0338-19-616A	1-L9
0338-19-617A	1-L9
0338-19-618A	1-L9
0338-19-619	1-L9
0338-19-621	1-G9
BU91-19-622	1-G9
	1-L9
FT01-19-622	1-G9
	1-L9
0338-19-623A	1-G9
0338-19-624	1-G9
0338-19-631	1-G9
0338-19-632	1-G9
0338-19-633	1-G9
0338-19-634	1-G9
0338-19-635	1-G9
0338-19-636	1-G9
BV01-19-650	1-M9
BV01-19-655	1-M9
BU55-19-670	1-M9
0338-19-676	1-M9
BUY2-19-7A0	1-D8
BU17-19-701	1-D8
	1-N9
0338-19-702A	1-D8
	1-N9
BU17-19-703	1-D8
	1-N9
BU17-19-704	1-D8
BU17-19-704	1-N9
0338-19-706	1-D8
	1-N9
0338-19-731	1-N9
BU17-19-732	1-N9
0338-19-733C	1-C10
0338-19-734A	1-C10
BT28-19-735	1-D8
BV12-19-737	1-D8
BV36-19-737	1-D8
BV40-19-739	1-D8
N451-19-750	1-I8
BV01-19-760F	1-I8
BU91-19-768	1-I8
BV01-19-771	1-I8
0338-19-772	1-I8
0338-19-773	1-I8
N451-19-774	1-I8
N451-19-775	1-I8
1758-19-781	1-I8
BV01-19-785	1-I8
N451-19-787	1-I8
N451-19-788	1-I8
0338-19-791A	1-I8
BV01-19-792	1-J8
BV01-19-793	1-J8
N451-19-795	1-J8
BV01-19-797A	1-J8
N451-19-798	1-J8
BV01-19-8A2	1-J8
BV01-19-8A3	1-J8
BV01-19-8A4	1-J8
BV01-19-8B2	1-J8
BV01-19-8B4	1-J8
BV01-19-803	1-J8
BV17-19-805	1-J8
0338-19-808	1-J8
BV02-19-811C	1-J8
BV01-19-812A	1-K8
0338-19-814	1-K8
BV01-19-815	1-K8
BV01-19-819	1-K8
0338-19-822	1-D8
BT07-19-823	1-D8
BU55-19-825	1-D8
0338-19-825	1-E8
0338-19-826	1-E8
0338-19-827	1-E8
0338-19-828	1-E8
0338-19-829	1-E8
BU91-19-833	1-E8
BT28-19-835	1-E8
BV02-19-836	1-E8
0338-19-837	1-E8
BU27-19-838	1-M7
1758-19-838A	3-I6
BU55-19-870	1-E8
BV55-19-880A	1-E8
BU55-19-890	1-E8
0338-19-904A	1-L7
BU55-19-910A	1-L7
0436-19-917	1-L7
N451-19-920	1-L7
N452-19-930	1-L7
BU55-19-933A	1-L7
BU55-19-934A	1-M7
BU55-19-970A	1-M7
BU29-19-980	1-M7
BU55-19-980A	1-E8
BU29-19-985	1-M7
BV01-19-986	1-E8
**********	
*	*
* 20-000	*
*	*
**********	
Z502-20-WA4	2-D6
B61P-20-211	1-H4
B6BF-20-300	1-K4
JE27-20-305A	1-K4
JE06-20-306	1-K4
BPE8-20-310	1-K4
B61P-20-361	1-E4
BPE8-20-371	1-E4
BPS1-20-381	1-K4
BPE8-20-390	1-L4
BPE8-20-461	1-L4
B612-20-468	2-D8
	3-H8
B61P-20-490	1-E4
BPS1-20-600	2-D6
B6BF-20-660	1-J4
BPE8-20-820	1-F3
**********	
*	*
* 21-000	*
*	*
**********	
FU01-21-097	1-K8
BV01-21-129	1-K8
BV01-21-149A	1-K8
N451-21-154	1-K8
BV01-21-195	1-K8
BV01-21-196	1-K8
BU46-21-2F3	1-F8
BV09-21-2K0	1-F8
N451-21-201	1-K8
BV06-21-202	1-K8
N451-21-211	1-K8
BV01-21-213	1-K8
BV02-21-215	1-L8
BV01-21-216	1-L8
BV01-21-217	1-L8
N451-21-221	1-L8
BV02-21-222B	1-L8
BV01-21-228A	1-F8
BV01-21-229A	1-L8
BV01-21-250A	1-F8
BU01-21-255	1-F8
BV01-21-261	1-L8
N451-21-261	1-L8
N451-21-262	1-L8
N451-21-263	1-L8
N451-21-264	1-L8
FU01-21-265C	1-L8
BU01-21-273	1-F8
BU01-21-277	1-F8
BV01-21-280A	1-L8
BU01-21-294	3-I6
BU01-21-295	3-I6
BV01-21-296	1-L8
BV01-21-297	1-M8
BV01-21-299	1-M8
BV02-21-3A0A	1-M8
N451-21-3A5	3-I6
N451-21-3B1	1-F8
BU46-21-3C2	1-F8
BV01-21-301	1-F8
BV01-21-302	1-F8
BV02-21-302	1-M8
DV01-21-303	1-F8
BV01-21-305B	1-M8
BV01-21-306	1-M8
BV01-21-330	1-F8
BV01-21-333	1-M8
BU01-21-386	1-F8
BV02-21-391	1-G8
BU01-21-395	1-G8
BV01-21-446	1-M8
BU67-21-465	1-C10
BV01-21-5A1	1-H9
BV01-21-5A2	1-H9
BV01-21-5A3	1-H9
BV01-21-5A4	1-H9
BV01-21-5A5	1-H9
N451-21-5C0	1-M7
BV01-21-510B	1-H9

BU05-21-525 1-E9
BU05-21-526 1-E9
BV01-21-530C 1-H9
BV01-21-533 1-I9
BV01-21-534 1-I9
BV01-21-535 1-H9
BV01-21-536 1-I9
BV01-21-540B 1-I9
N451-21-550A 1-G8
BV01-21-560 1-I9
BU03-21-565 1-I9
BU03-21-567 1-I9
BV01-21-570A 1-I9
BU01-21-631 1-I9
BU01-21-632 1-I9
BU01-21-633 1-I9
BU01-21-634 1-I9
BU01-21-635 1-I9
BU01-21-636 1-I9
BU01-21-677 1-M7

N451-21-678 1-L7
BU01-21-679 1-I9
BV01-21-681 1-M8
BV01-21-682 1-M8
BV01-21-684 1-M8
BV01-21-797 1-M8
BV01-21-798 1-M8
BV01-21-814 1-M8
BV01-21-816 1-N8
BV01-21-821A 1-I9

****
* *
* 22-000 *
* *
****

MD02-22-510A 2-D3
MD03-22-510A 2-D3
MD03-22-510B 2-D3

MD02-22-520A 2-D3
M090-22-530 2-D3
M090-22-540 2-D3
M090-22-550 2-D3
N451-22-900 1-D10

****
* *
* 24-000 *
* *
****

0222-24-752A 1-G7

****
* *
* 25-000 *
* *
****

MF04-25-100 2-C3
P011-25-123 2-C3
1368-25-124 2-C3
G003-25-421 2-D3
MD02-25-500B 2-D3
MD03-25-500B 2-D3
MD03-25-500C 2-D3

****
* *
* 26-000 *
* *
****

0730-26-060 2-H3
2-L3
B455-26-071 2-E5
NA75-26-130 2-E3
NA80-26-130 2-E3
NA75-26-140 2-E3

NA80-26-140 2-E3
0603-26-161 2-K5
BR74-26-251B 2-E3
BR74-26-251D 2-E3
BR74-26-251E 2-E3
B530-26-261B 2-E3
NA75-26-28X 2-F3
NA75-26-29X 2-F3
NAY5-26-43ZA 2-F3
NAY1-26-46ZA 2-F3
NAY5-26-48Z 2-G3
BCYF-26-49Z 2-G3
NA75-26-61XB 2-F3
BW0H-26-668 2-F3
BW0H-26-669 2-F3
BW0H-26-680 2-F3
BW0H-26-691 2-G3
GA2E-26-692 2-F3
BW0H-26-696 2-F3
BW0H-26-700 2-F3

NA75-26-71XB 2-F3
NA75-26-731 2-F3
BW0H-26-733 2-F3
BC1F-26-800A 2-G3
BR76-26-800A 2-G3
BC1F-26-810A 2-G3
BR76-26-810A 2-G3
BW0H-26-812 2-G3
GA2E-26-816 2-G3
BW0H-26-851 2-G3
BW0H-26-861 2-G3
NAZ5-26-98ZB 2-G3
NAZ5-26-99ZB 2-G3
BW0H-26-998A 2-G3

****
* *
* 27-000 *
* *
****

0223-27-012 2-H3
2-L3
0223-27-030 2-H3
2-L3
MA02-27-100 2-H3
MA03-27-100A 2-H3
MM03-27-100 2-L3
MM05-27-100 2-L3
M068-27-110A 2-H3
2-L3
M068-27-110B 2-H3
2-L3
MA02-27-120A 2-H3
MA03-27-120A 2-H3
2-L3
MA02-27-150A 2-H3
2-L3
MA02-27-158 2-I3
2-L3
T020-27-158A 2-H3

2-L3
2-M3
MA02-27-159 2-I3
2-M3
MA02-27-165A 2-H3
2-L3
M035-27-171 2-I3
2-M3
MM02-27-200A 2-M3
MM03-27-200 2-M3
M025-27-210 2-H3
2-L3
0755-27-210 2-H3
2-L3
M069-27-231 2-I3
8051-27-235 2-I3
2-M3
8051-27-236 2-I3
2-M3
MA02-27-238 2-I3

MA02-27-238 2-M3
M069-27-251 2-I3
0290-27-252 2-I3
0290-27-253 2-I3
0290-27-254 2-I3
M025-27-255C 2-I3
M025-27-256 2-I3
0290-27-256 2-I3
0290-27-259 2-I3
M025-27-261A 2-I3
0114-27-262 2-J3
0290-27-301 2-J3
2-M3
0290-27-302 2-J3
2-M3
0221-27-350 2-J3
2-M3
0223-27-401A 2-J3
2-M3
0223-27-402A 2-J3

2-M3
0223-27-403A 2-J3
2-M3
0223-27-404A 2-J3
2-M3
0223-27-405A 2-J3
2-M3
0223-27-406A 2-J3
2-M3
0223-27-407A 2-J3
2-N3
0223-27-408A 2-J3
2-N3
0223-27-409A 2-J3
2-N3
0223-27-411A 2-J3
2-N3
0223-27-412A 2-J3
2-N3
0223-27-413A 2-J3

2-N3
0223-27-414A 2-J3
2-N3
0223-27-415A 2-J3
2-N3
0223-27-416 2-J3
2-N3
0223-27-417 2-K3
2-N3
0223-27-418 2-K3
2-N3
0223-27-419 2-K3
2-N3
0223-27-422 2-K3
2-N3
0223-27-423 2-K3
2-N3
0223-27-424 2-K3
2-N3
0223-27-425 2-K3

2-N3
0223-27-426 2-K3
2-N3
0223-27-427 2-K3
2-N3
0223-27-428 2-K3
2-N3
PA01-27-431 2-K3
2-N3
0223-27-433 2-K3
2-N3
0223-27-434 2-K3
2-N3
MA02-27-600A 2-C4
2-K3
M053-27-604 2-C4
2-K3
M053-27-605 2-C4
2-K3
M0A1-27-609A 2-C4

M0A1-27-609A 2-K3

****
* *
* 28-000 *
* *
****

NA01-28-011C 2-D4
NA03-28-011A 2-D4
N021-28-011 2-D4
G030-28-013A 2-D4
2-G5
B037-28-091 2-F4
FB01-28-091A 2-G5
NA01-28-092 2-F4
NA01-28-111 2-D4
NA01-28-113 2-F4
N023-28-151 2-E4
FB01-28-155 2-E4

N023-28-156 2-E4
NA01-28-2A0B 2-F4
NA01-28-300 2-F4
H001-28-333 2-D4
2-G5
NA01-28-350 2-F4
NA01-28-380B 2-D4
2-G5
NA01-28-4B0 2-F4
NA01-28-4D0 2-F4
H266-28-448 2-G5
NA01-28-460 2-F4
NA80-28-473 2-F4
2-G5
NA80-28-66ZB 2-F4
2-G5
N018-28-700B 2-D4
N023-28-700B 2-D4
NA01-28-8C0B 2-F4
NA75-28-800 2-G4

NA75-28-800A 2-G4
N007-28-845A 2-H13
NA01-28-880B 2-G4
GJ21-28-89X 2-E12
NA01-28-890 2-C4
2-K3

****
* *
* 32-000 *
* *
****

NA75-32-AZ1 2-I4
NA01-32-AZ2A 2-I4
NA01-32-019 2-H4
NA01-32-049 2-H4
NA01-32-090C 2-I4
NA01-32-090D 2-I4
NA02-32-090C 2-I4

NA02-32-090D 2-I4
B455-32-099 2-I4
B455-32-099A 2-I4
NA75-32-100A 2-I4
NA02-32-11X 2-L4
NA01-32-110 2-J4
NB38-32-110B 2-L4
GJ21-32-111 2-J4
NB38-32-112 2-L4
G030-32-115 2-J4
NA02-32-115 2-L4
NB39-32-115 2-L4
BF67-32-116 2-J4
NA01-32-118 2-J4
NA01-32-119 2-J4
NB38-32-119 2-L4
NA01-32-12X 2-J4
NA01-32-120 2-J4
NB38-32-120 2-L4
NA01-32-122 2-J4

NA01-32-123 2-J4
NA02-32-123 2-L4
NA01-32-124 2-J4
NA02-32-124 2-L4
NB38-32-125 2-L4
G030-32-126 2-J4
NA02-32-126 2-L4
NB38-32-126 2-L4
G030-32-127 2-J4
HE01-32-129 2-J4
NA02-32-129 2-L4
NA02-32-131 2-L4
NB38-32-132 2-L4
BC51-32-133 2-K4
NB38-32-133 2-M4
D002-32-134 2-M4
NA01-32-134 2-K4
G030-32-136 2-K4
S030-32-137 2-K4
S083-32-137 2-K4

HA14-32-146 2-K4
NB38-32-146 2-M4
G030-32-147 2-K4
NA02-32-153 2-M4
NB38-32-154 2-M4
NB38-32-180 2-M4
HE01-32-201 2-K4
HE09-32-201 2-K4
NA01-32-217 2-I4
B456-32-230A 2-N4
B456-32-230B 2-N4
B456-32-230C 2-N4
NA01-32-240 2-K4
NA02-32-240 2-M4
B455-32-279 2-K4
2-M4
8AN1-32-280 2-K4
2-M4
NB38-32-380 2-M4
NB38-32-450 2-M4

NB39-32-450 2-M4
NB38-32-480A 2-M4
NA02-32-490C 2-N4
N002-32-5M0A 2-N4
N002-32-600D 2-N4
N002-32-600E 2-N4
N002-32-600F 2-N4
NA02-32-609 2-N4
N002-32-609 2-N4
N002-32-610A 2-N4
N002-32-613 2-N4
N002-32-613A 2-N4
B456-32-615 2-N4
B456-32-615A 2-N4
B456-32-616 2-N4
NA02-32-680 2-C5
NB11-32-682 2-C5
NA02-32-684B 2-C5
NB11-32-690 2-C5
NA02-32-691 2-C5

NA01-32-750 2-H4
NA01-32-850B 2-I4
G030-32-961 2-K4
2-M4
NA01-32-980D 2-H4
NA02-32-980D 2-H4

****
* *
* 33-000 *
* *
****

NA01-33-021B 2-E5
NA23-33-021B 2-E5
NA01-33-031B 2-E5
NA23-33-031B 2-E5
NA01-33-04X 2-E5
NA23-33-04XA 2-E5
D06Y-33-042 2-E3

D06Y-33-042 2-E5
B455-33-047C 2-E3
H260-33-048 2-E3
B01A-33-060A 2-E3
B01Y-33-062 2-E3
B455-33-062 2-E5
G304-33-065 2-E3
NAY5-33-23ZA 2-F5
NA75-33-25X 2-E5
NA75-33-25XB 2-E5
NA75-33-25XC 2-E5
NAY5-33-26Z 2-F5
NA75-33-261 2-E5
NA75-33-271 2-E5
NAY5-33-28Z 2-F5
NA75-33-281 2-F5
NA75-33-291 2-F5
BC4C-33-471 2-E3
NA23-33-471B 2-E5
NA75-33-61X 2-F5

B001-33-691 2-F5
GA5R-33-691 2-E6
0259-33-691 2-E6
0259-33-693 2-E6
2-E10
2-F5
2-G3
NA75-33-71X 2-F5
NAZ5-33-98Z 2-F5
NAZ5-33-99Z 2-F5

****
* *
* 34-000 *
* *
****

B214-34-C10 3-H8
NA03-34-011 2-G5
NA81-34-011 2-G5

NA01-34-019 2-G5
NA01-34-09XA 2-J5
FB01-34-091 2-G4
2-J5
N021-34-111 2-D4
2-G5
NA01-34-112 2-G5
NA01-34-117A 2-G5
NA75-34-151 2-J5
NA80-34-151 2-J5
FB01-34-155 2-J5
NA01-34-156A 2-J5
NA75-34-156 2-J5
NA01-34-170 2-E4
2-J5
NA01-34-200A 2-G5
2-H5
NA23-34-200 2-G5
8871-34-222 2-C6
2-G4

NA23-34-250 2-H5
NA75-34-300A 2-H5
N040-34-300 2-H5
N040-34-300C 2-H5
NA75-34-350A 2-H5
N040-34-350 2-H5
N040-34-350C 2-H5
NA01-34-460A 2-H5
NA01-34-480A 2-I5
NA01-34-490 2-I5
NA01-34-548 2-I5
NA01-34-550 2-I5
NA01-34-550B 2-I5
NA53-34-700B 2-I5
N018-34-700B 2-I5
N023-34-700D 2-I5
NA01-34-800D 2-J5

****
* *
* 37-000 *
* *
****

B002-37-160 2-K5
M011-37-190 2-K5
B455-37-191 2-K5
EA02-37-192 2-K5
M011-37-192 2-K5
TB50-37-192A 2-K5
8BN4-37-600 2-M5
B455-37-790A 2-M5
GJ21-37-810 2-M5

****
* *
* 39-000 *
* *
****

NA75-39-021 2-C6
NA75-39-030 2-C6
B001-39-037B 2-F4
2-G4
2-I5
NA01-39-040A 2-C6
NA01-39-041A 2-C6
NA01-39-710A 2-C6
NA03-39-710A 2-C6
MC10-39-710A 2-C6
NC13-39-710A 2-C6
NA01-39-721 2-C6
NA01-39-722 2-C6
NA01-39-723 2-C6
NA01-39-724 2-C6
NA01-39-730A 2-C6

****
* *
* 40-000 *
* *
****

RF03-40-061 2-D6
B690-40-080A 2-D6
BPA5-40-100 2-D6
BPA5-40-100B 2-D6
BPA6-40-100 2-D6
BPA6-40-100B 2-D6
B690-40-305 2-D6
JE10-40-355 2-D6
B6A5-40-356 2-D6
B690-40-356 2-D6
B690-40-450 2-D6
BP56-40-500B 2-D6

****
* *
* 41-000 *
* *
****

0727-41-023 2-L6
NA01-41-030D 2-L6
0727-41-061 2-L6
NA01-41-070B 2-L6
BR70-41-081 2-L6
B092-41-081 2-C7
2-M6
B104-41-114 2-G6
NA01-41-130A 2-G6
0824-41-131 2-L6
NA01-41-140B 2-L6
0750-41-308 2-F8
H266-41-341 2-E6
NA75-41-360 2-F6
NA75-41-360A 2-F6
NA02-41-370 2-F6
NA75-41-370 2-F6
NA01-41-390 2-F6

NA01-41-400A 2-E6
NA01-41-443 2-C7
2-L6
B312-41-470 2-E6
NA01-41-610B 2-G6
NA02-41-610B 2-G6
NA01-41-619 2-G6
0259-41-644 2-G6
NB15-41-660 2-G6
B092-41-661 2-G13
3-E7
1456-41-682 2-C7
2-L6
NA01-41-920 2-E6

****
* *
* 42-000 *
* *
****

B596-42-045 2-H6
0866-42-046 2-H6
NA75-42-110 2-H6
NA01-42-210A 2-H6
NA01-42-233 2-I6
NA75-42-240 2-H6
NA01-42-241C 2-H6
NA01-42-249B 2-I6
NB38-42-250 2-I6
H260-42-270 2-I6
NA01-42-291C 2-I6
NA01-42-291D 2-I6
0866-42-366B 2-H6
NA01-42-410B 2-K6
H043-42-431D 2-K6
B048-42-453 3-J8
3-L8
NA75-42-561 2-I6
NA03-42-562 2-I6
NA75-42-564 2-I6

NA75-42-76X 2-J6
NA01-42-761 2-J6
NA01-42-762 2-J6
NA75- 2-762 2-I6
NA01-42-77X 2-I6
NA01-42-771 2-J6
NA01-42-772 2-J6
GN51-42-795 2-J6
GA5R-42-910 2-I6
NA75-42-910 2-I6
BC1M-42-980A 2-I6

****
* *
* 43-000 *
* *
****

B092-43-028 2-L6
0268-43-028 2-C7

B001-43-029 2-C7
2-L6
G030-43-029 2-I6
NA01-43-030B 2-M6
NA03-43-030B 2-C7
NA01-43-041 2-C7
2-M6
0866-43-062 2-C7
2-M6
BR70-43-065 2-M6
NA01-43-070B 2-C7
2-M6
NA01-43-070C 2-C7
2-M6
NA02-43-070B 2-C7
2-M6
NA02-43-070C 2-C7
2-M6
NA03 43-090 2-D7
NA03-43-090A 2-D7

HF23-43-099 2-D7
1524-43-141 2-D7
2-M6
D001-43-152 2-D7
2-J8
2-M6
FB02-43-152A 2-J8
B180-43-302 2-M6
NB13-43-310A 2-D8
NB86-43-310A 2-D8
NB86-43-320A 2-D8
NB86-43-320B 2-D8
NB86-43-320C 2-D8
NB13-43-321A 2-D8
NA01-43-360A 2-I7
NA23-43-360A 2-L7
NA01-43-370 2-I7
NA23-43-370A 2-L7
NA01-43-40Z 2-E7
NA23-43-40ZA 2-H7

D1Y2-43-41Z 2-H7
H001-43-443 2-E7
2-G7
NA75-43-481 2-E7
2-G7
EA03-43-504B 2-D8
W023-43-504 2-D8
2-E7
2-G7
HG83-43-505 2-D8
W023-43-505 2-D8
2-E7
2-G7
HG83-43-506 2-D8
NA23-43-515 2-H7
GA97-43-540 2-E7
2-G7
3597-43-542 2-E7
2-G7
B2Y6-43-55X 2-F7

NAY3-43-55X 2-G7
G309-43-607 2-I7
2-L7
BW0A-43-61Z 2-F7
BW0A-43-62Z 2-F7
NA23-43-625 2-H7
BW0A-43-63Z 2-F7
NA23-43-63Z 2-H7
W023-43-635A 2-F6
2-F8
2-I7
2-L7
0136-43-635 2-F6
NA01-43-640 2-E7
2-G7
NA01-43-670A 2-I7
2-L7
NA01-43-670B 2-I7
2-L7
NA01-43-670C 2-I7

2-L7
B001-43-694A 2-I7
2-L7
NB13-43-7A0B 2-D8
NB86-43-7A0A 2-D8
NB86-43-7A0B 2-D8
HG82-43-7A2 2-D8
NA23-43-7A3 2-D8
HG82-43-7A4 2-D8
NA23-43-7A8 2-E8
H415-43-7A9 2-E8
NA23-43-70XE 2-E8
NA23-43-705 2-E8
NA23-43-71YB 2-E8
NA23-43-72YB 2-E8
NA23-43-73XE 2-E8
NA02-43-750A 2-E7
2-G7
NB86-43-780B 2-E8
NB86-43-780D 2-E8

NB84-43-780E 2-E8
NB86-43-780F 2-E8
NB86-43-780G 2-E8
NA75-43-800 2-E7
NA80-43-800 2-G7
NA75-43-810 2-I7
2-L7
NA75-43-810A 2-I7
2-L7
NA75-43-820 2-I7
2-M7
NA75-43-820A 2-J7
2-M7
NA01-43-850A 2-E7
NA23-43-930B 2-G7
F123-43-900 2-L7
H380-43-900 2-I7
NA75-43-980 2-I7
2-L7
NA75-43-980A 2-I7
2-L7
NA75-43-990 2-I7
2-L7
NA75-43-990A 2-I7
2-L7

****
* *
* 44-000 *
* *
****

NA01-44-010 2-F8
N001-44-010A 2-F8
H380-44-013 2-G6
G030-44-031 2-F8
NA01-44-032 2-F8
FB01-44-033 2-F8
FB01-44-034 2-F8
N001-44-034B 2-F8

FB01-44-061B 2-F8
FB01-44-062A 2-F8
FC01-44-063A 2-F8
N001-44-063 2-F8
NA01-44-150C 2-F8
NA01-44-150D 2-F8
0866-44-187A 2-F8
0866-44-189 2-G8
NA75-44-410 2-G8
NA75-44-420 2-G8
1011-44-439 2-G8

****
* *
* 45-000 *
* *
****

NA01-45-111 2-H8
NA01-45-111B 2-H8

NA75-45-112A 2-H8
NB13-45-230A 2-M7
NB44-45-230A 2-M7
NB13-45-240A 2-M7
NB44-45-240A 2-M7
NA75-45-280 2-J7
NB13-45-280 2-M7
NB44-45-280C 2-M7
NA01-45-320D 2-J7
NB13-45-320A 2-M7
NB44-45-320B 2-M7
NA75-45-360A 2-J7
NB13-45-360B 2-M7
NB44-45-360C 2-M7
NB44-45-360E 2-M7
NA01-45-510C 2-F6
NA20-45-510D 2-F6
HE01-45-540 2-F6
NA75-45-611A 2-H8
NA75-45-611C 2-H8

NA75-45-711A 2-H8
NA75-45-711C 2-H8
H266-45-910A 2-H8
NA20-45-910A 2-M7
NA01-45-911 2-J7
H260-45-912 2-H8
H266-45-912 2-H8
NA01-45-912 2-H8
NA01-45-913 2-H8
NA75-45-913 2-J7
FB01-45-914 2-H8
NA01-45-914 2-I8
B001-45-915 2-J7
HG31-45-915 2-M7
NA01-45-915A 2-J7
NA20-45-915 2-L7
BC1D-45-916 2-J7
2-M7
H115-45-916A 2-M11
B210-45-917 2-I8

B001-45-919B 2-J7
2-M7
G030-45-919A 2-F6
2-J7
H266-45-920A 2-I8
NA20-45-920B 2-M7
H260-45-930 2-I8
H266-45-930A 2-I8
H002-45-961 3-G3
3-H8

****
* *
* 46-000 *
* *
****

NA81-46-AT0B 2-J8
N002-46-AT3 2-L14
H338-46-AT8 2-J8

H338-46-027 2-J8
NA81-46-030B 2-J8
NA81-46-040 2-J8
FB02-46-058C 2-J8
1015-46-085 2-D7
2-M6
NA03-46-088 2-J8
NA81-46-100 2-J8
NA03-46-570 2-J8
0223-46-683 2-M6
1015-46-684A 2-J8

****
* *
* 49-000 *
* *
****

8173-49-114 2-F5
8239-49-114 2-F5

H005-49-460 2-E6
H005-49-470 2-E6
B252-49-512 2-G7
B252-49-514 2-G7
B093-49-580 2-E6
B252-49-620A 2-H7
GA02-49-638 2-E7
D001-49-650A 2-E7
2-G7
B252-49-666 2-H7
F100-49-686 2-F7
2-H7
0305-49-686B 2-E6

****
* *
* 50-000 *
* *
****

NA01-50-A20A 2-E10
NA01-50-A20B 2-E10
NA23-50-A20 2-E10
NA23-50-A20A 2-E10
NA01-50-0G8 2-H10
NA01-50-0G9 2-E10
NA01-50-0J1 2-F10
NA01-50-0J5 2-E10
NA01-50-0K0B 2-E10
NA75-50-0K7A 2-G10
NA01-50-0Z2 2-E10
NAY1-50-030 2-E10
B092-50-032 2-F10
GJ21-50-032 2-H10
BF67-50-033 2-E10
2-H10
NA01-50-068 2-F10
NA01-50-070 2-F10
NA01-50-1AYC 2-F10
NA01-50-1B0 2-F10

NA01-50-1C0 2-F10
NA01-50-1E2 2-F10
KA01-50-1G2 2-E10
NA01-50-1ZYB 2-F10
NA01-50-101A 2-F10
NA01-50-114 2-F10
FB01-50-132 2-E10
FB01-50-133C 2-G10
NA01-50-133 2-I10
FB01-50-144 2-F10
NA01-50-160 2-F10
NA01-50-18X 2-F10
NA01-50-180A 2-E10
NA01-50-2A0B 2-G10
NA01-50-2C6 2-H10
NA01-50-2J0 2-H10
NA01-50-2S4 2-H10
NA01-50-2S5 2-H10
NAY1-50-220A 2-H10
BF82-50-233 2-G10

2-H10
NA01-50-260 2-H10
NA01-50-28XC 2-H10
NA01-50-28YC 2-I10
NA01-50-280A 2-H10
NA01-50-290A 2-H10
DX50-50-6B1 2-J10
NA01-50-6B1 2-J10
NA01-50-6B2 2-J10
NAY1-50-601 2-J10
NA01-50-601A 2-J10
NA01-50-741 2-M10
B481-50-744 2-L10
B481-50-75X 2-M10
NA01-50-751 2-M10
NA01-50-790E 2-J10
NA01-50-792A 2-J10
UB39-50-795 2-N10
B455-50-796A 2-J10
NA01-50-797A 2-J10

NA01-50-798 2-J10
B467-50-8C5 2-L11
NA01-50-8P0 A5 2-L11
NA01-50-8P0 HU 2-L11
NA01-50-8P0 M8 2-L11
NA01-50-8P0 PT 2-L11
NA01-50-8P0 PZ 2-L11
NA01-50-8P0 SU 2-L11
NA01-50-8P0 23 2-L11
NA01-50-8P0 57 2-L11
NA01-50-8P0AA5 2-L11
NA01-50-8P0AHU 2-L11
NA01-50-8P0AM8 2-L11
NA01-50-8P0APT 2-L11
NA01-50-8P0APZ 2-L11
NA01-50-8P0ASU 2-L11
NA01-50-8P0A23 2-L11
NA01-50-8P0A57 2-L11
G158-50-803 2-C11
2-F11

H260-50-841 3-D6
LA01-50-853 2-L11
EA01-50-891A 3-D5
E040-50-891 3-D5
NA01-50-894A 3-D5

****
* *
* 51-000 *
* *
****

H272-51-RC6 2-J10
NA01-51-SAX 2-L10
NA01-51-SA5 2-L10
NA01-51-SA7 2-L10
NA01-51-SA8 2-L10
NA01-51-SBX 2-L10
NA01-51-SC0B 2-M10
NA01-51-SC1A 2-M10

NA01-51-SC5B 2-M10
KA01-51-SC6 2-L10
NA01-51-SD0B 2-M10
NA01-51-SD1A 2-M10
NA01-51-SD5B 2-M10
KA01-51-SD6 2-M10
KA01-51-SD7 2-M10
NA01-51-SE1 2-L10
NA01-51-SE2 2-L10
NA01-51-SH1B 2-L10
NA01-51-SH2B 2-M10
NA01-51-SJ2A 2-L10
NA01-51-SJ3 2-L10
NA01-51-SK2 2-L10
NA04-51-S02 3-C10
BS34-51-S25A 2-L10
B481-51-0E3 2-K10
8BN1-51-030 2-K10
NA02-51-031 2-K10
NA01-51-032 2-K10

NA01-51-033A 2-K10
NA01-51-034 2-K10
NA01-51-037 2-K10
8BN1-51-040 2-K10
NA01-51-046 2-K10
NA01-51-06XA 2-C11
8BN1-51-060 2-C11
NA01-51-064 2-C11
NA01-51-069 2-C11
NA01-51-07XA 2-C11
8BN1-51-070 2-C11
8BN1-51-120 2-C11
8BN1-51-130 2-C11
NA01-51-15XC 2-F11
8BN1-51-150 2-F11
N001-51-155A 2-F11
NA01-51-158 2-G11
NA01-51-159 2-F11
NA01-51-16XC 2-G11
8BN1-51-160 2-F11

N001-51-165A 2-F11
NA01-51-169 2-G11
NA01-51-170B 2-F11
G030-51-172 2-G11
NA01-51-180B 2-F11
BR70-51-264 2-H16
8BF1-51-270 2-I11
FB67-51-272 2-I11
FB67-51-273 2-I11
FB67-51-276 2-I11
NB38-51-310A 2-J11
NB38-51-311 2-J11
NB38-51-445A 2-J11
NA01-51-5D3A 2-C11
NA01-51-5EXA 2-C11
NA01-51-5E2 2-D11
NA01-51-5FXA 2-C11
NA01-51-5G9 2-G11
NA01-51-5H1C 2-G11
NA01-51-5H2A 2-G11

NA01-51-5J1C 2-G11
NA01-51-5J2A 2-G11
8BN1-51-550 2-G11
8BN1-51-560 2-G11
NA01-51-58XA 2-H11
NA01-51-580B 2-G11
NA12-51-580B 2-G11
NA12-51-580C 2-G11
BJ38-51-584 2-H11
NA12-51-584A 2-H11
NA01-51-592B 2-G11
FB01-51-665 2-M10
NA01-51-669 2-M10
NA01-51-711 2-K11
2-L11
NA01-51-721A 2-K11
2-L11
BB1H-51-731 2-G10
2-K11
NA01-51-789 2-J10

N021-51-790 3-C10
B002-51-814 3-L8
UB39-51-815 3-K8
F044-51-912 2-H12
G030-51-914 2-L11

****
* *
* 52-000 *
* *
****

NAY1-52-110 2-E12
NAY1-52-210 2-E12
NAY1-52-310B 2-M11
NA01-52-410A 2-M11
NA01-52-410B 2-M11
NA01-52-420A 2-M11
NA01-52-420B 2-M11
B092-52-518 2-N11

NAY1-52-610C 2-C12
NA01-52-710B 2-C12
NA01-52-710C 2-C12
NA01-52-720B 2-C12
NA01-52-791A 2-C12
NA01-52-792A 2-C12

****
* *
* 53-000 *
* *
****

NA75-53-100 2-D12
0187-53-134 2-F13
NA01-53-16XC 2-D12
NAY2-53-200 2-E12
NA01-53-210E 2-E12
NA75-53-31XA 2-E12
NA75-53-31XE 2-E12

NA01-53-32XB 2-F12
NA01-53-330 2-E12
NA01-53-37Y 2-E12
NA01-53-37ZB 2-E12
NA01-53-380 2-E12
NA01-53-391 2-F12
NA01-53-482 2-C13
NA75-53-510A 2-H12
NA75-53-510B 2-H12
NA75-53-510C 2-H12
NA01-53-591 2-F12
NB38-53-600 2-C13
NB38-53-600A 2-C13
NB38-53-600B 2-C13
NA01-53-602A 2-D13
NA01-53-650A 2-C13
NA01-53-670A 2-C13
NA01-53-710B 2-C13
NA75-53-720 2-C13
NA01-53-725A 2-C13

NA01-53-740C 2-E13
B455-53-750C 2-C13
NA01-53-750 2-C13
NA01-53-750A 2-C13
NA01-53-760 2-C13
NA01-53-760A 2-C13
NA01-53-760B 2-C13
0305-53-781A 2-H12
NA01-53-810F 2-C13
NA01-53-810H 2-D13
NA01-53-819 2-D13
NA01-53-830C 2-E13
NA01-53-880A 2-D13
NA75-53-900 2-D13
NA75-53-900A 2-D13
NA01-53-931 2-D13
NA01-53-960C 2-I12
NA01-53-980C 2-I12
NA01-53-980D 2-I12

****
* *
* 54-000 *
* *
****

NA01-54-180 2-D12
NAY2-54-200 2-F12
NA01-54-210F 2-E12
0259-54-292A 1-J7
NA75-54-31XA 2-F12
NA75-54-31XE 2-F12
NA01-54-32XC 2-F12
NA01-54-330 2-F12
NA01-54-36X 2-E12
NA01-54-37Y 2-F12
NA01-54-37ZB 2-F12
NA01-54-380B 2-F12
NA01-54-391 2-F12
NA01-54-400G 2-H12
NA01-54-400J 2-H12

NA01-54-480 2-H12
NA01-54-480B 2-H12
NA01-54-482 2-D13
NA01-54-590 2-F12
NA01-54-610A 2-E13
NA01-54-650A 2-D13
NA01-54-660B 2-D13
NA01-54-670A 2-D13
NA01-54-725A 2-D13
NA01-54-740A 2-E13
NA01-54-750 2-D13
NA01-54-750A 2-D13
NA01-54-810F 2-D13
NA01-54-810H 2-D13
NA01-54-830C 2-E13
NA01-54-96XB 2-I12
NA01-54-971A 2-I12
NA01-54-971B 2-I12
NA01-54-980C 2-I12
NA01-54-980D 2-I12

****
* *
* 55-000 *
* *
****

NA75-55-210A00 2-C14
NB38-55-210A00 2-C14
B481-55-225 3-K6
G030-55-225 00 3-D6
NB38-55-225A00 2-C14
NB38-55-225A88 2-C14
N034-55-225 3-K6
NA01-55-241A00 2-I14
3-K6
1316-55-261 2-G14
B548-55-261 2-G14
NA01-55-280 2-L14
NA06-55-280 2-L14
NA75-55-4A1 2-G14

NB39-55-4A1 2-G14
NA75-55-420B00 2-E14
GJ21-55-428 2-C14
2-E14
NB13-55-430B 2-G14
NB39-55-430 2-G14
BR70-55-431 2-C14
B491-55-431 2-H14
NA01-55-431 2-G14
NA01-55-432 2-G14
NA01-55-437 2-G14
NA01-55-441D 2-G14
NA75-55-442 2-G14
NB13-55-446 2-G14
NA75-55-461 2-H14
NB39-55-461 2-H14
N007-55-467 2-G14
NA01-55-471B 2-H14
NB39-55-471 2-H14
NA01-55-481 2-H14

NB39-55-481 2-H14
BR70-55-490 2-C14
NA75-55-491 2-H14
NB39-55-491 2-H14
B455-55-561 2-I14
3-G7

****
* *
* 56-000 *
* *
****

NA75-56-A9XB 2-H13
NA75-56-A93 2-H13
NA75-56-A94 2-H13
NA75-56-B91 2-H13
NA01-56-03XA 1-J7
B095-56-032 1-J7
NA01-56-032B 1-J7

NA01-56-033B 1-J7
B001-56-051 2-F13
GA5R-56-051 2-F13
NA01-56-051 2-C12
2-F13
1011-56-051 2-F13
BC1D-56-052 2-F13
B092-56-052 2-F13
8545-56-052 2-F13
8545-56-053 2-F13
FB01-56-056 2-F13
NA75-56-06X 2-H13
NA01-56-111D 2-H13
NA01-56-111E 2-H13
NA01-56-112 2-H13
NA01-56-131A 2-F12
B455-56-135 2-H13
LA01-56-135 2-E12
NA01-56-141C 2-G12
NA01-56-145 2-G10

2-G12
2-I13
3-M8
B455-56-149 2-H13
B001-56-170C 2-M5
NA01-56-171A 2-H13
G030-56-176 2-J6
NA20-56-181A 3-M8
1219-56-211 2-M5
NA01-56-221B 2-D12
NA75-56-241 2-H13
NA75-56-241A 2-H13
0118-56-241 2-F13
8477-56-241 2-F13
0118-56-242B 2-F13
3-C3
NA01-56-29XC 2-I13
NA01-56-290C 2-I13
NA01-56-294 2-I13
NA75-56-3AY 2-I13

NA01-56-311A 2-H13
NA01-56-311C 2-I13
NA01-56-311D 2-I13
NA01-56-321A 2-I13
NA01-56-321C 2-I13
NA01-56-321D 2-I13
NA01-56-34XC 2-G12
NA01-56-34YC 2-G12
NA01-56-35X 2-H12
G211-56-355A 2-H12
B001-56-376 3-D6
NA01-56-39YA 2-I12
NA75-56-411B 2-I13
NA75-56-411C 2-I13
NA01-56-451 2-I13
0208-56-615 2-F13
NA01-56-620B 2-M11
LA01-56-631 2-M11
NA75-56-650A 2-M11
G030-56-693A 2-M11

NA01-56-720D 2-M11
H260-56-724 2-H12
NA01-56-760 2-M11
NA01-56-772 2-I12
NA01-56-78X 2-M11
B481-56-786 2-C12
FB01-56-787B 2-M11
NA01-56-787 2-M11
NA01-56-802 2-C12
NA01-56-805 2-C12
NB38-56-820 2-C12
NA01-56-840 2-C12
N007-56-850A 2-K6
N007-56-880A 2-K6
B095-56-890A 2-K6
NA01-56-890A 2-K6
NA01-56-896 2-K6
NA01-56-951 2-C12
NA01-56-971 2-I12

****
* *
* 57-000 *
* *
****

N034-57-KX0A 2-I16
NB11-57-K00 00 2-H4
2-I16
N034-57-K3XC 2-I16
NB11-57-K7X 00 2-I16
BG1R-57-K93A 3-C10
FC66-57-K98 2-I16
B455-57-05XB 2-H15
NA75-57-071 2-H15
NB40-57-100 00 2-H15
NB40-57-100A00 2-H15
NB40-57-100E00 2-I15
NB41-57-100 00 2-H15
NB41-57-100A00 2-H15
NB41-57-100G00 2-I15

NB42-57-100 00 2-H15
NB42-57-100A00 2-H15
NB42-57-100F00 2-I15
NB43-57-100 88 2-H15
NB43-57-100B88 2-I15
NB43-57-100D88 2-I15
NB44-57-100 88 2-H15
NB44-57-100B88 2-I15
NB44-57-100C88 2-I15
NB47-57-100 88 2-H15
NB47-57-100B88 2-H15
NB49-57-100 88 2-I15
NB49-57-100A88 2-I15
NB40-57-150 00 2-I15
NB40-57-150A00 2-J15
NB40-57-150E00 2-J15
NB41-57-150 00 2-I15
NB41-57-150A00 2-J15
NB41-57-150G00 2-J15
NB42-57-150 00 2-J15

NB42-57-150A00 2-J15
NB42-57-150F00 2-K15
NB43-57-150 88 2-J15
NB43-57-150B88 2-J15
NB43-57-150D88 2-K15
NB44-57-150 88 2-J15
NB44-57-150B88 2-J15
NB44-57-150C88 2-K15
NB47-57-150 88 2-J15
NB47-57-150B88 2-J15
NB49-57-150 88 2-J15
NB49-57-150A88 2-K15
LA01-57-425A 2-H16
3-C3
NA75-57-620 00 2-H16
2-K15
NA75-57-630G00 2-H16
NA75-57-630G88 2-H16
NB38-57-630A00 2-H16
NB38-57-630A88 2-H16

N026-57-631 00 2-H16
NA75-57-680A00 2-H16
2-K15

****
* *
* 58-000 *
* *
****

NAY4-58-02X 2-J16
NAY4-58-02XA 2-J16
NA52-58-030A 2-J16
B092-58-201A 2-J16
FB01-58-210 2-J15
BA54-58-225 2-J16
B455-58-225 2-J16
S085-58-225 2-J16
GJ21-58-226 2-J16
B156-58-240 2-J16

BC1D-58-265 3-C3
NA01-58-270B 3-C3
HG30-58-302A 3-C3
NA01-58-303 00 3-C3
NA01-58-310B 3-C3
G030-58-315 2-C10
3-C3
NA01-58-330C00 3-C3
FB01-58-335 3-C3
B092-58-355 3-D3
B001-58-361A 3-E3
NA01-58-410D 3-D3
FD01-58-492 2-C10
FD01-58-493 2-C10
G211-58-495 3-D3
B235-58-502 2-K16
UB39-58-502A 2-K16
B092-58-505 2-K16
3-D3
NB39-58-510 2-K16

NA01-58-560H 3-D3
NA02-58-560K 3-D3
NA02-58-563 3-D3
NA02-58-564 3-E3
HG30-58-565 3-E3
B092-58-569 3-E3
NA02-58-58X 3-E3
S084-58-580A00 3-D3
B001-58-582A00 3-D3
B001-58-585 3-E3
NA02-58-590 3-E3
NA01-58-603D 2-K16
NA01-58-604B 2-K16
NA01-58-651A 2-K16
NA01-58-651B 2-K16
NB39-58-661 2-K16
NB39-58-661A 2-L16
NA01-58-760G 2-L16
NA01-58-760H 2-L16
NA01-58-760J 2-L16

G031-58-762 2-L16
1011-58-772 2-L16
3-G3
NA01-58-810D 3-G3
B157-58-815 3-G3
NA01-58-815 3-G3
NA01-58-821 3-G3
NA01-58-821A 3-G3
NA02-58-821 3-G3
NA01-58-861A 3-F3
NA02-58-861A 3-F3
H272-58-911 2-L16

****
* *
* 59-000 *
* *
****

NAY4-59-02X 2-J16

NAY4-59-02XA 2-J16
NA52-59-030A 2-J16
FB01-59-210 2-J16
B156-59-240 2-J16
NA01-59-310B 3-C3
G030-59-315 2-C10
2-C12
3-F3
NA01-59-330C00 3-C3
B001-59-335 3-C3
NA01-59-410D 3-D3
NB39-59-510 2-K16
NA01-59-560H 3-D3
NA02-59-560K 3-D3
NA02-59-563 3-E3
NA02-59-58X 3-E3
NA02-59-590 3-E3
NA01-59-603D 2-K16
NA01-59-604B 2-K16
NA01-59-651A 2-K16

NA01-59-651B 2-K16
NB39-59-661 2-L16
NB39-59-661A 2-L16
NA01-59-760G 2-L16
NA01-59-760H 2-L16
NA01-59-760J 2-L16
NA01-59-810D 3-G3
NA01-59-861A 3-F3
NA02-59-861A 3-F3

****
* *
* 60-000 *
* *
****

NA01-60-070B 2-F14
NA03-60-070A 2-F14
NA03-60-071 2-F14
NA01-60-075 2-F14

NB38-60-1A1B 3-E8
NA75-60-121B 2-D15
NA01-60-141 2-D15
NA75-60-160A00 2-D15
NA75-60-170A00 2-D15
NA75-60-183 2-D15
NA75-60-193 2-D15
NA01-60-220 00 2-C14
NA01-60-223 00 2-C14
NA01-60-230A00 2-C14
NA75-60-350B00 2-I14
NA75-60-353 2-I14
B092-60-376 2-L14
NA75-60-401G00 2-I14
NA75-60-401G88 2-I14
B092-60-408 2-I14
NB38-60-420 2-I14
NB38-60-420A 2-I14
NA01-60-430E 2-I14
NA01-60-435 2-I14

NA01-60-463 2-I14
NA75-60-960A 2-J6
J004-60-962 2-J6

****
* *
* 61-000 *
* *
****

NA01-61-A01 3-D4
NA01-61-A02 3-D4
NA01-61-A09 3-D4
NA75-61-A10 3-D4
NA75-61-A15 3-D4
NA01-61-A20 3-D4
NA01-61-A21 3-D4
NA01-61-A30 3-D4
NA75-61-B01 3-F4
NA01-61-B02 3-F4

NA01-61-B10 3-F4
NA01-61-B15 3-F4
NA01-61-B20 3-F4
NA01-61-C04A 3-E4
H260-61-C09 3-E4
NA01-61-C25 3-E4
NA01-61-C35 3-E4
NA75-61-C45 3-E4
NA01-61-C50A 3-E4
NA01-61-C95 3-E4
NA02-61-C95 3-E4
NA03-61-C[illegible] 3-E4
NA01-61-D[illegible]2 3-E4
NA01-61-J01A 3-C5
NA01-61-J02A 3-C5
NA01-61-J04 3-C5
LB51-61-J1X 3-L4
LB54-61-J1X 3-L4
LB55-61-J1X 3-L4
LB56-61-J1X 3-L4

LB57-61-J1X 3-L4
NA01-61-J10A 3-C5
NA75-61-J14 3-C5
NA01-61-J15 3-C5
NA01-61-J20 3-C5
NA75-61-K00 3-M4
NA75-61-K1X 3-M4
NA75-61-K10 3-M4
NA75-61-K11 3-M4
NA75-61-K12 3-M4
NA75-61-K19 3-M4
NA75-61-K2X 3-M4
NA75-61-K23 3-M4
NA02-61-K24 3-M4
F065-61-K25 3-M4
F065-61-K31 3-M4
NA75-61-K39 3-M4
NA75-61-L10 3-N4
NA75-61-L11 3-N4
NA75-61-L12 3-N4

NA75-61-L13 3-N4
F065-61-L14 3-N4
F065-61-L16 3-N4
1708-61-031 2-G13
NA75-61-130 3-D4
NA75-61-130A 3-D4
NA75-61-140 3-F4
NA75-61-140A 3-F4
NA01-61-150A 3-C4
NA75-61-161A 2-D15
NA75-61-190C 3-E4
NA01-61-191 3-E4
NA01-61-193 3-H4
NA01-61-195 3-E4
NA01-61-197 3-H4
NA75-61-211 3-C4
NA75-61-212 3-C4
8871-61-219A 3-C4
NA01-61-253 2-D15
NA01-61-4H1 3-H4

NA01-61-435 3-I4
NA02-61-435 3-J4
FD16-61-639B 3-C10
NA75-61-450 3-N4
NA75-61-46XA 3-H4
BR71-61-46Y 3-H4
BR76-61-46Y 3-H4
NA01-61-46YC 3-H4
NA75-61-461 3-H4
NA75-61-462 3-H4
NA75-61-467 3-H4
NA75-61-468 3-H4
BF67-61-471 3-H4
NA02-61-471A 3-H4
NA01-61-472 3-I4
NA01-61-474 3-I4
NA02-61-474A 3-I4
NA02-61-476 3-I4
UB39-61-479A 3-I6
NA75-61-480 3-I4

FC20-61-481 3-I4
UB39-61-486A 3-I4
NA75-61-500 3-I4
GB6H-61-503 3-I4
NA01-61-52YA 3-I4
NA01-61-52Z 3-J4
NA75-61-520B 3-C5
NA01-61-526 3-I4
NA01-61-526A 3-I4
NA01-61-529 3-J4
NA75-61-545A 3-J4
FB04-61-557 3-J4
BF67-61-558 3-J4
BF67-61-559 3-J4
NA75-61-695 3-J4
NA01-61-710 3-J4
B111-61-731 3-J4

****
* *
* 62-000 *
* *
****

S084-62-671 3-F3
S084-62-671A 3-F3
NA01-62-681 3-F3
B216-62-682 3-F3

****
* *
* 63-000 *
* *
****

NA01-63-895 3-D5
3-D6
NB39-63-900 3-D5
NB39-63-900A 3-D5
NAY1-63-930 3-C6
3-D5

NB40-63-931 3-D5
3-D6
NA01-63-934 3-D5
3-D6

****
* *
* 64-000 *
* *
****

NA75-64-03XA 2-J14
NA75-64-030F00 2-J14
NA75-64-030F88 2-J14
NA75-64-041C00 2-J14
NA75-64-041C88 2-J14
B092-64-046 2-I14
2-L14
BC5E-64-090B00 2-J14
BC5E-64-090B67 2-J14

BC1D-64-101 2-J14
NA75-64-161C00 2-J14
NA75-64-270C00 2-D14
NA75-64-270C88 2-D14
NA01-64-331 00 2-L14
NA01-64-344B 2-L14
NA81-64-350A 2-J8
GA2A-64-394 2-D15
NA01-64-410D00 2-L14
NA01-64-410E00 2-M14
NA02-64-410D00 2-M14
NA02-64-410E00 2-M14
NA03-64-410C00 2-M14
NA03-64-410D00 2-M14
NA06-64-410D00 2-M14
NA06-64-410E00 2-M14
N007-64-410B00 2-M14
N007-64-410C00 2-N14
N008-64-410B00 2-M14
N008-64-410C00 2-N14

NA01-64-414 2-N14
NA01-64-416 2-L14
H260-64-419 2-N14
NA01-64-424 2-L14
FB01-64-430 2-N14
NA01-64-437 00 2-L14
NA01-64-45XA00 2-N14
NA01-64-450A00 2-N14
NA01-64-450B00 2-N14
NA01-64-452 00 2-N14
NA01-64-481B 2-N14
H001-64-493 2-N14
FB01-64-495 2-C15
NA01-64-610B00 2-D14
NA01-64-612 2-D14
NA01-64-613 2-D14
NA01-64-617 00 2-D14
NA01-64-618 2-D14
NA01-64-622 2-D14
NA01-64-623 00 2-D14

NA75-64-741 2-D15
N001-64-81X 00 2-D15
NA75-64-841 2-D15
NA01-64-905 00 2-J14
NA01-64-912 00 2-J14
NA01-64-912 88 2-J14
W201-64-999 2-E15
2-J14

****
* *
* 65-000 *
* *
****

1353-65-190 2-E13

****
* *
* 66-000 *
* *
****

LB84-66-AC9 3-G7
N034-66-AS1 3-G7
N034-66-AS2 3-G7
NB41-66-AS3 3-G7
FD04-66-AW1 3-G7
N007-66-A3X 3-J7
N007-66-A3Y 3-J7
N007-66-A3Z 3-J7
N007-66-A9X 3-J7
N007-66-A9Y 3-J7
N007-66-A90 3-J7
NB40-66-BC1 3-H7
TB48-66-BC1 3-H7
NB40-66-BC4 3-G7
NB17-66-CS0 3-M6
NB17-66-CS0A 3-M6
N007-66-D10 3-J7
0483-66-061A 2-K10

NB17-66-120 3-M6
NB17-66-120A 3-M6
NB18-66-120 3-M6
NB18-66-120A 3-M6
H384-66-121 3-M6
NA02-66-122 3-M6
NA02-66-126 3-M6
NA01-66-128 3-M6
NA02-66-128 3-M6
NA02-66-135 3-M6
NA02-66-136 3-M6
D001-66-151A 2-C10
H043-66-154 2-C10
N041-66-170A 3-K6
NA01-66-201 3-C10
S09A-66-251 3-K6
B16A-66-29Y 3-K6
B16A-66-290 3-K6
B16A-66-298 3-K6
LA01-66-3A1 3-E7

NA01-66-3A2A 3-E7
NA01-66-3A3A 3-E7
LA01-66-310A 3-E7
NA01-66-311A 3-E7
NA01-66-320 3-E7
NA01-66-340A 3-K6
NA01-66-350A00 2-C15
NA03-66-350 00 2-C15
NA75-66-361 3-E7
FB01-66-4D0 2-N6
GJ21-66-450A 2-G8
NA75-66-460 3-K6
NA01-66-462 3-K6
BR70-66-490A 2-D7
2-N6
B001-66-490A 2-D7
2-N6
LA01-66-490A 2-L6
B455-66-540 3-D7
LA01-66-546 3-D7

NA52-66-600A 3-K6
NB11-66-730 3-L7
N008-66-730 3-L7
NA01-66-731A 3-L7
NB11-66-731 3-L7
NB11-66-732 3-L7
NB11-66-760 3-C8
NB11-66-762 3-C8
SA59-66-790A 3-D7
HF01-66-830 3-N6
0813-66-879 1-J7
FB01-66-9A1A 3-J7
NA01-66-9B0A 3-K7
NB38-66-9B1 3-G7
NB40-66-9C0 3-G7
NB41-66-9C0 3-G7
B02A-66-9M0A 3-G7
B03A-66-9M0 3-G7
KA03-66-930A 3-J7
N007-66-930A 3-J7

N034-66-930 3-J7
NA01-66-940C 3-J7
NB40-66-940 3-J7
GB08-66-941 3-J8
3-L8
B02T-66-960 3-K7
NB11-66-960 2-K15
NB38-66-960 2-K15
NB38-66-960A 2-K15
NB42-66-960 3-G3
3-K7
N034-66-960 3-K7
NB38-66-997 3-G7
3-K7
N018-66-997 3-H7

****
* *
* 67-000 *
* *
****

NA01-67-BJ0A 3-N7
N018-67-BW0 3-L7
NA01-67-B10B 3-C8
NA01-67-B10C 3-C8
N007-67-B10A 3-M7
NA75-67-B11A 3-L7
NA75-67-B12 3-L7
NA01-67-B31 3-E8
NB13-67-B4X 3-C7
NA80-67-B80 3-C8
NB84-67-B80 3-C8
NA75-67-B81 3-L7
NA01-67-CH5 3-H8

NA01-67-CH8 3-I8
NA01-67-CS1 3-H8
NA02-67-CS1A 3-I8
N001-67-CS1C 3-H8
NA01-67-CS5 3-I8
NA01-67-CS6 3-I8
NA01-67-CW5A 3-H8
NA02-67-CW5A 3-H8
LA01-67-C11 3-N6
NA75-67-EW1B 3-C8
N007-67-G11 3-K7
B300-67-HD1 3-I8
NA75-67-P54 3-H8
NA01-67-P71 3-H8
NA80-67-SC0 3-E8
T001-67-S93 3-L7
NB38-67-010D 3-L7
3-M7
NB38-67-010E 3-M7
NB40-67-010D 3-L7

NB40-67-010E 3-M7
NB42-67-010D 3-L7
NB42-67-010E 3-M7
NB43-67-010D 3-L7
NB43-67-010E 3-M7
NC29-67-010A 3-L7
G030-67-018A 3-H8
NB38-67-030B 3-E8
NB39-67-030B 3-E8
NB42-67-030B 3-E8
NB43-67-030B 3-E8
NC29-67-030 3-E8
B092-67-041 3-L8
NB84-67-050 3-M7
NB84-67-050B 3-M7
NB86-67-050 3-M7
NB86-67-050B 3-M7
B001-67-051 2-K6
UB42-67-051 3-H8
G031-67-053A 3-H8

H260-67-054 2-K6
N007-67-060A 3-D6
NB11-67-070B 3-C8
NB12-67-070B 3-C8
NB13-67-070B 3-D8
NB14-67-070B 3-D8
H261-67-073 3-I8
UB73-67-073A 3-I8
NB38-67-080A 3-D8
H115-67-099 3-C8
H116-67-099 3-C8
H117-67-099 3-C8
NB38-67-100G 3-M7
NB84-67-110 3-M7
NB86-67-110 3-M7
NA01-67-190A 3-F8
NA02-67-190A 3-F8
NA53-67-190D 3-F8
NB11-67-190B 3-F8
NB12-67-190C 3-F8

GJ21-67-306 3-L8
NA01-67-321 3-C9
NA02-67-321 3-C9
BM95-67-330B 3-C9
BR72-67-330B 3-C9
B461-67-331A 3-C9
D040-67-331A 3-C9
NA10-67-332 3-C9
D040-67-333 3-C9
NA01-67-340B 3-C9
NA01-67-340C 3-C9
NA01-67-340D 3-C9
NA04-67-340A 3-C9
NA04-67-340B 3-C9
NA04-67-340C 3-C9
NA01-67-345 3-E9
NA01-67-346 3-E9
NA23-67-346 3-E9
NA23-67-351 3-E9
NA26-67-351 3-E9

NA23-67-354 3-E9
NA01-67-360A 3-C9
NA01-67-361 3-D9
NA01-67-362 3-D9
NA01-67-363 3-D9
NA01-67-364 3-D9
B455-67-369 3-C9
LA01-67-395A 3-D9
LA01-67-395C 3-D9
NA17-67-4C1 3-L8
NA17-67-4C2 3-L8
NA17-67-4T0A 3-L8
NA17-67-4T1 3-M8
NA01-67-480A 3-J8
NA04-67-480B 3-J8
NA01-67-481 3-J8
NA04-67-481 3-K8
LB83-67-482 3-M8
GJ21-67-483 3-M8
NA17-67-488 3-L8

NA01-67-501A 3-J8
NA15-67-501 3-M8
NA17-67-501 3-M8
NA18-67-501 3-M8
NA19-67-501 3-M8
DB05-67-502 3-J8
3-L8
H001-67-502 3-J8
3-L8
NA17-67-502 3-L8
S013-67-502 3-L8
S084-67-502 3-J8
3-M8
4116-67-502 3-J8
LA01-67-505B 3-J8
3-L8
FA54-67-508 3-J8
NA01-67-510 3-J8
3-M8
G030-67-519 2-N11

NA01-67-520 3-J8
NA04-67-520 3-J8
NA17-67-521 3-M8
NA18-67-521 3-L8
S095-67-521 3-J8
NA56-67-560 3-N6
NA56-67-6DYA 3-N6
M020-67-6D1 3-N6
NB84-67-650 3-N6
N036-67-650 3-N6
B481-67-7C0B 3-N6
EE12-67-720 3-J4
NA02-67-720A 3-N6
H300-67-740 3-N6
H450-67-740 3-K4
LA10-67-740 3-J6
3-N6
LA40-67-740 3-N6
NB86-67-740A 2-E8
NB86-67-740B 2-E8

NA02-67-9A1 3-N6
NA17-67-9A1 3-N6
NA75-67-9A1 3-N6
NA81-67-9A1 3-C7
NA02-67-9A2 3-C7

****
* *
* 68-000 *
* *
****

W201-68-AA5A00 2-K14
B499-68-AC3 00 3-E10
B499-68-AC3 69 3-E10
B455-68-AD2 3-F9
N007-68-031 00 3-D6
NA01-68-070 3-K9
F057-68-071 3-K9
NA01-68-090D00 3-F9

NA01-68-090E00 3-F9
NA01-68-160 00 3-F9
NA01-68-170 00 3-F9
NA01-68-222A00 3-E10
NA01-68-222A88 3-E10
NB38-68-3F1 02 3-G9
NB38-68-3F1 88 3-G9
NB38-68-3F1B02 3-G9
NB38-68-3F1B88 3-G9
BR72-68-3S0A60 3-G3
NA75-68-370 00 3-G9
NA75-68-370 88 3-G9
NA01-68-390 00 3-G9
NA01-68-390 88 3-G9
NB38-68-4G3 2-J11
B100-68-401 3-G3
W201-68-401 3-H3
NB84-68-420A00 3-H3
NB84-68-420B00 3-H3
NB85-68-420B00 3-H3

NB85-68-420B80 3-H3
NB85-68-420C00 3-H3
NB85-68-420C80 3-H3
NB85-68-420D00 3-H3
NB85-68-420D80 3-H3
NB86-68-420A00 3-H3
NB86-68-420B00 3-H3
NB87-68-420B00 3-H3
NB87-68-420B80 3-H3
NB87-68-420C00 3-H3
NB87-68-420C80 3-H3
NB87-68-420D00 3-H3
NB87-68-420D80 3-H3
NB84-68-450A00 3-I3
NB84-68-450B00 3-I3
NB85-68-450B00 3-I3
NB85-68-450B80 3-I3
NB85-68-450C00 3-I3
NB85-68-450C80 3-I3
NB85-68-450D00 3-I3

NB85-68-450D80 3-I3
NB86-68-450A00 3-I3
NB86-68-450B00 3-I3
NB87-68-450B00 3-I3
NB87-68-450B80 3-I3
NB87-68-450C00 3-I3
NB87-68-450C80 3-I3
NB87-68-450D00 3-I3
NB87-68-450D80 3-I3
A004-68-5H0 00 3-G3
NA75-68-520 00 3-E10
NA75-68-520 88 3-E10
NA76-68-520 00 3-E10
NA76-68-520 88 3-E10
NA75-68-550 00 3-E10
NA75-68-550 88 3-E10
NA76-68-550 00 3-E10
NA76-68-550 88 3-E10
NA01-68-6L1 3-I9
NA01-68-6L6 3-I9

NA01-68-6N1 2-I12
NA01-68-6N2 3-I9
NA01-68-6N4 3-I9
B100-68-615 2-N6
3-I9
NA01-68-615 3-I9
NA01-68-631B 3-I9
NB38-68-670A02 3-I9
NB38-68-670A88 3-I9
NB38-68-693 02 3-I9
NB38-68-693 88 3-I9
NA02-68-710A 3-G9
NA01-68-711 00 3-G9
FA54-68-719B 3-G9
NA02-68-720B 3-G9
NA01-68-721 00 3-G9
NA01-68-8P9A 3-I9
NA01-68-811A04 3-I9
NA01-68-819C04 3-I9
KA01-68-86YA 3-G9

B003-68-865 00 3-I8
B040-68-865A00 2-H12
B235-68-865A 3-J9
3-K7
GJ12-68-865 3-F9
3-H9
GJ21-68-865 3-E10
3-F9
3-H9
G032-68-865A00 3-D6
3-H9
3-J9
G032-68-865A67 3-D6
3-H9
3-J9
S083-68-865A00 3-J9
S083-68-865A88 3-J9
N026-68-871A04 3-G9
GJ21-68-885B00 3-H9
GJ21-68-885B88 3-H9

UB54-68-885 00 3-J9
NA01-68-891A04 3-H9
NA01-68-911 00 2-L16
GJ37-68-955 00 3-K7

****
* *
* 69-000 *
* *
****

GJ21-69-A13 3-C10
UB40-69-C61 3-C10
FA03-69-C72A 3-D10
B001-69-D51 3-C10
KA10-69-D61A 3-C10
NA01-69-014A 3-C10
NB84-69-036 3-D10
NB85-69-042 3-D10
NB38-69-044 3-D10

FA01-69-064A 3-D10
NA01-69-068A 3-D10
BF68-69-073 3-D10
BF69-69-073B 3-D10
NA05-69-120CA5 3-L9
NA05-69-120CHU 3-L9
NA05-69-120CM8 3-L9
NA05-69-120CPT 3-L9
NA05-69-120CPZ 3-L9
NA05-69-120CSU 3-L9
NA05-69-120C23 3-L9
NA05-69-120C57 3-L9
NA52-69-120CA5 3-L9
NA52-69-120CHU 3-L9
NA52-69-120CM8 3-L9
NA52-69-120CPT 3-L9
NA52-69-120CPZ 3-L9
NA52-69-120CSU 3-L9
NA52-69-120C23 3-L9
NA52-69-120C57 3-L9

NA05-69-180CA5 3-L9
NA05-69-180CHU 3-L9
NA05-69-180CM8 3-L9
NA05-69-180CPT 3-L9
NA05-69-180CPZ 3-L9
NA05-69-180CSU 3-L9
NA05-69-180C23 3-L9
NA05-69-180C57 3-L9
NA52-69-180CA5 3-M9
NA52-69-180CHU 3-M9
NA52-69-180CM8 3-M9
NA52-69-180CPT 3-M9
NA52-69-180CPZ 3-M9
NA52-69-180CSU 3-M9
NA52-69-180C23 3-M9
NA52-69-180C57 3-M9
HG82-69-220A 3-M9
BC1C-69-240 3-D5
3-M9
NB12-69-270A02 3-M9

NB39-69-270B02 3-M9
NB39-69-270C02 3-M9
NB39-69-270D02 3-M9
NB11-69-320B02 3-M9
NB39-69-320B02 3-M9
NB39-69-320C02 3-M9
B316-69-361 3-J3
BF70-69-370C00 3-J3
BF70-69-370C88 3-J3
BF70-69-372 00 3-J3
BF70-69-372 88 3-J3
BF70-69-390C00 3-J3
BF70-69-390C88 3-J3
BF70-69-392 00 3-J3
BF70-69-392 88 3-J3
NA01-69-650 3-K9
NA01-69-650A 3-K9
NA01-69-670 3-K9
NA01-69-670A 3-K9

****
* *
* 70-000 *
* *
****

NA01-70-J30 2-K12
NA01-70-020B 2-I12
B092-70-070A 2-K12
NA01-70-071A 2-I12
NA75-70-100 2-J12
NA01-70-11Z 2-J12
NA01-70-111C 2-J12
NA01-70-116B 2-K12
NA01-70-116C 2-K12
NA01-70-12XA 2-J12
NA01-70-15X 2-J12
NA01-70-17XA 2-J12
NA01-70-19XB 2-J12
NA01-70-19XC 2-J12
NA01-70-19XE 2-J12

NA01-70-210 2-N12
NA01-70-230 2-J12
NA01-70-230A 2-J12
NA01-70-230B 2-J12
NA01-70-230C 2-J12
NA01-70-240B 2-J12
NA01-70-240D 2-J12
NA01-70-270B 2-K12
NA01-70-274 2-J12
NA01-70-275 2-K12
NA01-70-280B 2-N12
NAY1-70-400B 2-N12
NA01-70-440A 2-K12
NA01-70-445 2-K12
NA01-70-460 2-K12
B001-70-490 2-M12
0187-70-491 2-K6
NA01-70-51Y 2-I12
NA01-70-521A 2-K12
NA01-70-530B 2-K12

NA01-70-530C 2-K12
NA01-70-530D 2-K12
NA01-70-62YB 2-H12
NA01-70-62YC 2-H12
NB38-70-640 2-L12
NB38-70-640A 2-L12
NA01-70-650 2-L12
NA01-70-670 2-L12
NA01-70-670B 2-L12
NA01-70-670C 2-L12
NA01-70-750G 2-L12

****
* *
* 71-000 *
* *
****

NA01-71-J30 2-M12
NA01-71-020B 2-L12

NA01-71-071A 2-I12
NA75-71-100 2-L12
NA01-71-11XB 2-L12
NA01-71-11Z 2-L12
NA01-71-116D 2-K12
NA01-71-116E 2-K12
NA01-71-12XA 2-L12
NA01-71-15XA 2-L12
NA01-71-19XB 2-L12
NA01-71-19XC 2-L12
NA01-71-19XE 2-L12
NA01-71-192 2-M12
NA01-71-210 2-N12
NA01-71-230 2-M12
NA01-71-230A 2-M12
NA01-71-230B 2-M12
NA01-71-230C 2-M12
NA01-71-240C 2-M12
NA01-71-240D 2-M12
NA01-71-270B 2-M12

NA01-71-274 2-M12
NA01-71-275 2-M12
NA01-71-280B 2-N12
NAY1-71-400B 2-N12
NA01-71-421 2-M12
NA01-71-440A 2-N12
NA01-71-445 2-M12
NA01-71-453 2-N12
NA01-71-460 2-M12
NA01-71-670B 2-N12
NA01-71-670C 2-N12
NA01-71-670D 2-N12

****
* *
* 72-000 *
* *
****

H043-72-411 3-C3

****
* *
* 75-000 *
* *
****

3625-75-139 2-G14
2-I14

****
* *
* 76-000 *
* *
****

0208-76-071 3-J9
NA01-76-2B0D00 2-D10
FD01-76-201 2-D10
FD01-76-202 2-D10
N001-76-210D 2-C10

N001-76-220D 2-C10
NA01-76-230D 2-C10
EA70-76-250B 2-C10
NA75-76-290B 2-C10
NA81-76-290B 2-D10
G030-76-448 3-F3
B001-76-526 3-E4
H043-76-619A 3-E9
B094-76-662 3-E9
B094-76-663 3-E9
S084-76-672 3-K8
S084-76-677 3-K8
3-M8
B001-76-725 3-N4
B001-76-734 3-N4

****
* *
* 77-000 *
* *
****

8527-77-739 1-I3
1-N4

****
* *
* 88-000 *
* *
****

NA01-88-031 00 2-M15
NA01-88-031 88 2-M15
NA01-88-033 2-K15
NA01-88-034 00 2-K15
NA01-88-034 88 2-K15
NA01-88-035 00 2-E16
NA01-88-035 88 2-E16
NA01-88-036 00 2-L15
NA01-88-036 88 2-L15
N041-88-049 2-G16

NA01-88-081 00 2-E16
NA01-88-081 88 2-E16
NA01-88-083 2-K15
NA01-88-084 00 2-L15
NA01-88-084 88 2-L15
NA01-88-085 00 2-G16
NA01-88-085 88 2-G16
NA01-88-086 00 2-D16
NA01-88-086 88 2-D16
NA01-88-101A 2-L15
NA01-88-102A 2-L15
NA75-88-103 2-L15
H260-88-105 2-L15
NA01-88-106 2-L15
H260-88-107 2-M15
H260-88-108 02 2-L15
NA75-88-108 2-L15
H260-88-109 2-L15
N041-88-110 00 2-M15
N041-88-110A00 2-M15

N043-88-110 88 2-L15
N041-88-111 00 2-M15
N041-88-111A00 2-M15
N043-88-111 88 2-M15
NB40-88-130 00 2-N15
NB41-88-130 00 2-N15
NB42-88-130 00 2-N15
NB43-88-130 88 2-M15
NB43-88-130A88 2-N15
NB43-88-130B88 2-N15
NB44-88-130 88 2-M15
NB44-88-130A88 2-N15
NB47-88-130 88 2-M15
NB47-88-130A88 2-N15
NB49-88-130 88 2-N15
NC00-88-130A00 2-N15
NC01-88-130 00 2-N15
NC02-88-130 00 2-N15
NB40-88-131 00 2-C16
NB42-88-131 00 2-C16

NB43-88-131 88 2-N15
NB43-88-131A88 2-C16
NB44-88-131 88 2-C16
NB44-88-131A88 2-C16
NB47-88-131 88 2-C16
NB47-88-131A88 2-C16
NB49-88-131 88 2-C16
NC00-88-131 00 2-C16
NC01-88-131 00 2-C16
NA01-88-137 2-D16
H261-88-139 2-G16
NA01-88-151A 2-C16
NA01-88-152A 2-C16
NA01-88-153A 2-D16
NA01-88-156 2-D16
N041-88-160 00 2-D16
N041-88-160A00 2-D16
N043-88-160 88 2-D16
N041-88-161 00 2-D16
N041-88-161A00 2-D16

N043-88-161 88 2-D16
NB40-88-180 00 2-E16
NB41-88-180 00 2-E16
NB42-88-180 00 2-E16
NB43-88-180 88 2-E16
NB43-88-180A88 2-E16
NB43-88-180B88 2-F16
NB44-88-180 88 2-E16
NB44-88-180A88 2-E16
NB47-88-180 88 2-E16
NB47-88-180A88 2-E16
NB49-88-180 88 2-F16
NC00-88-180A00 2-F16
NC01-88-180 00 2-F16
NC02-88-180 00 2-F16
NB40-88-181 00 2-F16
NB42-88-181 00 2-F16
NB43-88-181 88 2-F16
NB43-88-181A88 2-F16
NB44-88-181 88 2-F16

NB44-88-181A88 2-G16
NB47-88-181 88 2-F16
NB47-88-181A88 2-G16
NB49-88-181 88 2-G16
NC00-88-181 00 2-G16
NC01-88-181 00 2-G16
NA75-88-710 2-G16
NA75-88-760 2-G16

****
* *
* 90-000 *
* *
****

90620-47614 2-K5
90623-06684 2-K5
90624-26684 2-K5
90625-56684 2-K5

****
* *
* 99-000 *
* *
****

99324-07610 1-E5
99328-04010 3-K8
3-M8
99344-05150 1-M7
99351-04999 1-J7
1-L4
99351-06999 2-I8
2-J6
99351-14999 2-N12
99357-14999 2-J6
99359-0809 1-G4
99359-0815 2-H8
99359-0816 2-I8
99359-0817 2-I8
99359-0818 2-I8

99359-0830M 1-F4
99359-0834 1-F4
99541-00403 2-F7
99541-00603 2-H7
99541-00907 1-G3
99541-01201 1-N7
99541-01601 1-E8
99541-03B01 3-G6
99586-08166 1-D6
99606-63053 1-F6
99606-83020 1-F5
99611-1500 2-E6
99636-04130 2-K5
99636-04140 2-K5
9965B-95540 2-K5
9965C-36050 2-M5
9965E-86050 2-M5
9965F-86050 2-M5
99651-36040 2-M5
99651-96040 2-M5

99652-14040 2-L5
99655-30005 2-K5
99655-30010 2-K5
99655-30015 2-K5
99655-30020 2-K5
99655-30025 2-L5
99655-30030 2-L5
99655-30035 2-L5
99655-30040 2-L5
99655-30045 2-L5
99655-30050 2-L5
99655-30055 2-L5
99655-30060 2-L5
99655-90005 2-L5
99655-90010 2-L5
99655-90015 2-L5
99655-90020 2-L5
99655-90025 2-L5
99655-90030 2-L5
99655-90035 2-L5

99655-90040 2-L5
99655-90045 2-L5
99655-90050 2-L5
99655-90055 2-L5
99655-90060 2-L5
99700-5080 2-J11
99700-7180 2-F11
99701-2070 2-I11
99701-3210 2-F11
99701-3270 2-F11
99701-4278 2-F11
99701-4278Y 2-D11
99701-6030 2-G14
99701-6038 2-C11
2-F11
99705-1130 3-C8
99705-1210 3-M7
99705-1215 3-M7
99705-1220 3-M7
99705-1230 3-M7

99963-6310 1-H6
99963-6315 1-H6
99963-6330 1-H6

****
* A *
****

ACTUATOR,A.C.C.---------- 3-E7
ACTUATOR,SHIFT LOCK------ 2-J8
ADAPTER,DRIVE PLATE------ 1-K7
ADJUSTER NO.3---------- 2-C16
ADJUSTER NO.4---------- 2-D16
ADJUSTER,HYDRAULIC LASH-- 1-M3
ADJUSTER,NO.1---------- 2-L15
ADJUSTER,NO.2---------- 2-L15
ALTERNATOR---------- 1-D7
ANCHOR UNIT(L),BELT------ 2-G16
ANCHOR UNIT(R),BELT------ 2-G16
ANTENNA,RADIO---------- 3-J7
ANTILOCK BRAKE---------- 2-E8
ARM NO.1,LINK---------- 3-D9
ARM NO.2,LINK---------- 3-D9
ARM(L),LOWER---------- 2-H5
ARM(L),LOWER-REAR-------- 2-F4
ARM(L),UPPER---------- 2-H5
ARM(R),LOWER---------- 2-H5
ARM(R),LOWER-REAR-------- 2-F4
ARM(R),UPPER---------- 2-G5
ARM/BASE(L),WINDOW------- 3-E3
ARM/BASE(R),WINDOW------- 3-E3
ARM,UPPER-REAR---------- 2-F4
ARM,WIPER-DRIVER SIDE--- 3-C9
ARM,WIPER-PASS. SIDE----- 3-C9
ARMATURE---------- 1-F7
1-H7
ARMATURE,MAGNETIC CLUTCH- 3-N4
ATTACHMENT,PAD-REAR------ 2-G3
AUDIO SET---------- 3-G7

****
* B *
****

BACK(L),FRONT SEAT------- 2-E16
2-F16
BACK(R),FRONT SEAT------- 2-M15
2-N15
BAG,TOOL---------- 3-K9
BALL JOINT,LOWER--------- 2-I5
BALL,STEEL---------- 1-I7
2-E6
BAND---------- 2-D6
3-H8
3-I4
3-J4
BAND,BRAKE---------- 1-D9
BAND,PIPE---------- 3-H8
BAR,BRACE---------- 2-H13
BAR,REAR SUSPENSION------ 2-H13
BASE,INTERIOR MIRROR----- 3-D5
3-M9
BATTERY---------- 1-J7
BEARING---------- 1-F5
1-H5
2-J3
2-M3
BEARING,BALL---------- 1-F6
1-I6
BEARING,BALL-ALT. FRONT-- 1-D7
BEARING,BALL-ALT. REAR--- 1-D7
BEARING,BALL-COUNTER SHAF 1-H6
BEARING,BALL-FLY WHEEL--- 1-K3
BEARING,BALL-MAIN DRIVE G 1-F6
BEARING,NEEDLE---------- 1-F6
1-G6
1-G9
1-L9
BEARING,PINION---------- 2-H3
2-K4
2-L3
BEARING,ST. GEAR--------- 2-J4
2-L4
BEARING,WHEEL---------- 2-E3
BELT,TIMING---------- 1-M3
BELT'A'(L),FRT SEAT------ 2-H16
2-K15
BELT'A'(R),FRT SEAT------ 2-H16
2-K15
BELT'B'(R),FRT SEAT------ 2-H16
BELT'B',FRT SEAT--------- 2-H16
BELT'V',AIR CON.--------- 1-G5
BELT'V',P/STG. & AIR CON. 1-G5
BELT'V',POWER STEERING--- 1-G5
BELT'V',W/PUMP&ALTERNATOR 1-C7
1-G5
1-N6
BEZEL(L),HEAD LAMP------- 2-M10
BEZEL(R),HEAD LAMP------- 2-M10
BLADE(L),WIPER-FRONT----- 3-C9
BLADE(R),WIPER-FRONT----- 3-C9
BLOCK,CYLINDER---------- 1-G3
BLOCK,FUSE---------- 3-L7
BLOCK,MAIN FUSE---------- 3-C8
BLOWER UNIT---------- 3-F4
BODY & PISTON(L),CALIPER- 2-F3
2-F5
BODY & PISTON(R),CALIPER- 2-F3
2-F5
BODY(L),FRONT DOOR------- 2-J16
BODY(R),FRONT DOOR------- 2-J16
BODY,CONTROL VALVE-UP---- 1-I8
BODY,THROTTLE---------- 1-J4
BODY,VALVE LWR---------- 1-J8
BOLT---------- 1-C8
1-D6
1-D8
1-F8
1-H3
1-H7
1-K7
1-K9
1-L7
1-L8
1-M7
1-M8
1-N9
2-C3
2-D6
2-E10
2-F3
2-F4
2-F10
2-G5
2-H10
2-J5
2-K4
2-M4
2-N4
3-C9
BOLT SET---------- 1-F7
BOLT-HEX,HD WASHER------- 3-I6
BOLT,ADJUST---------- 1-F5
2-F4
2-G5
BOLT,AIR CLEANER--------- 1-H4
BOLT,AIR CON.---------- 3-J4
BOLT,ANCHOR END---------- 1-N7
BOLT,BAFFLE PLATE-------- 1-L7
BOLT,BEARING CAP--------- 1-G3
BOLT,CAMSHAFT CAP-------- 1-E3
BOLT,CARRIER---------- 2-C4
2-K3
BOLT,CLAMP---------- 1-J7
BOLT,COMPRESSOR---------- 3-M4
BOLT,COMPRESSOR-AIR CON.- 3-M4
BOLT,CONNECTOR---------- 2-D8
2-E7
2-G7
2-I7
2-L7
BOLT,CONTROL LINK-------- 2-F4
BOLT,CONTROL VALVE------- 1-E8
1-F8
1-M8
BOLT,COVER-REG. GUIDE---- 3-E3
BOLT,CROSS MEM BR-------- 2-E12
BOLT,CYLINDER HEAD------- 1-E3
BOLT,DECK LOCK---------- 3-M5
BOLT,FILLER PIPE--------- 2-I6
BOLT,FUEL DISTRIBUTOR---- 1-G4
BOLT,GARNISH-RR---------- 2-L11
BOLT,HINGE---------- 2-M10
BOLT,HUB---------- 2-E3
2-E5
BOLT,INST. PANEL--------- 2-I14
3-G7
BOLT,JACK SET---------- 2-M5
BOLT,LAMP LID---------- 2-L10
BOLT,LINK---------- 2-H15
2-L15
BOLT,LOCK---------- 1-K7
BOLT,LOCK-C.SHAFT PULLEY- 1-J3
BOLT,LOCK-FLYWHEEL------- 1-K3
BOLT,MAGNET CLUTCH------- 3-N4
BOLT,MOTOR-RETRACT H/LAMP 2-M10
BOLT,OIL PAN---------- 1-E8
BOLT,PLANT FRAME--------- 2-C6
BOLT,PULLEY---------- 1-J3
BOLT,RING GEAR---------- 2-I3
2-M3
BOLT,SET---------- 2-C10
2-J16
BOLT,SETTING---------- 2-J16
BOLT,SETTING-HINGE LOWER- 2-J16
BOLT,SHAFT---------- 2-I4
BOLT,STARTER---------- 1-C7
BOLT,STOPPER-SOFT TOP---- 3-C6
BOLT,VANE PUMP---------- 2-N4
BONNET---------- 2-M11
BOOT SET,INNER JOINT----- 2-D3
BOOT SET,OUTER JOINT----- 2-D3
BOOT SET,ST. GEAR-------- 2-J4
BOOT,CHANGE---------- 2-L14
BOOT,DUST-CHANGE LEVER--- 1-L6
BOOT,GUIDE PIN---------- 2-F3
BOOT,MOTOR-RETRACT H/L--- 2-M10
BOOT,RACK---------- 2-L4
BOOT,TOP---------- 3-L5
BOSS,PULLEY---------- 1-J3
BOSS,STEERING WHEEL------ 2-H4
BOSS,W.PUMP PULLEY------- 1-C5
BOX(L),TORQUE---------- 2-F12
BOX(R),TORQUE---------- 2-F12
BOX,A.C.C.---------- 3-E7
BOX,COIN-CONSOLE--------- 2-L14
BOX,CONTROL-A.B.S.------- 3-N6
BOX,GLOVE---------- 2-J14
BOX,INSTRUMENT PANEL----- 2-I14
3-K6
BRACKET---------- 1-E8
1-M7
2-E13
2-M7
3-E8
3-G7
3-J8
3-L7
BRACKET NO 1,A.B.S.------ 2-D8
BRACKET NO 2,A.B.S.------ 2-D8
BRACKET(L),CABLE--------- 2-G3
BRACKET(L),ENGINE-------- 2-C6
BRACKET(L),F. BUMPER SIDE 2-F10
BRACKET(L),FRONT-AUDIO--- 3-G7
BRACKET(L),HINGE-LAMP LID 2-M10
BRACKET(L),INST.--------- 2-I12
BRACKET(L),RADIATOR------ 2-D12
BRACKET(L),STABILIZER---- 2-F12
BRACKET(R),CABLE--------- 2-G3
BRACKET(R),ENGINE-------- 2-C6
BRACKET(R),FRONT-AUDIO--- 3-G7
BRACKET(R),HINGE-LAMP LID 2-M10
BRACKET(R),INST.--------- 2-I12
BRACKET(R),RADIATOR------ 2-D12
BRACKET(R),STABILIZER---- 2-E12
BRACKET(RR),AUDIO-------- 3-G7
BRACKET,A.B.S ---------- 3-C7
BRACKET,ACCEL WIRE------- 1-C4
BRACKET,ACTUATOR--------- 3-E7
BRACKET ACTUATOR-A.C.C.-- 3-E7
BRACKET,ACTUATOR-FRONT--- 3-E7
BRACKET,AIR CLEANER------ 1-H4
BRACKET,BATTERY CLAMP---- 1-J7
BRACKET,BOOST SENSOR----- 3-H6
BRACKET,BUMPER---------- 2-D12
BRACKET,CANISTER--------- 1-E4
BRACKET,CLAMP---------- 3-I4
BRACKET,CLIP---------- 2-L10
BRACKET,COMPRESSOR------- 1-F5
BRACKET,CONDENSER-------- 3-G6
BRACKET,CONTROL UNIT ---- 2-C7
3-I6
BRACKET,COUPLER---------- 2-H4
BRACKET,COUPLER-KNOCK SEN 3-G6
BRACKET,COUPLER-O2 SENSOR 3-I6
BRACKET,CRASH PAD-------- 2-I14
BRACKET,E.G.R.PIPE------- 1-L4
BRACKET,FENDER---------- 2-F10
2-K12
BRACKET,FRONT---------- 1-F7
1-H7
BRACKET,GRILLE-C--------- 2-H12
BRACKET,HANGER---------- 2-D6
BRACKET,HARNESS---------- 3-C8
3-E8
3-L7
3-N7
BRACKET,HARNESS-ENGINE--- 3-L7
BRACKET,HOSE---------- 3-H4
BRACKET,IDLE PULLEY------ 1-F5
BRACKET,IGNITER---------- 3-H6
BRACKET,JACK---------- 2-C13
BRACKET,LAMP---------- 2-J11
BRACKET,LICENCE PLATE---- 2-F10
BRACKET,LOUD SPEAKER----- 3-K7
BRACKET,MASTER CYL.------ 2-C7
2-L6
2-M6
BRACKET,MEMBER---------- 2-I14
BRACKET,OIL PUMP--------- 3-G6
BRACKET,PARKING CABLE-FLO 2-D13
BRACKET,PIPE---------- 3-I4
BRACKET,PLANT FRAME------ 2-C6
BRACKET,REAR---------- 1-F7
1-H7
BRACKET,REAR CONSOLE----- 2-L14
BRACKET,RELAY---------- 3-C7
3-J4
3-N6
BRACKET,RELAY-INTERLOCK-- 3-N6
BRACKET,SEAT LOCK-RR----- 2-H15
BRACKET,STARTER---------- 1-C7
BRACKET,STOPPER-BATTERY-- 1-J7
BRACKET,TUNER---------- 3-G7
BRACKET,VANE PUMP-------- 2-C5
2-N4
BRACKET,WASHER TANK------ 3-J8
3-M8
BRACKET,WIRE CLIP-OXYGEN- 3-H6
BRACKET,WIRING---------- 3-C8
3-M7
BREATHER---------- 1-M7
2-H3
2-L3
BREATHER,AIR-T/MISSION--- 1-D6
BRKT(L),BUMPER-RR SKIRT-- 2-E13
BRKT(L),SEAT-F.FLOOR PAN- 2-D13
BRKT(L),TRK.BOARD-FENDER- 2-N12
BRKT(R),BUMPER-RR SKIRT-- 2-E13
BRKT(R),SEAT-F.FLOOR PAN- 2-C13
BRKT,AIR BAG MODULE------ 2-I16
BRKT,AIR CLNR-WHL APRON-- 2-E12
BRKT,BATT.CLAMP-QTR PANEL 2-J12
BRKT,CAP-QUARTER PANEL--- 2-M12
BRKT,MOTOR-ANTENNA------- 3-J7
BRKT'A',WASHER TANK-FRT-- 3-L8
BRUSH---------- 1-D7
1-G7
BRUSH,YOKE---------- 1-G7
1-I7
BULB---------- 2-C11
2-D11
2-F11
2-G14
2-H14
BULB---------- 2-I11
2-J11
2-L14
BULB & SOCKET---------- 2-L14
BULB,INTERIOR MIRROR----- 2-J11
BULB,MODE CONTROL-------- 3-E4
BULB,RESISTOR---------- 2-C14
2-G14
BULB'B',SWITCH-RR DEFOGER 3-K6
BUMPER,FRONT---------- 2-E10
BUMPER,REAR---------- 2-H10
BUSH---------- 1-K6
2-D7
2-G6
2-J8
2-L6
2-M6
BUSH SET,CHANGE LEVER---- 1-L6
BUSH,ELBOW JOINT--------- 2-E6
2-F7
2-H7
BUSH,HINGE---------- 2-L15
BUSH,RUBBER---------- 1-E8
BUSH,RUBBER-LWR ARM------ 2-H5
BUSH,STABILIZER-RR------- 2-E4
BUSHING,LOWER ARM-------- 2-F4
BUSHING,RACK-ST. GEAR---- 2-K4
BUSHING,RUBBER---------- 2-F4
2-I5
BUSHING,RUBBER-LOWER ARM- 2-F4
2-I5
BUTTON,RELEASE---------- 2-F8

****
* C *
****

CABLE(L),R.-PARK.-------- 2-G8
CABLE(R),R.-PARK.-------- 2-G8
CABLE,ACCEL.---------- 2-G6
CABLE,F/LID OPENER------- 2-K6
CABLE,PARKING-FRT-------- 2-F8
CABLE,SPEEDMETER--------- 2-F14
CABLE,T/LID OPENER------- 2-K6
CALIPER(L),PADLESS-FR---- 2-F5
CALIPER(L),PADLESS-RR---- 2-G3
CALIPER(R),PADLESS-FR---- 2-F5
CALIPER(R),PADLESS-RR---- 2-G3
CAM,CANCEL-COMB. SW.----- 3-M6
CAM,CHANGE LEVER--------- 2-J8
CAMSHAFT---------- 1-M3
CAMSHAFT,EXHAUST--------- 1-N3
CANISTER---------- 1-E4
CAP---------- 2-G11
2-J10
3-D3
3-G3
3-H8
3-K6
CAP SET,RESERVE TANK----- 2-E6
2-E7
2-G7
CAP(L),PULL HANDLE------- 3-J3
CAP(R),PULL HANDLE------- 3-J3
CAP,BLEEDER SCREW-------- 2-E6
2-E10
2-F5
2-G3
CAP,BLIND---------- 1-C4
CAP,CENTER---------- 2-K5
CAP,COLUMN COVER--------- 2-C14
CAP,DAMPER---------- 2-G5
CAP,FILLER---------- 2-I6
CAP,HINGE-H.L.RETRACTABLE 2-M10
CAP,HUB---------- 2-E5
CAP,OIL FILLER---------- 1-F3
CAP,OUTLET---------- 3-K6
CAP,PARK BRAKE LEVER----- 2-F8
CAP,RADIATOR---------- 1-D5
CAP,SEAL-TRUNK END TRIM-- 3-G9
CAP,SPRING---------- 1-L6
1-M6

CAP,SUB TANK---------- 1-E5
CAP,TANK---------- 3-K8
3-M8
CAP,TOP LOCK---------- 3-G5
CAP,VANE PUMP TANK------- 2-C5
CARRIER,DIFFERENTIAL----- 2-H3
2-L3
CARRIER,FRONT---------- 1-F9
CARRIER,OVER DRIVE------- 1-I9
CARRIER,REAR---------- 1-F9
CARTRIDGE,OIL FILTER----- 1-N4
CASE,CHANGE CONTROL------ 1-L6
CASE,DIFF. GEAR---------- 2-I3
CASE,LAMP---------- 2-N14
CASE,METER---------- 2-G14
CASE,T/MISSION---------- 1-D6
1-N7
CASE'A',BLOWER UNIT------ 3-F4
CASE'A',COOLING UNIT----- 3-C5
CASE'A',HEATER UNIT------ 3-D4
CASE'B',BLOWER UNIT------ 3-F4
CASE'B',COOLING UNIT----- 3-C5
CASE'B',HEATER UNIT------ 3-D4
CASE'OUT',ASHTRAY------- 2-D14
CASING,DIFFERENTIAL------ 2-C4
2-K3
CASING,STOPPER---------- 2-C6
CATALYST,THREE WAY------- 2-D6
CEILING,TOP---------- 3-D6
CHANNEL(L),DIVISION-DOOR- 2-K16
CHANNEL(R),DIVISION-DOOR- 2-K16
CHECKER,DOOR---------- 3-C3
CLAMP---------- 2-G14
CLAMP,BATTERY---------- 1-J7
CLAMP,HOSE---------- 1-E4
1-H4
1-K4
CLAMP,WATER HOSE--------- 1-E5
1-K4
1-N4
CLEANER,AIR---------- 1-H4
CLIP---------- 1-E4
1-G4
1-J3
1-K4
1-L7
1-L8
1-M8
2-C12
2-D3
2-D8
2-E10
2-F10
2-F14
2-G8
2-G11
2-H6
2-H8
2-K6
2-L10
2-L11
3-C3
3-D4
3-E4
3-F3
3-F9
3-H6
3-H8
3-I4
3-I6
3-I8
3-J6
3-J8
3-L8
CLIP (L)---------- 3-C3
CLIP (R)---------- 2-C10
3-C3
CLIP SET,DRIVE SHAFT----- 2-D3
CLIP(L),FORM PLATE------- 3-G5
CLIP(R),FORM PLATE------- 3-G5
CLIP,CABLE---------- 2-G8
CLIP,ENGINE HARNESS------ 3-I8
CLIP,FLEXIBLE HOSE------- 2-F6
2-F8
CLIP,FLEXIBLE HOSE------- 2-I7
2-L7
CLIP,HARNESS---------- 3-H8
3-I8
3-L8
3-N6
CLIP,HARNESS-HAND BRAKE-- 2-N14
CLIP,HEATER CONTROL------ 3-E4
CLIP,HOSE---------- 1-F3
CLIP,HOSE-SUB T.& WATER H 1-E5
CLIP,OIL PIPE---------- 1-M7
CLIP,PIPE---------- 2-F6
2-H8
2-I8
2-J7
2-M7
2-N11
3-H4
CLIP,RR BRAKE PIPE------- 2-I7
2-L7
CLIP,SEAL---------- 2-J4
CLIP,SENSOR HARNESS------ 2-E8
CLIP,TRIM---------- 3-E10
3-F9
3-H9
CLIP,VALVE GUIDE--------- 1-E3
CLIP,WASHER HOSE--------- 3-J8
3-L8
CLIP,WEATHERSTRIP-OUTER-- 3-G3
CLIP,WIRE---------- 2-J4
3-H6
CLIP'A',SPEEDOMETER CABLE 2-F14
CLIP'A',WEATHERSTRIP-OUT- 3-G3
CLIP'B'(L),DOOR LOCK----- 2-C10
CLIP'B',WIRE-BONNET------ 2-H12
CLOTH,REPAIR-TOP--------- 3-F5
CLOTH'C',TOP---------- 3-F5
CLUTCH,DIRECT---------- 1-H9
CLUTCH,FRONT---------- 1-D9
CLUTCH,MAGNET---------- 3-N4
CLUTCH,ONE WAY---------- 1-I9
1-K9
CLUTCH,OVER RUNNING------ 1-F7
CLUTCH,REAR---------- 1-F9
COCK,DRAIN---------- 1-D5
COIL & IGNITER---------- 1-N6
COIL,FIELD-MAGNET CLUTCH- 3-N4
COLLAR---------- 1-F5
COLLAR,CLUTCH REL.------- 1-C6
COMPRESSOR---------- 3-N4
COMPRESSOR,AIR CON.------ 3-M4
CONDENSER---------- 3-I4
CONNECTING,SHELL--------- 1-I9
CONNECTOR---------- 1-E4
CONNECTOR,SHORT---------- 3-E8
CONNECTOR,TUBE-BATTERY--- 1-J7
CONSOLE,REAR---------- 2-L14
2-M14
2-N14
CONTROL,COOLANT FAN------ 3-K4
CONTROL,HEATER---------- 3-E4
CONVERTER,TORQUE--------- 1-K7
COOLER,OIL---------- 1-M4
CORD---------- 3-J7
CORD NO.1,HI.TENSION----- 1-N6
CORD NO.2,HI.TENSION----- 1-N6
CORD NO.3,HI.TENSION----- 1-N6
CORD NO.4,HI.TENSION----- 1-N6
CORD SET,HI.TENSION------ 1-N6
CORD,EARTH---------- 3-G7
3-H7
3-K7
CORE,HEATER UNIT--------- 3-D4
COTTER,VALVE-IN.--------- 1-M3
COUPLER,SOLENOID VALVE--- 1-F8
COVER---------- 2-F8
2-H13
COVER(L),BELT LINE------ 3-C6
COVER(L),BRACE BAR------- 2-H13
COVER(L),DECK LOCK------- 3-N5
COVER(L),DRAIN-SOFT TOP-- 3-J5
3-K5
COVER(L),DUST---------- 2-E5
COVER(L),HINGE---------- 2-G16
COVER(L),HOLE---------- 3-I9
COVER(L),KNUCKLE--------- 2-E16
COVER(L),SEAT BACK------- 2-D16
COVER(R),BELT LINE------- 3-N5
COVER(R),BRACE BAR------- 2-H13
COVER(R),DECK LOCK------- 3-M5
COVER(R),DRAIN-SOFT TOP-- 3-J5
COVER(R),DUST---------- 2-E5
COVER(R),HINGE---------- 2-E16
COVER(R),HOLE---------- 3-I9
COVER(R),KNUCKLE--------- 2-M15
COVER(R),SEAT BACK------- 2-L15
COVER(UP.),TIMING CHAIN-- 1-H3
COVER,AIR CLEANER-------- 1-I4
COVER,ANCHOR---------- 2-H16
COVER,BAFFLE-COWL PANEL-- 2-H12
COVER,BATTERY---------- 3-I9
COVER,BEARING---------- 1-D6
COVER,BLIND---------- 1-L7
1-M6
COVER,CLUTCH---------- 1-C6
COVER,COLUMN-LOWER------- 2-C14
COVER,COLUMN-UPPER------- 2-C14
COVER,CYLINDER HEAD------ 1-E3
COVER,DUST---------- 2-E3
2-H6
2-L4
COVER,DUST-CLUTCH FORK--- 1-C6
COVER,DUST-ST. GEAR------ 2-J4
COVER,END PLATE---------- 1-I3
COVER,FRONT CLUTCH------- 1-C6
COVER,FRONT-ALTERNATOR--- 1-D7
COVER,FUEL FILTER-------- 2-H13
COVER,FUSE BLOCK--------- 3-L7
COVER,GRILLE---------- 2-F10
COVER,HEAD REST---------- 2-D16
COVER,HOLE---------- 2-C14
2-F13
2-H16
3-D6
3-E10
3-G7
3-I3
3-K6
COVER,HOLE-(C)---------- 2-J14
COVER,HOLE-ANTENNA------- 3-J7
COVER,INNER HANDLE------- 3-C3
COVER,JOINT-LOWER-------- 2-I4
COVER,JOINT-UPPER-------- 2-I4
COVER,LEVER-OPENER------- 2-L14
COVER,MAIN FUSE BLOCK---- 3-C8
COVER,OIL PUMP---------- 1-M4
COVER,REAR---------- 1-I3
2-K4
COVER,REAR-ALTERNATOR---- 1-D7
COVER,RELAY---------- 3-C7
COVER,ROD---------- 1-M6
COVER,SELECT LEVER------- 2-J8
COVER,SERVICE HOLE------- 2-I12
COVER,SERVO---------- 1-C8
COVER,SIDE---------- 2-J14
COVER,SPARE TIRE--------- 3-I9
COVER,THERMO---------- 1-C5
COVER,THERMOSTAT--------- 1-D5
COVER,TIMING BELT-C------ 1-H3
COVER,TIMING BELT-LWR---- 1-H3
COVER,UNDER---------- 2-H13
COVER,VALVE BODY--------- 1-K8
COVER,WASHER TANK-------- 3-M8
COVER,WHEEL CORE--------- 2-H4
COVER,WIPER ARM-FRONT---- 3-D9
COVER'L',HYDRAULIC UNIT-- 2-D8
COWLING,RADIATOR--------- 1-E5
CRANKSHAFT---------- 1-J3
CUP,SECONDARY---------- 2-H7
CUSHION(L),FRT SEAT------ 2-D16
CUSHION(R),FRT SEAT------ 2-L15
2-M15
CUSHION,LID HINGE-------- 2-C12
CUSHION,RUBBER---------- 2-I14
2-L14
CYL.,CLUTCH MASTER------- 2-E6
CYL.,CLUTCH RELEASE------ 2-E6
CYL.,TANDEM MASTER------- 2-E7
CYL.,TANDEM MASTER------- 2-H7

****
* D *
****

DAM---------- 3-D5
DAM,REAR-WIND.---------- 3-D5
3-D6
DAMPER,FRONT---------- 2-I5
DAMPER,REAR---------- 2-D4
DIAPHRAGM,VACUUM--------- 1-D8
DIFFERENTIAL---------- 2-M3
DISC,CLUTCH---------- 1-C6
DISTRIBUTOR,FUEL--------- 1-G4
DISTRIBUTOR,OIL---------- 1-K9
DOVETAIL,LIFT GATE------- 3-F3
DRIVING & DIFF.---------- 2-H3
2-L3
DRUM(L),POWER WINDOW REG- 3-E3
DRUM(R),POWER WINDOW REG. 3-D3
DRUM,CLUTCH---------- 1-D9
DRUM,CONNECTING---------- 1-K9
DRUM,DIRECT---------- 1-H9
DRUM,REAR CLUTCH--------- 1-F9
DUCT(L)---------- 2-D15
DUCT(L),SIDE DEMI.------- 2-D15
DUCT(R)---------- 2-D15
DUCT(R),SIDE DEMI.------- 2-D15
DUCT,AIR---------- 3-C4
DUCT,CENTER---------- 2-D15
DUCT,FRESH AIR---------- 1-H4

****
* E *
****

ELEMENT,AIR CLEANER------ 1-H4
EMBLEM,CAP-WHEEL--------- 2-K5
END,CONTROL LEVER-------- 1-L6
END,S/ROD(1ST&2ND)------- 1-K6
END,S/ROD(3RD&4TH)------- 1-K6
END,SHIFT ROD(O/TOP&REV.) 1-L6
ENGINE,PARTIAL---------- 1-D3
ENGINE,SHORT---------- 1-D3
ESCUTCHEON---------- 3-D3
EVAPORATOR---------- 3-C5

****
* F *
****

FABRIC,TOP-SOFT TOP------ 3-F5
FAN DRIVE---------- 1-E5
FAN,CONDENSER---------- 3-J4
FAN,COOLING---------- 1-C5
FASTENER---------- 2-E10
2-G10
2-G12
2-H10
2-H12
2-I13
2-L16
3-D6
3-E10
3-G3
3-H9
3-I8
3-J9
3-M8
FASTENER SET,TOP CLOTH--- 3-F5
FASTENER,BONNET RELEASE-- 2-M11
FASTENER,DOOR TRIM------- 2-K14
3-G3
3-H3
FASTENER,LIFT GATE TRIM-- 3-K7
FASTENER,RAIN RAIL-REAR-- 3-G5
FASTENER,RAIN RAIL-SIDE-- 3-G5
FASTENER,REAR BUMPER----- 2-G10
2-H10
FASTENER,SEAL---------- 3-J9
3-K7
FEEDER-ANTENNA---------- 3-J7
FILTER,AIR---------- 3-G6
FILTER,FUEL---------- 1-E4
FILTER,FUEL PUMP--------- 2-H6
FINISHER,REAR---------- 2-L11
FLANGE---------- 1-K9
FLANGE,COMPANION--------- 2-H3
2-L3
FLANGE,DRIVE---------- 1-K9
FLOAT---------- 2-E7
2-G7
FORK,BRAKE---------- 2-D7
2-M6
FORK,CLUTCH---------- 2-L6
FORK,CLUTCH RELEASE------ 1-C6
FORK,SHIFT---------- 1-K6
FORK,SHIFT (1ST & 2ND)--- 1-K6
FORK,SHIFT (3RD & 4TH)--- 1-K6
FRAME(L),FRONT---------- 2-F12
FRAME(L),FRONT-REAR------ 2-F12
FRAME(L),REAR SIDE------- 2-D13
FRAME(R),FRONT---------- 2-E12
FRAME(R),REAR SIDE------- 2-C13
2-D13
FRAME(UP.,L),FRONT-FRT--- 2-F12
FRAME(UP.,R),FRONT-FRT--- 2-E12
FRAME(UP.L),FRONT-REAR--- 2-F12
FRAME(UP.R),FRONT-REAR--- 2-E12
FRAME,FRONT-FRT FLOOR PAN 2-D13
FRAME,INST. PANEL-------- 2-I14
FRAME,POWER PLANT-------- 2-C6
FUSE---------- 3-M7
FUSE (30A)---------- 3-C8
3-L7
FUSE (40A)---------- 3-C8
FUSE (80A)---------- 3-C8

****
* G *
****

GASKET---------- 1-C8
1-F3
1-I7
1-K4
1-M4
2-C7
2-J6
2-L6
2-L11
GASKET & SEAL KIT-------- 1-D10
GASKET KIT,COMPRESSOR---- 3-M4
GASKET SET,CYL. HEAD----- 1-D3
GASKET SET,ENGINE-------- 1-D3
GASKET SET,PARTIAL ENGINE 1-D3
GASKET(C),TIMING BELT(L)- 1-H3
GASKET(INN),TIMING BELT(L 1-H3
GASKET(L)---------- 1-H3
GASKET,COMPRESSOR-------- 3-M4
GASKET,CONVERTER--------- 2-D6
GASKET,COVER PLATE------- 1-L6
GASKET,CYLINDER HEAD----- 1-F3
GASKET,DRAIN PLUG-------- 2-H6
GASKET,DRUM SUPPORT------ 1-F8
GASKET,E.G.R. VALVE------ 1-K4
GASKET,EX.MANIFOLD------- 1-D4
GASKET,EXH.PIPE-CONVERTER 2-D6
GASKET,EXTENSION--------- 1-D8
GASKET,FILLER PIPE------- 2-H6
GASKET,FRONT COVER------- 1-C6
GASKET,HEAD COVER-------- 1-E3
GASKET,IN.MANIFOLD------- 1-C4
GASKET,LICENSE LAMP------ 2-I11
GASKET,O/DRIVE CASE------ 1-F8
GASKET,OIL PAN---------- 1-E8
1-H3
GASKET,OIL PUMP---------- 1-K7
GASKET,OIL STRAINER------ 1-M4

GASKET,RR COMB.---------- 2-G11
GASKET,SIDE TURN--------- 2-C11
GASKET,SPRING CAP-------- 1-L6
GASKET,STOP LAMP-HI.MOUNT 2-G11
GASKET,THERMO---------- 1-J4
GASKET,THERMOSTAT COVER-- 1-D5
GASKET,VAC POWER ASSIST- 2-E7
2-G7
GASKET,W.PUMP INLET------ 1-C5
GASKET,WATER PUMP-------- 1-C5
GASKET,WINDOW REGULATOR-- 3-E3
GASKET'A',DUST COVER----- 2-I6
GAUGE,FUEL TANK--------- 2-J6
GAUGE,OIL LEVEL---------- 1-E8
1-G3
GEAR---------- 1-I7
GEAR SET,DRIVEN-SPEED---- 1-N7
GEAR SET,FINAL---------- 2-H3
2-L3
GEAR,ADJUST---------- 2-F3
GEAR,COUNTER---------- 1-I6
GEAR,COUNTER REVERSE----- 1-H6
GEAR,COUNTER SHAFT------- 1-H6
GEAR,DIFF.SIDE---------- 2-I3
GEAR,DRIVEN---------- 1-D6
GEAR,INNER---------- 1-M4
GEAR,INTERNAL---------- 1-F9
1-K9
GEAR,INTERNAL-STARTER---- 1-H7
GEAR,MAIN DRIVE--------- 1-F6
GEAR,OUTER---------- 1-M4
GEAR,OVER DRIVE--------- 1-I9
GEAR,OVER TOP---------- 1-I6
GEAR,REVERSE---------- 1-H6
GEAR,REVERSE IDLE-------- 1-I6
GEAR,RING-FLY WHEEL------ 1-K3
GEAR,SHAFT---------- 3-E9
GEAR,SPEEDO.DRIVE-------- 1-I6
1-K9
GEAR,STEERING---------- 2-J4
2-L4
GEAR,SUN---------- 1-F9
GEAR,1ST---------- 1-G6
GEAR,2ND---------- 1-G6
GEAR,3RD---------- 1-F6
GENERATOR,PULSE---------- 1-G8
GLASS(L),DOOR-FRT-------- 2-K16
GLASS(L),VENTILATOR------ 2-L16
GLASS(R),DOOR-FRT-------- 2-K16
GLASS(R),VENTILATOR------ 2-K16
2-L16
GLASS,BACK WINDOW-------- 3-D5
3-D6
GLASS,WINDSHIELD--------- 3-D5
GRILLE(L),DEMISTER------- 2-D15
GRILLE(R),DEMISTER------- 2-D15
GRILLE,COWL---------- 2-J10
GRILLE,SPEAKER---------- 3-G3
GROMMET---------- 1-G4
2-G13
2-I4
3-C4
3-E7
3-I8
3-J4
3-K7
GROMMET,BRAKE PEDAL------ 2-M6
GROMMET,DRAIN HOSE-TOP--- 3-J5
GROMMET,KNOB-METER SET--- 2-G14
GROMMET,SCREW---------- 2-H12
2-J10
2-K10
2-K16
2-L10
3-D6
3-G9
3-J3
GROMMET,SCREW-BAFFLE----- 2-H12
GROMMET,SCREW-DOOR GLASS- 2-K16
GROMMET,SCREW-RETAINER--- 3-I5
GROMMET,WASHER TANK------ 3-K8
3-L8
3-M8
GUARD(L),MUD---------- 2-G12
GUARD(R),MUD---------- 2-F12
GUIDE,AIR---------- 2-E10
GUIDE,VALVE---------- 1-F3
GUIDE'A'(L),GLASS-------- 2-K16
GUIDE'B'(R),GLASS-------- 2-K16
GUSSET NO.3(L),C.FLOOR PA 2-D13
GUSSET NO.3(R),C.FLOOR PA 2-C13
GUSSET(L),REAR FENDER-RR- 2-M12
GUSSET(L),SIDE SILL OUTER 2-M12
GUSSET(R),REAR FENDER-RR- 2-K12
GUSSET(R),SIDE SILL OUTER 2-J12
GUSSET,FRONT FLOOR PAN--- 2-D13

****
* *
* H *
* *
****

HANDLE(L),INNER---------- 3-C3
HANDLE(L),OUTER---------- 3-D3
HANDLE(R),INNER---------- 3-C3
HANDLE(R),OUTER---------- 3-D3
HANDLE,JACK---------- 2-M5
HANDLE,REGULATOR--------- 3-D3
HANDLE,SOFT TOP---------- 3-H5
HANGER,ENGINE---------- 1-F3
HANGER,ENGINE-REAR------- 1-F3
HANGER,SILENCER---------- 2-D6
HARNESS NO.2,REAR-------- 3-D6
HARNESS,DOOR---------- 2-F8
HARNESS,ENGINE---------- 3-C6
3-D8
HARNESS,FRONT---------- 3-L7
3-M7
HARNESS,INSTRUMENT------- 3-E8
HARNESS,REAR---------- 3-M7
HARNESS,ROOM LAMP-------- 3-M7
HARNESS,WIRE---------- 3-J4
HARNESS'NO.2',FRONT------ 3-M7
HEAD,CYL.-COMPRESSOR----- 3-M4
HEAD,CYLINDER---------- 1-E3
HEAD,ZIPPER-BACK WINDOW-- 3-G5
HEADER,FRONT---------- 2-L12
HEADER,FRONT-UPPER------- 2-L12
HEATER UNIT---------- 3-D4
HINGE---------- 2-N14
HINGE(L),BONNET---------- 2-M11
HINGE(L),DOOR-LOWER------ 2-J16
HINGE(L),DOOR-UPPER------ 2-J16
HINGE(L),LID-LAMP-------- 2-M10
HINGE(L),TRUNK LID------- 2-C12
HINGE(R),BONNET---------- 2-M11
HINGE(R),DOOR-LOWER------ 2-J16
HINGE(R),DOOR-UPPER------ 2-J16
HINGE(R),GLOVE LID------- 2-J14
HINGE(R),LID-LAMP-------- 2-M10
HINGE(R),TRUNK LID------- 2-C12
HOLDER,BALANCE SPRING---- 2-C12
HOLDER,BRAKE PIPE-------- 2-L7
HOLDER,BRUSH---------- 1-G7
1-I7
HOLDER,CLUTCH---------- 2-F6
HOLDER,JACK HANDLE------- 2-J6
HOLDER,NO. PLATE--------- 2-E10
HOLDER,P.B.VALVE--------- 2-E7
2-G7
HOLDER,PIPE---------- 2-F6
2-H8
2-J7
2-M7
2-M11
HOLDER,PLATE---------- 2-D7
HOLDER,ROD---------- 2-M11
2-N11
HOLDER,SOCKET---------- 1-F8
HOLDER,STEERING GEAR---- 2-M4
HOLDER'A'---------- 2-H8
HOLDER'B',PIPE---------- 2-I8
HOLDER'C'.PIPE---------- 2-I8
HOOD,METER---------- 2-E14
HOOK(L),TIE DOWN--------- 2-I13
HOOK(L),TIE DOWN-FRONT--- 2-G12
HOOK(R),TIE DOWN--------- 2-I13
HOOK(R),TIE DOWN-FRONT--- 2-G12
HOOK,HOOD-REAR CORNER---- 3-C6
HOOK,REAR DECK---------- 3-C6
HOOK,SOFT TOP-REAR DECK-- 3-H5
HOOK,TOP BOOT---------- 3-C6
HORN,LOW TONE---------- 3-D7
HOSE---------- 1-F4
1-G4
1-J7
1-L4
1-M7
2-I8
2-J6
2-N12
HOSE NO.1,WATER---------- 3-C4
HOSE NO.2,BREATHER------- 2-I6
HOSE NO.2,WATER---------- 3-C4
HOSE(C),DEFROSTER-------- 2-D15
HOSE(L),FLEXIBLE-FRT----- 2-I7
2-J7
2-M7
HOSE(L),FLEXIBLE-RR------ 2-I7
2-L7
HOSE(R),FLEXIBLE-FRT----- 2-I7
2-L7
HOSE(R),FLEXIBLE-RR------ 2-I7
2-L7
HOSE,AIR---------- 1-H4
HOSE,CLUTCH FLEXIBLE----- 2-F6
HOSE,DRAIN---------- 1-E4
3-I4
HOSE,EVAPORATION--------- 1-E4
HOSE,FILLER---------- 2-H6
HOSE,FLEXIBLE-HIGH------- 3-H4
HOSE,FLEXIBLE-LOW-------- 3-H4
HOSE,FUEL---------- 1-E4
2-H8
2-I6
HOSE,FUEL PUMP-IN TANK--- 2-H6
HOSE,FUEL-EGI---------- 1-E4
HOSE,OIL---------- 1-L7
1-M7
HOSE,P.C.V.---------- 1-F3
HOSE,PRESSURE---------- 2-N4
HOSE,RETURN---------- 2-C5
HOSE,VACUUM---------- 1-L7
2-E7
2-G7
HOSE,VENT.-PURGE CONT. V. 1-F3
HOSE,VENTILATION--------- 1-E4
HOSE,WATER---------- 1-D5
1-E5
1-K4
3-D4
HOSE,WATER BY-PASS------- 1-C5
HOSE,WATER-OIL COOLER IN. 1-N4
HOSE'C',WASHER---------- 3-J8
3-M8
HOUSING(L),LAMP-LID HINGE 2-M10
HOUSING(L),LAMP-RR FENDER 2-M12
HOUSING(R),LAMP-LID HINGE 2-M10
HOUSING(R),LAMP-RR FENDER 2-K12
HOUSING,CONVERTER-------- 1-K7
HOUSING,EXTENSION-------- 1-D6
1-D8
HOUSING,GEAR---------- 2-J4
2-L4
HUB SET,CLUTCH-O.T. & REV 1-J6
HUB SET,CLUTCH-1ST & 2ND- 1-G6
HUB SET,CLUTCH-3RD & 4TH- 1-F6
HUB,CLUTCH---------- 1-F6
1-G6
1-J6
HUB,O/DRIVE CLUTCH------- 1-I9
HUB,REAR CLUTCH---------- 1-F9
HUB,WHEEL---------- 2-E3
2-E5

****
* *
* I *
* *
****

IDLER,TIMING BELT-------- 1-N3
INDICATOR---------- 2-J8
INJECTION,FUEL-M.P.ELECT. 1-G4
INLET,WATER PUMP--------- 1-C5
INSERT---------- 2-J6
INSULATOR---------- 1-H4
2-I13
INSULATOR NO.1,CHANGE--- 2-N14
INSULATOR,BALK HEAD PANEL 2-I12
INSULATOR,CHG LEVER------ 1-M6
INSULATOR,DASHBOARD------ 3-I9
INSULATOR,EX.MANIFOLD---- 1-D4
INSULATOR,FRONT---------- 2-I13
INSULATOR,FUEL DIST.----- 1-G4
INSULATOR,HEAT---------- 1-D4
INSULATOR,INJECTION------ 1-G4
INSULATOR,RR FLOOR------- 3-I9

****
* *
* J *
* *
****

JACK---------- 2-M5
JET,OIL---------- 1-G3
JOINT---------- 1-G3
1-J7
3-C3
3-L8
JOINT SET,BALL---------- 2-K4
2-M4
JOINT SET,INNER---------- 2-D3
JOINT SET,OUTER---------- 2-D3
JOINT,BACK WINDOW MOULD-- 3-D5
3-D6
JOINT,BALL---------- 2-K4
2-M4
JOINT,ELBOW-W.TANK------- 3-J8
3-M8
JOINT,HOSE---------- 3-J8
3-L8
JOINT,PIPE---------- 2-D8
2-E7
2-G7
JOINT,STEERING---------- 2-I4
JOINT'T'---------- 2-H6
JUNCTION(L),CORNER-Q/PANE 2-L12
JUNCTION(L),FRT. FLOOR--- 2-D13
JUNCTION(R),FRT. FLOOR--- 2-C13
JUNCTION,DASH SIDE-S.SILL 2-H12

****
* *
* K *
* *
****

KEY SET---------- 2-C10
KEY SUB SET(L),DOOR------ 2-C10
KEY SUB SET(R),DOOR------ 2-C10
KEY SUB SET,CONSOLE------ 2-D10
KEY SUB SET,GLOVE-------- 2-C10
KEY SUB SET,ST. LOCK----- 2-C10
2-D10
KEY SUB SET,TRUNK-------- 2-C10
KEY,BLANK-PRIMARY-------- 2-D10
KEY,BLANK-SECONDARY------ 2-D10
KEY,PRIMARY---------- 2-C10
KEY,SECONDARY---------- 2-C10
KEY,SYNCHRONIZER--------- 1-G6
KEY,WOODRUFF-PULLEY------ 1-J3
KNOB NO.1---------- 3-E4
KNOB(L),KNUCKLE---------- 2-L15
KNOB(R),KNUCKLE---------- 2-K15
KNOB,AIR CON.---------- 3-H4
KNOB,CHANGE LEVER-------- 1-M6
2-J8
KNOB,FAN SWITCH---------- 3-E4
3-H4
KNOB,VOLUME---------- 3-H7
KNUCKLE(L),REAR---------- 2-E3
KNUCKLE(L),RECLINING----- 2-C16
KNUCKLE(L),STEERING------ 2-E5
KNUCKLE(R),REAR---------- 2-E3
KNUCKLE(R),RECLINING----- 2-L15
KNUCKLE(R),STEERING------ 2-E5

****
* *
* L *
* *
****

LABEL,ANTI THEFT-AUDIO--- 3-C10
LABEL,BATTERY---------- 3-D10
LABEL,BILSTEIN---------- 3-C10
LABEL,CAUTION---------- 3-C10
LABEL,CAUTION-FUSE COVER- 3-L7
LABEL,CAUTION-RADIATOR--- 3-C10
LABEL,CAUTION-RETRACTABLE 3-C10
LABEL,CHANGE---------- 2-L14
LABEL,EMISSION---------- 3-D10
LABEL,FUEL ECONOMY------- 3-D10
LABEL,FUEL WARNING------- 3-C10
LABEL,TEMPORARY TIRE----- 3-D10
LABEL,TIRE---------- 3-C10
LABEL,UNLEADED FUEL------ 3-C10
LABEL,VAC.DIAPHRAGM------ 3-D10
LABEL,VEHICLE INFORMATION 3-C10
LABEL'C',CAUTION-A/B----- 3-C10
LAMP SET(L),FRT COMB----- 2-C11
LAMP SET(L),HEAD--------- 2-K10
LAMP SET(L),RR.COMB.----- 2-F11
LAMP SET(L),SIDE TURN---- 2-C11
LAMP SET(L),SIDE TURN-RR- 2-G11
LAMP SET(R),FRT COMB----- 2-C11
LAMP SET(R),HEAD--------- 2-K10
LAMP SET(R),RR.COMB.----- 2-F11
LAMP SET(R),SIDE TURN---- 2-C11
LAMP SET(R),SIDE TURN-RR- 2-G11
LAMP,INTERIOR---------- 2-J11
LAMP,LICENSE---------- 2-I11
LAMP,STOP-HI.MOUNT------- 2-G11
LENS & BODY(L)---------- 2-C11
LENS & BODY(L),RR COMB.-- 2-F11
LENS & BODY(L),RR SIDE TU 2-G11
LENS & BODY(R)---------- 2-C11
LENS & BODY(R),RR COMB.-- 2-F11
LENS & BODY(R),RR SIDE TU 2-G11
LENS & HOUSING(L)-------- 2-C11
LENS & HOUSING(R)-------- 2-C11
LENS(L),RR.COMB.--------- 2-G11
LENS(R),RR.COMB.--------- 2-F11
LENS,ROOM LAMP---------- 2-J11
LENS,STOP LAMP-HI.MOUNT-- 2-H11
LEVER---------- 1-F7
1-H7
LEVER(L),OPERATING------- 2-G3
LEVER(R),OPERATING------- 2-G3
LEVER,ACCELERATOR-------- 2-G6
LEVER,CHANGE---------- 1-M6
LEVER,PARKING BRAKE------ 2-F8
LEVER,SELECT---------- 1-N9
2-J8
LEVER,WIPER-COMB. SWITCH- 3-M6
LID(L),LAMP---------- 2-M10
LID(R),LAMP---------- 2-L10
LID,ASHTRAY---------- 2-D14
LID,CONSOLE---------- 2-N14
LID,FUEL FILLER---------- 2-K6
LID,GLOVE BOX-OUTER------ 2-J14
LID,TRUNK---------- 2-C12
LIGHT,PLATE-ASHTRAY------ 2-D14
LINK SET,MODE---------- 3-D4
LINK SET,TEMP---------- 3-D4
LINK,CONTROL-STAB-------- 2-E4
2-J5
LINK,RECYCLE & FRESH----- 3-F4
LINK,SOFT TOP---------- 3-F5
LINK,WIPER---------- 3-C9
LOCK(L),DOOR---------- 3-C3
LOCK(L),TOP---------- 3-M5
LOCK(R),DOOR---------- 3-C3
LOCK(R),TOP---------- 3-L5
LOCK,BONNET---------- 2-M11
LOCK,CONSOLE-REAR-------- 2-N14
LOCK,DETACHABLE TOP------ 3-G5

LOCK,GLOVE LID---------- 2-J14
LOCK,LID---------- 2-C12
LOUVER,VENTILATOR-------- 2-D15

****
* *
* M *
* *
****

MAGNET---------- 1-N7
MANIFOLD,EXHAUST--------- 1-D4
MANIFOLD,INLET---------- 1-C4
MAT,FLOOR---------- 3-I9
MAT,REAR END---------- 3-I9
MAT,TRUNK ROOM---------- 3-I9
MEMBER NO.2(L),CROSS-FLOO 2-D13
MEMBER NO.2(R),CROSS-FLOO 2-C13
MEMBER NO.3,CROSS-------- 2-D13
MEMBER NO.4,CROSS-------- 2-D13
MEMBER(R),INST. PANEL---- 2-I14
MEMBER,CRASH PAD--------- 2-I14
MEMBER,CROSS---------- 2-D12
2-G4
2-J5
MEMBER,REAR DECK--------- 2-K12
METAL SET,CONN.ROD------- 1-K3
METAL SET,MAIN BRG.------ 1-K3
METAL SET,THRUST--------- 1-L3
METER SET---------- 2-G14
METER,FUEL---------- 2-H14
METER,OIL PRESSURE------- 2-G14
METER,TEMP---------- 2-H14
MIRROR(L),DOOR---------- 3-L9
3-M9
MIRROR(R),DOOR---------- 3-L9
MIRROR,INTERIOR---------- 3-M9
MODULE,AIR BAG---------- 2-H4
2-I16
MODULE,AIR BAG PASSENGER- 2-I16
MODULE,POWERTRAIN CONTROL 3-H6
3-I6
MODULE,PWT.CON".-A/T----- 3-I6
MOTOR(L),RETRACTABLE HEAD 2-L10
MOTOR(L),WINDOW---------- 3-E3
MOTOR(R),RETRACTABLE HEAD 2-L10
MOTOR(R),WINDOW---------- 3-E3
MOTOR,FAN-BLOWER UNIT---- 3-F4
MOTOR,WIPER---------- 3-C9
MOULD(UP),FRT.WINDOW----- 2-J10
MOULD,BELTLINE-REAR------ 3-J5
MOULD,RR.WINDOW---------- 3-C6
3-D5

****
* *
* N *
* *
****

NIPPLE,VANE PUMP--------- 2-N4
NOZZLE(L),DEFROSTER------ 2-D15
NOZZLE(R),DEFROSTER------ 2-D15
NOZZLE,WASHER-F.WIND----- 3-J8
3-M8
NUT---------- 1-C8
1-K7
1-K8
2-C3
2-C6
2-D6
2-E3
2-E5
2-F4
2-G4
2-G5
2-I5
2-I16
2-J5
NUT SET---------- 1-E7
NUT,CLIP---------- 2-E12
2-G10
2-H13
2-I10

NUT,CONNECTING ROD------- 1-J3
NUT,COOLING FAN---------- 1-C5
NUT,DECK LOCK---------- 3-M5
NUT,FLANGE---------- 2-D4
2-G5
NUT,FLANGE-CAP---------- 2-N6
3-I9
NUT,HUB---------- 2-K5
NUT,LOCK---------- 2-H3
2-K4
2-L3
NUT,LOCK-CLUTCH HUB------ 1-J6
NUT,LOCK-COUNTER SHAFT BR 1-I6
NUT,LOCK-RACK---------- 2-L4
NUT,MOUNTING-ANTENNA----- 3-J7
NUT,SELF LOCK---------- 3-D6
NUT,SIDE PROTECTOR------- 2-C11
2-F11
NUT,SPRING---------- 2-I14
NUT,STOPPER-LAMP HINGE--- 2-L10
NUT,TOP-CRASH PAD-------- 2-L14
NUT,WIPER LINK---------- 3-L8

****
* *
* O *
* *
****

OIL,COMPRESSOR---------- 3-M4
OPENER,FILLER LID-------- 2-K6
OPENER,T/LID & F/LID----- 2-K6
ORNAMENT,FRONT---------- 2-G10
2-K11
ORNAMENT,MAKER NAME-REAR- 2-K11
2-L11
ORNAMENT,REAR---------- 2-K11
2-L11
ORNAMENT,STEREO---------- 3-G7
OUTLET---------- 3-K6
OUTLET,WATER---------- 1-D5

****
* *
* P *
* *
****

PACK,SILENT---------- 2-N14
PAD---------- 2-J6
3-D6
3-E6
PAD SET,FRT CALIPER------ 2-F5
PAD SET,RR CALIPER------- 2-F3
PAD SUB SET,FRT CALIPER-- 2-F5
PAD SUB SET,RR CALIPER--- 2-G3
PAD,CHANGE BOOT---------- 2-C15
PAD,CRASH---------- 2-I14
PAD,FUEL TANK---------- 2-I6
2-J6
PAD,PEDAL---------- 2-C7
2-L6
PAD,RR FENDER---------- 3-I9
PAN(L),FLOOR---------- 2-E13
PAN(R),FLOOR---------- 2-D13
PAN,FLOOR-CENTER--------- 2-C13
PAN,FLOOR-FRONT---------- 2-C13
PAN,FLOOR-REAR---------- 2-C13
PAN,OIL---------- 1-E8
1-H3
PANEL(L),APRON & FRAME--- 2-F12
PANEL(L),COWL SIDE------- 2-L12
PANEL(L),FENDER-FRT.----- 2-E12
PANEL(L),FENDER-REAR----- 2-N12
PANEL(L),FLOOR SIDE------ 2-E13
PANEL(L),INSIDE---------- 2-L12
PANEL(L),OUT.-FRT DOOR--- 2-J16
PANEL(L),QUARTER--------- 2-L12
PANEL(L),RR FENDER-LOWER- 2-M12
PANEL(L),WHEEL APRON----- 2-E12
PANEL(R),APRON & FRAME--- 2-E12
PANEL(R),COWL SIDE------- 2-I12
PANEL(R),FENDER-FRT.----- 2-E12
PANEL(R),FENDER-REAR----- 2-N12

PANEL(R),FLOOR SIDE------ 2-E13
PANEL(R),INSIDE---------- 2-J12
PANEL(R),OUT.-FRT DOOR--- 2-J16
PANEL(R),QUARTER--------- 2-J12
PANEL(R),WHEEL APRON----- 2-E12
PANEL,BULK HEAD---------- 2-I12
PANEL,CENTER---------- 2-C14
PANEL,CENTER-LOWER------ 2-D14
PANEL,COWL-FRONT--------- 2-H12
PANEL,DASH-LOWER--------- 2-H12
PANEL,DASH-UPPER--------- 2-H12
PANEL,PLATE-MODE CONTROL- 3-E4
PANEL,RAD.SHROUD--------- 2-D12
PANEL,REAR DECK---------- 2-K12
PANEL,REAR END---------- 2-L12
PANEL,ROOF---------- 3-K5
PARTS KIT,INN.-BRAKE----- 2-F7
2-H7
PARTS KIT,INNER---------- 2-E6
PARTS SET---------- 3-E5
PARTS SET,ST. WHEEL------ 2-H4
PASS,OIL---------- 1-D6
PAWL,PARKING---------- 1-N9
PEDAL & ARM---------- 2-G6
PEDAL,BRAKE---------- 2-C7
2-M6
PEDAL,CLUTCH---------- 2-L6
PIECE,DISTANCE---------- 2-I3
2-M3
PILLAR(L),FRONT-OUT.----- 2-N12
PILLAR(L),FRT.-INNER----- 2-M12
PILLAR(L),HINGE---------- 2-M12
PILLAR(L),HINGE-OUT.----- 2-N12
PILLAR(R),FRONT-OUT.----- 2-N12
PILLAR(R),FRT.-INNER----- 2-J12
PILLAR(R),HINGE---------- 2-J12
PILLAR(R),HINGE-OUT.----- 2-N12
PIN---------- 2-J3
2-M6
PIN,CHECKER---------- 3-C3
PIN,DECK LOCK---------- 3-M5
PIN,GUIDE---------- 2-G3
PIN,INTER LOCK---------- 1-K6
PIN,PIVOT-CLUTCH REL.FORK 1-C6
PIN,SET-CAMSHAFT--------- 1-M3
PIN,SLIDER---------- 2-F5
PIN,SNAP---------- 2-D7
2-J8
2-M6
PIN,SPRING-PARKING ROD--- 1-C10
PIN,STOPPER-RR CALIPER--- 2-F3
PIN,TUBULAR---------- 1-G3
1-H3
2-I3
2-M3
PINION---------- 1-H7
PINION,DIFFERENTIAL------ 2-I3
PINION,STEERING GEAR----- 2-J4
PIPE NO.2,COOLER--------- 3-H4
PIPE NO.3,MAIN BRAKE----- 2-M7
PIPE NO.4,COOLER--------- 3-H4
PIPE NO.5,COOLER--------- 3-H4
PIPE(L),BRAKE-FRONT------ 2-J7
2-M7
PIPE(R),BRAKE-FRONT------ 2-J7
2-M7
PIPE,AIR INTAKE---------- 1-H4
PIPE,AUTO CRUISE CONTROL- 3-E7
PIPE,BRAKE---------- 2-I7
2-L7
PIPE,BRAKE-FRT---------- 2-M7
PIPE,BRAKE-REAR---------- 2-I7
2-J7
2-L7
2-M7
PIPE,BYPASS---------- 1-E5
PIPE,CLUTCH---------- 2-F6
PIPE,COOLING UNIT-------- 3-C5
PIPE,DRAIN-ANTENNA------- 3-J7
PIPE,DRAIN-RR FENDER----- 2-I12
PIPE,E.G.R.---------- 1-K4
PIPE,EVAPORATION--------- 2-H8
PIPE,EXHAUST-FRONT------- 2-D6
PIPE,FILLER---------- 2-H6

PIPE,FILLER-F.WASHER TANK 3-L8
PIPE,FUEL-MAIN---------- 2-H8
PIPE,FUEL-RETURN--------- 2-H8
PIPE,HEATER UNIT--------- 3-D4
PIPE,OIL---------- 1-L7
PIPE,OIL LEVEL GAUGE----- 1-G3
PIPE,PEDAL---------- 2-C7
2-M6
PIPE,PRESSURE---------- 2-M4
PIPE,RETURN---------- 2-M4
PIPE,SCREEN WASHER------- 3-M8
PIPE,SUCTION---------- 2-N4
PIPE,VACUUM---------- 1-L7
2-E7
2-G7
PIPE,VINYL---------- 3-K8
3-M8
PIPE,WATER---------- 1-D5
PIPE,WATER BY PASS------- 1-F3
PISTON SET---------- 1-K3
1-L3
PISTON,ACCUM---------- 1-K8
PISTON,ACCUMULATOR------- 1-F8
PISTON,BAND SERVO-------- 1-C8
PISTON,CLUTCH---------- 1-D9
PISTON,FLOATING---------- 2-F7
2-H7
PISTON,LOW & REVERSE----- 1-L9
PISTON,N/D ACCUM--------- 1-K8
PISTON,PRIMARY---------- 2-F7
2-H7
PISTON,1/2 ACCUM--------- 1-L8
PLATE---------- 2-D7
PLATE NO.1,SEAL---------- 3-I4
PLATE NO.2(L),SET-F.BUMPE 2-F10
PLATE NO.2(R),SET-F.BUMPE 2-F10
PLATE NO.2,SEAL---------- 3-J4
PLATE NO.3,SEAL---------- 3-J4
PLATE SET---------- 2-H10
2-I10
PLATE(C),SET-TOP FABRIC-- 3-I5
PLATE(FRT),SET-ROOF PANEL 3-G5
PLATE(L),CLOSING-QTR PANE 2-N12
PLATE(L),FRONT SCUFF----- 3-G9
PLATE(L),HOOK-REAR DECK-- 3-H5
PLATE(L),SEAL---------- 2-L12
PLATE(L),SET-TOP FABRIC-- 3-J5
PLATE(L),SIDE-REAR FLOOR- 2-D13
PLATE(R),CLOSING-QTR PANE 2-L12
PLATE(R),END---------- 2-J12
PLATE(R),FRONT SCUFF----- 3-G9
PLATE(R),HOOK-REAR DECK-- 3-H5
PLATE(R),SEAL---------- 2-J12
PLATE(R),SET-TOP FABRIC-- 3-J5
PLATE(R),SIDE-REAR FLOOR- 2-C13
PLATE,ASHTRAY---------- 2-D14
PLATE,BACK-BOOTS RING---- 2-L14
PLATE,BACKING---------- 1-K7
3-C9
PLATE,BAFFLE---------- 1-E3
PLATE,BAFFLE-DIFF CASING- 2-C4
2-K3
PLATE,CAM-SUB FRAME------ 2-F4
2-G5
PLATE,CAUTION---------- 3-D10
PLATE,CLAMP---------- 2-K4
2-M4
PLATE,CLAMP-JACK--------- 2-M5
PLATE,CRANKSHAFT PULLEY-- 1-J3
PLATE,CUSHION-D. TOP----- 3-L5
PLATE,DECK LOCK---------- 3-M5
PLATE,DISC---------- 2-E3
2-E5
PLATE,DISHED---------- 1-D9
PLATE,DRIVE---------- 1-K7
1-L9
PLATE,DRIVEN---------- 1-D9
1-E9
1-L9
PLATE,EARTH-MOTOR ANTENNA 3-J7
PLATE,END---------- 1-I3
PLATE,HOLDER-BRUSH------- 3-E9
PLATE,LOCK---------- 2-J3
2-M3

PLATE,MANUAL---------- 1-N9
PLATE,NUT---------- 2-M12
PLATE,NUT-TRUNK FLOOR PAN 2-C13
PLATE,OIL BAFFLE--------- 1-E3
PLATE,OIL BAFFLE-CYL. BLK 1-H3
PLATE,OIL BAFFLE-EX.----- 1-E3
PLATE,OIL BAFFLE-IN.SIDE- 1-E3
PLATE,PRINT---------- 2-G14
PLATE,RETAINING---------- 1-D8
1-E9
1-I9
1-L9
1-N9
PLATE,SEAL-T.BELT COVER U 1-I3
PLATE,SEPARATOR---------- 1-J8
1-K8
PLATE,SET NO.1---------- 2-F10
PLATE,SIDE'A'---------- 1-J8
PLATE,SIDE'B'---------- 1-J8
PLATE,SIDE'D'---------- 1-I8
PLATE,STABILIZER--------- 2-J5
PLATE,STABILIZER-RR------ 2-E4
PLATE,WINDOW---------- 2-G14
PLATE'E',SIDE---------- 1-L8
PLATE'F',SIDE---------- 1-L8
PLUG---------- 1-G3
2-F13
PLUG,ACCUMULATOR--------- 1-F8
PLUG,BLIND---------- 1-G3
PLUG,COMPRESSOR---------- 3-M4
PLUG,DRAIN---------- 1-H3
2-C12
2-F13
2-H6
3-C3
PLUG,HOLE---------- 2-G13
2-H16
PLUG,MAGNET---------- 1-D6
2-H3
2-L3
PLUG,PINION---------- 2-J4
2-L4
PLUG,REGULATOR---------- 1-I8
PLUG,SCREW---------- 2-F3
PLUG,SPARK---------- 1-N6
PLUG,SQUARE HEAD--------- 1-N7
PLUG,STOPPER---------- 1-K8
PLUNGER,CONTROL---------- 1-M4
POLE,ANTENNA---------- 3-J7
PRESSURE RG.,FUEL-------- 1-G4
PROTECTOR---------- 1-K4
1-K8
PROTECTOR(C),EDGE-D.TOP-- 3-N5
PROTECTOR(L),'A'--------- 2-G11
PROTECTOR(L),EDGE-D.TOP-- 3-C6
PROTECTOR(L),RETRA. FRONT 2-L10
PROTECTOR(L),RETRA. H/L-- 2-L10
PROTECTOR(L),RETRA. SIDE- 2-L10
PROTECTOR(L),SPLASH------ 2-L12
PROTECTOR(R),'A'--------- 2-F11
PROTECTOR(R),EDGE-D.TOP-- 3-N5
PROTECTOR(R),RETRA H/L--- 2-L10
PROTECTOR(R),RR FENDER--- 2-H13
PROTECTOR(R),SPLASH------ 2-J12
PROTECTOR,CABLE---------- 3-J8
3-L8
PROTECTOR,COWL GRILLE---- 2-J10
PROTECTOR,HARNESS-------- 3-H8
PROTECTOR,HT.CORD-S.TANK- 1-E3
PROTECTOR,NO. PLATE------ 2-F10
PROTECTOR'A'(L),LINK----- 3-F5
PROTECTOR'A'(R),LINK- --- 3-F5
PROTECTOR'A',FILLER PIPE- 2-I6
PROTECTOR'B'(L),LINK----- 3-F5
PROTECTOR'B'(R),LINK----- 3-F5
PROTR(L),MOULD-BELT LINE- 3-J5
PROTR(L),SEAT BELT------- 2-K15
PROTR(R),MOULD-BELT LINE- 3-J5
PROTR(R),SEAT BELT------- 2-K15
PROTR,MOULD-FRT WINDOW--- 2-J10
PULLEY---------- 1-E7
PULLEY,CAMSHAFT---------- 1-N3
PULLEY,CRANKSHAFT-------- 1-J3
PULLEY,IDLE---------- 1-F5

PULLEY,MAGNET CLUTCH----- 3-N4
PULLEY,TIMING BELT------- 1-J3
PULLEY,WATER PUMP-------- 1-C5
PUMP SET,WATER---------- 1-C5
PUMP,FUEL---------------- 2-H6
PUMP,FUEL-SUB----------- 2-H6
PUMP,OIL----------------- 1-L7
1-M4
PUMP,VANE---------------- 2-N4
PUMP,WASHER-------------- 3-K8
3-M8

****
* *
* R *
* *
****

RACE,BRG.HUB CLUTCH------ 1-I9
RACE,BRG.PUMP COVER------ 1-G9
RACE,INNER--------------- 1-G6
1-K9
RACE,OUTER--------------- 1-K9
RACE,OUTER-ONE WAY CLUTCH 1-I9
RACE,SIDE-ONE WAY CLUTCH- 1-H9
RACK,STEERING GEAR------- 2-J4
2-L4
RADIATOR----------------- 1-D5
RAIL(L),RAIN-REAR-------- 2-N12
RAIL(R),RAIN-REAR-------- 2-K12
RAIL,RAIN-SOFT TOP REAR-- 3-I5
RECTIFIER---------------- 1-D7
REGULATOR(L),WINDOW------ 3-D3
REGULATOR(R),WINDOW------ 3-D3
REGULATOR,VOLTAGE-------- 1-D7
REINF.(L),BELT LINE-C.PIL 2-K12
REINF.(L),FLOOR---------- 2-I13
REINF.(L),SIDE SILL------ 2-M12
REINF.(L),STRIKER-------- 2-M12
REINF.(L),TIE DOWN HOOK-- 2-F12
REINF.(L),WHEEL APRON---- 2-F12
REINF.(R),BELT LINE-C.PIL 2-K12
REINF.(R),SIDE SILL------ 2-K12
REINF.(R),STRIKER-------- 2-K12
REINF.(R),TIE DOWN HOOK-- 2-F12
REINF.(R),WHEEL APRON---- 2-F12
REINF.,FUEL TANK--------- 2-I6
REINFORCEMENT(R)--------- 2-E12
REINFORCEMENT,BUMPER----- 2-F10
2-H10
RELAY-------------------- 2-E8
RELAY,ANTENNA------------ 3-J7
RELAY,CONTROL------------ 3-H6
RELAY,FUEL PUMP---------- 3-H6
RELAY,MOTOR-HYD. UNIT---- 2-D8
RELAY,N.O.--------------- 3-J6
3-N6
RELAY,RETRACTOR-COWL PANE 3-N6
RELAY,TRANSFER----------- 3-J4
RELAY,VALVE-HYD. UNIT---- 2-D8
RESISTOR,BLOWER UNIT----- 3-F4
RESISTOR,INTERLOCK------- 3-N6
RESISTOR,PANEL LIGHT----- 2-C14
REST(L),ARM-------------- 3-J3
REST(R),ARM-------------- 3-J3
REST,FOOT---------------- 2-C7
2-M6
RETAINER----------------- 1-D8
1-N9
RETAINER(L),FRONT BUMPER- 2-E10
RETAINER(L),WTHSTP-D.TOP- 3-N5
RETAINER(R),FRONT BUMPER- 2-E10
RETAINER(R),WTHSTP-D.TOP- 3-N5
RETAINER,FASCIA---------- 2-E10
RETAINER,LOCK CYL.------- 3-D3
RETAINER,R.BUMPER-------- 2-H10
RETAINER,SERVO----------- 1-C8
1-G8
RETAINER,SPRING---------- 1-D9
RETAINER'A'(L),WTHSTP---- 3-H5
RETAINER'A'(R),WTHSTP---- 3-H5
RETAINER'B'(L),WTHSTP---- 3-H5
RETAINER'B'(R),WTHSTP---- 3-H5
RETAINER'C'(L),WTHSTP---- 3-H5
RETAINER'C'(R),WTHSTP---- 3-H5
RING--------------------- 1-M9
RING SET,PISTON---------- 1-K3
RING(L)MOUNTING---------- 2-K10
RING(R)MOUNTING---------- 2-K10
RING,'O'----------------- 1-C8
1-D6
1-E8
1-F8
1-G3
1-G4
1-G8
1-J4
1-M4
1-M7
1-N7
1-N9
2-G7
3-G6
3-I6
RING,'O'-MASTER CYL.----- 2-F7
2-H7
RING,'O'-NO.3------------ 3-L4
RING,'O'-WATER BYPASS---- 1-E5
RING,'O'-WATER PUMP------ 1-C5
RING,BACK UP------------ 2-M4
RING,ILLUMINATION-------- 3-K6
RING,RETAINING----------- 1-F6
1-L6
2-E7
2-K10
RING,RETAINING-BALL BEARI 1-I6
RING,RETAINING-DISC PLATE 2-E3
RING,RETAINING-SHIFT ROD- 1-K6
RING,SEAL---------------- 1-M9
1-N7
RING,SNAP---------------- 1-D9
1-E9
1-F6
1-F9
1-G9
1-I9
1-K9
1-L9
1-N9
3-E3
3-N4
RING,SNAP-MAGNET CLUTCH-- 3-N4
RING,SNAP-RR CALIPER----- 2-G3
RING,SYNCHRONIZER-------- 1-G6
1-J6
RING,THRUST WASHER------- 1-J6
RIVET-------------------- 2-N10
RIVET,BLIND,VIN PLATE---- 3-C10
ROD,CONNECTING----------- 1-J3
ROD,CONTROL-------------- 1-L6
ROD,DIAPHRAGM------------ 1-D8
1-E8
ROD,PARKING-------------- 1-N9
ROD,PERFORMANCE---------- 2-H13
ROD,PUSH----------------- 2-E6
2-L6
ROD,PUSH-FRT CALIPER----- 2-G3
ROD,RELEASE-------------- 2-F8
ROD,RETRACTABLE---------- 2-L10
ROD,SELECTOR-REAR-------- 2-J8
ROD,SHIFT(1ST&2ND)------- 1-K6
ROD,SHIFT(3RD&4TH)------- 1-K6
ROD,SHIFT-OVER TOP & REVE 1-K6
ROLLER------------------- 2-G6
ROOF,DETACHABLE TOP------ 3-K5
3-L5
ROTOR-------------------- 1-E7
ROTOR,SENSOR-FRT A.B.S.-- 2-E3
2-E5
RUBBER(C),CUSHION-BONNET- 2-M11
RUBBER(LWR),MOUNT-TANK--- 2-J6
RUBBER(UP),MOUNT-TANK---- 2-J6
RUBBER,BLADE-FRONT------- 3-C9
RUBBER,CUSHION----------- 2-C12
RUBBER,CUSHION-BONNET FRT 2-M11
RUBBER,CUSHION-BONNET RR- 2-M11
RUBBER,DUST SEAL--------- 2-F13
RUBBER,ENGINE MT--------- 2-C6
RUBBER,INSULATOR--------- 3-I4
RUBBER,MOUNT------------- 1-D5
1-H4
RUBBER,MOUNTING---------- 1-H4
1-N6
2-D4
2-G5
2-J4
2-L4
3-G6
RUBBER,REAR-ET/ED COMBI.- 3-G7
RUBBER,SEAL-------------- 1-E5
1-E6
RUBBER,SEAL-SEAL PLATE--- 1-I3
RUBBER,STAB -FRT--------- 2-J5
RUBBER,STOP-------------- 2-C7
2-L6
RUBBER,STOPPER----------- 2-C7
2-L6
3-E3
RUBBER,SUB FRAME MTG----- 2-C4
2-K3
RUBBER,URETHNE----------- 2-I14

****
* *
* S *
* *
****

SCREEN(L),FRONT DOOR----- 3-F3
SCREEN(R),FRONT DOOR----- 3-F3
SCREW-------------------- 2-J8
2-K10
SCREW & WASHER SET------- 1-J4
SCREW SET---------------- 1-D7
1-E7
1-F7
1-H7
SCREW,ADJUST------------- 2-F8
2-J3
2-K10
2-M3
SCREW,ASHTRAY------------ 2-D14
SCREW,BLEEDER------------ 2-E6
2-F5
2-G3
SCREW,BRACKET-WIPER MOTOR 3-E9
SCREW,CHANGE LEVER KNOB-- 2-J8
SCREW,DOOR SWITCH-------- 3-D7
SCREW,EARTH SET-MOTOR BRK 3-E9
SCREW,GROMMET------------ 2-J10
SCREW,HEAD LAMP BEZEL---- 2-M10
SCREW,HOOK-REAR DECK----- 3-H5
SCREW,ID.ADJUST-TH. BODY- 1-J4
SCREW,KNUCKLE------------ 2-L15
2-M15
SCREW,MOTOR-ELECTRIC FAN- 1-C5
SCREW,OIL PUMP COVER----- 1-M4
SCREW,RR HEATER UNIT----- 3-E4
SCREW,SIDE GARNNISH------ 2-J10
SCREW,TAPPING------------ 2-E15
2-J14
SCREW,TAPPING-DOOR LOCK-- 3-C3
SCREW,TAPPING-MUD GUARD-- 2-H13
SCREW,TIE DOWN HOOK------ 2-I13
SCREW,TOP LOCK----------- 3-H5
SCREW,WEDGE-LIFT GATE---- 3-F3
SCREW,WINDOW REGULATOR--- 2-K16
3-D3
SEAL & BOOT SET,CAL.-FRT- 2-F5
SEAL & BOOT SET,CAL.-RR-- 2-F3
SEAL KIT----------------- 2-E6
SEAL KIT,ST. GEAR-------- 2-M4
SEAL KIT,VANE PUMP------- 2-N4
SEAL,'O'RING------------- 1-D8
1-D9
1-L9
SEAL,BUMPER-------------- 2-G10
SEAL,COOLING UNIT-------- 3-C5
SEAL,CUT RING------------ 1-L7
SEAL,DUST---------------- 2-I5
SEAL,DUST-BALL JOINT----- 2-G5
2-K4
SEAL,DUST-BALL JOINT----- 2-M4
SEAL,LATHE CUT----------- 1-C8
1-D9
SEAL,OIL----------------- 1-C6
1-D6
1-I3
1-L7
1-M4
1-N7
2-H3
2-I3
2-L3
2-M3
SEAL,OIL-AXLE------------ 2-E3
SEAL,OIL-CRANKSHAFT------ 1-I3
SEAL,PISTON-------------- 1-C8
1-L9
SEAL,RUBBER-------------- 1-F3
SEAL,RUBBER-FRONT BUMPER- 2-E10
SEAL,RUBBER-REAR BUMPER-- 2-H10
SEAL,SHAFT--------------- 2-J4
2-L4
SEAL,SHAFT-COMPR.-------- 3-M4
SEAL,VALVE--------------- 1-M3
SEAT(L),FRONT------------ 2-I15
2-J15
2-K15
SEAT(R),FRONT------------ 2-H15
2-I15
SEAT,REGULATOR SPRING---- 1-I8
SEAT,VALVE SPG.-LWR------ 1-M3
SEAT,VALVE SPG-UP-------- 1-M3
SENSOR(L),FRT-A.B.S.----- 2-E8
SENSOR(L),RR-A.B.S.------ 2-E8
SENSOR(R),FRT-A.B.S.----- 2-E8
SENSOR(R),RR-A.B.S.------ 2-E8
SENSOR,AIR FLOW---------- 1-H4
SENSOR,CRANKSHAFT POSI.-- 3-G6
SENSOR,M.A.P.------------ 3-G6
SENSOR,OIL TEMP---------- 3-I6
SENSOR,OXYGEN------------ 3-H6
SENSOR,RESERVE TANK------ 2-E7
2-G7
SENSOR,STEERING PRESSURE- 2-N4
SENSOR,TEMP.-ENG.COOLANT- 3-H6
SENSOR,THROTTLE-CARB.---- 1-J4
SET PIN,SPRING----------- 1-E5
SET PLATE NO.1(R),RR BUMP 2-G10
SET,TANK----------------- 2-E7
2-G7
SHADE,LAMP-LICENSE------- 2-I11
SHAFT-------------------- 1-I7
1-M9
SHAFT,CYL.-COMPRESSOR---- 3-M4
SHAFT,DIFF. PINION------- 2-I3
SHAFT,DRIVE-------------- 2-D3
SHAFT,DRIVE NO.1--------- 3-D9
SHAFT,DRIVE NO.2--------- 3-D9
SHAFT,ENGY.ABSORBER------ 2-I4
SHAFT,INPUT-------------- 1-L7
SHAFT,INTERMED.---------- 2-I4
SHAFT,INTERMEDIATE------- 1-I9
SHAFT,MAIN--------------- 1-F6
SHAFT,MANUAL------------- 1-N9
SHAFT,PARKING PAWL------- 1-N9
SHAFT,PINION------------ 1-H7
SHAFT,PROPELLER-RR------- 2-C3
SHAFT,PULLEY------------ 1-F5
SHAFT,REV. IDLE GEAR----- 1-I6
SHEET(L),DECK LOCK------- 3-N5
SHEET(R),DECK LOCK------- 3-M5
SHEET,RUBBER------------ 2-D4
2-G5
SHEET,SPRING------------ 1-L6
1-M4
SHELL,CONNECTING--------- 1-F9
SHIELD(L),SPLASH-R.BUMPER 2-H10
SHIELD(L),SPLASH-REAR---- 2-I13
SHIELD(R),SPLASH-R.BUMPER 2-H10
SHIELD(R),SPLASH-REAR---- 2-N13
2-I13
SHIELD,SPLASH------------ 2-H13
SHIM,ADJUST-------------- 1-H6
SHIM,ADJUST-COUNTER SHAFT 1-I6
SHIM,HINGE-DOOR---------- 2-J16
SILENCER----------------- 2-G16
SILENCER,FLOOR----------- 3-J9
SILENCER,MAIN------------ 2-D6
SILL(C),SIDE-INNER------- 2-I12
SILL(FRT.L),SIDE-INNER--- 2-I12
SILL(FRT.R),SIDE-INNER--- 2-I12
SILL(L),SIDE OUT--------- 2-M12
SILL(R),SIDE OUT--------- 2-K12
SILL(RR.L),SIDE-INNER---- 2-I12
SILL(RR.R),SIDE-INNER---- 2-I12
SLEEVE,BEARING-FRONT----- 1-F7
1-I7
SLEEVE,BEARING-REAR------ 1-F7
1-H7
SLEEVE,CLUTCH HUB-------- 1-F6
1-G6
SLEEVE,GEAR-------------- 1-H6
SLEEVE,REGULATOR PLUG---- 1-I8
SLEEVE,SEAL-O.D.CARRIER-- 1-H9
SLEEVE,SPEEDOMETER------- 1-D6
SLIDE'A',BUMPER---------- 2-F10
SLIDE'UP.',BUMPER-------- 2-H10
SOCKET------------------- 2-G14
SOCKET(L),RR SIDE TURN--- 2-G11
SOCKET(L),RR.COMB.------- 2-F11
SOCKET(R),RR SIDE TURN--- 2-G11
SOCKET(R),RR.COMB.------- 2-F11
SOCKET,F. COMB. LAMP----- 2-C11
SOCKET,LICENSE LAMP------ 2-I11
SOCKET,METER SET--------- 2-G14
SOCKET,SIDE TURN--------- 2-D11
SOCKET,STOP LAMP-HI.MOUNT 2-H11
SOLENOID----------------- 1-M8
SOLENOID,LOCK UP CONTROL- 3-I6
SPACE-------------------- 2-H3
2-I3
2-L3
2-M3
SPACER------------------- 1-H4
1-H6
1-N6
2-D8
2-F8
2-J3
2-K3
2-L6
2-M3
2-M6
2-N3
SPACER,AIR INT.PIPE------ [illegible]
SPACER,DOWEL------------ [illegible]10
SPACER,E.A.FOAM---------- [illegible]10
SPACER,PLANT FRAME------- 2-C6
SPACER,STRAP------------ 1-F5
1-N6
SPACER,WINDOW------------ 3-D5
SPEAKER,LOUD-DOOR-------- 3-K7
SPEAKER,LOUD-FRONT------- 3-G3
3-K7
SPEAKER,PILLOW-SEAT------ 2-K15
SPEEDOMETER-------------- 2-H14
SPINDLE,ADJUSTER--------- 2-F3
SPINDLE,SELECT LOCK------ 1-L6
SPRING------------------ 1-J8
1-K8
1-M6
2-D15
2-E6
2-K10
SPRING LIFT,LID---------- 2-K6
SPRING(L),BALANCE-------- 2-C12
SPRING(L),LEVER---------- 2-F3
SPRING(R),BALANCE-------- 2-C12
SPRING(R),LEVER---------- 2-F3
SPRING,ACCUM N-R--------- 1-K8
SPRING,ACCUM 1-2--------- 1-L8
SPRING,ASHTRAY----------- 2-D14
SPRING,BACK UP----------- 1-M8
SPRING,BALL PARK--------- 1-D8
1-N9
SPRING,BRUSH------------ 1-G7
SPRING,BY-PASS----------- 1-L8
SPRING,CANCEL CAM-------- 3-M6

SPRING,CLOCK---------- 3-M6
SPRING,COIL-FRONT-------- 2-G5
SPRING,COIL-REAR--------- 2-D4
SPRING,CUSHION-PSTN.STEM- 1-N7
SPRING,METER HOOD-------- 2-C14
2-E14
SPRING,MODIFIER---------- 1-J8
SPRING,N/D ACCUM--------- 1-K8
SPRING,PARKING REVER----- 2-F8
SPRING,PAWL RETURN------- 1-C10
SPRING,PISTON---------- 1-L9
SPRING,PISTON RETURN----- 1-D9
1-N7
SPRING,PRESSURE---------- 1-M4
SPRING,REDUCING---------- 1-K8
SPRING,REGULATOR--------- 1-I8
SPRING,RETURN---------- 2-F8
2-G6
2-L6
SPRING,RETURN-BRAKE------ 2-C7
2-M6
SPRING,SHIFT ROD END----- 1-K6
SPRING,SHIFT ROD-REVERSE- 1-K6
SPRING,SYNCHRO. KEY------ 1-G6
SPRING,SYNCHRO KEY------- 1-J6
SPRING,SYNCHRONIZER------ 1-G6
SPRING,TENSIONER--------- 1-N3
SPRING,THROTTLE BACK-UP-- 1-J8
SPRING,VALVE------------- 1-M3
SPRING,1-2 SHIFT--------- 1-I8
SPRING,2-3 SHIFT--------- 1-I8
SPRING,3-2 TIMING-------- 1-M8
1-N8
SPRING,3-4 SHIFT--------- 1-M8
STABILIZER,FRONT--------- 2-J5
STABILIZER,RR---------- 2-E4
STARTER---------- 1-F7
1-H7
STATOR---------- 1-D7
STAY(L),RR. BUMPER--- --- 2-H10
STAY(R),RR. BUMPER------- 2-H10
STAY,BONNET---------- 2-M11
STAY,LOCK-BONNET--------- 2-D12
STAY,MANIFOLD---------- 1-C4
STEM,PISTON---------- 1-C8
STEM,PISTON BAND--------- 1-F8
STOPPER---------- 2-G7
STOPPER SET---------- 1-F7
1-H7
STOPPER,BUMP---------- 2-D4
2-G5
STOPPER,CONSOLE LID------ 2-N14
STOPPER,FILLER LID------- 2-K6
STOPPER,GLASS---------- 2-L16
STOPPER,LINK-HOOD-------- 3-F5
STOPPER,SOFT TOP--------- 3-C6
STOPPER,ZIPPER-BACK WINDO 3-G5
STRAINER,INNER---------- 1-M8
STRAINER,OIL---------- 1-K8
1-L8
1-M4
STRAP,ALTERNATOR--- ----- 1-N6
STRIKER---------- 2-J14
3-E3
STRIKER(L),LOCK-TOP------ 3-N5
STRIKER(R),LOCK-TOP------ 3-N5
STRIKER,LID---------- 2-C12
STRUT,BAND---------- 1-N7
STUD---------- 1-D4
1-E3
STUD,EX MANIFOLD--------- 1-E3
SUN VISOR(L)---------- 3-M9
SUN VISOR(R)---------- 3-M9
SUPPORT(L),MOUNTING------ 2-F3
2-F5
SUPPORT(R),MOUNTING------ 2-F3
2-F5
SUPPORT,CENTER---- ----- 1-I9
SUPPORT,DRUM------ ----- 1-F8
SUPPORT,OIL PIPE---- --- 1-M7
SUPPORTER,ACTUATOR------- 1-D8
1-N9
SUPPORTER,FORK-- -------- 1-C6
SW.,PRESSURE-LIQUID TANK- 3-I4

SWITCH---------- 1-G7
1-I7
3-G6
SWITCH(R),CLUSTER-------- 3-K6
SWITCH,BACK UP LAMP------ 3-G6
SWITCH,CLUTCH---------- 2-L6
SWITCH,CLUTCH CUT-------- 2-N6
SWITCH,COMBINATION------- 3-M6
SWITCH,DIMMER---------- 3-M6
SWITCH,DOOR---------- 3-D7
SWITCH,FAN-HEATER CONTROL 3-E4
SWITCH,IGNITION---------- 2-C10
SWITCH,INHIBITOR--------- 1-H9
3-I6
SWITCH,LEVEL-WASHER TANK- 3-L8
SWITCH,LIGHT & TURN------ 3-M6
SWITCH,MAIN---------- 3-K6
SWITCH,OIL PRESSURE------ 3-G6
SWITCH,OVER DRIVE CONTROL 2-J6
SWITCH,PARKING LAMP------ 2-G8
SWITCH,POWER WINDOW------ 2-C15
SWITCH,RMT.MIRROR-------- 3-K6
SWITCH,RR.DEF.---------- 3-K6
SWITCH,STOP-LAMP--------- 2-D7
2-N6

****
* *
* T *
* *
****

T/MISSION CPT.---------- 1-K7
TACHOMETER---------- 2-H14
TANK,FUEL---------- 2-H6
TANK,LIQUID---------- 3-I4
TANK SUB-RADIATOR-------- 1-E5
TANK,VANE PUMP---------- 2-C5
TANK,WASHER---------- 3-J8
3-K8
3-M8
TANK,WASHER-FRONT-------- 3-J8
3-L8
TAPE,SEAL-RAIN RAIL- ---- 3-G5
TENSIONER,TIMING BELT---- 1-N3
TERMINAL SET---------- 1-E7
THERMOSTAT SET---------- 1-D5
THERMOSTAT,COOLING UNIT-- 3-C5
TIMER & BUZZER---------- 3-N6
TIRE---------- 2-K5
TOOL SET---------- 3-K9
TRAY,ASH---------- 2-D14
TRAY,BATTERY---------- 1-J7
TRAY,REAR PACKAGE-------- 3-G9
TRIM(L),'A'PILLAR-------- 3-F9
TRIM(L),DOOR---------- 3-I3
TRIM(L),FRONT SIDE------- 3-G9
TRIM(L),QUARTER---------- 3-E10
TRIM(L),SEAT BACK-------- 2-F16
2-G16
TRIM(L),SEAT CUSHION----- 2-D16
TRIM(L),TRUNK SIDE------- 3-G9
TRIM(R),'A'PILLAR-------- 3-F9
TRIM(R),DOOR---------- 3-H3
TRIM(R),FRONT SIDE------- 3-G9
TRIM(R),QUARTER---------- 3-E10
TRIM(R),SEAT BACK-------- 2-C16
2-N15
TRIM(R),SEAT CUSHION----- 2-M15
TRIM,FRONT HEADER-------- 3-F9
TRIM,TRUNK END---------- 3-H9
TUBE,FILLER---------- 1-E8
TUBE,HEAD LAMP---------- 2-C11
TUBE,OIL FILTER-UPPER---- 1-E8
TUBE,SILICON---------- 1-I3
1-N4
TUBE,VACUUM---------- 1-E4
1-J7
1-K4
1-L4

****
* *
* U *
* *
****

UNIT,CENTRAL PROCESSING-- 3-N6
UNIT,COOLING---------- 3-C5
UNIT,FLASHER---------- 3-N6
UNIT,HEAD LAMP---------- 2-K10
UNIT,HEAT GAUGE---------- 3-G6
UNIT,HYDRAULIC-ABS------- 2-D8
UNIT,SAS---------- 2-I16
UNIT,WIPER-COMB. SWITCH-- 3-M6

****
* *
* V *
* *
****

VACUUM POWER ASSIST------ 2-E7
2-G7
VALVE,AIR---------- 2-K5
VALVE,CHECK---------- 2-I6
3-J8
VALVE,CONTROL---------- 1-I8
VALVE,CONTROL BACK UP---- 1-M8
VALVE,E.G.R.---------- 1-K4
VALVE,EXHAUST---------- - 1-M3
VALVE,EXPANSION---------- 3-C5
VALVE,FUEL VAPOR--------- 2-I6
VALVE,IDLE AIR CONTROL--- 1-J4
VALVE,INLET---------- 1-M3
VALVE,MANUAL-- ---------- 1-I8
VALVE,MODIFIER---------- 1-I8
VALVE,NON RETURN--------- 2-I6
VALVE,OIL JET---------- 1-G3
VALVE,ONE WAY---------- 1-F8
1-M8
VALVE,ORIFICE CHECK------ 1-J8
VALVE,P.B.---------- 2-I7
2-L7
VALVE,P.C.V.---------- 1-F3
VALVE,REDUCING---------- 1-K8
VALVE,REGULATOR---------- 1-I8
VALVE,RELIEF---------- 3-M4
VALVE,SHIFT 3-4---------- 1-M8
VALVE,SOLENOID---------- 1-K4
1-L8
3-G6
VALVE,ST. GEAR---------- 2-M4
VALVE,THREE WAY---------- 3-H6
VALVE,THROTTLE---------- 1-J8
VALVE,THROTTLE BACK-UP--- 1-J8
VALVE,1-2 REDUCING------- 1-K8
VALVE,1-2 SHIFT---------- 1-I8
VALVE,2-3 SHIFT---------- 1-I8
VALVE,3-4 SHIFT-COAST---- 1-M8

****
* *
* W *
* *
****

WASHER---------- 1-H9
2-G5
2-H3
2-I3
2-K4
2-L3
2-L4
2-L10
2-M4
3-E9
3-N4
WASHER SET---------- 1-F7
WASHER,DISHED---------- 1-M8
WASHER,FASTENER-RAIN RAIL 3-G5
WASHER,FRONT CLUTCH------ 1-G9
1-H9
WASHER,HOOK'A'---------- 3-C6

WASHER,HOOK'A'&'B'------- 3-C6
WASHER,HYD. UNIT--------- 2-E8
WASHER,LID OPENER-------- 2-K6
WASHER,LOCK-PUMP FILTER-- 2-H6
WASHER,MOUNT.-FAN-------- 1-C5
WASHER,PARKING LEVER----- 2-G6
WASHER,PLAIN---------- 1-C8
1-D8
1-K7
1-K9
WASHER,PLAIN CYL. HEAD--- 1-E3
WASHER,PLAIN-FRAME------- 2-C6
WASHER,SETTING---------- 2-J16
WASHER,STOP---------- 2-G4
2-H7
WASHER,THRUST---------- 1-H6
1-J6
2-I3
WASHER,THRUST LOCK-OVER T 1-J6
WASHER,THRUST-REVERSE IDL 1-I6
WASHER,TOOTHED---------- 3-E9
WASHER,WAVE-CHANGE CONT.C 1-L6
WASHER'A',DECK LOCK------ 3-M5
WASHER'B',DECK LOCK------ 3-M5
WEATHERSTRIP NO.1-------- 3-G3
WEATHERSTRIP NO.2-------- 3-G3
WEATHERSTRIP(L)------- 2-K16
WEATHERSTRIP(L),DOOR--- - 2-L16
WEATHERSTRIP(L),OUT.----- 3-G3
WEATHERSTRIP(R)---------- 2-K16
WEATHERSTRIP(R),DOOR----- 2-L16
WEATHERSTRIP(R),OUT.----- 3-G3
WEATHERSTRIP,BONNET-REAR- 2-M11
WEATHERSTRIP,D.TOP-REAR-- 3-N5
WEATHERSTRIP,LID--------- 2-C12
WEDGE,DOOR-FRONT--------- 3-F3
WEIGHT,DISC WHEEL-ALUMI-- 2-L5
WEIGHT,DISC WHEEL-STEEL-- 2-K5
2-L5
WELT,SEAMING---------- 2-L16
WELT,SEAMING-SOFT TOP---- 3-G5
WHEEL SET,DISC-ALUMI----- 2-M5
WHEEL,DISC-ALUMI.-------- 2-M5
WHEEL,DISC-STEEL--------- 2-K5
WHEEL,DISK-TEMPORARY----- 2-L5
WHEEL,FLY---------- 1-J3
WINDOW,BACK-D. TOP------- 3-G5
WIRE,A.C.C.---------- 3-E7
WIRE,CONNECT---------- 2-D16
2-L15
WIRE,EARTH---------- 3-C8
WIRE,EARTH-HYD. UNIT----- 2-E8
WIRE,MODE CONTROL-------- 3-E4
WIRE,RECYCLE & FRESH----- 3-E4
WIRE,RELEASE-BONNET------ 2-M11
WIRE,TEMP. CONTROL------- 3-E4
WIRING,INJECTOR---------- 3-D8
WRENCH,HUB NUT---------- 3-K9
WRENCH,WHEEL CAP--------- 3-K9
WTHSTP NO.1(L),LINK------ 3-I5
WTHSTP NO.1(R),LINK------ 3-I5
WTHSTP NO.2(L),LINK-- --- 3-I5
WTHSTP NO.2(R),LINK------ 3-I5
WTHSTP NO.3(L),LINK------ 3-I5
WTHSTP NO.3(R),LINK------ 3-I5
WTHSTP(L),CAB SIDE------- 3-J5
WTHSTP(L),ROOF PANEL----- 3-C6
WTHSTP(R),CAB SIDE------- 3-J5
WTHSTP(R),ROOF PANEL----- 3-C6
WTHSTP,FRONT HEADER------ 3-J5

****
* *
* Y *
* *
****

YOKE---------- 1-F7
1-H7
YOKE SET,SUPPORT-ST. GEAR 2-L4
YOKE,SUPPORT---------- 2-J4

MODEL IDENTIFICATION

This parts catalog has been compiled to cover the following models.

Model No.	Specifications of vehicles																											VIN (Chassis No.)
	Basic spec.	Engine	CC	DOHC	T/mission		Speed		Damper		Brake	Diff.		Antilock brake system		Production period		Model year		U.S.A.								
																				Production	Grade							
	U.S.A.	Gasoline engine	1800cc	DOHC	Manual T/mission	Automatic T/mission	4 speed	5 speed	Bilstein damper	EXC. Bilstein damper	4 disc	Normal diff.	Limited slip diff.	W/O antilock brake	W/ antilock brake	From	To	1997		Production for U.S.A.	BASE	New PKG.	P.E.GP.	Leather PKG.	R PKG.	Touring PKG.	Final special version	
	(US)	(GE)	(1.8)	(DH)	(MT)	(AT)	(4S)	(5S)	(BD)	(EB)	(4DS)	(ND)	(LS)	(W/O AL)	(AL)						(BS)	(NP)	(PE)	(LP)	(RP)	(TP)	(FS)	
NB84	US	GE	1.8	DH	MT			5S		EB	4DS	ND		W/O AL		Jul. '96	Nov. '97	→		Yes	BS	NP				TP	FS	NA35 * – 700001 ~ 800000
NB85	US	GE	1.8	DH	MT			5S		EB	4DS		LS	W/O AL		Jul. '96	Nov. '97	→		Yes			PE	LP				NA35 * – 700001 ~ 800000
NB86	US	GE	1.8	DH	MT			5S		EB	4DS		LS		AL	Jul. '96	Nov. '97	→		Yes			PE	LP				NA35 * – 700001 ~ 800000
NB87	US	GE	1.8	DH	MT			5S	BD		4DS		LS	W/O AL		Jul. '96	Nov. '97	→		Yes					RP			NA35 * – 700001 ~ 800000
NB88	US	GE	1.8	DH		AT	4S			EB	4DS	ND		W/O AL		Jul. '96	Nov. '97	→		Yes	BS	NP	PE			TP	FS	NA35 * – 700001 ~ 800000
NB89	US	GE	1.8	DH		AT	4S			EB	4DS	ND			AL	Jul. '96	Nov. '97	→		Yes				LP				NA35 * – 700001 ~ 800000

AUNA06

BODY PAINTS AND INTERIOR COLORS

THIS LIST SHOWS COMBINATION OF BODY PAINT AND INTERIOR COLOR. USING THIS LIST YOU WILL BE ABLE TO FIND OUT NECESSARY COLOR CODE OF PART YOU NEED IN THE TEXT.

BODY PAINT		INTERIOR COLOR CODE	
NAME	CODE		
Satellite blue mica	A5		N A 5
Neo green	HU	N A 3	N A 5
Montego blue mica	M8	N A 3	N A 5
Chaste white	PT	N A 3	N A 5
Brilliant black	PZ	N A 3	N A 5
Classic red	SU	N A 3	N A 5
Twilight blue mica	12K	N A 3	N A 5
Marina green mica	13C	N A 3	N A 5

AUNA06

NOTE:1)
COLORS OF INTERIOR CODES ARE AS FOLLOWS.

N A 3	Black
N A 5	Tan

NOTE:2)
THE FOLLOWING INTERIOR COLOR CODES ARE NOT SHOWN IN THIS LIST THOUGH THESE ARE IN THE TEXT.

BECAUSE, THESE ARE NOT USED ON THE PRODUCTION LINE AT PRESENT(UP TO Jul. 1998)

N A 4	Tan

COMPLETE ASSEMBLY PARTS NUMBERS

T/mission

Specifications of vehicles	Parts number
T/mission	
Manual T/mission	M50Z – 03 – 000
Automatic T/mission	N451 – 19 – 090E

Cabin (1/1)

Parts number
NB84 – 07 – 000

Complete assemblies are available and manufactured in accordance with current production specifications only.
No engine complete No. is described on models the Partial engine is established.
(For Partial engine, see section 1000.)

AUNA06

VEHICLE IDENTIFICATION SYSTEM FOR MX-5 MIATA SERIES (1997)

VIN (= Vehicle Identification Number) for MX-5 MIATA series (1997 Year Model) consists of WMI(= World Manufacturer Identifier), VDS(= Vehicle Description Section) and VIS(= Vehicle Identification Section). VDS consisting of six alphanumeric characters denotes the "MODEL SERIES". VIS consisting of eight alphanumeric characters denotes the serial unit number of vehicle and is sequentially numbered within each VDS.

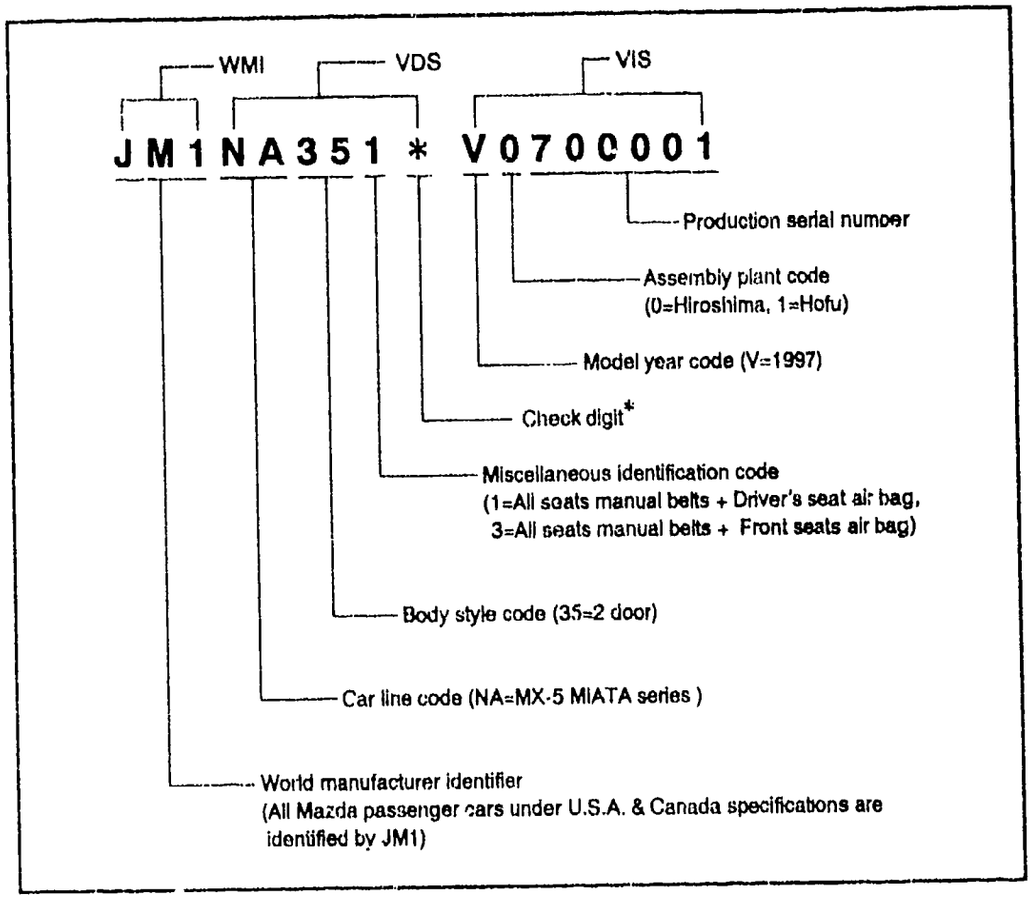

* Check digit is included as a VIN security feature to permit law enforcement verification of the authenticity of a suspected illegal VIN plate. This single digit number is determined, based upon a complex mathematical formula which is applied to each vehicle's VIN number.

LOCATION OF VIN PLATE

The plate is attached to the top ledge of the dash panel under the bonnet(engine hood), refer to the illustration shown right.

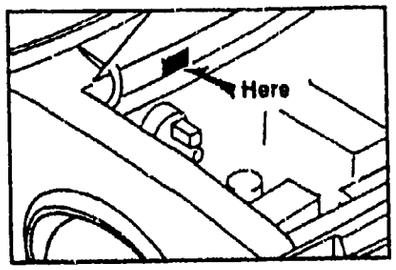

(Note)

If the VIN(Chassis) reference number in the PCM(Parts Catalog Microfiche) appeared as:

NA35 * - 700001

...the vehicle's VIN would be e.g. JM1NA351 * V0700001.

AUNA06

ABBREVIATIONS

The following abbreviations are used throughout Mazda Microfiche parts catalog : in the illustration, tex, section number index, alphabetical index.

English(1/3)

Abbreviation	Definition
1ST	First
2ND	Second
2D.	2-Door
2-SEAT	2-Seater
3D.	3-Door
3RD	Third
3-SP	3-Speed
4D.	4-Door
4-SP or 4-SPD	4-Speed
4/5-SP	4-Speed/5-Speed
4TH	Fourth
5D.	5-Door
5-LINK	5-Link Suspension
5-SP or 5-SPD	5-Speed
10TH-ANNIV.	10th-Anniversary
A	
..A	..Ampere
A.A.S. or A.A.SUSP	Automatic Adjusting Suspension
ABS.	Absorber
A.B.S.	Anti lock Brake System
A.B.S.V.	Air Bleed Solenoid Valve
A.C.	Air Conditioner
A.C.C.	Automatic Cruise Controls
ACCEL.	Accelerator
ACTR	Actuator
A.C.V.	Air Control Valve
ADJ.	Adjuster or Adjustable or Adjusting
ADJ.SUSP	Adjustable Suspension
AIR P.	Air Pipe
AIR CON.	Air Conditioner
ALTN	Alternator
ALUMI.	Aluminum
AMP.	Amplifier
ANALOG	Analogue
ANNIV.	10th Anniversary
ANT	Antenna
ARG	Argent
A.S. ABSORBER	Adjust Shock Absorber
ASH.	Ashtray
ASS'Y	Assembly
AT	Automatic Transmission
ATT	Attachment
AUS	Austria
AUST.	Australia
AUTO.	Automatic
B	
BAL.	Balance
BAT	Battery
B.COLOR	Body Color
B/DOOR	Back Door
BDY	Body
BELT.	Beltline
BLK	Black
BLU	Blue
BLU/GRY	Bluish Gray
BLU. M	Blue Metallic
BLVA	Bolivia
BRG	Bearing
BRKT	Bracket
BRN	Brown
BRT	Britain (=Great Britain)

Abbreviation	Definition
B.S.V.	Bleed Solenoid Valve
BTHR	Breather
BUMP.	Bumper
BURG.	Burglar
BY.A.C.V.	Bypass Air Control Valve
C	
C. or (C)	Center
CALIF.	California
C/AREA	Cold Area
CAN.	Canada
CARB.	Carburetor
CAT	Catalyst
C.DISC	Compact Disc
CE	Conventional Engine (=Reciprocating Gasoline Engine)
C.E.D.	Consolidated Emission Directive
C.G.R.	Constant Gear Ratio
CH	Coach
CH/G	Change
CH/MBR	Chamber
CHK	Check
CLG.	Cooling
CLNR	Cleaner
C/LTR	Cigarette Lighter
CLU	Clutch
..CM	..Centimeter (s)
C.MEMBER	Crossmember
CNTNR	Container
COMB.	Combination
COMP.	Companion
COMPR	Compressor
COMPS.	Compensator
CONDSR	Condenser
CONN.	Connector or Connecting
CONS.	Console
CONT.	Control
CONV.	Conventional
CONVR	Convertor
COVR.	Cover
CPE	Coupé
CPT.	Complete Assembly
CPU	Computer
C.P.UNIT	Central Processing Unit
CRK	Crank
CRUST	Cruster
C/SHIFT	Column Shift
CTR.	Center
CUSH.	Cushion
CYL.	Cylinder
D	
D. or DR	Door
D..	Diameter..
DBL CAB	Double Cab (=Crew Cab)
D. BLUE	Dark Blue
D. BRN	Dark Brown
DE	Diesel Engine
DEF.	Defroster
DEFG	Defogger
DES	Design
DEMIST.	Demister

Abbreviation	Definition
D. GRY	Dark Gray
DIAPH	Diaphragm
DIFF.	Differential
DISC/B	Disc Brake
DIST	Distributor
DMPR	Dumper
DOHC	Double Overhead Camsh 1
D.P.	Dual Proportioning
DRUM/B	Drum Brake
D/TIRE or D.TIRE	Double Tire (=Dual Tire)
D.T. TOP	Detachable Top
DUMP.	Dump Truck
DX.	Deluxe
D. YLW	Dark Yellow
E	
ECE	Economic Commission for Europe
ECON.	Economy
E.C.P.S. SYS	Electric Control Power Steering System
EGI	Electric Gasoline Injection
E.G.R.	Exhaust Gas Recirculation
ELECT.	Electric
EM.	Emission Controls
ENEGY or ENGY	Energy
ENG.	Engine
EQLZR	Equalizer
EQUIP.	Equipment
EX.	Exhaust
EXC.	Except
EXC.10TH-ANNIV.	EXC.10th-Anniversary
EXT.	Extension
EXTRACT.	Extractor
F	
F -	Front-
..F	..feet (.foot)
FED.	Federal
FINIS	Finisher
F.I.P.	Fuel Injection Pump
FLEX	Flexible
F.I MIXER	Fuel Injection Mixer
FIX.	Fixing
F/LID	Filler Lid
F.L.DECK	Full Logic Deck
FOLD.	Folding
FRA	France
FRT	Front
F/SHIFT	Floor Shift
FULL CON.	Fully Controlled
G	
..G	..Gram(s)
GARN	Garnish
GAS.	Gasoline
GASOH	Gasohol
GEN	General
G.HATCH	Glass Hatch
GLD M	Gold Metallic
GLS	Glass
GOV.	Governor
GRN	Green
GRY	Gray

English(2/3)

Abbreviation	Definition
GRY/GRN	Grayish Green
H	
H	Head
HARN.	Harness
H.A.C.	High. Altitude Compensator
H.A.COMPENSATOR	High. Altitude Compensator
HB	Hatchback
H.B. RE	Hatchback Release
HC-A/T	Hydro Control Automatic T/Mission
H/DUTY	Heavy Duty
HEA. or HEAT.	Heater
HI. -	High -
HI.ALTI	High Altitude
H.I.C.	Head Injury Criteria
HIGHT	High-Tension
HL or H.L. or H/LAMP	Head Lamp
H. KONG	Hong Kong
HNGR	Hanger
..HP	..Horsepower(s)
H.P.R.	High Penetration Resisted
HSG	Housing
HT, H/T or H/TOP	Hardtop
HWI	Hawaii
I	
ID.	Inner Diameter
IG or IGN.	Ignition
IL	Island
ILLUMI.	Illumination
IMMOBI.	Immobilizer
IN.	Inlet
INC.	Indicator
INHIB.	Inhibitor
INJ.	Injection
INN.	Inner
INS.	Insulation
INSP.	Inspection
INST.	Instrument
INT.	Interior
INT.COOLER	Inter Cooler
INTER	Intermediate
INTMT. or INTERMIT.	Intermittent
I.R.S. or I.R. SUSP	Independent Rear Suspension
I.S.C.	Idle Speed Control
IVRY	Ivory
K	
..KG	..Kilogram(s)
..KM	..Kilometer(s)
..KW	..Kilowatt(s)
L	
L or (L)	Left
L -	Length -
..L	..Liter(s)
..L T.	..Liter(s) Tank
L/..	Less.. (=Without..)
L/A.A. SUSP	Less Automatic Adjusting Suspension
L/A.C.	Less Air Conditioner
L/BODY	Long Body
L/BOX	Long Box
L/CPMT	Luggage Compartment

Abbreviation	Definition
L.C.DISPLAY	Liquid Crystal Display
L/EGI	Less Electric Gasoline Injection
L/EM	Lean Emission Controls
L.H.D.	Left Hand Drive
LH. SIDE	Left Hand Side
LKOUT	Lockout
L. NOSE	Long Nose
L/NVGT. CPU	Less Navigation computer
LO.	Low
L.S. VALVE	Load Sensing Valve
L/PARTITION	Less Partition
L.P.G.	L.P. Gas (=Liquefied Petroleum Gas)
L.S.D. or L.S. DIFF	Less Slip Differential
..L T.	..Liter(s) Tank
L/TAILGATE	Less Tailgate
VR	Lever
LWR	Lower
LRG.	Large
LX-P	LX with Performance Package
M	
..M	..Meter(s)
MA. CYL.	Master Cylinder
MAINT.	Maintain or Maintenance
MAP	Manifold Absolute Pressure
M.A. SUSP	Multi-Adjustable Suspension
M. EAST	Middle East
M/F	Maintenance Free
MIR	Mirror
ML	Mainland
MLD. or MLDG.	Moulding
..MM	..Millimeter(s)
M.P.	Multipoint
MPX.	Multiplex
MRN	Maroon
MT. & MTG.	Mounting
MT	Manual Transmission
N	
N=	Number of Teeth
NARR.	Narrow
N.C.	Normal Close
N.O.	Normal Open
NO.	Number
NON-SP.	Non-Special Equipment
NON-TILT	Non-Tilting
NOR.	Normal
NOZ.	Nozzle
N.S.W.	New South Wales (Aust.)
NVGT. CPU	Navigation Computer
N.Z.	New Zealand
O	
O	Over
OD.	Outer Diameter
O.FLTR	Oil Filter
O.H.	Over Head
OHC	Overhead Camshaft
OIL CONSUMP.	Oil Consumption
OP	Optional
ORD. BY .	Order By..
O.S.	Oversize

Abbreviation	Definition
O.T.	Over Top
OUT.	Outer
P	
..P	..Panel
(P)	Primary
PARK or PARKG	Parking
PASS.	Passenger
P.B.	Proportioning Brake
P.C.V.	Positive Crankcase Ventilation
PHI.PPNE	Philippines
PILR.	Pillar
PIV	Pivot
PKG.	Package
PNEUMA.	Pneumatic
PNL.	Panel
PNT	Point
POSI.	Position
POSIT.	Positive
POW. WINDOW	Power Window
P.P.	Polypropylene (Plastics)
PRACT.	Practical
PRESS	Pressure
PROTN	Protection
PRO TR.	Protector
PORTGL	Portugal
P.S.	Power Steering
P.SOUND	Premium Sound
PSTN	Piston
PTC	Positive Temperature Coefficient
P.T.O.	Power Take Off
PU	Pickup
P/W or P. WINDOW	Power Window
PWRGT LIFTR	Power Gate Lifter
PWT.	Powertrain
Q	
QTR.	Quarter
Q'TY	Quantity
R	
R	Final Gear Ratio
.. R or (R)	.. Right
RAD.	Radiator
RE	Rotary Engine
RECIPRO	Reciprocating Engine (=Conventional Engine)
REFRIGER.	Refrigerator Van
REG. or REGU.	Regular
REG. GAS	Regular Gasoline
REGUL.	Regulator
REL.	Release
REM. CON.	Remote Controlled
RET.	Return
RETAIN.	Retaining
RETRACT	Retractable
REV.	Reverse
R.H.D.	Right Hand Drive
RICO	Puerto Rico
R.H. SIDE	Right Hand Side
REINF.	Reinforcement
R. or RR.	Rear
S	
..S	..Side
(S)	Secondary
SAFE.	Safety

Abbreviation	Definition	Abbreviation	Definition	Abbreviation	Definition
S. AFRICA	South Africa	TURB.	Turbocharger		
SAUDI	Saudi Arabia	TWN	Twin		
S/BODY	Short Body	U			
S/BOX	Short Box	U.K.	The United Kingdom		
SDN	Sedan	U. LONG	Ultra Long		
S/DUTY	Standard Duty	UND	Under		
SELECT.	Selective Use	UP	Upper		
SEN.	Sensor	URETANE	Urethane Rubber		
SERV.	Service	U.S.	Undersize		
S.FORK	Shift Fork	V			
SG., SGN or SIG.	Signal	..V	..Volt(s)		
SHIFT	Shift	..V.	Valve		
SHRD	Shroud	VAC.	Vacuum		
SHTR	Shutter	V.CHAMBER	Vacuum Chamber		
SILV. M or SILVER M.	Silver Metallic	Vent.	Ventilator or Ventilation		
SING	Singapore	V.G.R.	Variable Gear Ratio		
SILEN	Silencer	VNL	Vinyl		
SLDG	Sliding	W			
SLN	Saloon	..W	..Watt(s)		
SML.	Small	W. or WIND	Window		
S. NOSE	Short Nose	W=	Width=		
SOL.	Solenoid	W/..	With.. or Use with		
SP.	Speed	W/O L.S. VALVE	W/O Load Sensing Valve		
SPEC.	Specification				
SPEEDO.	Speedometer	W/O OIL CONSUMP	W/O Oil Consumption		
SPG.	Spring	W/O P.T.O.	W/O Power Take-Off		
SPK.	Speaker (=Loud-speaker)	WARN.	Warning		
		WAS.	Washer		
SPLR	Spoiler	W/AUTO BELT	With Automatic Shoulder Belt		
ST.	Steering				
STAB.	Stabilizer	W/CHASSIS	Windshield Chassis		
STD.	Standard	WAT	Water		
S/TIRE or S. TIRE	Single Tire	WGN	Wagon		
STYL	Styled	WHL	Wheel		
SUB-TRNS	Sub-transmission	WHT	White		
SUN SHLD	Sun Shield	WIND..	Window		
SURGT.	Surge Tank	WIP.	Wiper		
SUP. GAS	Super Gasoline	W/O AUTO BELT	Without Automatic Shoulder Belt		
SUSP	Suspension				
S.V.	Solenoid Valve	W/O..	Without..		
SW.	Switch	WOOF.	Woofer		
S. WASHER	Screen Washer (Windshield Washer)	W. PUMP	Water Pump		
		WSHLD or WNDSHLD	Windshield		
SWD.	Sweden	WSTR or W/THSTP	Weatherstrip		
SYNC.	Synchronizer	W/T	With Tube (Tire)		
T		Y			
..T	..Ton(s)	YLW	Yellow		
T=..	Thickness=..	YLW/GRN	Yellowish Green		
TACH. & TACHOM	Tachometer	YLW/WHT	Yellowish White		
T.ADJUST	Time Adjusting	Z			
TACHOZ TACHOM.	Tachometer	Z.TEMP	Zone Tempered		
T.BELT	Timing Belt				
T/CEILING	Top Ceiling				
TEMP.	Temperature				
T/F	Transfer				
TH.	Throttle				
THAI	Thailand				
THERM.	Thermostat				
THROT.	Throttle				
T/L	Tubeless				
T/MISSION	Transmission				
TRD CLMT	Torrid Climates				
TRK	Truck				
TRQ. GLIDE	Torque Glide				
T. TOBAGO	Trinidad and Tobago				