Parts Catalog

Mazda MX-5 MIATA
U.S.A. & Canada
('01 ►)

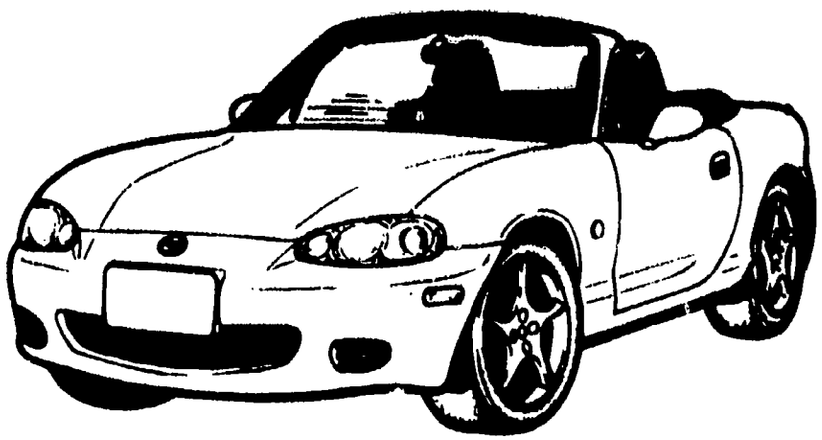

NB35 * *-200001~

Jan. '02 (REVISED)

Catalog No. AU-NA08-04

© 2002 Mazda Motor Corporation

LAYOUT OF CONTENTS / DISPOSITION TYPOGRAPHIQUE DE CONTENU / DISPOSICION DEL CONTENIDO / ANORDNUNG DES INHALTS

- The following is a typical example of the layout of contents on Mazda microfiche parts catalog.
- Voici un exemple typique de la disposition typographique de contenu dans les microfiches de catalogue des pièces de Mazda.
- El siguiente es un ejemplo típico de la disposición del contenido en una microficha del catálogo de repuestos de Mazda.
- Folgendes ist ein typisches Beispiel der Inhaltsanordnung des Mazda-Mikrofiche-Teilekatalogs.

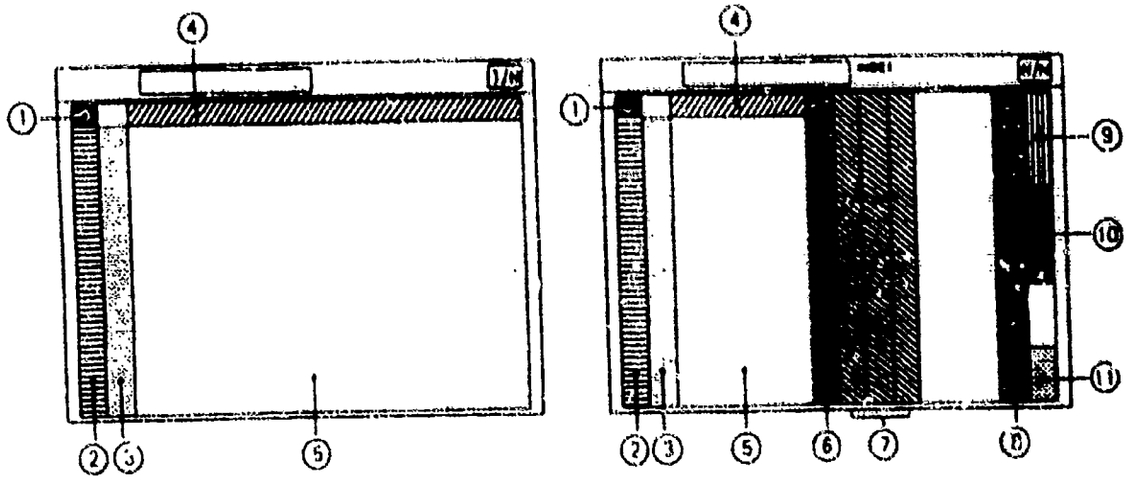

Remark : The items listed under ④ have been deleted from each fiche since Dec. '93

① · Layout of contents
· Disposition Typographique de Contenu
· Disposición del contenido
· Anordnung des Inhalts

② · Pictorial Index
· Index par Schémas
· Indice Gráfico
· Illustrierter Index

③ · Master Section No. Index
· Index des Numéros des Sections Totale
· Indice del Número de la Sección Maestra
· Hauptabschnittsnummer-Index

④ ~~· Section No. Index for the Column~~
~~· Index des Numéros des Sections pour les Colonnes~~
~~· N° de la Sección para el Indice~~
~~· Abschnittsnummer-Index für die Spalte~~

⑤ · Illustration & Text
· Illustrations et Textes
· Ilustración y Texto
· Abbildung und Text

⑥ · Part No. Index
· Index des Numéros des Pièces
· Indice del N° de Pieza
· Teile-Nr. Index

⑦ · Alphabetical Index
· Index Alphabétique
· Indice Alfabético
· Alphabetischer Index

⑧ · Model Identification
· Identification des Modèles
· Identificación del Modelo
· Modell Kennzeichnung

⑨ · Vehicle Identification System
· Systeme d'Identification de Véhicule
· Sistema de Identificación de Vehículo
· Fahrzeug Identifikations system

PICTORIAL INDEX

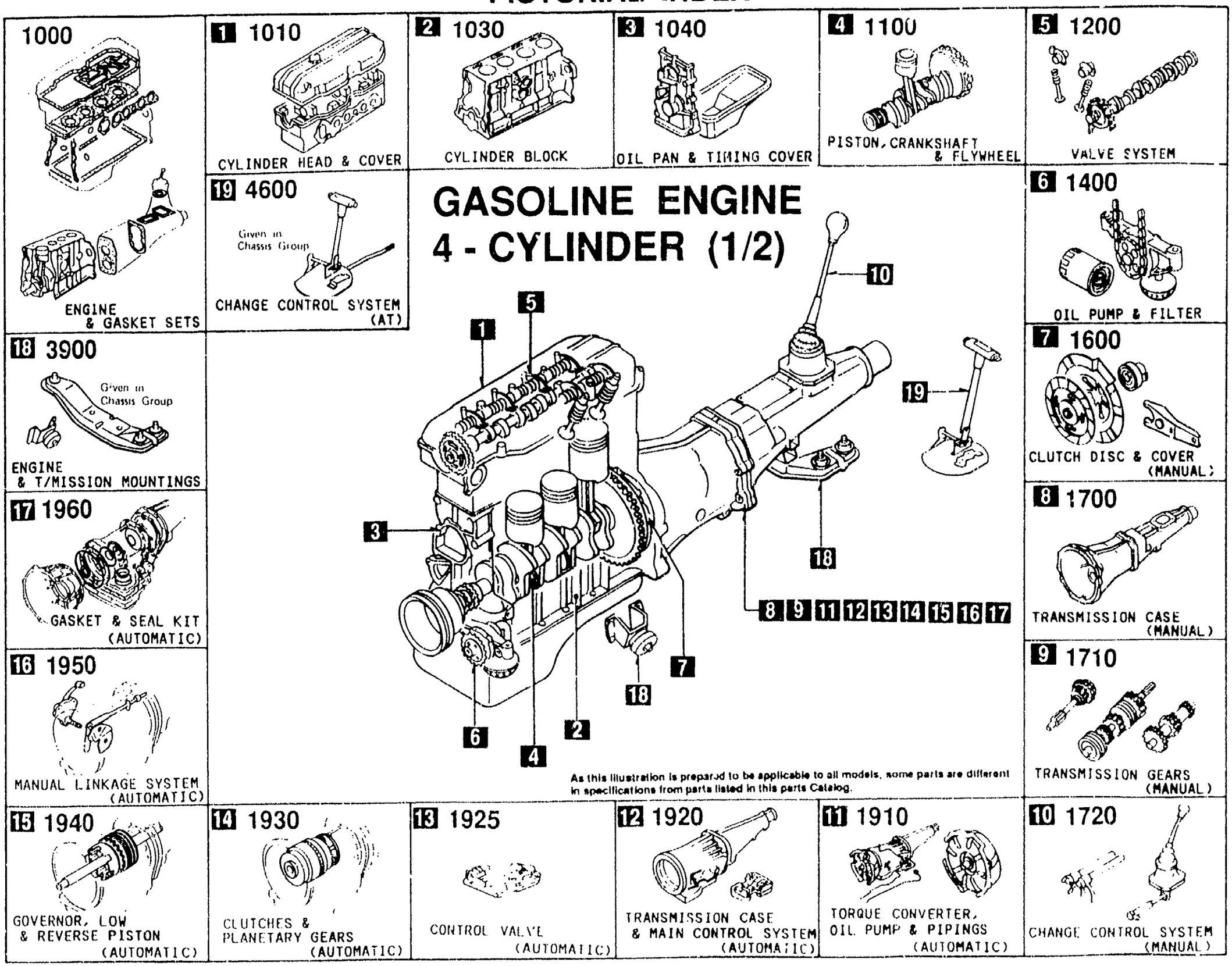

PICTORIAL INDEX

1 1300

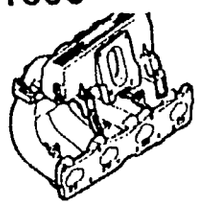

INLET MANIFOLD

2 1310

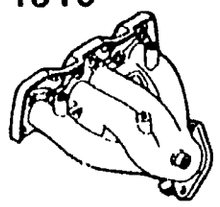

EXHAUST MANIFOLD

3 1320

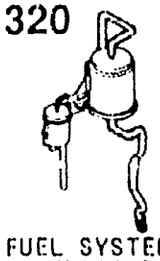

FUEL SYSTEM

4 1325

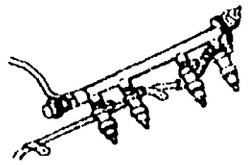

FUEL DISTRIBUTOR

5 1330

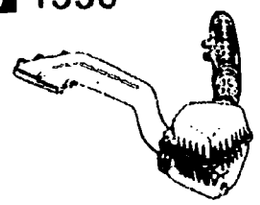

AIR CLEANER

6 1364

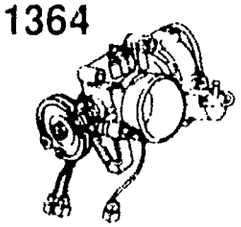

THROTTLE BODY

GASOLINE ENGINE
4 - CYLINDER (2/2)

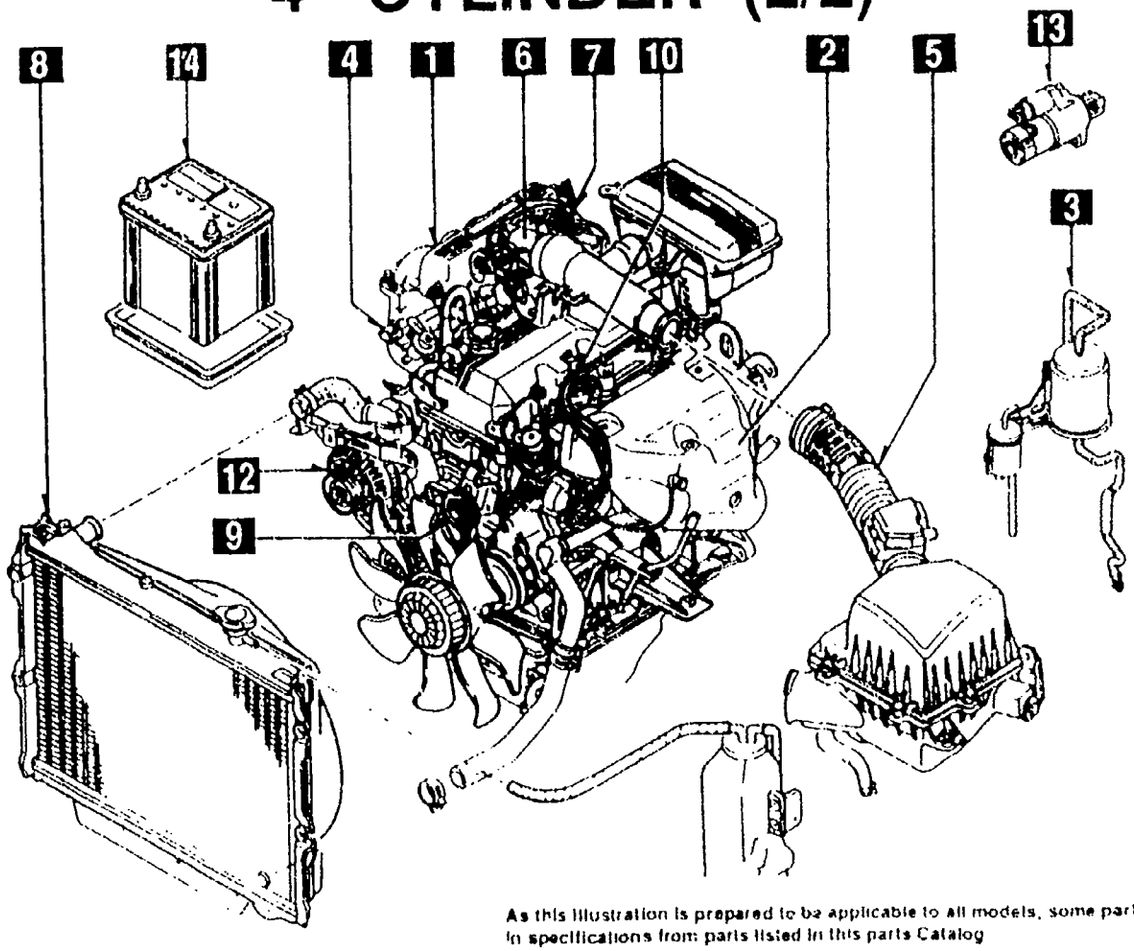

As this illustration is prepared to be applicable to all models, some parts are different in specifications from parts listed in this parts Catalog

7 1370

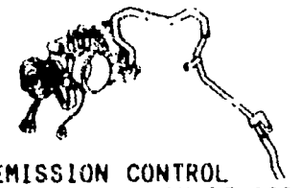

EMISSION CONTROL SYSTEM (INLET SIDE)

8 1500

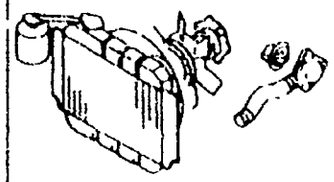

COOLING SYSTEM

9 1580

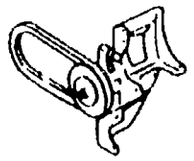

BRACKET, PULLEY & BELT

10 1800

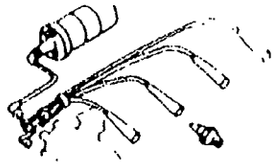

ENGINE ELECTRICAL SYSTEM

11

14 1850

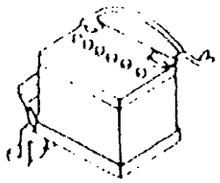

BATTERY

13 1840

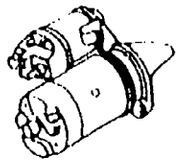

STARTER

12 1830

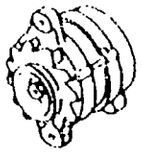

ALTERNATOR

PICTORIAL INDEX

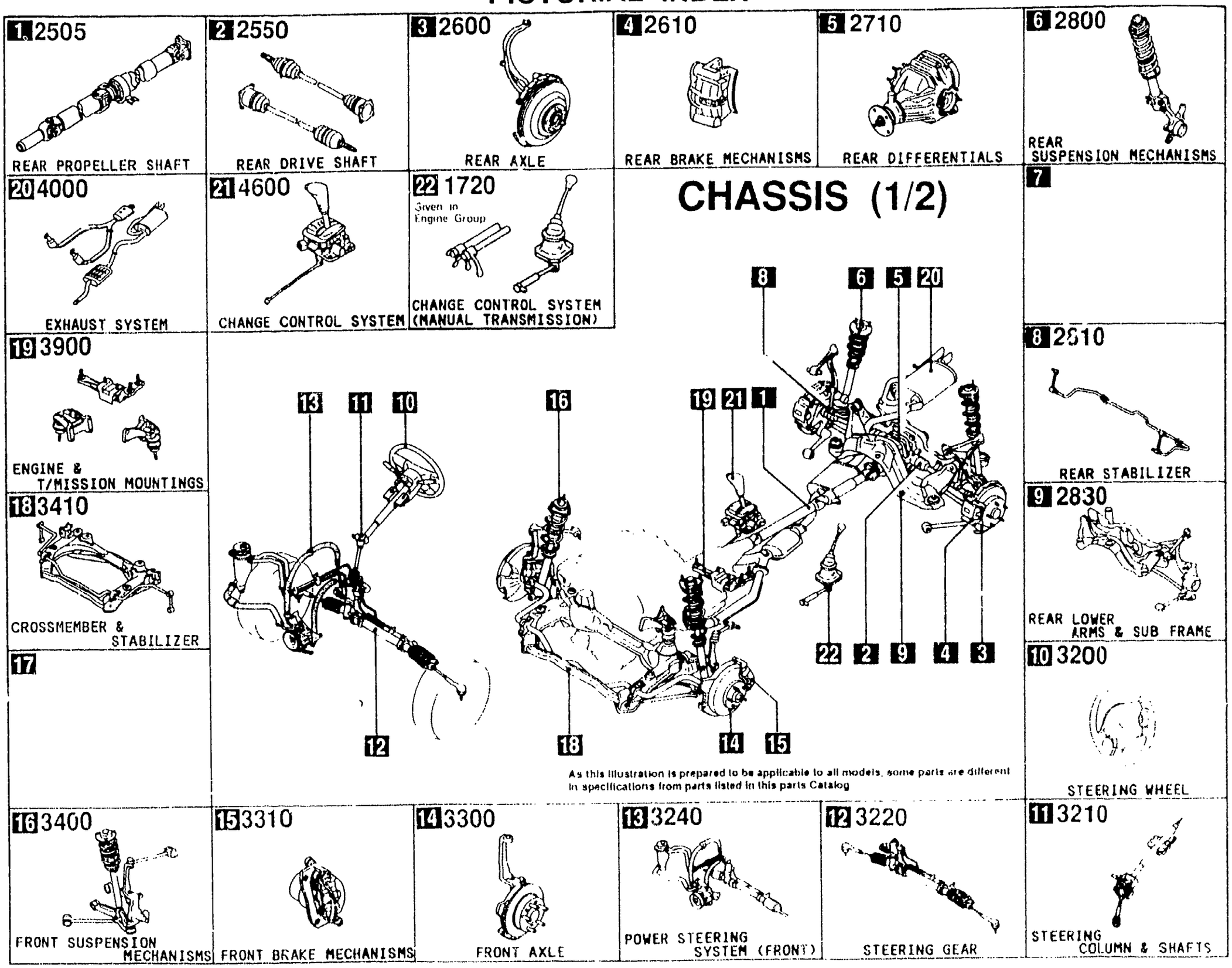

PICTORIAL INDEX

1 3700

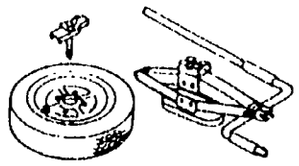

TIRES & JACK

2 4140

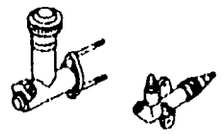

CLUTCH RELEASE & MASTER CYLINDERS

3 4145

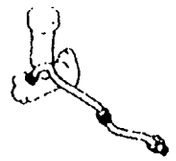

CLUTCH PIPINGS

4 4160

ACCELERATOR CONTROL SYSTEM

5 4200

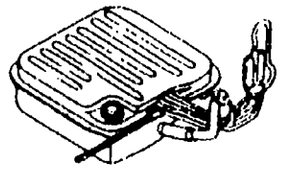

FUEL TANK

6 4210

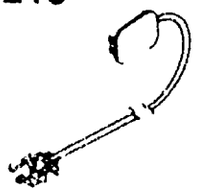

FUEL LID OPENER

CHASSIS (2/2)

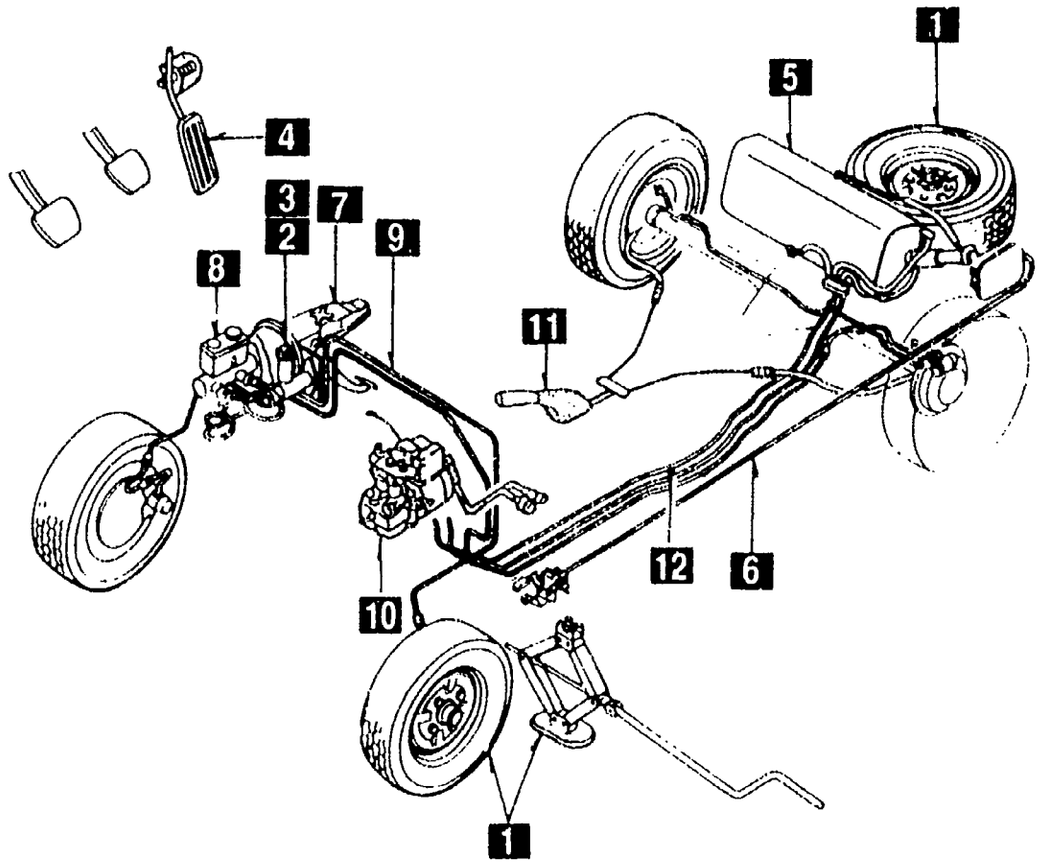

As this illustration is prepared to be applicable to all models, some parts are different in specifications from parts listed in this parts Catalog.

7 4300

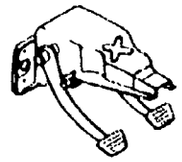

CLUTCH & BRAKE PEDALS

8 4340

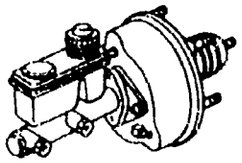

BRAKE MASTER CYLINDER & POWER BRAKE

9 4360

BRAKE PIPINGS

10 4370

ANTILOCK BRAKE SYSTEM

12 4500

FUEL PIPINGS

11 4400

PARKING BRAKE SYSTEM

PICTORIAL INDEX

1 0900

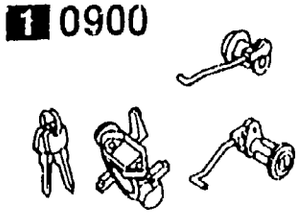

KEY SETS

2 5100

HEAD LAMPS

3 5105

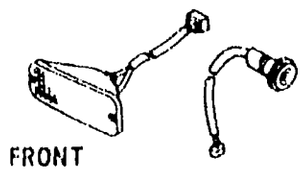

FRONT COMBINATION LAMPS

4 5110

REAR COMBINATION LAMPS

5 5120

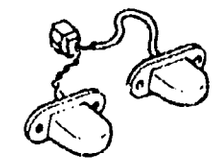

LICENSE LAMPS

6 5125

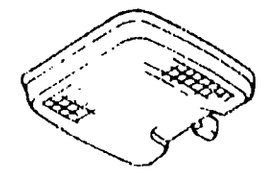

INTERIOR LAMPS

BODY (1/4)

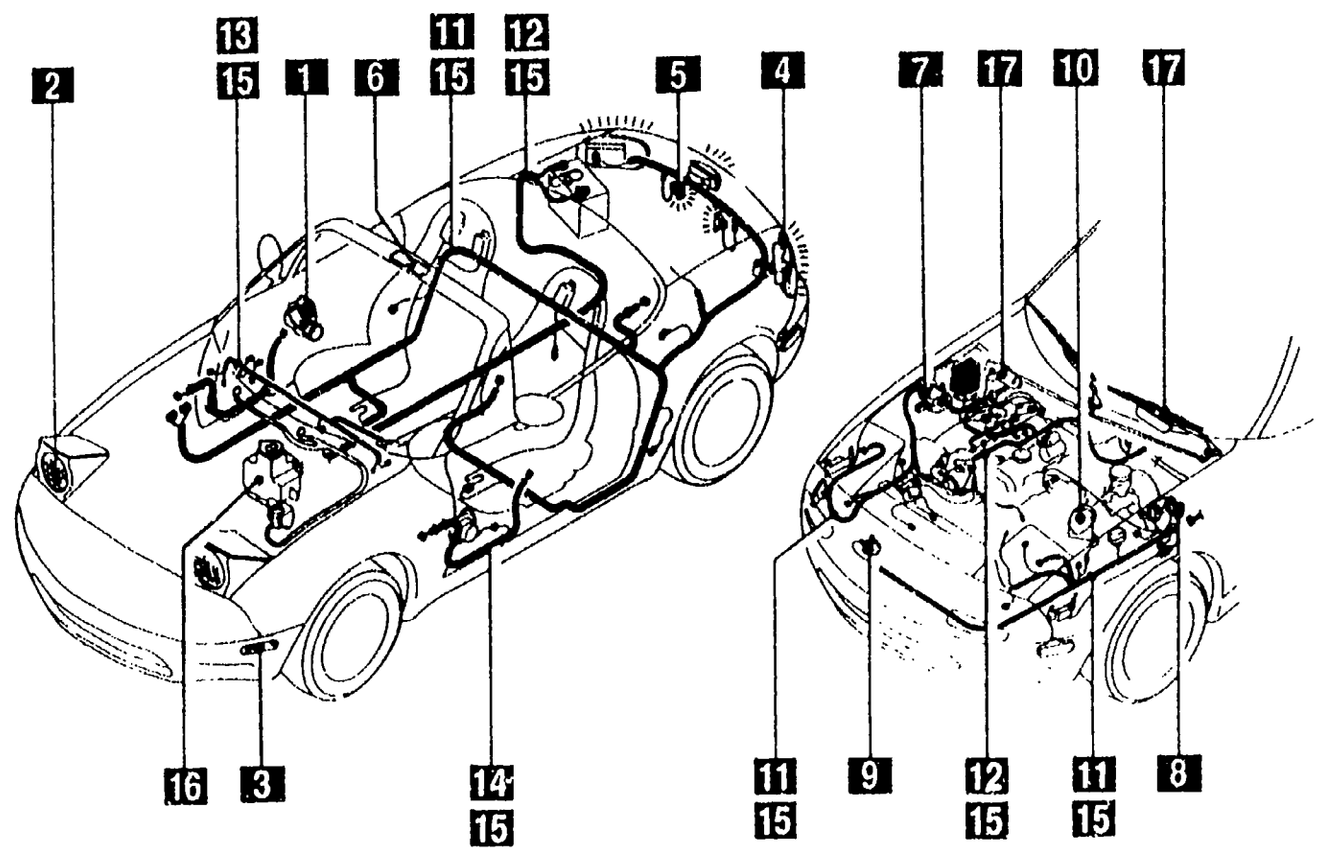

As this illustration is prepared to be applicable to all models, some parts are different in specifications from parts listed in this parts Catalog.

7 6600

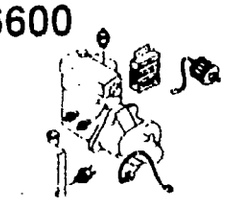

SWITCHES & RELAYS (ENGINE)

8 6630

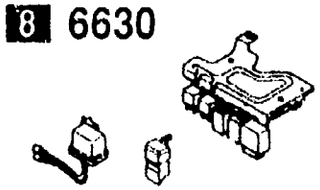

RELAYS & UNIT (BODY)

9 6635

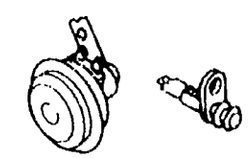

DOOR SWITCH & HORNS

10 6640

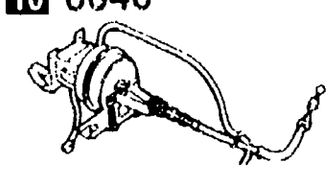

AUTO CRUISE CONTROL SYSTEM

17 6730

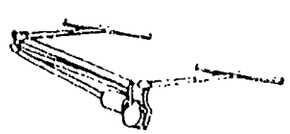

WINDSHIELD WIPERS

16 6720

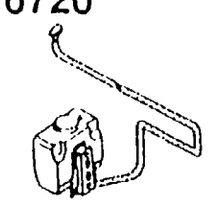

WINDSHIELD WASHER

15 6704

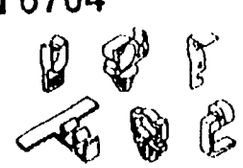

WIRING HARNESS CLAMPS

14 6703

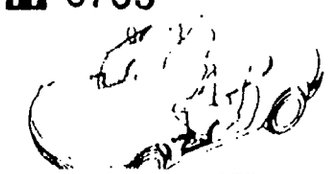

WIRING HARNESSES (DOOR, FLOOR/CEILING)

13 6702

WIRING HARNESSES (DASHBOARD)

12 6701

WIRING HARNESSES (ENGINE & T/MISSION)

11 6700

WIRING HARNESSES (FRONT & REAR)

PICTORIAL INDEX

BODY (2/4)

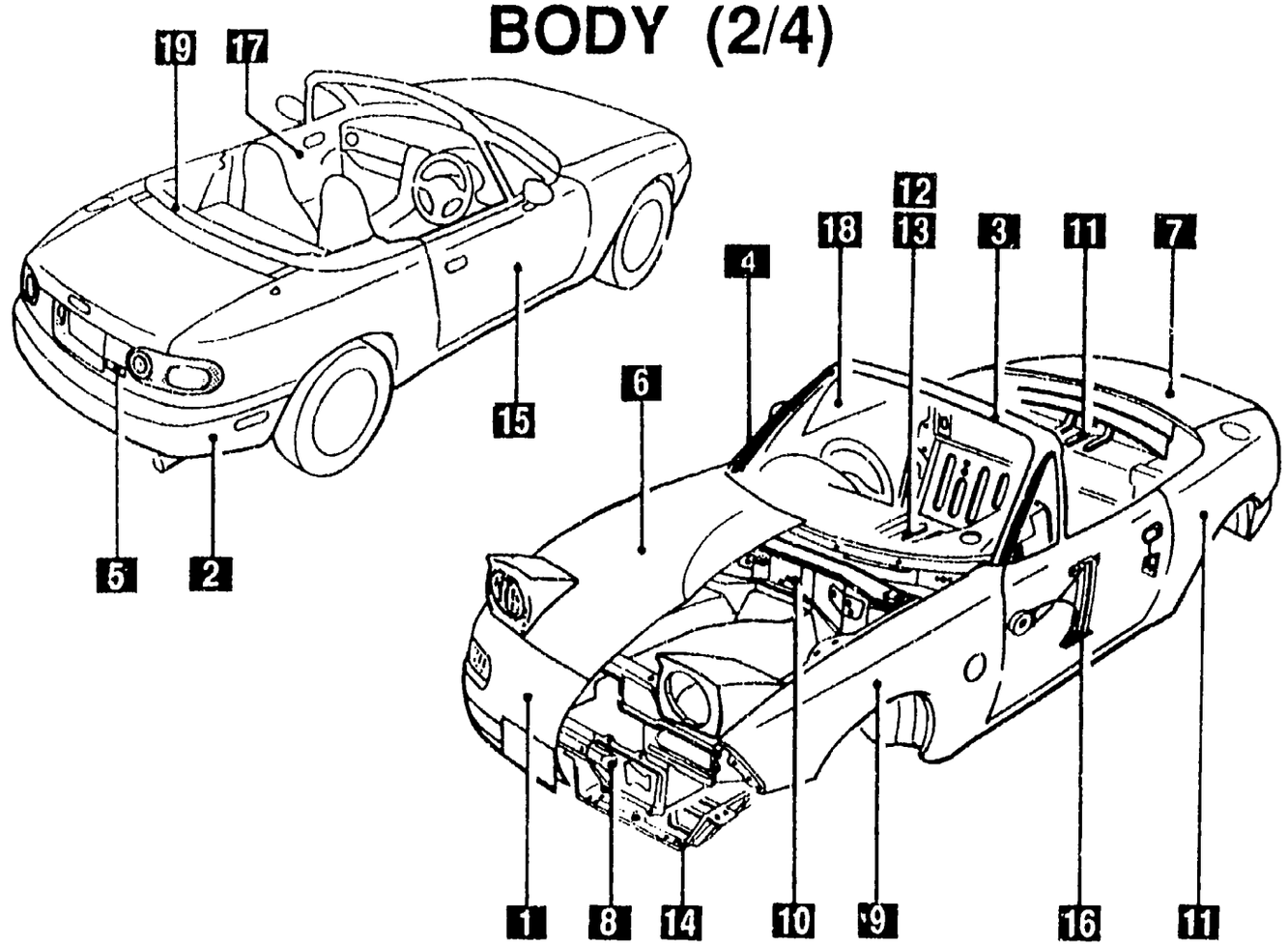

1 5000

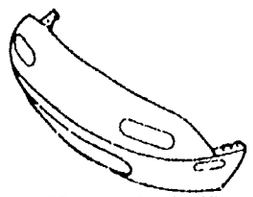

FRONT BUMPER

2 5010

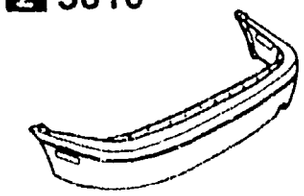

REAR BUMPER

3 5030

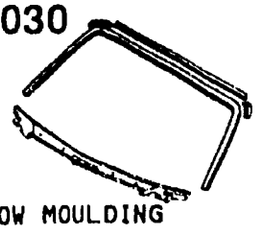

WINDOW MOULDING & COWL GRILLES

4 5040

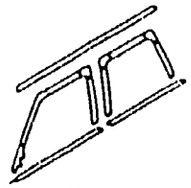

BODY MOULDINGS

5 5170

ORNAMENTS

6 5230

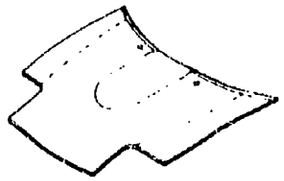

BONNET

7 5260

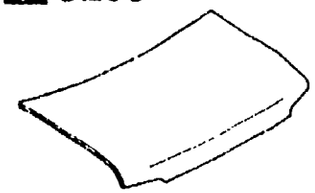

TRUNK LID

8 5310

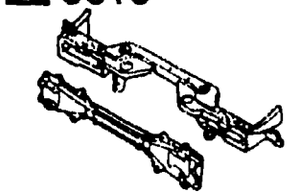

FRONT PANELS

9 5320

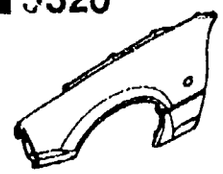

FENDER & WHEEL APRON PANELS

10 5330

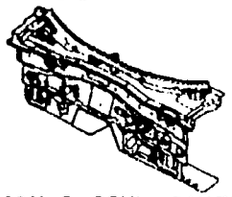

DASH & COWL PANELS

11 5340

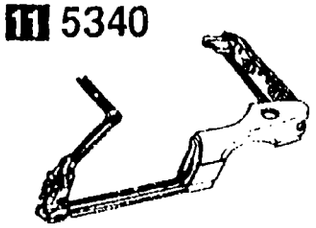

SIDE PANELS

12 5370

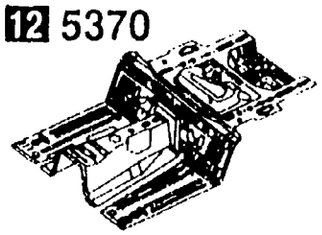

FLOOR PANELS

13 5380

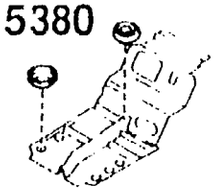

FLOOR ATTACHMENTS (HOLE COVERS)

14 5390

FLOOR ATTACHMENTS

15 5800

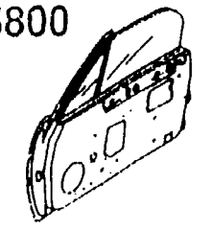

FRONT DOORS

16 5830

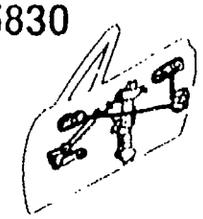

FRONT DOOR MECHANISMS

17 5840

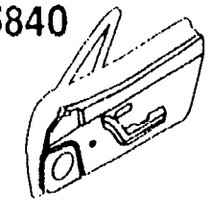

FRONT DOOR TRIMS & RELATED PARTS

18 6300

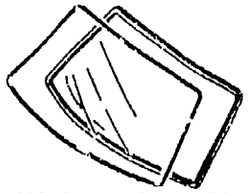

WINDOW GLASSES

19 6330

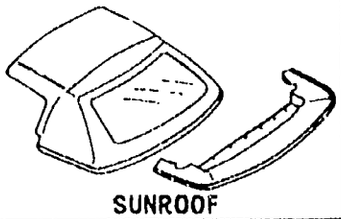

SUNROOF

PICTORIAL INDEX

1 5500

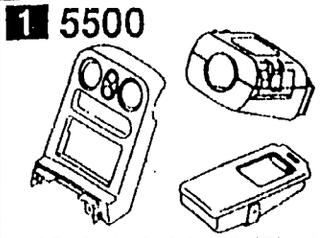

DASHBOARD EQUIPMENTS

2 5520

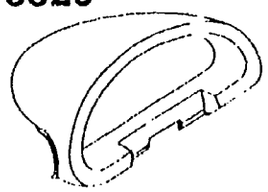

METER HOOD

3

4 5540

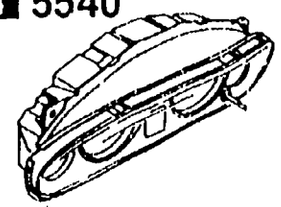

METER COMPONENTS

5 5560

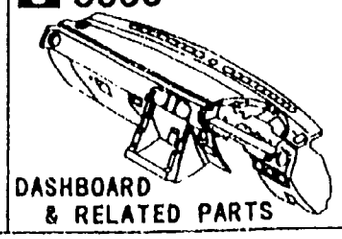

DASHBOARD & RELATED PARTS

6 5570

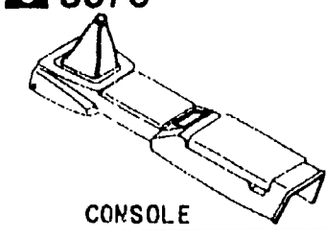

CONSOLE

BODY (3/4)

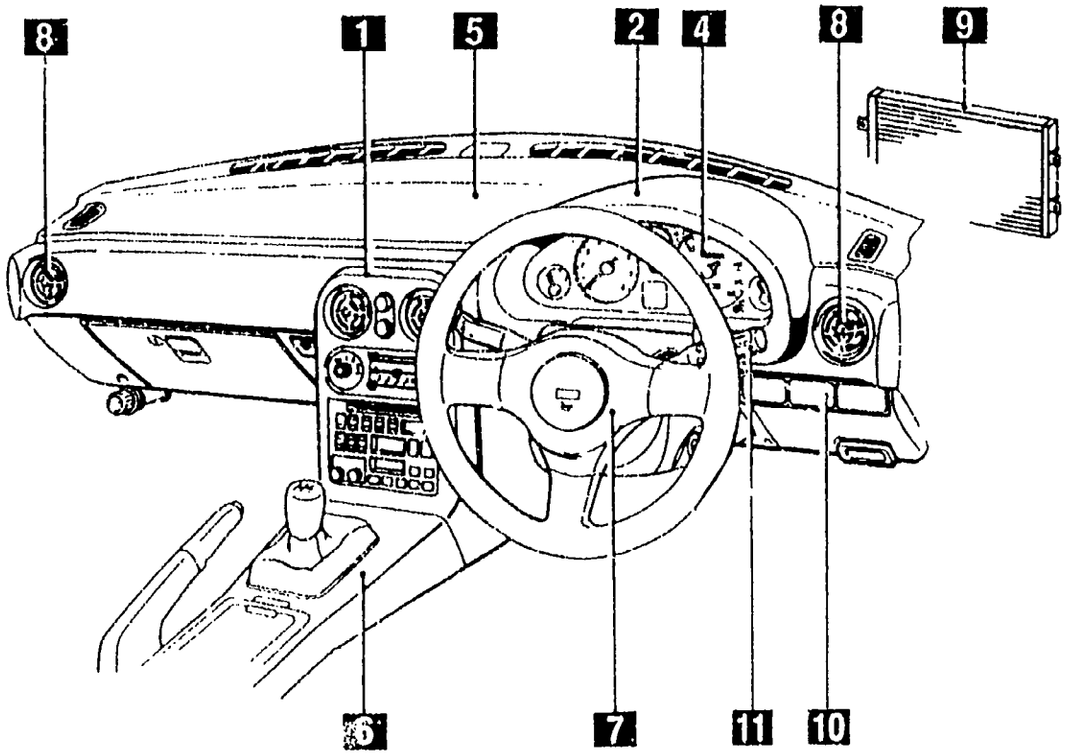

As this illustration is prepared to be applicable to all models, some parts are different in specifications from parts listed in this parts Catalog.

7 5795

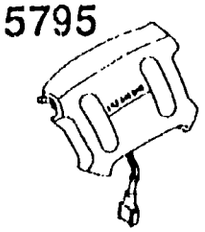

AIR BAG

8

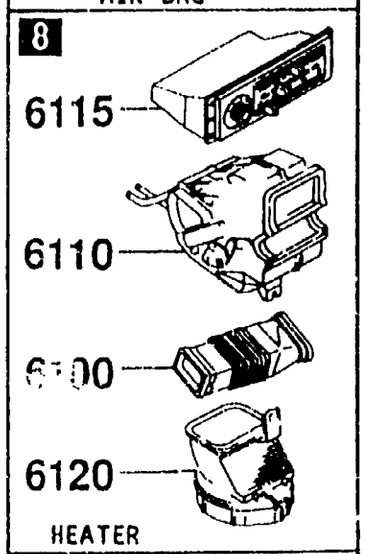

HEATER

9

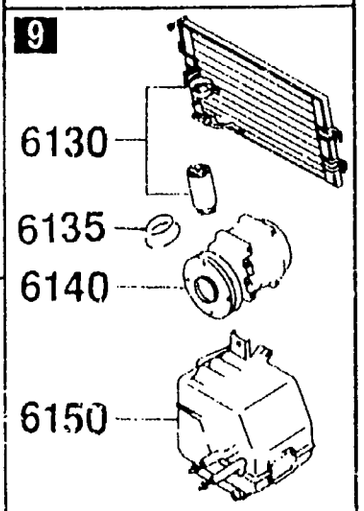

AIR CONDITIONER

11 6611

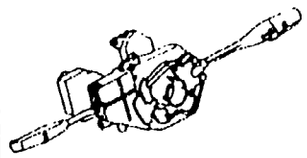

COMBINATION SWITCH

10 6610

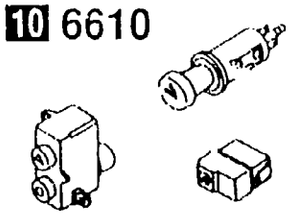

DASHBOARD SWITCHES

PICTORIAL INDEX

1 5580

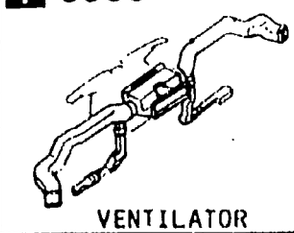

VENTILATOR

2 5700

SEATS

3 5790

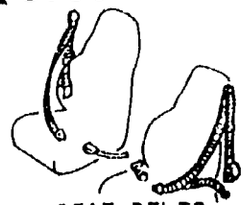

SEAT BELTS

4 6680

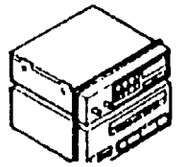

AUDIO SYSTEMS (RADIO & TAPE DECK)

5 6682

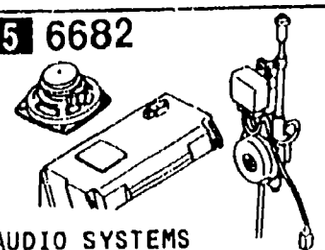

AUDIO SYSTEMS (ANTENNA & SPEAKER)

6 6820

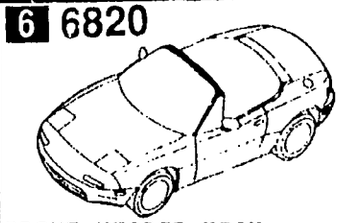

FRONT HEADER TRIM & PILLAR TRIMS

7 6840

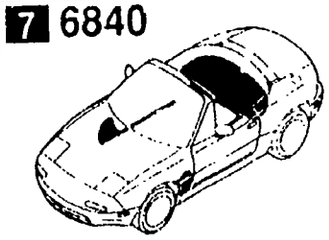

TRIMS & SCUFF PLATES

8 6860

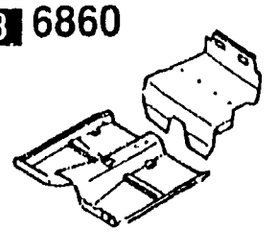

FLOOR MATS & PADS

9 6870

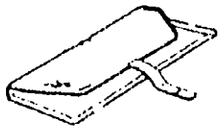

SERVICE TOOLS

10 6900

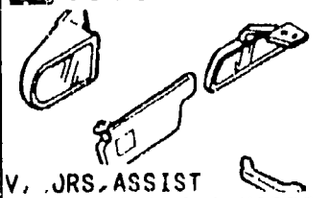

V, .JRS, ASSIST HANDLES & MIRRORS

BODY (4/4)

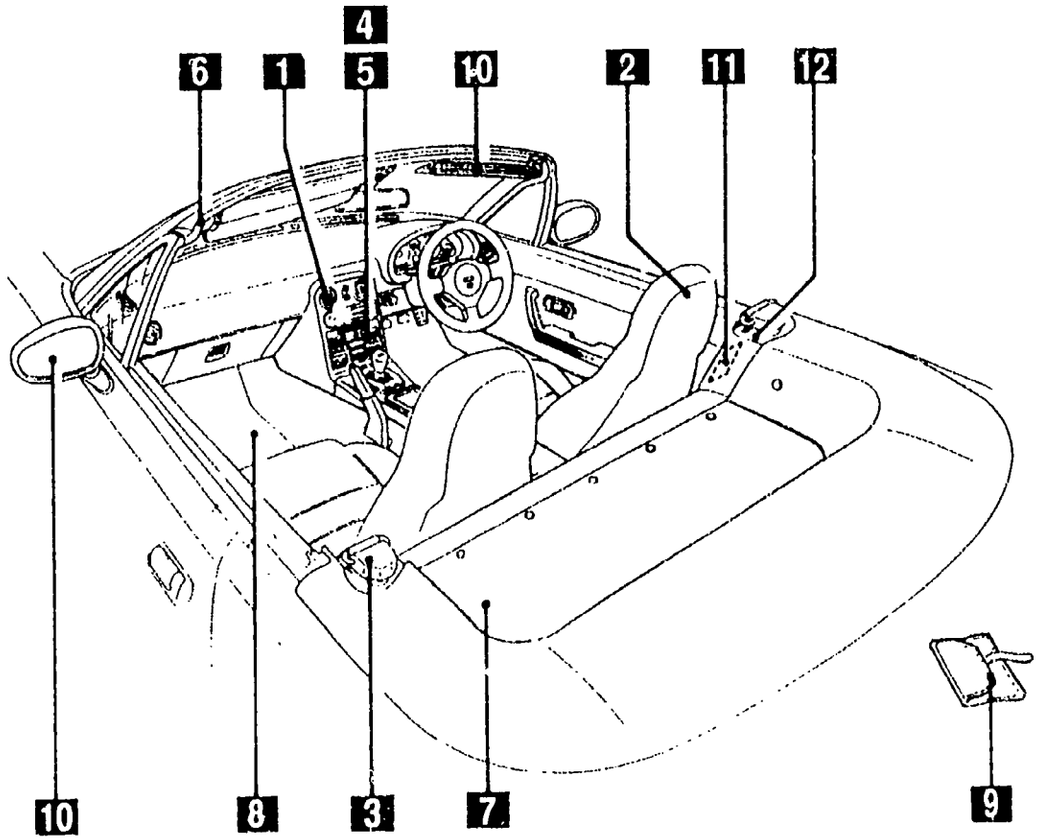

As this illustration is prepared to be applicable to all models, some parts are different in specifications from parts listed in this parts Catalog.

12 7250

QUARTER WINDOW & TRIMS

11 6930

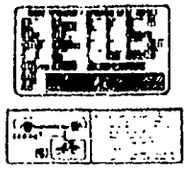

CAUTION PLATES & LABELS

MASTER SECTION NUMBER INDEX

Location No.	Section No	ENGLISH	FRANÇAIS	
1-C3	1000A	ENGINE & GASKET SETS	MOTEUR ET JEU DE JOINTS	
1-E3	1010A	CYLINDER HEAD & COVER	CULASSE ET COUVRE-CULASSE	
1-I3	1030A	CYLINDER BLOCK	BLOC-CYLINDRES	
1-J3	1040A	OIL PAN & TIMING COVER	CARTER D'HUILE ET COUVERCLE DE CHAINE DE DISTRIBUTION	
1-L3	1100A	PISTON, CRANKSHAFT & FLYWHEEL	PISTON, VILEBREQUIN ET VOLANT MOTEUR	
1-C4	1200A	VALVE SYSTEM	SYSTEME DE DISTRIBUTION	
1-F4	1300A	INLET MANIFOLD	COLLECTEUR D'ADMISSION	
1-G4	1310A	EXHAUST MANIFOLD	COLLECTEUR D'ECHAPPEMENT	
1-H4	1320A	FUEL SYSTEM	SYSTEME D'ALIMENTATION	
1-I4	1325A	FUEL DISTRIBUTOR	REPARTITEUR D'HUILE	
1-J4	1330A	AIR CLEANER	FILTRE A AIR	
1-L4	1364A	THROTTLE BODY	CORPS DE PAPILLON	
1-M4	1370A	EMISSION CONTROL SYSTEM (INLET SIDE)	SYSTEME DE CONTROLE DES EMISSIONS (COTE ADM.)	
1-E5	1400A	OIL PUMP & FILTER	POMPE A HUILE ET FILTRE A HUILE	
1-G5	1500A	COOLING SYSTEM	SYSTEME DE REFROIDISSEMENT	
1-K5	1580A	BRACKET, PULLEY & BELT	SUPPORT DE COMPRESSEUR, POULIE ET COURROIE (CLIMATISEUR)	
1-C6	1600A	CLUTCH DISC & COVER (5-SPEED)	DISQUE ET COUVERCLE D'EMBRAYAGE (B.V. MANUELLE) (5-VITESSES)	
1-D6	1600AA	CLUTCH DISC & COVER (6-SPEED)	DISQUE ET COUVERCLE D'EMBRAYAGE (B.V. MANUELLE) (6-VITESSES)	
1-E6	1700A	MANUAL TRANSMISSION CASE (5-SPEED)	CARTER DE BOITE DE VITESSES (MANUELLE) (5-VITESSES)	
1-I6	1700AA	MANUAL TRANSMISSION CASE (6-SPEED)	CARTER DE BOITE DE VITESSES (MANUELLE) (6-VITESSES)	
1-K6	1710A	MANUAL TRANSMISSION GEARS (5-SPEED)	PIGNONS DE BOITE DE VITESSES (MANUELLE) (5-VITESSES)	
1-E7	1710AA	MANUAL TRANSMISSION GEARS (6-SPEED)	PIGNONS DE BOITE DE VITESSES (MANUELLE) (6-VITESSES)	
1-L7	1720A	MANUAL TRANSMISSION CHANGE CONTROL SYSTEM (5-SPEED)	SYSTEME DE COMMANDE DU CHANGEMENT DE VITESSE (MANUELLE) (5 VITESSES)	
1-N7	1720AA	MANUAL TRANSMISSION CHANGE CONTROL SYSTEM (6-SPEED)	SYSTEME DE COMMANDE DU CHANGEMENT DE VITESSE (MANUELLE) (6 VITESSES)	
1-E8	1800A	ENGINE ELECTRICAL SYSTEM	SYSTEME ELECTRIQUE DU MOTEUR	

MASTER SECTION NUMBER INDEX

Location No	Section No	ENGLISH	FRANÇAIS	
1-F8	1830A	ALTERNATOR	ALTERNATEUR	
1-G8	1840A	STARTER	DEMARREUR	
1-I8	1850A	BATTERY	BATTERIE	
1-J8	1910A	AUTOMATIC TRANSMISSION TORQUE CONVERTER, OIL PUMP & PIPINGS	CONVERTISSEUR DE COUPLE, POMPE A HUILE ET TUYAUTERIES (AUTOMATIQUE)	
1-L8	1920A	AUTOMATIC TRANSMISSION CASE & MAIN CONTROL SYSTEM	CARTER DE TRANSMISSION ET SYSTEME PRINCIPAL DE COMMANDE (AUTOMATIQUE)	
1-O9	1925A	AUTOMATIC TRANSMISSION CONTROL VALVE	SOMPAPE DE COMMANDE (AUTOMATIQUE)	
1-D9	1930A	AUTOMATIC TRANSMISSION CLUTCHES & PLANETARY GEARS	EMBRAYAGES ET PIGNONS PLANETAIRES (AUTOMATIQUE)	
1-I9	1940A	AUTOMATIC TRANSMISSION GOVERNOR, LOW & REVERSE PISTON	GOUVERNEUR, PISTON PREMIEREMARCHE AR (AUTOMATIQUE)	
1-K9	1960A	AUTOMATIC TRANSMISSION GASKET & SEAL KIT	KIT DE JOINTS ET JOINTS D'ETANCHEINTE (AUTOMATIQUE)	
1-C11	2505A	REAR PROPELLER SHAFT	ARBRE DE TRANSMISSION AR	
1-D11	2550A	REAR DRIVE SHAFT	DEMI-ARBRES AR	
1-E11	2600A	REAR AXLE	PONT AR	
1-G11	2610A	REAR BRAKE MECHANISMS	MECANISMES DE FREIN AR	
1-J11	2710AA	REAR DIFFERENTIALS (NORMAL DIFF.)	DIFFERENTIELS AR (DIFFERENTIEL NORMAL)	
1-N11	2710AB	REAR DIFFERENTIALS (LIMITED SLIP DIFF.)	DIFFERENTIELS AR (DIFFERENTIEL AUTO-BLOQUANT)	
1-F12	2800A	REAR SUSPENSION MECHANISMS	MECANISMES DE SUSPENSION AP	
1-H12	2810A	REAR STABILIZER	STABILISATEUR AR	
1-I12	2830A	REAR LOWER ARMS & SUB FRAME	BRAS INFERIEURS AR ET FAUX-CADRE	
1-K12	3200A	STEERING WHEEL	VOLANT DE DIRECTION	
1-L12	3210A	STEERING COLUMN & SHAFTS	COLONNE DE DIRECTION ET AXE LONGITUDINAL	
1-M12	3220A	STEERING GEAR	BOITIER DE DIRECTION	
1-F13	3240A	POWER STEERING SYSTEM	SYSTEME DE DIRECTION ASSISTEE	
1-J13	3300A	FRONT AXLE	ESSIEU AV	
1-L13	3310A	FRONT BRAKE MECHANISMS	MECANISMES DE FREINAGE AV	
1-N13	3400A	FRONT SUSPENSION MECHANISMS	MECANISMES DE SUSPENSION AV	
1-F14	3410A	CROSSMEMBER & STABILIZER	TRAVERSE ET STABILISATEUR	
1-F14	3700A	TIRES & JACK	PNEUS ET CRIC	
1-C15	3900A	ENGINE & T.MISSION MOUNTINGS	TASSEAUX DE MOTEUR ET DE BOITE DE VITESSES	

MASTER SECTION NUMBER INDEX

Location No	Section No	ENGLISH	FRANÇAIS	
1-D15	4000A	EXHAUST SYSTEM	SYSTEME D'ECHAPPEMENT	
1-E15	4140A	MANUAL TRANSMISSION CLUTCH RELEASE & MASTER CYLINDERS	CYLINDRE DE DEBRAYAGE ET MAITRE-CYLINDRE D'EMBRAYAGE (BOITE DE VITESSE MANUELLE)	
1-F15	4145A	MANUAL TRANSMISSION CLUTCH PIPINGS	TUYAU D'EMBRAYAGE (MANUELLE)	
1-G15	4160A	ACCELERATOR CONTROL SYSTEM	SYSTEME DE COMMANDE DE L. ACCELERATEUR	
1-H15	4200A	FUEL TANK	RESERVOIR DE CARBURANT	
1-N15	4210A	FUEL LID OPENER	OUVREUR TRAPPE CARBURANT	
1-C16	4300A	MANUAL TRANSMISSION CLUTCH & BRAKE PEDALS	PEDALES D'EMBRAYAGE ET DE FREIN	
1-F16	4300B	AUTOMATIC TRANSMISSION BRAKE PEDAL	PEDALES DE FREIN (AUTOMATIQUE)	
1-H16	4340A	BRAKE MASTER CYLINDER & POWER BRAKE (W/O ANTILOCK BRAKE)	MAITRE-CYLINDRE DE FREIN ET FREIN ASSISTE (SANS SYSTEME D'ANTIBLOC)	
1-J16	4340AA	BRAKE MASTER CYLINDER & POWER BRAKE (W/ANTILOCK BRAKE)	MAITRE-CYLINDRE DE FREIN ET FREIN ASSISTE (AVEC SYSTEME D'ANTIBLOC)	
1-L16	4360A	BRAKE PIPINGS (W/O ANTILOCK BRAKE)	CANALISATIONS DE FREIN (SANS SYSTEME D'ANTIBLOC)	
2-C3	4360AA	BRAKE PIPINGS (W/ANTILOCK BRAKE)	CANALISATIONS DE FREIN (AVEC SYSTEME D'ANTIBLOC)	
2-E3	4370A	ANTILOCK BRAKE SYSTEM	SYSTEM D'ANTIBLOC	
2-F3	4400A	PARKING BRAKE SYSTEM	SYSTEME DE FREIN DE STATIONNEMENT	
2-H3	4500A	FUEL PIPINGS	CANALISATIONS DE CARBURANT	
2-J3	4600A	CHANGE CONTROL SYSTEM (AT)	SYSTEME DE COMMANDE DES VITESSES (BOITE DE VITESSE AUTOMATIQUE)	
2-C5	0900A	KEY SETS	JEUX DE CLES	
2-E5	5000A	FRONT BUMPER	PARE-CHOCS AV	
2-G5	5010A	REAR BUMPER	PARE-CHOCS AR	
2-J5	5030A	WINDOW MOULDING & COWL GRILLES	MOULAGE POUR CADRE DE VITRE & GRILLE DE AUVENT	
2-K5	5040A	BODY MOULDINGS	MOULURES DE CARROSSERIE	
2-L5	5100A	HEAD LAMPS	PHARES	
2-N5	5105A	FRONT COMBINATION LAMPS	FEUX COMBINES AV	
2-C6	5110A	REAR COMBINATION LAMPS	FEUX COMBINES AR	
2-E6	5120A	LICENSE LAMPS	FEUX DE PLAQUE	
2-F6	5125A	INTERIOR LAMPS	PLAFONNIERE	

MASTER SECTION NUMBER INDEX

Location No.	Section No	ENGLISH	FRANÇAIS	
2-G6	5170A	ORNAMENTS	ORNEMENTS	
2-H6	5230A	BONNET	CAPOT	
2-J6	5260A	TRUNK LID	COUVERCLE DE COFFRE À BAGAGES	
2-L6	5310A	FRONT PANELS	PANNEAUX DE CARROSSERIE (AV)	
2-M6	5320A	FENDER & WHEEL APRON PANELS	PANNEAUX DE CARROSSERIE (AILE ET TABLIER D'AILE)	
2-E7	5330A	DASH & COWL PANELS	PANNEAUX DE CARROSSERIE (TABLIER ET PANNEAU D'AUVENT)	
2-F7	5340A	SIDE PANELS	PANNEAUX DE CARROSSERIE (LATERAUX)	
2-K7	5370A	FLOOR PANELS	PANNEAUX DE CARROSSERIE (PLANCHER)	
2-N7	5380A	FLOOR ATTACHMENTS (HOLE COVERS)	ACCESSOIRES DU PLANCHER (TROU COUVERCLE)	
2-D8	5390A	FLOOR ATTACHMENTS	ACCESSOIRES DU PLANCHER	
2-C9	5500A	DASHBOARD EQUIPMENTS	EQUIPEMENTS DU TABLEAU DE BORD	
2-D9	5520A	METER HOOD	VISIERE DE COMPTEURS	
2-E9	5540A	METER COMPONENTS	COMPTEURS	
2-G9	5560A	DASHBOARD & RELATED PARTS	TABLEAU DE BORD ET PIECES CONNEXES	
2-I9	5570A	CONSOLE	CONSOLE	
2-M9	5580A	VENTILATOR	AERATEUR	
2-N9	5700A	SEATS	SIEGES	
2-H10	5790A	SEAT BELTS	CEINTURES DE SECURITE	
2-I10	5795A	AIR BAG	SAC A AIR	
2-J10	5800A	FRONT DOORS	PORTES AV	
2-M10	5830A	FRONT DOOR MECHANISMS	MECANISMES DE PORTES AV	
2-H11	5840A	FRONT DOOR TRIMS & RELATED PARTS	GARNITURES ET PIECES CONNEXES	
2-C12	6100A	HEATER	CHAUFFAGE	
2-D12	6110A	HEATER UNIT COMPONENTS	COMPOSANTS DU CHAUFFAGE	
2-E12	6115A	HEATER CONTROL COMPONENTS	COMPOSANTS DES COMMANDES DE CHAUFFAGE	
2-F12	6120A	HEATER BLOWER COMPONENTS	COMPOSANTS DU VENTILATEUR DE CHAUFFAGE	
2-G12	6130A	AIR CONDITIONER	CLIMATISEUR	
2-K12	6135A	AIR CONDITIONING COOLING PIPE O-RING	JEU JOINTS TORIQUE, TUYAUTERIE	
2-L12	6140A	AIR CONDITIONING COMPRESSOR COMPONENTS	COMPOSANTS DU COMPRESSEUR (CLIMATISEUR)	

MASTER SECTION NUMBER INDEX

Location No	Section No.	ENGLISH	FRANÇAIS	
2-M12	6150A	AIR CONDITIONING COOLING UNIT	UNITE DE REFROIDISSEMENT (CLIMMATISEUR)	
2-N12	6300A	WINDOW GLASSES	VITRES	
2-C13	6330A	SUNROOF	TOIT OUVRANT	
2-D14	6600A	ENGINE SWITCHES & RELAYS	INTERRUPTEURS ET RELAIS (MOTEUR)	
2-H14	6610A	DASHBOARD SWITCHES	INTERRUPTEURS SUR TABLEAU DE BORD	
2-J14	6611A	COMBINATION SWITCH	INTERRUPTEUR COMBINE	
2-K14	6630A	BODY RELAYS & UNIT	RELAIS ET UNITE (CARROSSERIE)	
2-N14	6635A	DOOR SWITCH & HORNS	RUPTEUR PORTE ET AVERTISSEUR	
2-C15	6640A	AUTO CRUISE CONTROL SYSTEM	SYSTEME DE REGLAGE AUTOMATIQUE DE CROISIERE	
2-E15	6680A	AUDIO SYSTEMS (RADIO & TAPE DECK)	SYSTEMES SONORES (RADIO ET LECTEUR DE CASSETTE)	
2-L15	6682A	AUDIO SYSTEMS (ANTENNA & SPEAKER)	SYSTEMES SONORES (ANTENNE ET HAUT-PARLEUR)	
2-C16	6700A	FRONT & REAR WIRING HARNESSES	FAISCEAUX DE FILS (AV ET AR)	
2-F16	6701A	ENGINE & TRANSMISSION WIRING HARNESSES	FAISCEAUX DE FILS (MOTEUR ET BOITE DE VITESSES)	
2-I16	6702A	DASHBOARD WIRING HARNESSES	FAISCEAUX DE FILS (TABLEAU DE BORD)	
2-J16	6703A	DOOR, FLOOR & CEILING WIRING HARNESSES	FAISCEAUX DE FILS (PORTE, PLANCHER ET PLAFOND)	
2-K16	6704A	WIRING HARNESS CLAMPS	COLLIERS DE FAISCEAU DE FILS	
3-C3	6720A	WINDSHIELD WASHER (W/O ANTILOCK BRAKE)	LAVE-GLACE (SANS SYSTEME D'ANTIBLOC)	
3-G3	6720B	WINDSHIELD WASHER (W/ANTILOCK BRAKE)	LAVE-GLACE (AVEC SYSTEME D'ANTIBLOC)	
3-J3	6730A	WINDSHIELD WIPERS	ESSUIE-GLACE	
3-L3	6820A	FRONT HEADER TRIM & PILLAR TRIMS	GARNITURE DE ENTRETOISE AVANT ET GARNITURE DE PILIER	
3-M3	6840A	TRIMS & SCUFF PLATES	GARNITURES ET SEUILS DE PORTE	
3-D4	6860A	FLOOR MATS & PADS	TAPIS ET BOURRELETS DE PLANCHER	
3-G4	6870A	SERVICE TOOLS	OUTILS DE SERVICE	
3-H4	6900A	SUN VISORS, ASSIST HANDLES & MIRRORS	PARE-SOLEIL, POIGNEES DE MAINTIEN ET MIROIRS	
3-K4	6930A	CAUTION PLATES & LABELS	PLAQUETTES ET ETIQUETTES D,AVERTISSEMENT	
3-M4	7250A	QUARTER WINDOW & TRIMS	VITRE ET GARNITURES, CUSTODE AR	

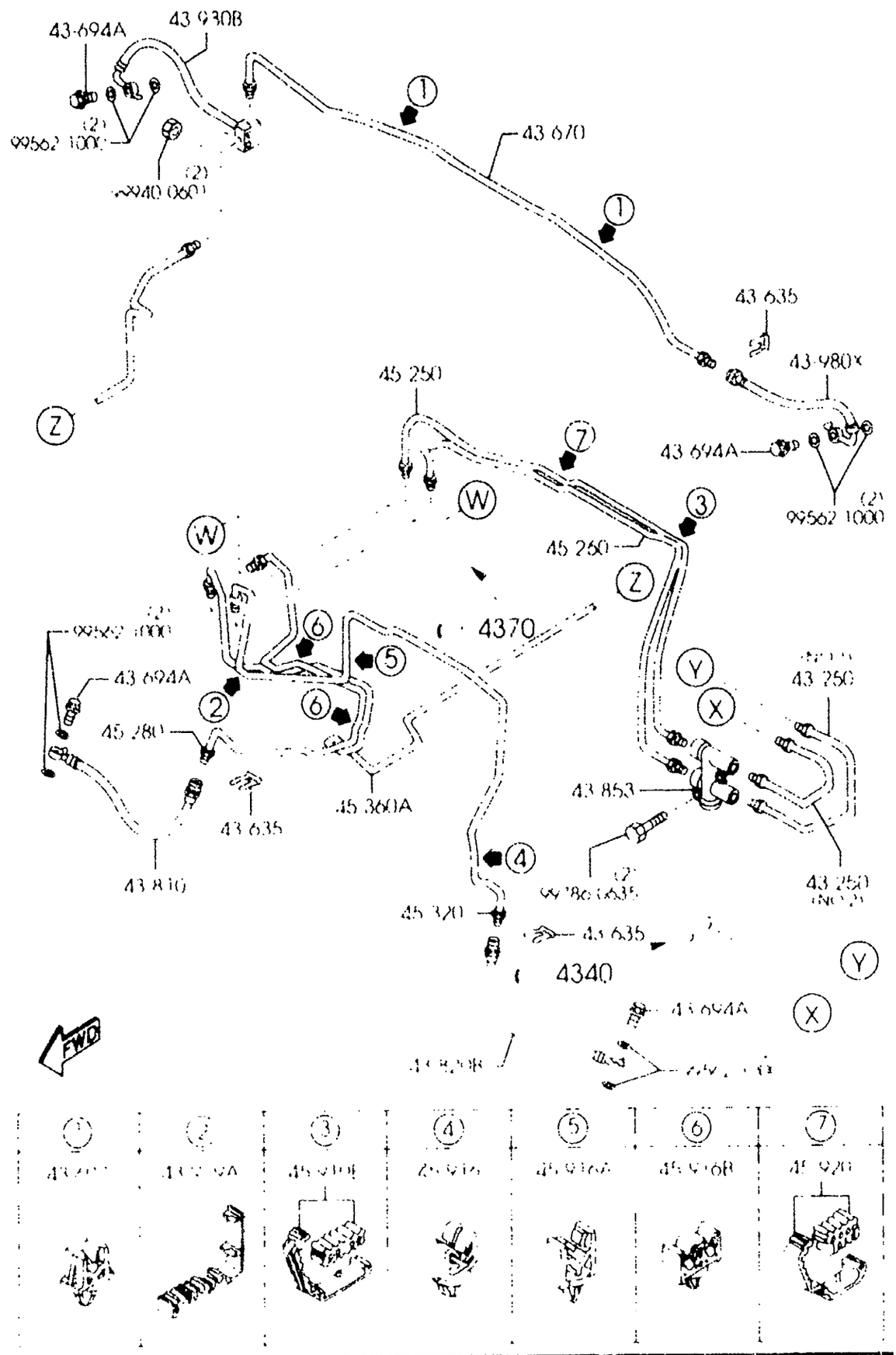

PART NO.	QTY	MODEL/RESTRICTION	MODEL/RESTRICTION	MODEL/RESTRICTION	FROM-TO
43-250		PIPE NO.1,BRAKE-A.B.	TUYAU NO.1,FREIN-A.B		
NC72-43-250A	1	(ILLUST. NO.1)			
NC74-43-250A AN(NC74-43-250B)	1	(ILLUST. NO.2)			-0801
NC74-43-250B	1	(ILLUST. NO.2)			0801-
43-607		CLIP,RR BRAKE PIPE	COLLIER,TUYAU FREIN		
G309-43-607	2				
43-635		CLIP,FLEXIBLE HOSE	ATTACHE, CONDUIT FLE XIBLE		
W023-43-635A	3				
43-670		PIPE,BRAKE-REAR	CONDUIT, FREIN ARRIE RE		
NA01-43-670C	1				
43-694A		BOLT,CONNECTOR	BOULON		
B001-43-694A	4				
43-810		HOSE,FLEXIBLE	DURITE FLEXIBLE		
N067-43-810	1				
43-820B		HOSE,FLEXIBLE	DURITE FLEXIBLE NO 2		
N067-43-820	1				
43-853		JOINT,PIPE	RACCORD		
N069-43-853	1				
43-919A		HOLDER,BRAKE PIPE	SUPPORT,TUYAU FREIN		
NA20-45-915	1				
43-980B		HOSE(R),FLEXIBLE-RR	FLEXIBLE(D),FLEX. AR RIERE		
NA75-43-980A	1				
43-980X		HOSE(L),FLEXIBLE-RR	FLEXIBLE(G),FLEX. AR RIERE		
NA75-43-990A	1				
45-250		PIPE,BRAKE-FRT	CONDUIT, DE FREIN AV ANT		
NC86-45-250	1				
45-260		PIPE NO.2,BRAKE-FRT.	TUYAU NO 2,FREIN AV		
NC86-45-240	1				

0801 NB35**-206344

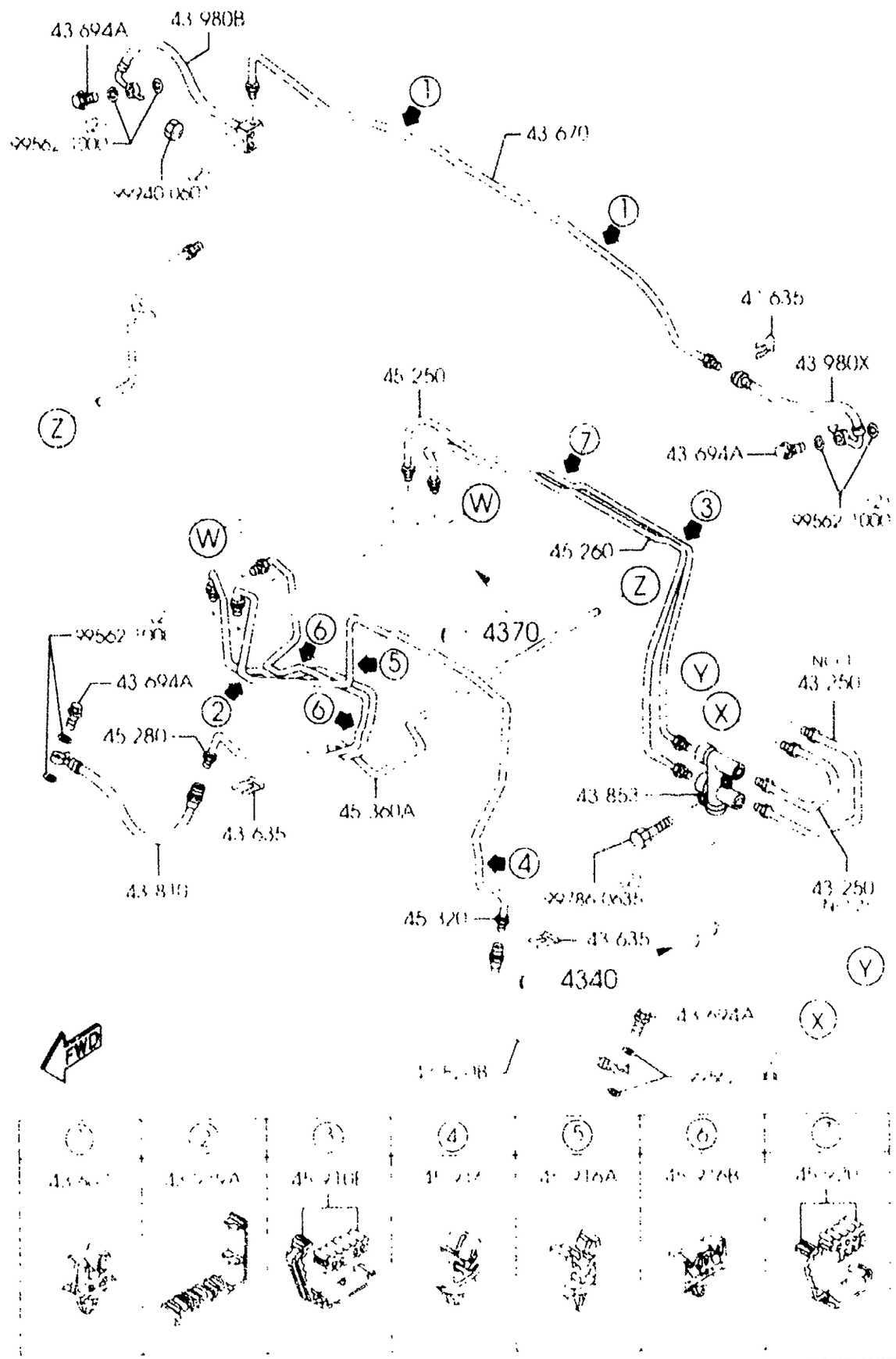

PART NO.	QTY	MODEL/RESTRICTION	MODEL/RESTRICTION	MODEL/RESTRICTION	FROM-TO
45-280 NC78-45-280A	1	PIPE(R),BRAKE-FRONT	CONDUIT (D), FREIN AVANT		
45-320 NC78-45-320	1	PIPE(L),BRAKE-FRONT	CONDUIT (G), FREIN AVANT		
45-360A NC78-45-360A	1	PIPE,BRAKE-REAR	CONDUIT, FREIN ARRIERE		
45-910E NA20-45-910A	1	HOLDER,PIPE	PORTE-TUYAU		
45-916 BC1D-45-916	1	HOLDER,PIPE	SUPPORT,PIPE		
45-916A HG31-45-915	1	HOLDER,PIPE	PORTE,TUYAU		
45-916B HG31-45-916	2	HOLDER,PIPE	PORTE,TUYAU		
45-920 NA20-45-920B	1	BRACKET	SUPPORT		

4370A ANTILOCK BRAKE SYSTEM

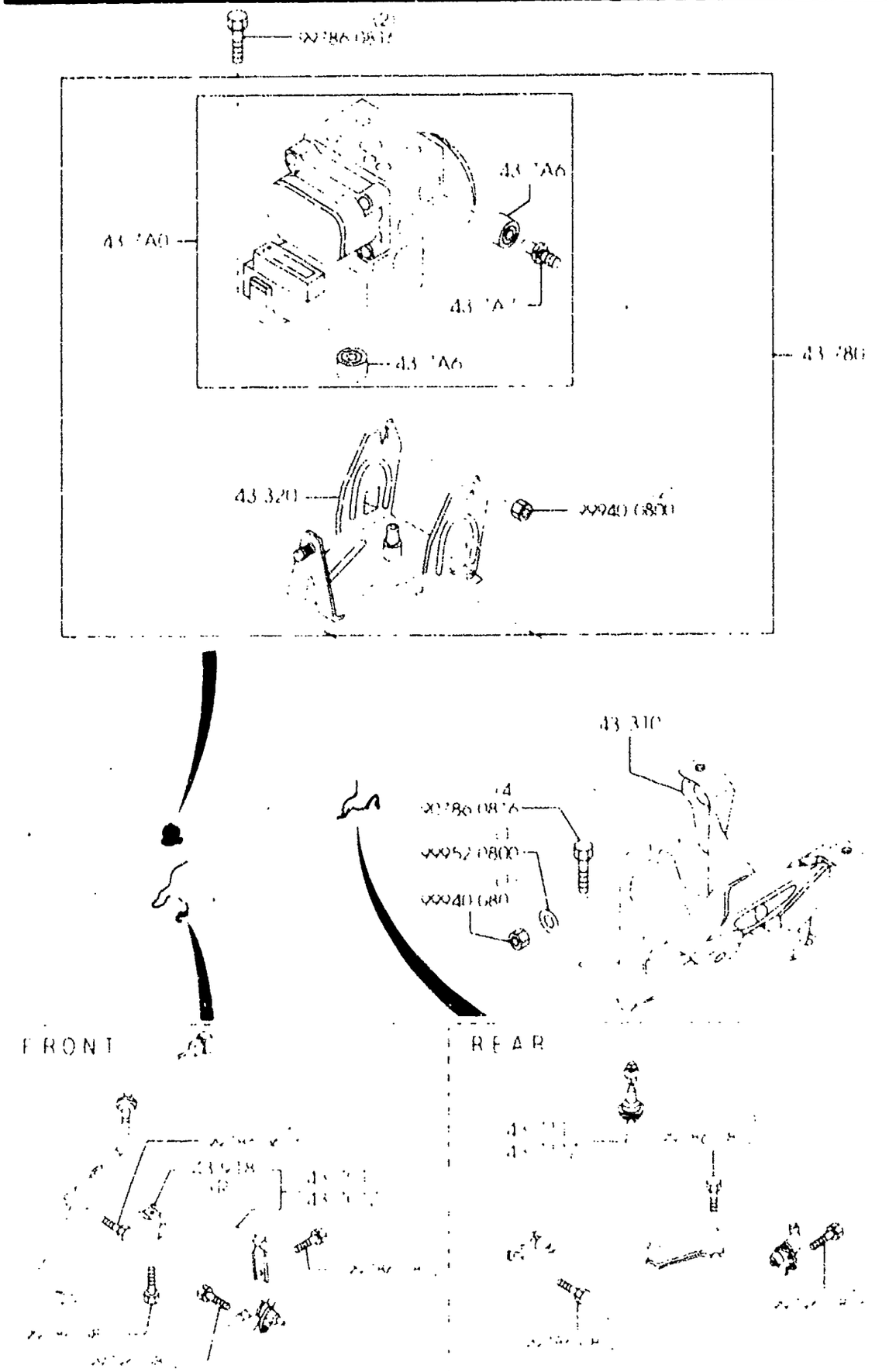

PART NO	QTY	MODEL/RESTRICTION	MODEL/RESTRICTION	MODEL/RESTRICTION	FROM-TO
43-310 NC78-43-310	1	BRACKET NO 1,A.B.S.	SUPPORT NO.1,A.B.S.		
43-320 NC78-43-320	1	BRACKET NO 2,A.B.S.	SUPPORT NO.2,A.B.S.		
43-7A0 N068-43-7A0	1	UNIT,HYDRAULIC-ABS	UNITE HYDRAULIQUE,A.B.C.		
43-7A6 NB86-43-7A6	3	RUBBER,MOUNT-HYD. UNIT	CAOUTCHOUC,MONTAGE-U. HYD		
43-7A7 NB80-43-7A7	2	STUD,HEX-HYD. UNIT	GOUJON FILTE,HEX-U. HYDRA		
43-701 NC14-43-70X	1	SENSOR(R),FRT-A.B.S.	SENSOR(D),AVANT-A.B.S.		
43-701Z NC14-43-73XA	1	SENSOR(L),FRT-A.B.S.	SENSOR(G),AVANT-A.B.S.		
43-711 N068-43-71YB	1	SENSOR(R),RR-A.B.S.	SENSOR(D),D.ARR. A.B.S.		
43-711Z N068-43-72YB	1	SENSOR(L),RR-A.B.S	SENSOR(G),D.AR.-A.B.C.		
43-780 NC78-43-780	1	ANTILOCK BRAKE	FREIN ANTIVERROU.		
43-918 NA23-43-705	1	CLIP,SENSOR HARNESS	ETRIER,HARNAIS CAPTEUR		

4400A PARKING BRAKE SYSTEM

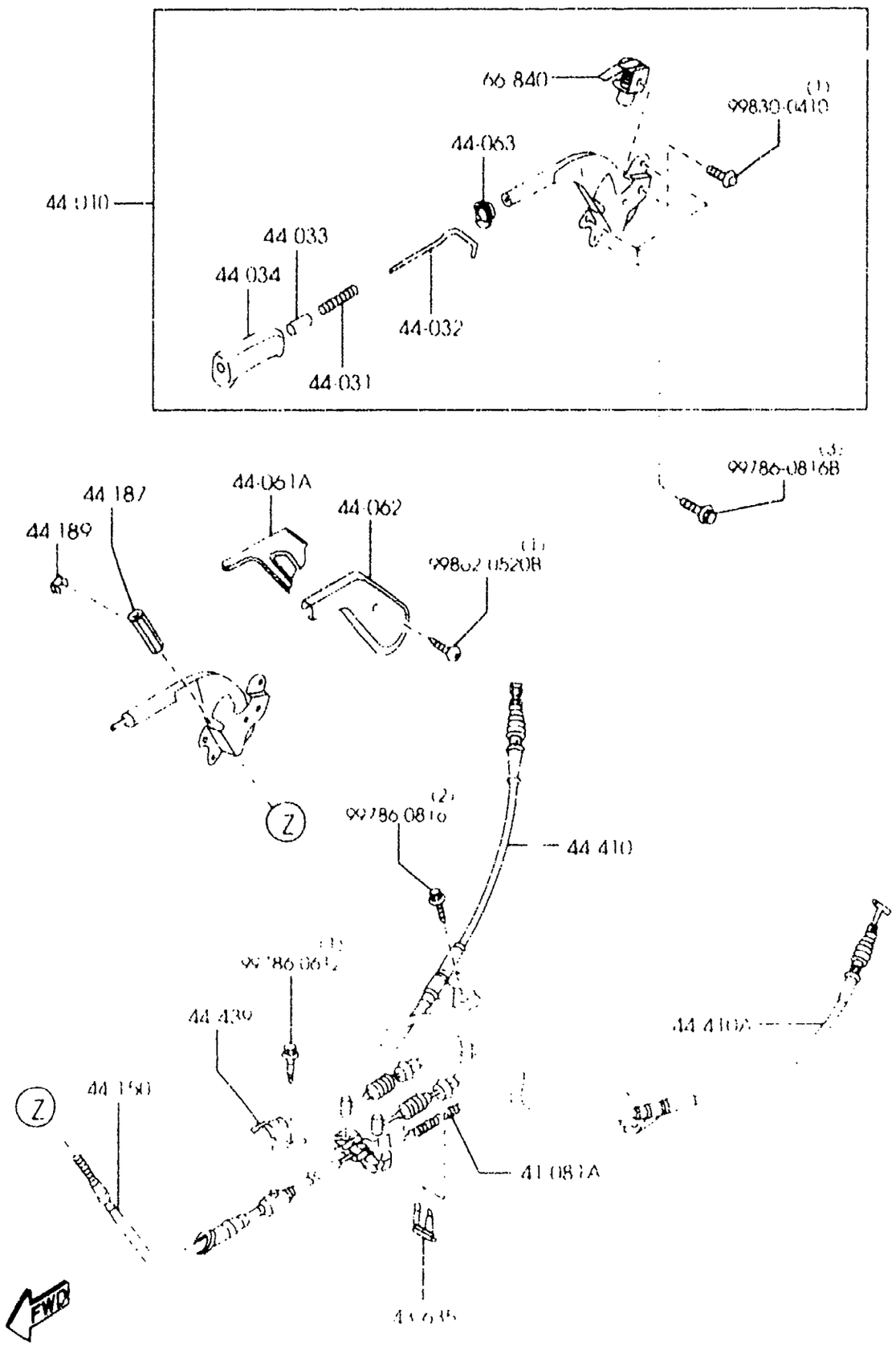

PART NO	QTY	MODEL/RESTRICTION	MODEL/RESTRICTION	MODEL/RESTRICTION	FROM-TO
41-081A		SPRING,RETURN	RESSORT DE RAPPEL		
0750-41-308	1				
43-635		CLIP,FLEXIBLE HOSE	ATTACHE, CONDUIT FLE XIBLE		
W023-43-635A	2				
44-010		LEVER,PARKING BRAKE	LEVIER DE FREIN A MA IN		
NA01-44-010	1	(PVC KNOB)			
NC77-44-010	1	(LEATHER KNOB-'B TYP E')			
N070-44-010B	1	(LEATHER KNOB-'A TYP E')			
NC76-44-010	1	(WOOD KNOB)			1108-
21	INT-	NB4 TAN	NB4 TAN		
44-031		SPRING,PARKING REVER	RESSURT		
G030-44-031	1				
44-032		ROD,RELEASE	TIGE,DECLANCHEMENT		
NA01-44-032	1				
44-033		BUTTON,RELEASE	BOUTON, DECLENCHEUR		
FB01-44-033	1	(PVC KNOB)			
N070-44-033	1	(LEATHER KNOB)			
NC35-44-033	1	(WOOD KNOB)			1108-
44-034		CAP,PARK BRAKE LEVER	BOUCHON		
FB01-44-034	1	(PVC KNOB)			
NC77-44-034	1	(LEATHER KNOB-'B TYP E')			
N070-44-034	1	(LEATHER KNOB-'A TYP E')			
N001-44-034B	1	(WOOD KNOB)			1108-
44-061A		COVER	CACHE		
FB01-44-061C	1	(LEATHER KNOB-'A TYP E') (PVC KNOB)			
NC76-44-061	1	(WOOD KNOB)			1108-
21	INT-	NB4 TAN	NB4 TAN		

1108 NB35**-208709

4400A PARKING BRAKE SYSTEM

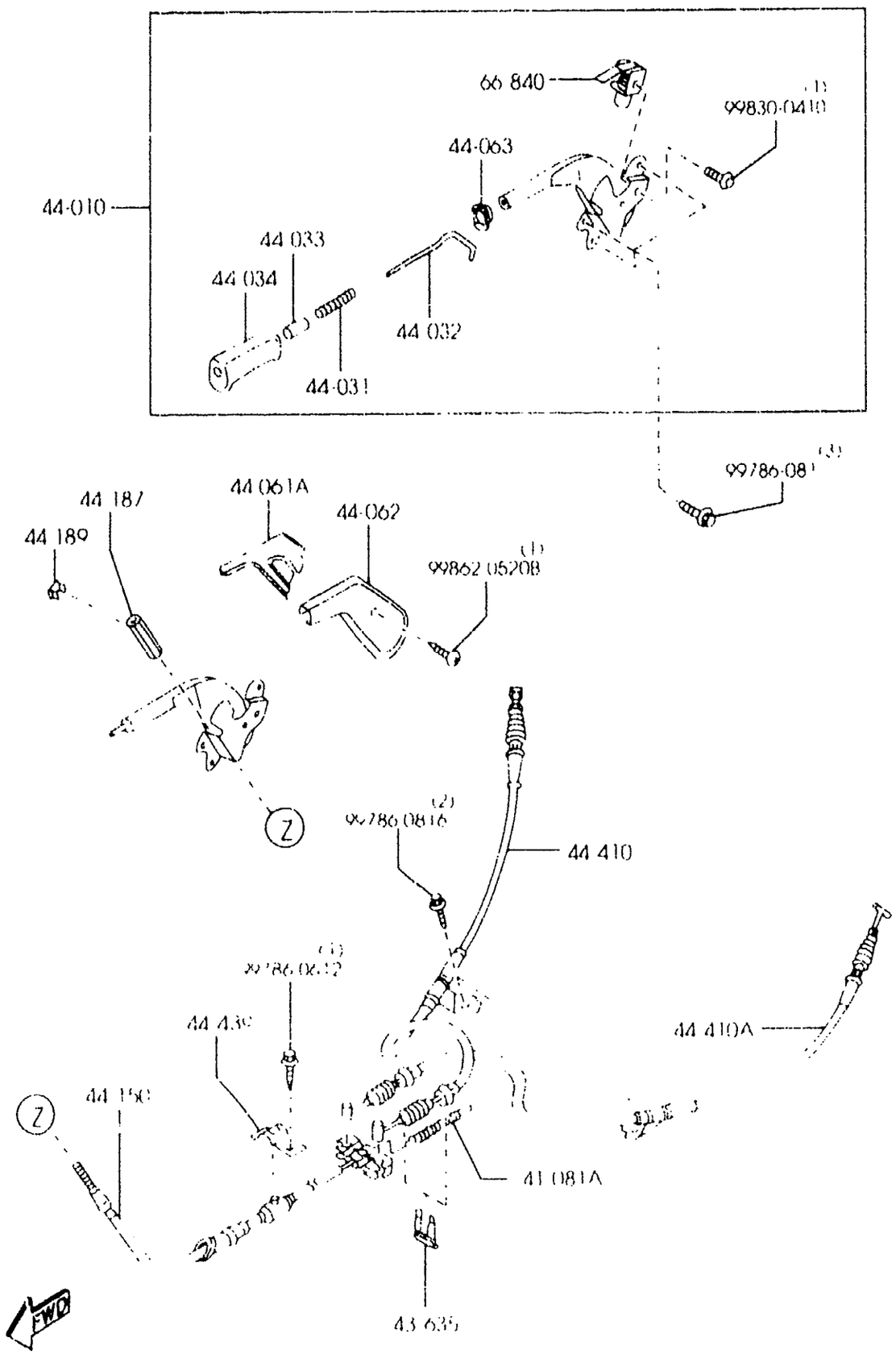

PART NO.	QTY	MODEL/RESTRICTION	MODEL/RESTRICTION	MODEL/RESTRICTION	FROM-TO
44-062		COVER	CACHE		
FB01-44-062B	1	(LEATHER KNOB-'A TYPE') (PVC KNOB)			
NC76-44-062	1	(WOOD KNOB)			1108-
21	INT-	NB4 TAN	NB4 TAN		
44-063		SPACER	RONDELLE		
FC01-44-063A	1	(LEATHER KNOB) (PVC KNOB)			
NC76-44-063	1	(WOOD KNOB)			1108-
21	INT-	NB4 TAN	NB4 TAN		
44-150		CABLE,PARKING-FRT	CABLE, AV		
NA01-44-150D	1				
44-187		SCREW,ADJUST	VIS		
0866-44-187A	1				
44 189		CLIP	ATTACHE		
0866-44-189	1				
44-410		CABLE(R),R.-PARK.	CABLE, ARRIERE		
NC10-44-410A	1				
44-410A		CABLE(L),R.-PARK.	CABLE FREIN A MAIN(G)		
NC10-44-420A	1				
44-439		CLIP,CABLE	ATTACHE, CABLE		
1011-44-439	1				
66-840		SWITCH,PARKING LAMP	INTE., TEMOIN FREIN A MAIN		
GJ21-66-450A	1				

1108 NB35**-208709

4500A FUEL PIPINGS

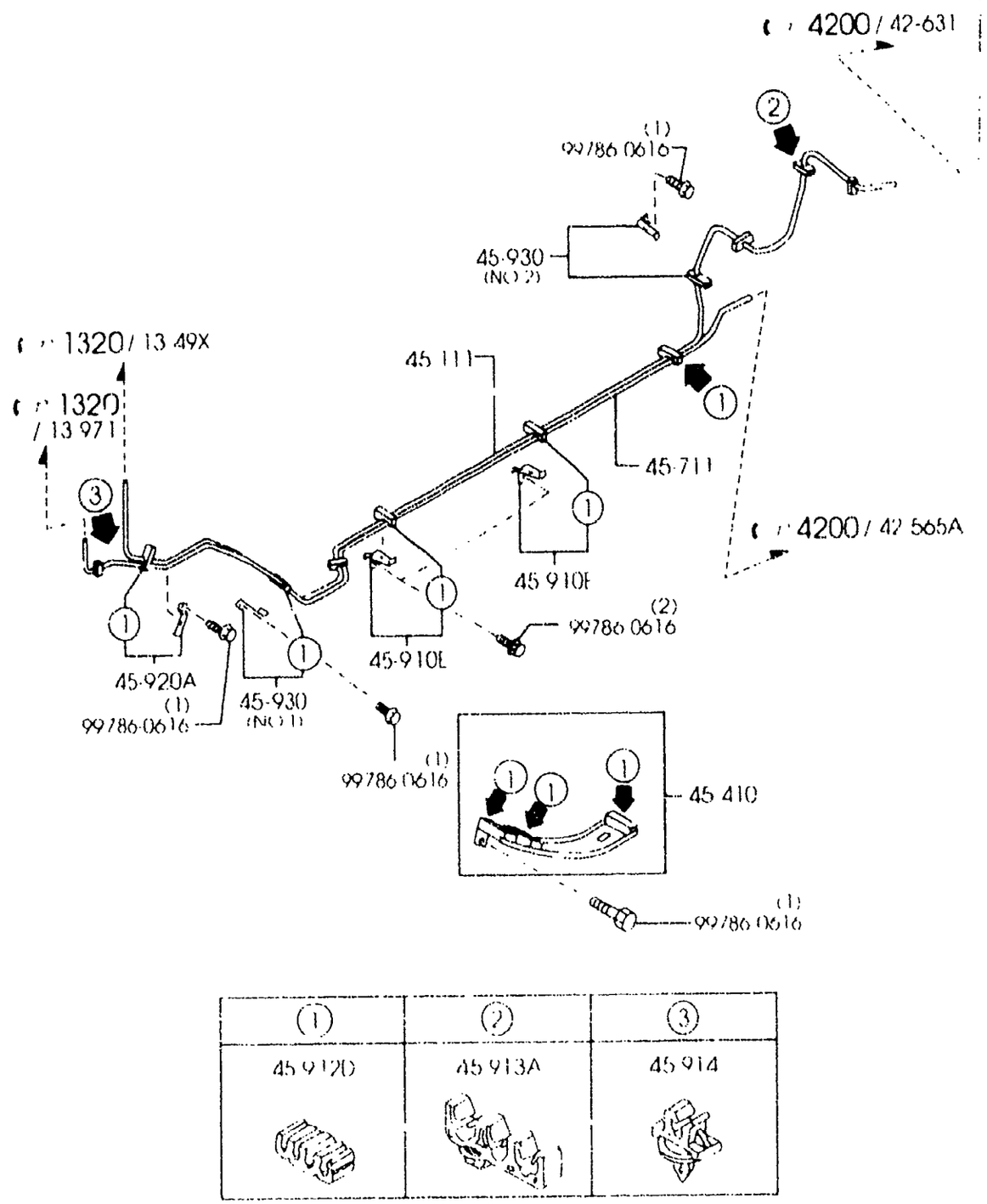

①	②	③
45 912D	45 913A	45 914

PART NO.	QTY	MODEL/RESTRICTION	MODEL/RESTRICTION	MODEL/RESTRICTION	FROM-TO
45-111		PIPE,FUEL-MAIN	CONDUIT, ESSENCE		
NC10-45-111B	1				
45-410		PROTECTOR,PIPE	PROTECTEUR,TUYAU		
N067-45-410A	1				
45-711		PIPE,EVAPORATION	CONDUIT, EVAPORATION		
NC49-45-711	1				
45-910E		HOLDER,PIPE	PORTE-TUYAU		
H266-45-910A	2				
45-912D		HOLDER,PIPE	ATTACHE'A',TUY.-FREIN		
H266-45-912	8				
45-913A		CLIP,PIPE	ATTACHE		
NA01-45-913B	1				
45-914		HOLDER,PIPE	SUPPORT,PIPE		
FB01-45-914	1	NIFUKO	NIFUKO		
45-920A		HOLDER'B',PIPE	ATTACHE'B',TUY		
H266-45-920A	1				
45-930		HOLDER'C',PIPE	ATTACHE'C',TUY		
H266-45-930A	1	(ILLUST. NO.1)			
NC10-45-930	1	(ILLUST. NO.2)			

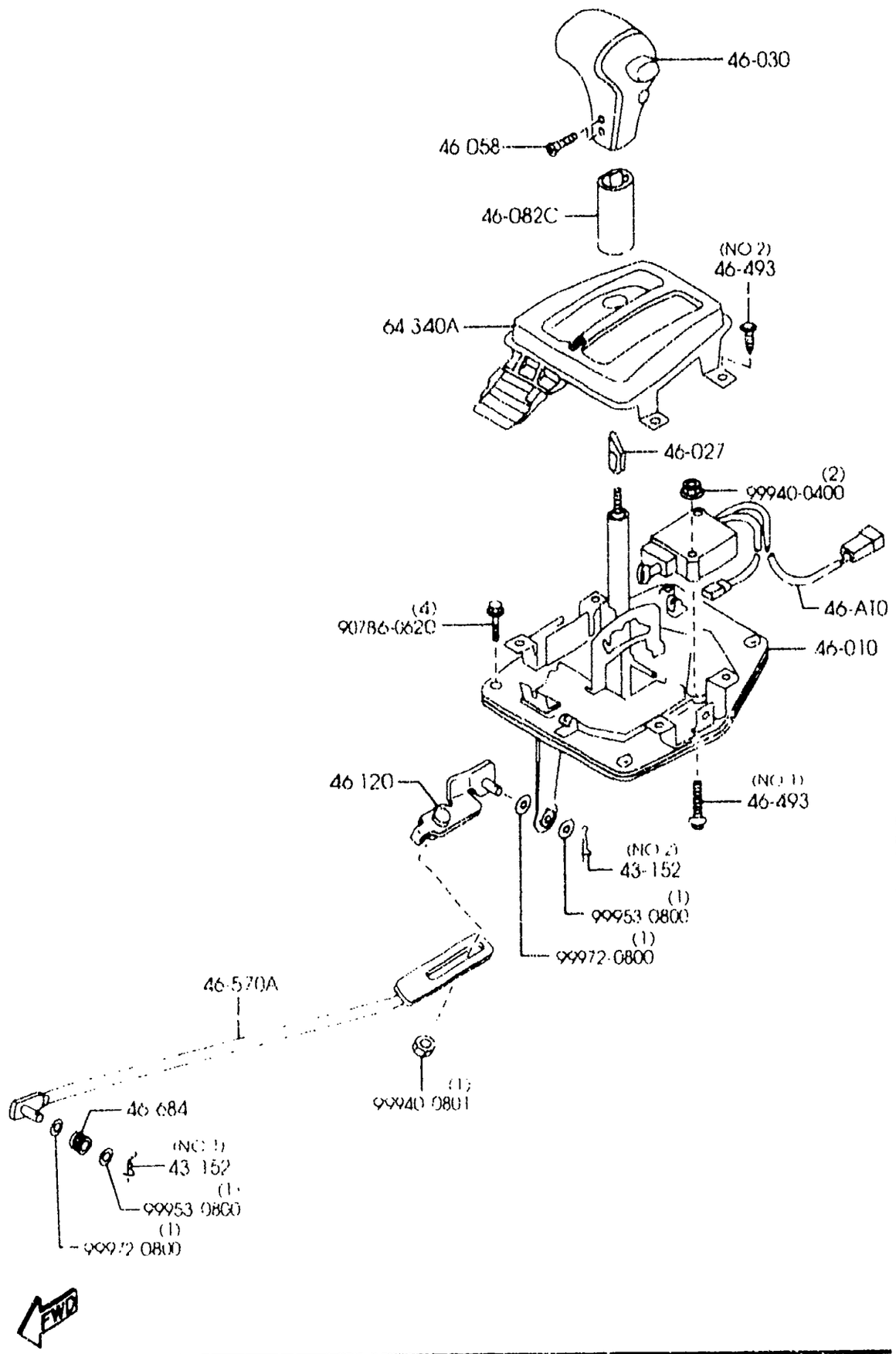

AUNA08

1N04490

4600A -1 CHANGE CONTROL SYSTEM (AT)

PART NO.	QTY	MODEL/RESTRICTION	MODEL/RESTRICTION	MODEL/RESTRICTION	FROM-TO
43-152		PIN,SNAP	AXE D'ARRET		
D001-43-152	1	(ILLUST. NO.1)			
FB02-43-152A	1	(ILLUST. NO.2)			
46-AT0		ACTUATOR,SHIFT LOCK	ACTUATOR,VERROU ARBR E		
NC13-46-AT0C	1				
46-010		LEVER,SELECT	LEVIER SELECTEUR		
NC13-46-100D	1				
46-027		CAM,CHANGE LEVER	CAME,LEVIER VITESSE		
H338-46-027	1				
46-030		KNOB,CHANGE LEVER	BOULE DE LEVIER DE V ITESSE		
NC13-46-030A	1	(URETHANE KNOB)			
NC38-46-030	1	(LEATHER KNOB-'D TYP E')			
NC81-46-030B	1	(LEATHER KNOB-'B TYP E')			
46-058		SCREW,CHANGE LEVER K NOB	VIS,BOUTON LEVIER CH ANGE.		
FB02-46-058C	2				
46-082C		COVER,SELECT LEVER	COUVERCLE,LEVIER SEL ECTE.		
NC13-46-083	1				
46-120		BRACKET,INDICATOR	SUPPORT,INDICATEUR		
NC13-46-120A	1				
46-493		SCREW	VIS		
0517-46-116	2	(ILLUST. NO.1)			
0517-46-117	4	(ILLUST. NO.2)			
46-570A		ROD,SELECTOR-REAR	TIGE DE SELECTION AR		
NC13-46-570B	1				
46-684		BUSH	BUSELURE		
1015-46-684A	1				
64-340A		INDICATOR	INDICATEUR		
NC77-64-350A	1				-0822

0822 NB35XX-201988

CAT. AUNA08-04

2001-12

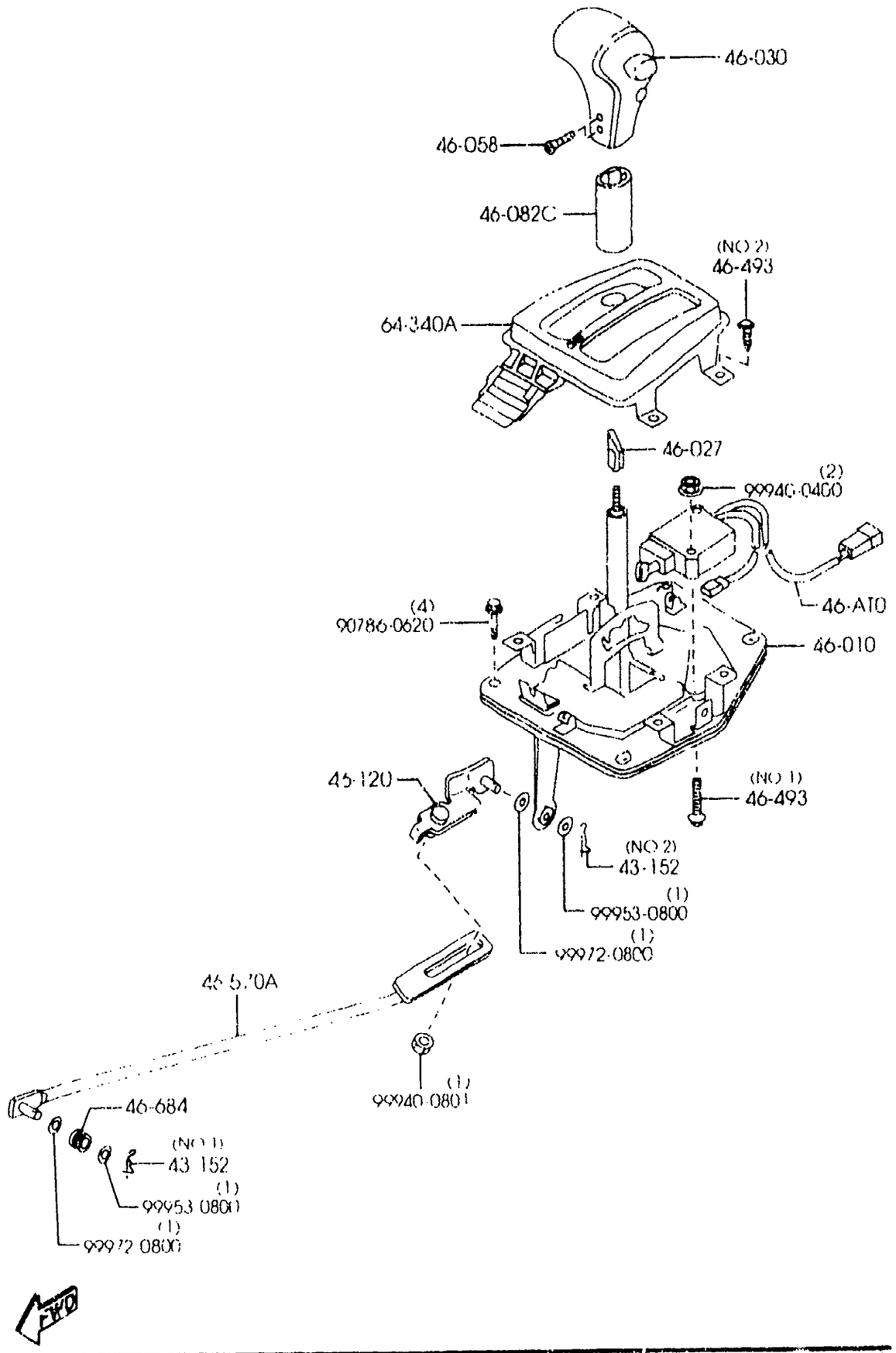

PART NO.	QTY	MODEL/RESTRICTION	MODEL/RESTRICTION	MODEL/RESTRICTION	FROM-TO
CONT'D					
A (NC77-64-350B)					
NC77-64-350B	1				0822-

0822 NB35**-201988

CHASSIS

BODY

CHASSIS

BODY

CHASSIS

BODY

CHASSIS

BODY

CHASSIS

BODY

CHASSIS

BODY

CHASSIS

BODY

CHASSIS

BODY

CHASSIS

BODY

CHASSIS

BODY

CHASSIS

BODY

CHASSIS

BODY

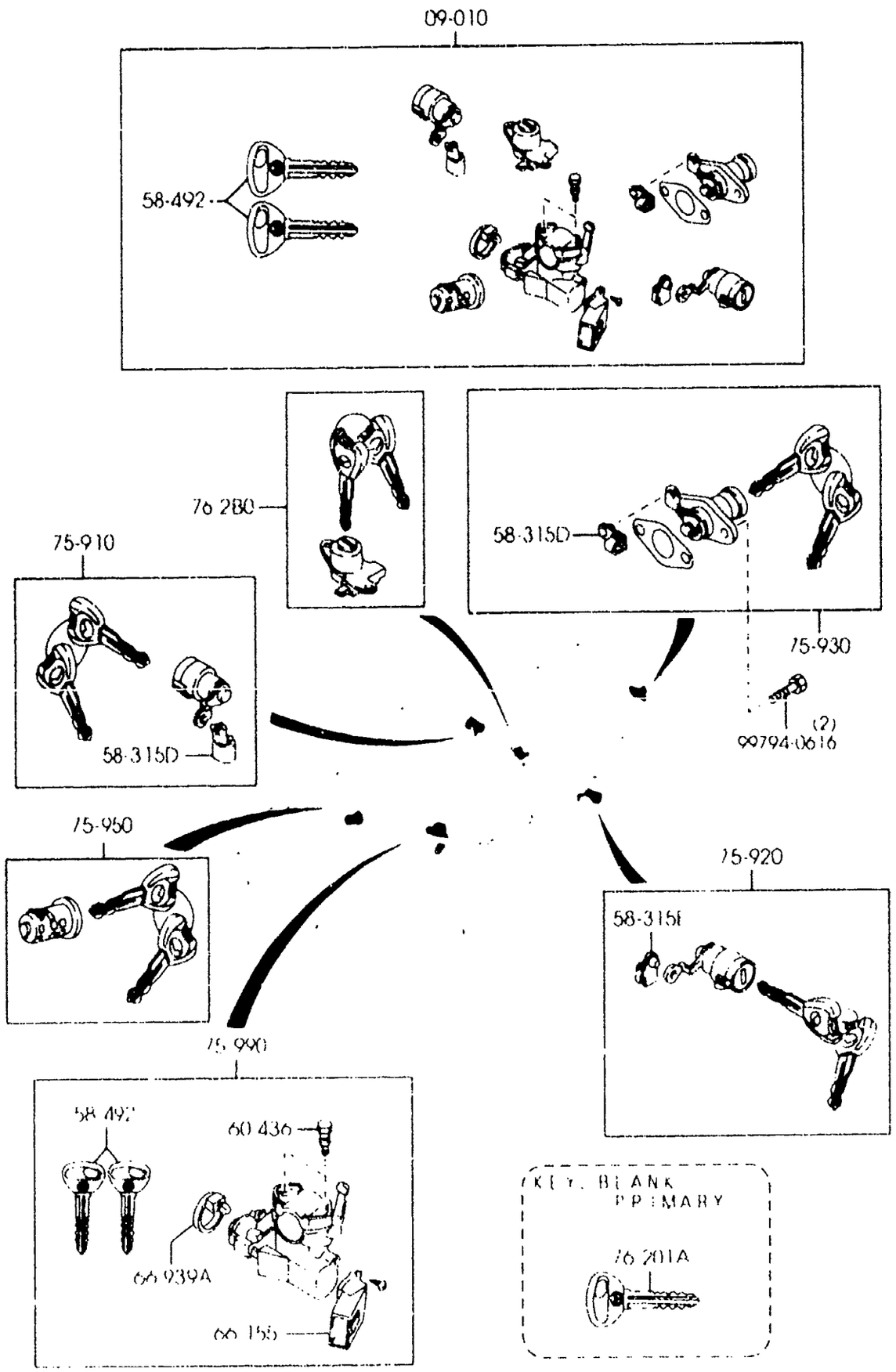

PART. NO.	QTY	MODEL/RESTRICTION	MODEL/RESTRICTION	MODEL/RESTRICTION	FROM-TO
09-010		KEY SET	JEU DE BARILLET		
NC73-09-010A	1	(W/O POWER DOOR LOCK) (MT)	(B.V.MANU)		
NC72-09-010C A (NC72-09-010D)	1	(W/POWER DOOR LOCK) (MT)	(B.V.MANU)		-0807
NC77-09-010C A (NC77-09-010D)	1	(AT)	(B.V.AUTOM)		-0807
NC72-09-010D	1	(W/POWER DOOR LOCK) (MT)	(B.V.MANU)		0807-
NC77-09-010D	1	(AT)	(B.V.AUTOM)		0807-
58-315D		CLIP (R)	CLIP		
G030-58-315	2				
58-315E		CLIP (L)	CLIP		
G030-59-315	1				
58-492		KEY,PRIMARY	CLEF, PRIMAIRE		
BJ1V-58-2GX	2	KEY NO. IS REQUIRED	KEY NO. IS REQUIRED		
60-436		BOLT,SET	BOULON,JEU		
H043-66-154	2				
66-155		SWITCH,IGNITION	CONTACT D'ALLUMAGE		
N053-66-151	1				
66-939A		COIL,ANTENNA-IMMOVI	BOBINE,ANTENNE-IMMOBILIS.		
GG2A-66-938	1	(MT)	(B.V.MANU)		
GG2C-66-938	1	(AT)	(B.V.AUTOM)		
75-910		KEY SUB SET(R),DOOR	JEU DE BARILLET (D), PORTE		
NCY0-76-210B	1	(W/O POWER DOOR LOCK) (MT)	(B.V.MANU)		
NCY3-76-210A A (NCY3-76-210B)	1	(W/POWER DOOR LOCK) (MT)	(B.V.MANU)		-0807
NCY3-76-210A A (NCY3-76-210B)	1	(AT)	(B.V.AUTOM)		-0807
NCY3-76-210B	1	(W/POWER DOOR LOCK) (MT)	(B.V.MANU)		0807-
NCY3-76-210B	1	(AT)	(B.V.AUTOM)		0807-

0807 NB35**-201234

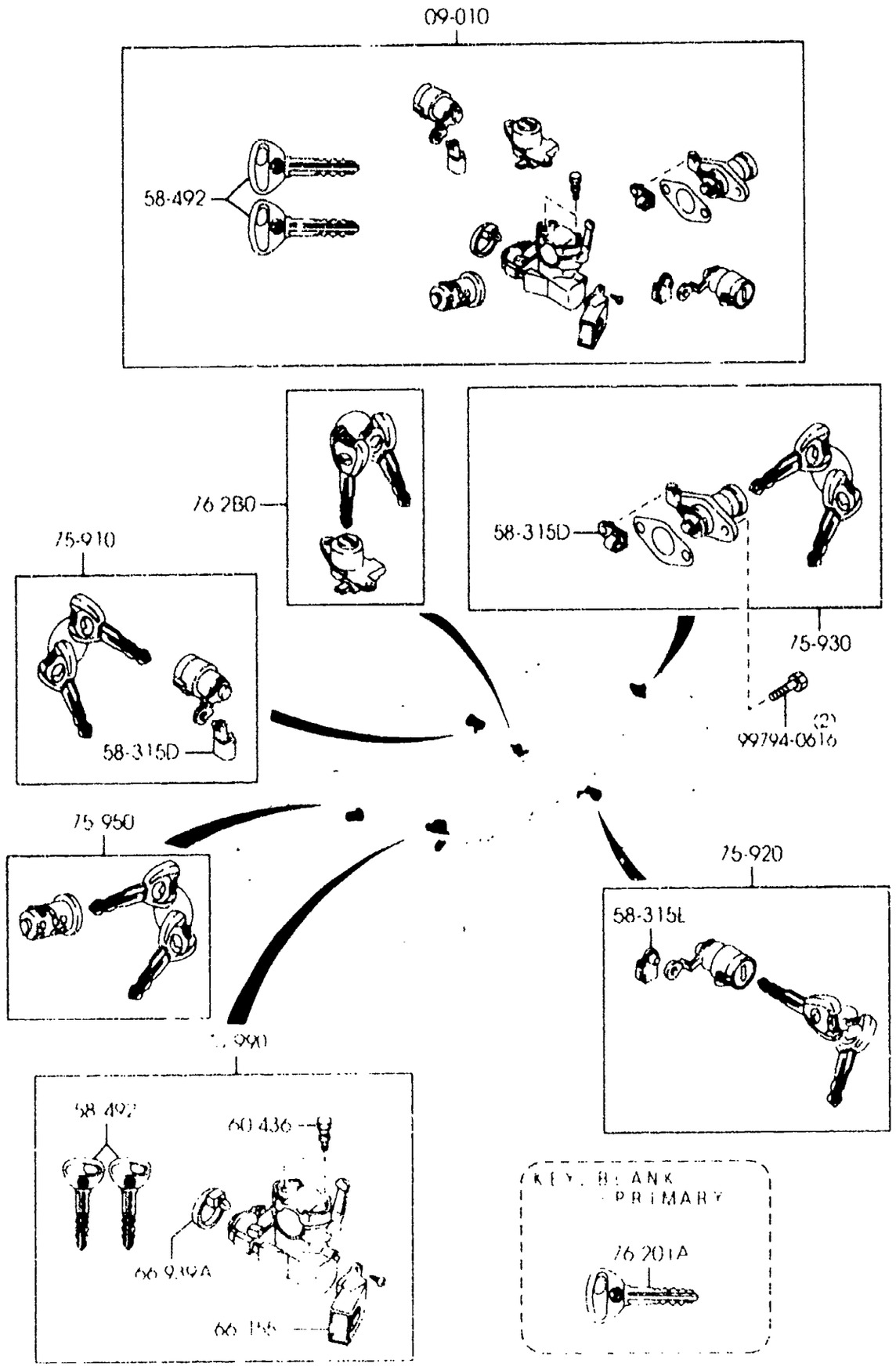

PART NO.	QTY	MODEL/RESTRICTION	MODEL/RESTRICTION	MODEL/RESTRICTION	FROM-TO
75-920		KEY SUB SET(L),DOOR	JEU DE BARILLET (G), PORTE		
NCY0-76-220B	1	(W/O POWER DOOR LOCK) (MT)	(B.V.MANU)		
NCY3-76-220A A (NCY3-76-220B)	1	(W/POWER DOOR LOCK) (MT)	(B.V.MANU)		-0807
NCY3-76-220A A (NCY3-76-220B)	1	(AT)	(B.V.AUTOM)		-0807
NCY3-76-220B	1	(W/POWER DOOR LOCK) (MT)	(B.V.MANU)		0807-
NCY3-76-220B	1	(AT)	(B.V.AUTOM)		0807-
75-930		KEY SUB SET,TRUNK	JEU DE BARILLET, COFFRE		
NCY0-76-230A	1				
75-950		KEY SUB SET,GLOVE	JEU DE BARILLET, BOITE A GANTS		
BG1N-76-250B	1				
75-990		KEY SUB SET,ST. LOCK	SOUS-JEU,		
NCY3-76-29X	1	(MT)	(B.V.MANU)		
NCY6-76-29X	1	(AT)	(B.V.AUTOM)		
76-2B0		KEY SUB SET,CONSOLE	JEU SOUS CLE,CONSOLE		
NCY0-76-2B0	1				
76-201A		KEY,BLANK-PRIMARY	CLE,PLEIN-PRIMAIRE		
BJYV-76-2GX	1				

0807 NB35**-201234

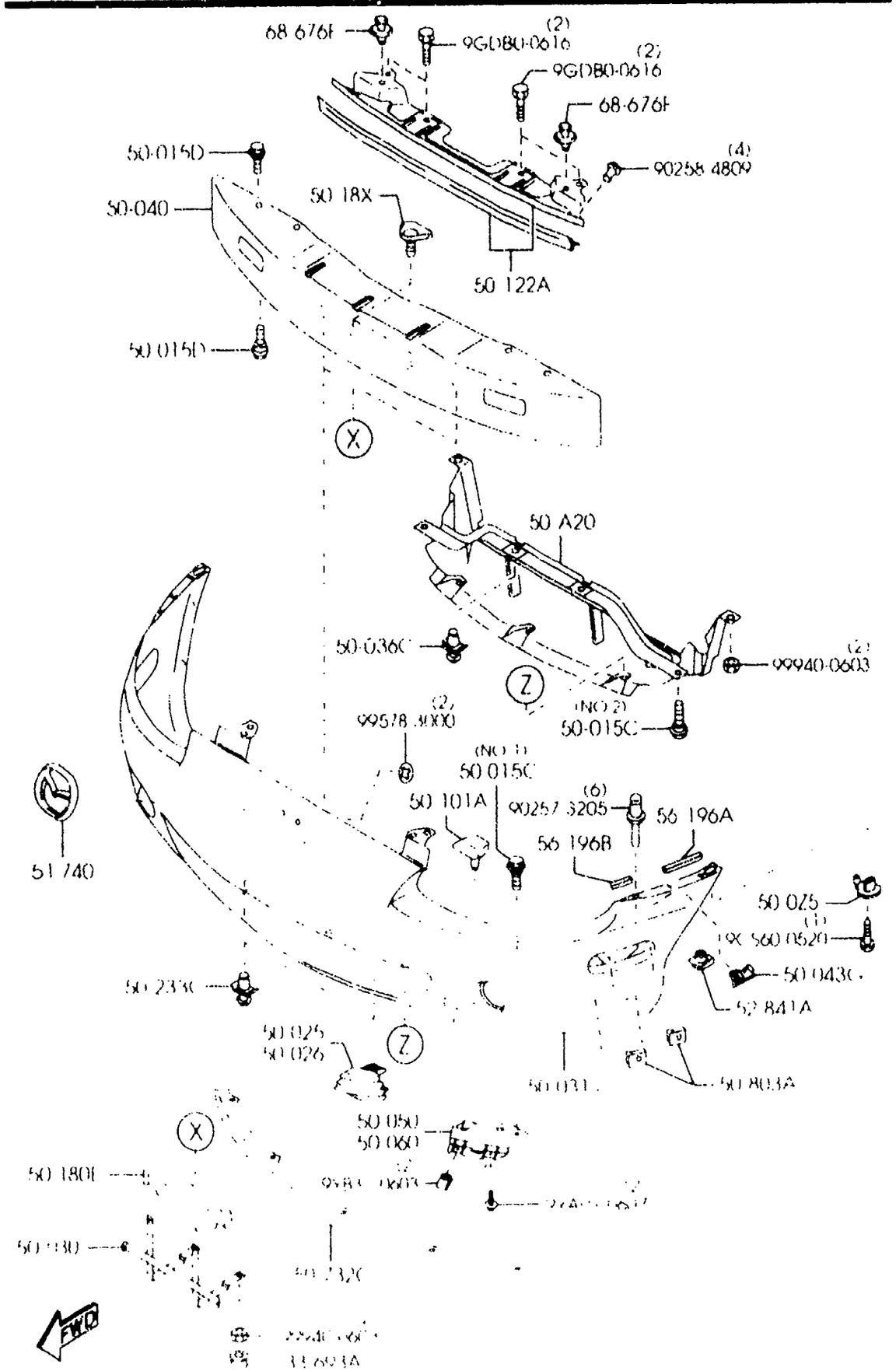

AUNA08

1N08610

5000A -' FRONT BUMPER

PART NO.	QTY	MODEL/RESTRICTION	MODEL/RESTRICTION	MODEL/RESTRICTION	FROM-TO
33-693A 0259-33-693	2	CAP,BLEEDER SCREW	BOUCHON PURGEUR		
50-A20 NC10-50-A21A	1	GUIDE,AIR	GUIDE,AIR		
50-0Z5 N066-50-0Z5	2	GROMMET,SCREW	PROTECTEUR,VIS		
50-015C BR70-50-0Z2	5	BOLT (ILLUST. NO.1)	BOULON		
FB01-50-132	2	(ILLUST. NO.2)			
50-015D NA01-50-0Z2	8	BOLT	BOULON		
50-025 N066-50-C11A	1	COVER(R),LAMP (W/O FRONT FOG LAMP)	COUVERCLE LAMPE(D)		
50-026 N066-50-C21A	1	COVER(L),LAMP (W/O FRONT FOG LAMP)	COUVERCLE LAMPE(G)		
50-030 NA01-50-180A	1	HOLDER,LICENSE PLATE	SUPPORT PLAQUE		
50-031J N0Y1-50-031A	1	BUMPER,FRONT PAINT TO MATCH	AMORTISSEUR,AVANT PAINT TO MATCH		
50-036C BF67-50-03	2	FASTENER	AGRAFFE		
50-040 N066-50-071	1	REINF,BUMPER-FRONT	RENFORT,PARE-CHOCS		
50-043G N066-50-E13A	2	SLIDE,FRONT BUMPER	COULISSE,PARE-CHOC F RONT		
50-050 N066-50-121	1	GUARD(R),BUMPER	GARDE(D),PARE-CHOCS		

5000A FRONT BUMPER

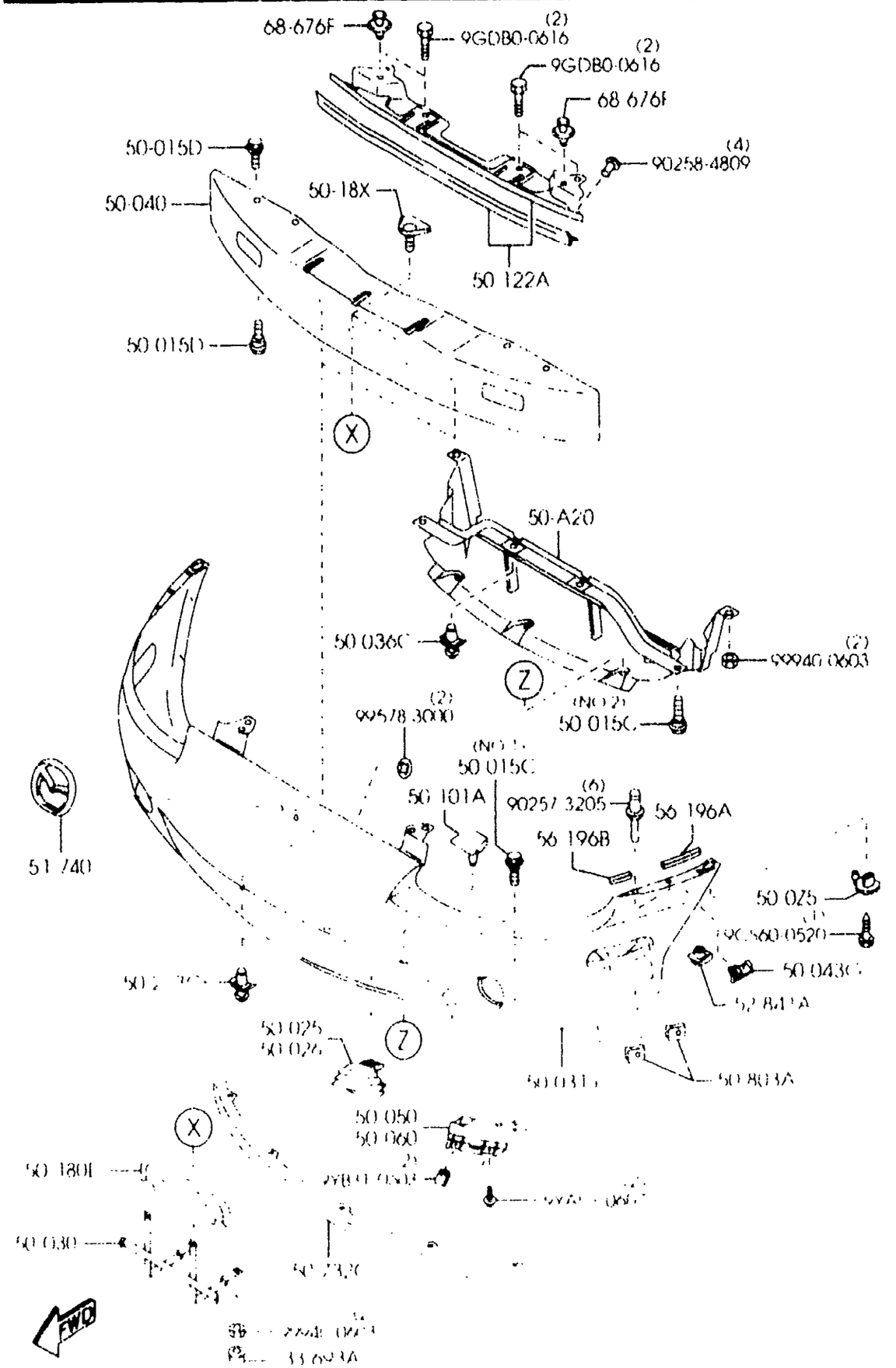

AUNA08 NO8610

PART NO	QTY	MODEL/RESTRICTION	MODEL/RESTRICTION	MODEL/RESTRICTION	FROM-TO
50-060		GUARD(L),BUMPER	GARDE(G),PARE-CHOCS		
N066-50-131	1				
50-101A		COVER,GRILLE	COUVERCLE,GRILLE		
NA01-50-101A	3				
50-122A		RETAINER,FRT.BUMPER	ARRETOIR,PAPE-CHOCS AV		
N066-50-0K0A	1				
50-18X		BRACKET,LICENCE PLATE	SUPPORT,PLAQUE IMMATRICL.		
NA01-50-18X	2				
50-180E		PROTECTOR,NO. PLATE	PROTECTEUR,		
FB01-50-144	1				
50-233C		FASTENER,REAR BUMPER	FERMETURE,PARE-CHOCS AR		
BF82-50-233	2				
50-732C		SKIRT,FRONT AIR DAM	JUPE,BARRAGE AIR AVANT		
NC10-51-9K0A	1				
50-803A		NUT,SIDE PROTECTOR	ECROU,PROTECTEUR LATERAL		
G158-50-803	4				
51-740		MASCOT,FRONT	MASCOTTE AV		
N066-51-731	1				
52-841A		NUT,CLIP	ECROU		
B455-56-135	6				
56-196A		RUBBER,SEAL-BUMPER	CAOUTCHOUC D'ETANCH.		
N066-50-M15	2				
56-196B		RUBBER,SEAL-BUMPER	CAOUTCHOUC D'ETANCH.		
N066-50-M25	2				
68-676F		FASTENER,SCREW	AGRAFE,VIS		
1395-68-676	2				
00	INT-	NB3 NB4 NB5 NB8 NB9 BLACK	NB3 NB4 NB5 NB8 NB9 NOIR		

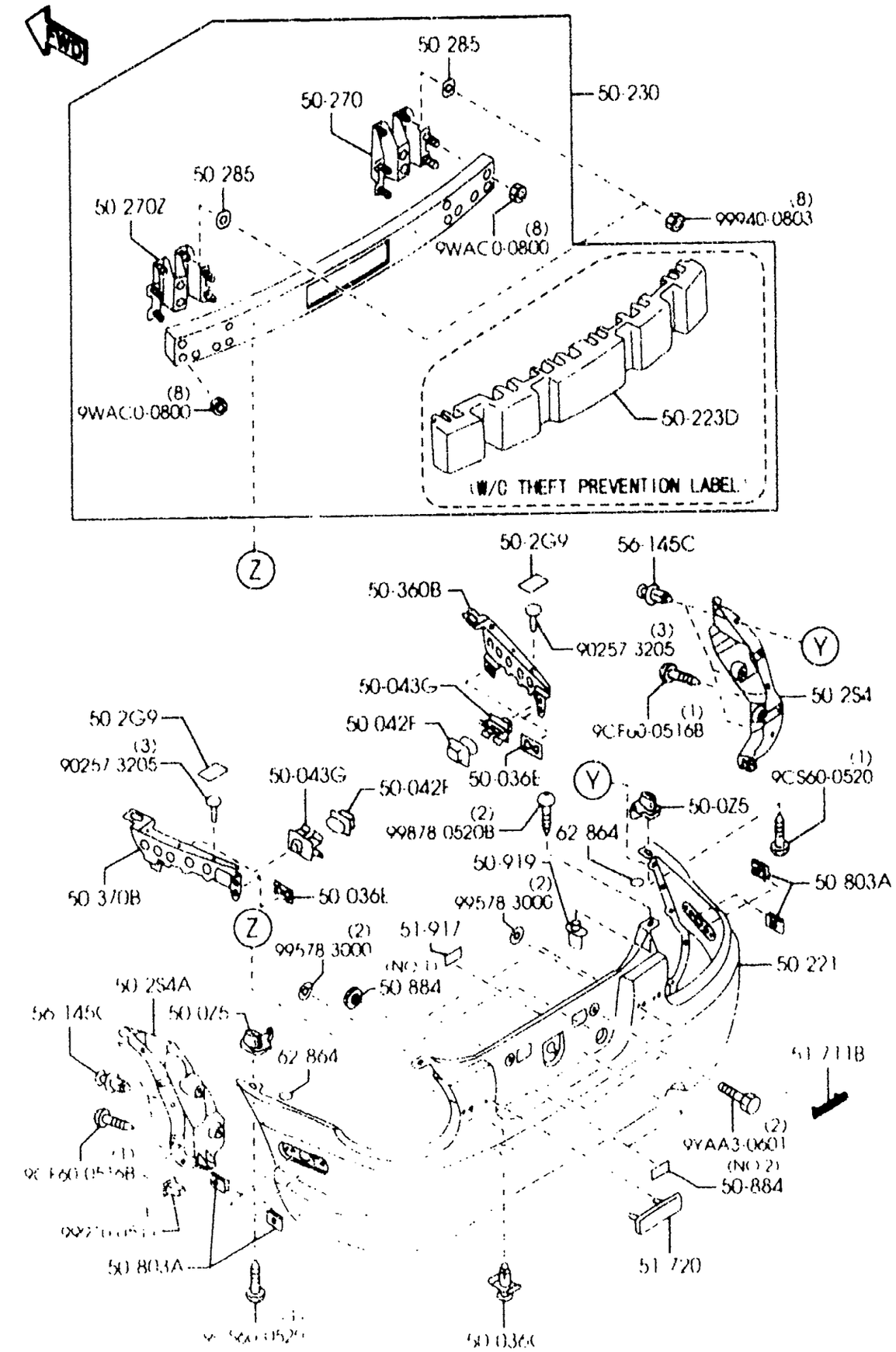

AUNA08

1N04680

PART NO.	QTY	MODEL/RESTRICTION	MODEL/RESTRICTION	MODEL/RESTRICTION	FROM-TO
50-0Z5		GROMMET,SCREW	PROTECTEUR,VIS		
BC1M-50-0Z5	2				
50-036C		FASTENER	AGRAFFE		
BF67-50-033	2				
50-036E		CLIP	ATTACHE		
GJ21-50-049	4				
50-042F		SLIDE'B',BUMPER	GLISSEUR'B',PARE-CHO CS		
NC10-50-E11B	2				
50-043G		SLIDE,FRONT BUMPER	COULISSE,PARE-CHOC F RONT		
NC10-50-E13A	2				
50-2G9		SEAL,RUBBER	JOINT DE CAOUTCHOUC		
NC10-50-2G1C	2				
50-2S4		SHIELD(R),SPLASH-R.B UMPER	BOUCLIER(D),ECLABOUS S.-AM		
NC10-50-341D	1				
50-2S4A		SHIELD(L),SPLASH-R.B UMPER	BOUCLIER(G),ECLABOUS S.-AM		
NC10-50-351D	1				
50-221		BUMPER,REAR	PARE-CHOC ARR.		
NCY1-50-220F A (NCY1-50-220G)	1	PAINT TO MATCH	PAINT TO MATCH		-1406
NCY1-50-220G	1	PAINT TO MATCH	PAINT TO MATCH		1406-
50-223D	4	FOAM,BUMPER-REAR	MOUS,BOUTOIR-AR		
NC13-50-311A	1	(W/O THEFT PREVENTIO N LABEL)			
50-230		REINF,BUMPER-REAR	PARE-CHOCS (D), AR		
NC13-50-260B AN(NC13-50-260C)	1	(W/O THEFT PREVENTIO N LABEL)			-1718
NC72-50-260A AN(NC72-50-260C)	1	(W/THEFT PREVENTION LABEL)			-1718
*NC13-50-260C AN(NC13-50-260D)	1	(W/O THEFT PREVENTIO N LABEL)			1718-1A01
*NC72-50-260C AN(NC72-50-260D)	1	(W/THEFT PREVENTION LABEL)			1718-1A01

1406 NB35**-216714
1718 NB35**-220210
1A01 NB35**-223281

CAT. AUNA08-04

2001-12

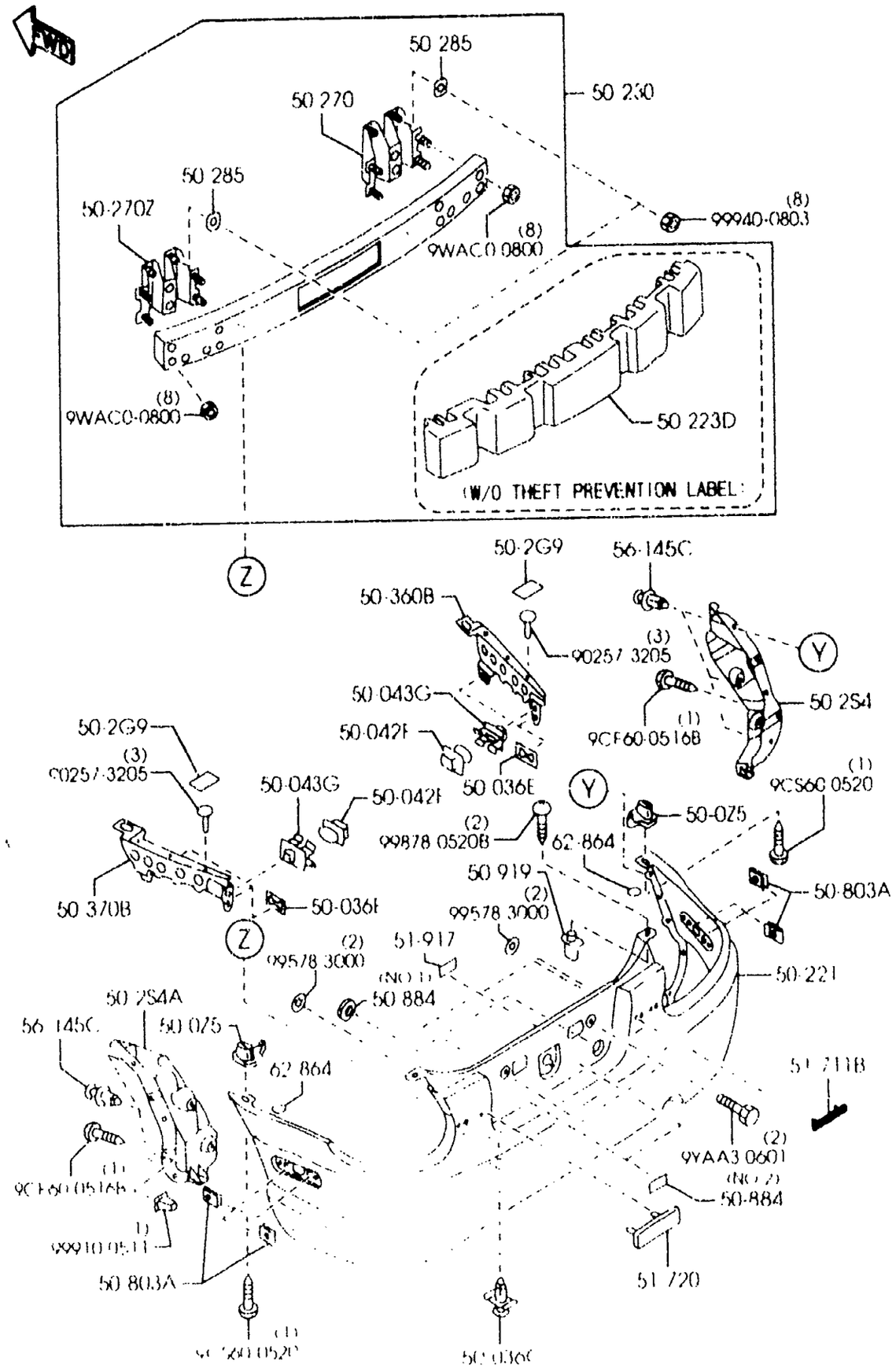

AUNA08

1N04680

PART NO	QTY	MODEL/RESTRICTION	MODEL/RESTRICTION	MODEL/RESTRICTION	FROM TO
CONT'D					
*NC13-50-260D	1	(W/O THEFT PREVENTION LABEL)			1A01-
*NC72-50-260D	1	(W/THEFT PREVENTION LABEL)			1A01-
50-270		STAY(R),RR. BUMPER	FERRURE COMPL. (D), RARE-		
NC10-50-270	1				-1A01
AN(NC10-50-270A)					
*NC10-50-270A	1				1A01-
50-270Z		STAY(L),RR. BUMPER	BOUTOIR PARE-CHOC AR R.G		
NC10-50-280	1				-1718
AN(NC10-50-280A)					
*NC10-50-280A	1				1718-1A01
AN(NC10-50-280B)					
*NC10-50-280B	1				1A01-
50-285		GASKET,SEAL	JOINT,JOINT D'ETANCHEITE		
G030-50-285	4				
50-360B		GUARD(R),REAR BUMPER	GARDE(G),AMORT. AR		
NC10-50-361B	1				
50-370B		GUARD(L),REAR BUMPER	GARDE(G),AMORT. AR		
NC10-50-371B	1				
50-803A		NUT,SIDE PROTECTOR	ECROU,PROTECTEUR LATERAL		
G158-50-803	4				
50-884		TAPE	RUBAN		
NC10-50-EM1	1	(ILLUST. NO.1)			
B455-50-G32	2	(ILLUST. NO.2)			
50-919		GROMMET,SCREW-SIDE WINDOW	BAGUE,VIS-FENETRE LATERA.		
B216-50-919	2				
51-711B		ORNAMENT,MAKER NAME-REAR	ORNEMENT,NOM DE FAB ARR		
NC10-51-711	1				
51-720		ORNAMENT,CAR NAME-REAR	ORNEMENT,NOM DE AUTO ARR		
NC10-51-721B	1	(MIATA)			
NC30-51-721B	1	(MX-5)			

1718 NB35**-220210
1A01 NB35**-223281

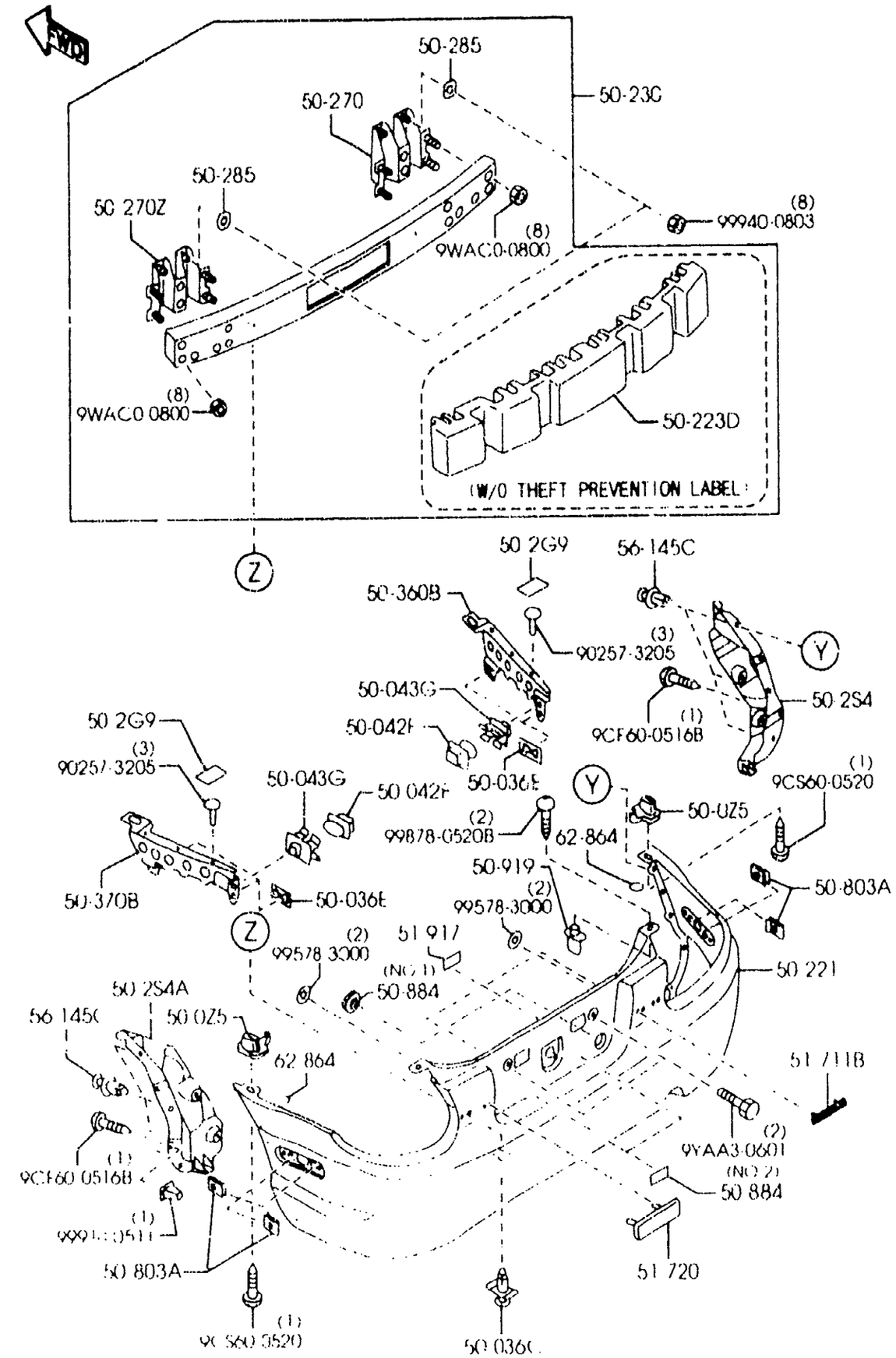

AUNA08

(N04680)

PART NO.	QTY	MODEL/RESTRICTION	MODEL/RESTRICTION	MODEL/RESTRICTION	FROM-TO
51-917		SEAL,RUBBER	JOINT CAOUTCHOUC		
NC10-50-2G2	3				
56-145C		CLIP,MUD GUARD	ETRIER,GARDE BOUE		
BC1D-56-145	6				
62-864		TAPE,PROTECTOR-STOPPER	BANDE,PROTECT.-PASTILLE		
G043-62-864A	2				

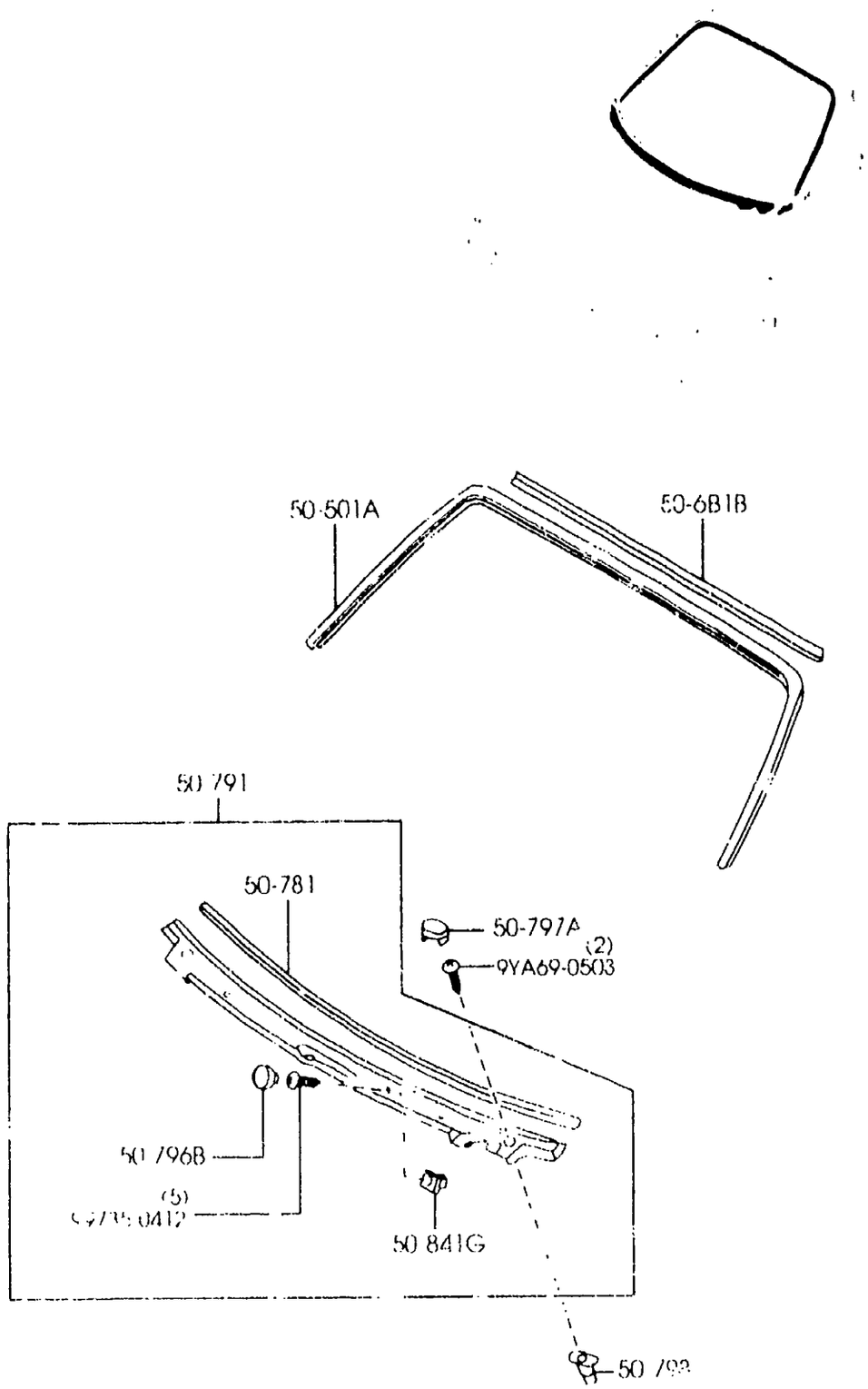

(1N10360)

PART NO.	QTY	MODEL/RESTRICTION	MODEL/RESTRICTION	MODEL/RESTRICTION	FROM-TO
50-501A NA01-50-601A	1	MOULD,FRT WINDOW-UP	MOULURE SUP.,FENETRE AV		
50-6B1B DX50-50-6B1	1	PROTR,MOULD-FRT WINDOW	PROTECTEUR,MOUL.-FENET.AV		
50-781 NA01-50-792A	1	PROTECTOR,COWL GRILLE	PROTECTEUR,		
50-791 NA01-50-790E	1	GRILLE,COWL	PROTECTION, RADIATEUR		
50-796B B455-50-796A	5	CAP	BOUCHON		
50-797A NA01-50-797A	2	CAP	BOUCHON		
50-798 NA01-50-798	2	SCREW,GROMMET	VIS,BAGUE		
50-841G NA01-51-789	5	GROMMET,SCREW	ANNEAU		

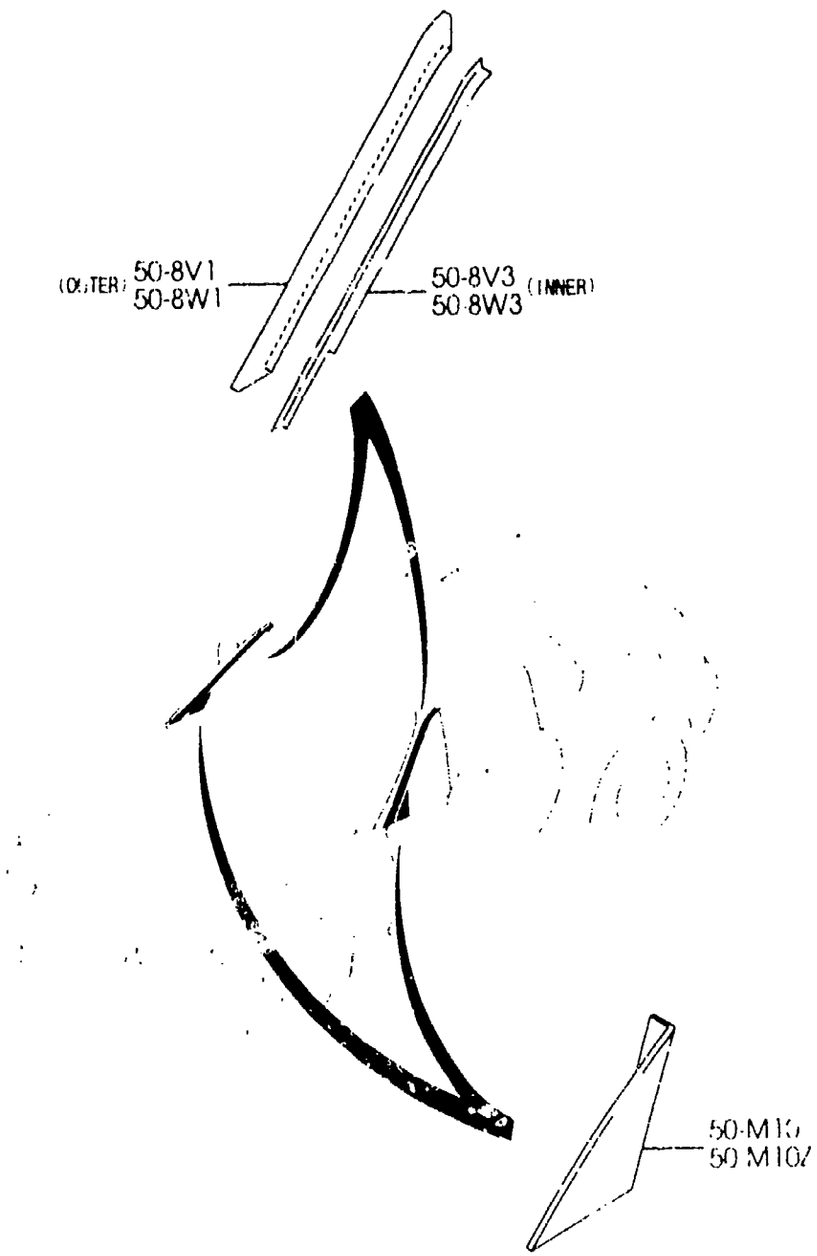

PART NO.	QTY	MODEL/RESTRICTION	MODEL/RESTRICTION	MODEL/RESTRICTION	FROM-TO
50-M10 N066-68-DJ1	1	GARNISH(R),FRONT DOOR (BLACK-TAPE)	GARNITURE(D),AV.PORTIERE		
50-M10Z N066-68-DJ6	1	GARNISH(L),FRONT DOOR (BLACK-TAPE)	GARNITURE(G),AV.PORTIERE		
50-8V1 NC10-50-8V1	1	STRIPE NO.1(R),BODY SIDE (BLACK-TAPE)	BANDE NO.1(D),COTE CARROS		
50-8V3 NC10-50-8V3	1	STRIPE NO.3(R),BODY SIDE (BLACK-TAPE)	BANDE NO.3(D),COTE CARROS		
50-8W1 NC10-50-8W1	1	STRIPE NO.1(L),BODY SIDE (BLACK-TAPE)	BANDE NO.1(G),COTE CARROS		
50-8W3 NC10-50-8W3	1	STRIPE NO.3(L),BODY SIDE (BLACK-TAPE)	BANDE NO.3(G),COTE CARROS		

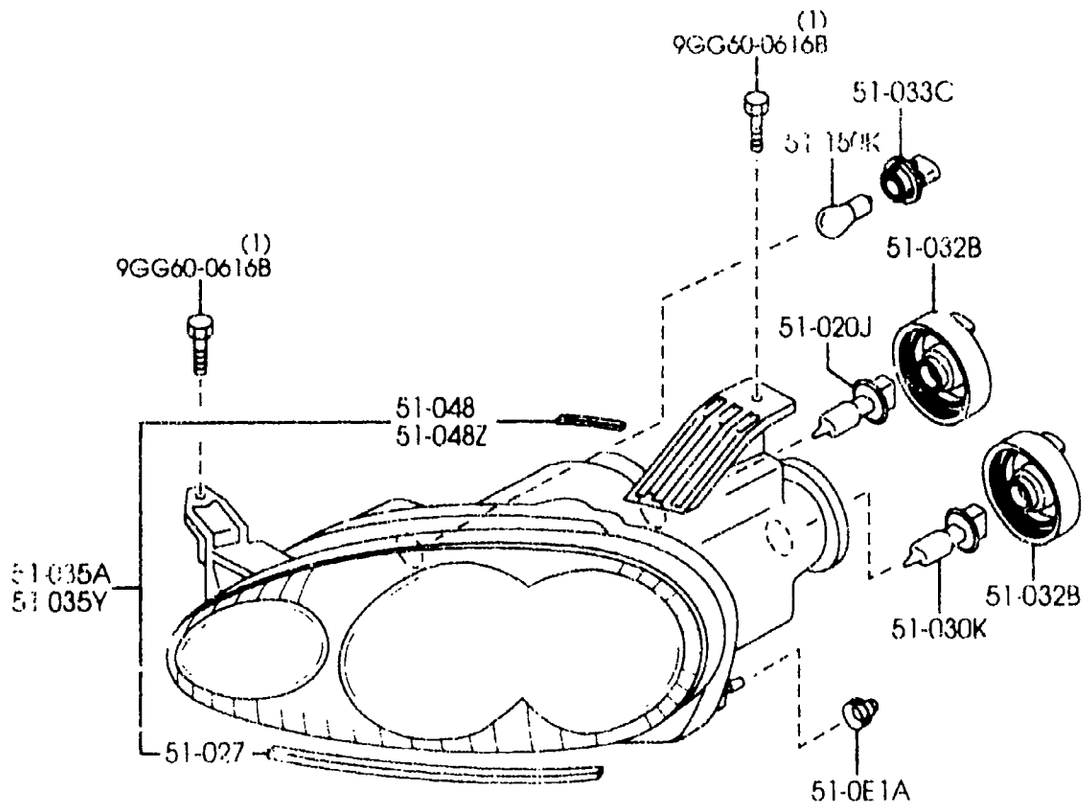

PART NO.	QTY	MODEL/RESTRICTION	MODEL/RESTRICTION	MODEL/RESTRICTION	FROM-TO
51-0E1A		FASTENER,LAMP	FERMETURE,LAMPE		
NC13-51-025C	2				
51-020J		BULB,HEAD LAMP	AMPOULE		
99703-7650	2	12V 65W	12V 65W		
51-027		PROTECTOR	PROTECTEUR		
N066-51-0N7	2				
51-030K		BULB	AMPOULE		
99703-7550	2	12V 55W	12V 55W		
51-032B		COVER	COUVERCLE		
N066-51-0A1	4				
51-033C		SOCKET	DOUILLE		
NC[illegible]-51-064	2				
51-035A		UNIT(R),HEAD LAMP	UNITE		
NC72-51-0K0A	1				-0801
A (NC72-51-0K0D)					
NC72-51-0K0D	1				0801-
51-035Y		UNIT(L),HEAD LAMP	UNITE		
NC72-51-0L0A	1				-0801
A (NC72-51-0L0D)					
NC72-51-0L0D	1				0801-
51-048		PROTECTOR(R)	PROTECTEUR (D)		
N066-51-0M5A	1				-0801
A (N066-51-0M5B)					
N066-51-0M5B	1				0801-1601
AN(N066-51-0M5C)					
N066-51-0M5C	1				1601-
51-048Z		PROTECTOR(L)	PROTECTEUR (G)		
N066-51-0N5A	1				-0801
A (N066-51-0N5B)					
N066-51-0N5B	1				0801-1601
AN(N066-51-0N5C)					
N066-51-0N5C	1				1601-

0801 NB35**-200666
1601 NB35**-210011

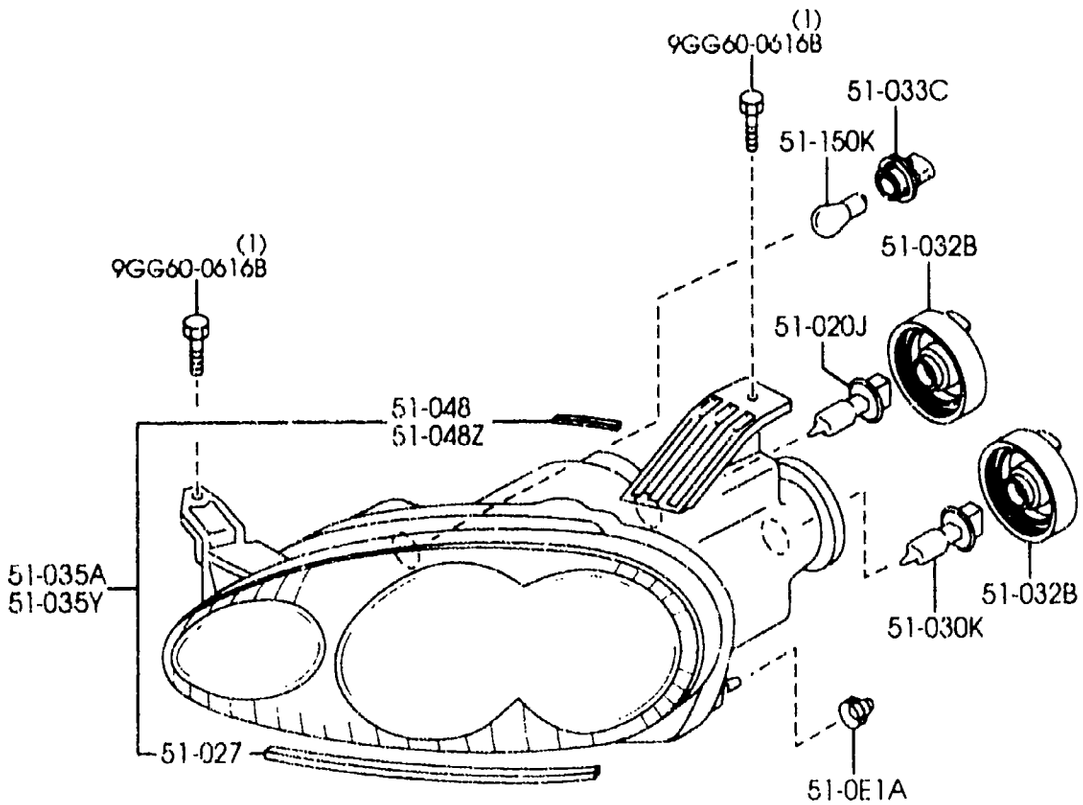

PART NO.	QTY	MODEL/RESTRICTION	MODEL/RESTRICTION	MODEL/RESTRICTION	FROM-TO
51-150K		BULB	AMPOULE		
99701-4278Y	2	A12V 27/8W	A12V 27/8W		

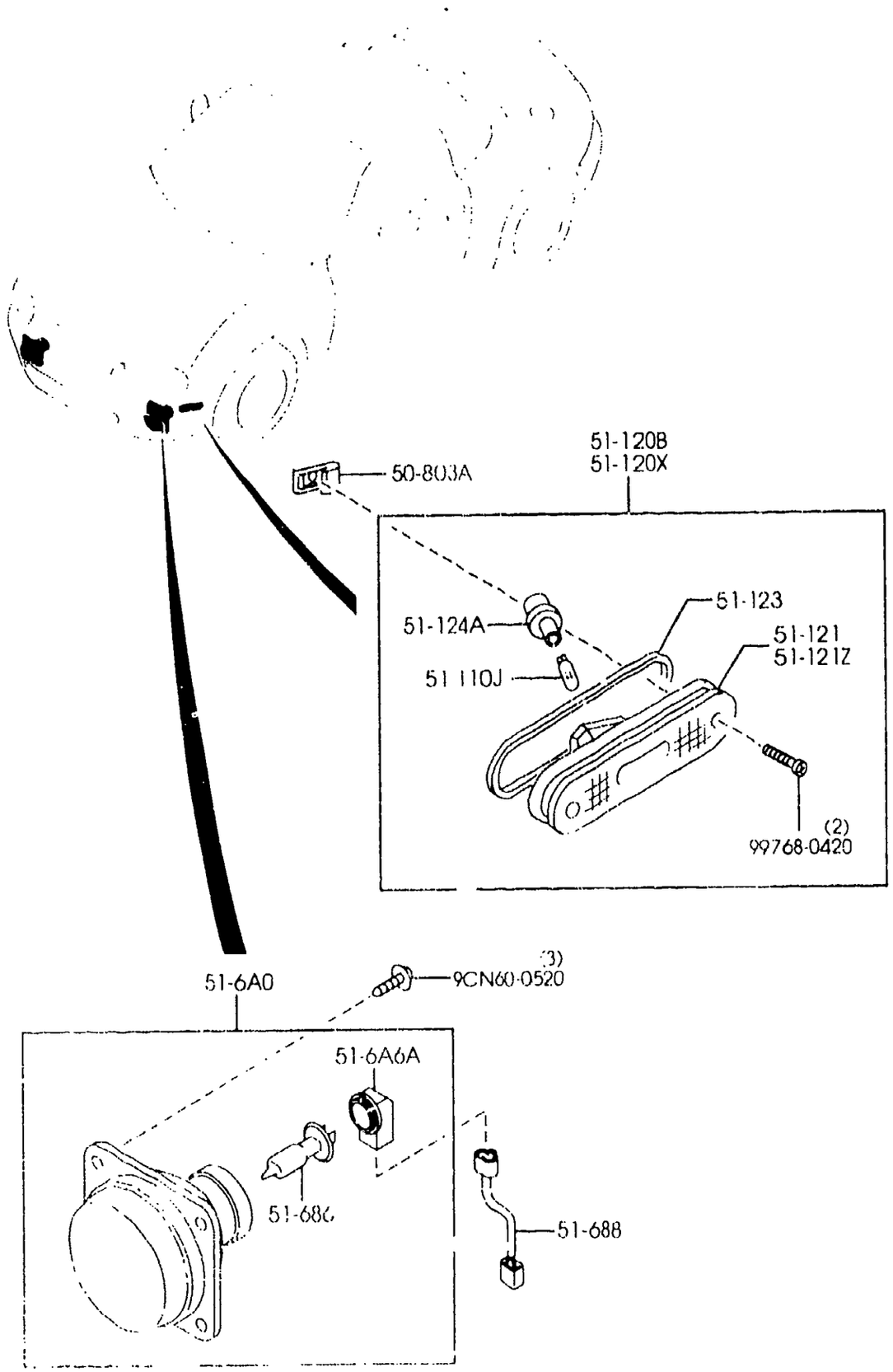

PART NO.	QTY	MODEL/RESTRICTION	MODEL/RESTRICTION	MODEL/RESTRICTION	FROM-TO
50-803A G158-50-803	4	NUT,SIDE PROTECTOR	ECROU,PROTECTEUR LATERAL		
51-110J 99701-6038	2	BULB 12V 3.8W	AMPOULE 12V 3.8W		
51-120B 8BN1-51-120	1	LAMP SET(R),SIDE TURN	JEU,CLIGNOTANT LATERAL(D)		
51-120X 8DN1-51-130	1	LAMP SET(L),SIDE TURN	JEU,CLIGNOTANT LATERAL(G)		
51-121 NA01-51-5EXA	1	LENS & BODY(R)	LENTILLE ET CORPS(D)		
51-121Z NA01-51-5FXA	1	LENS & BODY(L)	LENTILLE ET CORPS(G)		
51-123 NA01-51-5D3A	2	GASKET,SIDE TURN	JOINT,CLIGNOTANT LATERAL		
51-124A NA01-51-5[illegible]2	2	SOCKET,SIDE TURN	DOUILLE,		
51-6A0 N066-51-680	2	LAMP,FRONT FOG (W/FRONT FOG LAMP)	PHARE,ANTI-BROUILLARD		
51-6[illegible]6A B21H-51-6A6	2	SOCKET,LAMP (W/FRONT FOG LAMP)	DOUILLE,LAMPE		
51-686 99703-1550	2	BULB,FRONT FOG LAMP 12V 55W (W/FRONT FOG LAMP)	AMPOULE,PROJECT. ANTIBROI 12V 55W		
51-688 N066-51-688	2	CORD,FRONT FOG LAMP (W/FRONT [illegible]G LAMP)	CABLE,PROJECT. ANTIBROUI.		

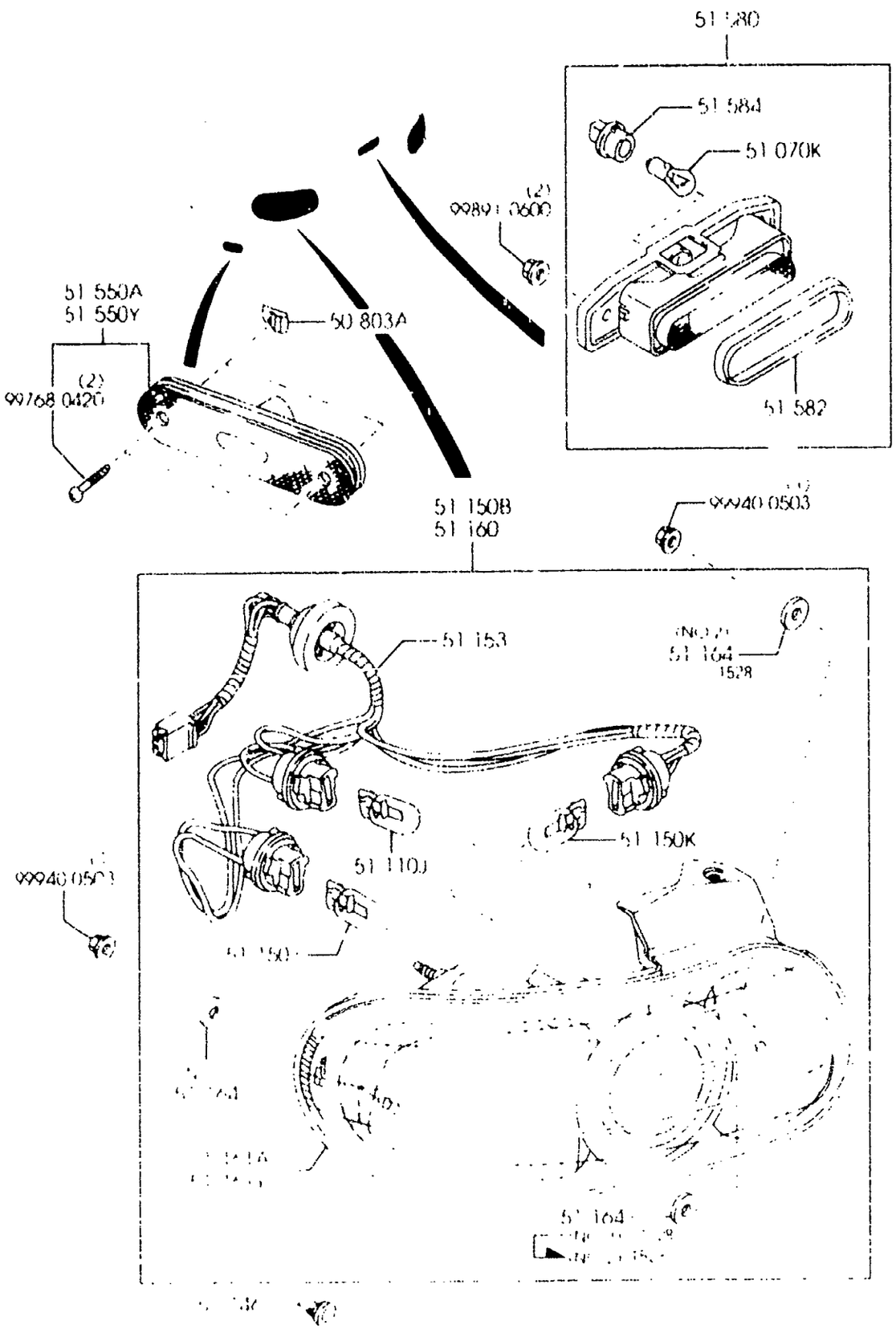

PART NO.	QTY	MODEL/RESTRICTION	MODEL/RESTRICTION	MODEL/RESTRICTION	FROM-TO
50-803A G158-50-803 *	4	NUT,SIDE PROTECTOR	ECROU,PROTECTEUR LATERAL		
51-070K 99701-3210	1	BULB 12V 21W	AMPOULE 12V 21W		
51-110J 99700-6210Y	2	BULB	AMPOULE		
51-146 GA7B-51-146	2	GROMMET,SCREW-R.COMB	ANNEAU,		
51-150B N066-51-150	1	LAMP(R),RR COMB.	LAMPE(D),COMBINAISON ARR		
51-150J 99700-6210	2	BULB 12V 21W	AMPOULE 12V 21W		
51-150K 99700-8215	2	BULB 12V 21/5W	AMPOULE 12V 21/5W		
51-153 N066-51-155	2	SOCKET,RR.COMB.	DOUILLE		
51-160 N066-51-160	1	LAMP(L),RR COMB.	LAMPE(G),COMBIN. AR		
51-161A N066-51-170	1	LENS & BODY(R),RR COMB.	LENTILLE ET CORPS(D),		
51-161Y N066-51-180	1	LENS & BODY(L),RR COMB.	LENTILLE ET CORPS(G),		
51-164 H432-51-158	2	GASKET(R),RR COMB. (ILLUST. NO.1)	JOINT (D)		
H432-51-158	2	(ILLUST. NO.2)			-1528
H432-51-158	2	(ILLUST. NO.3)			-1528
N066-51-158	2	(ILLUST. NO.2)			1528-

1528 NB35**-218797

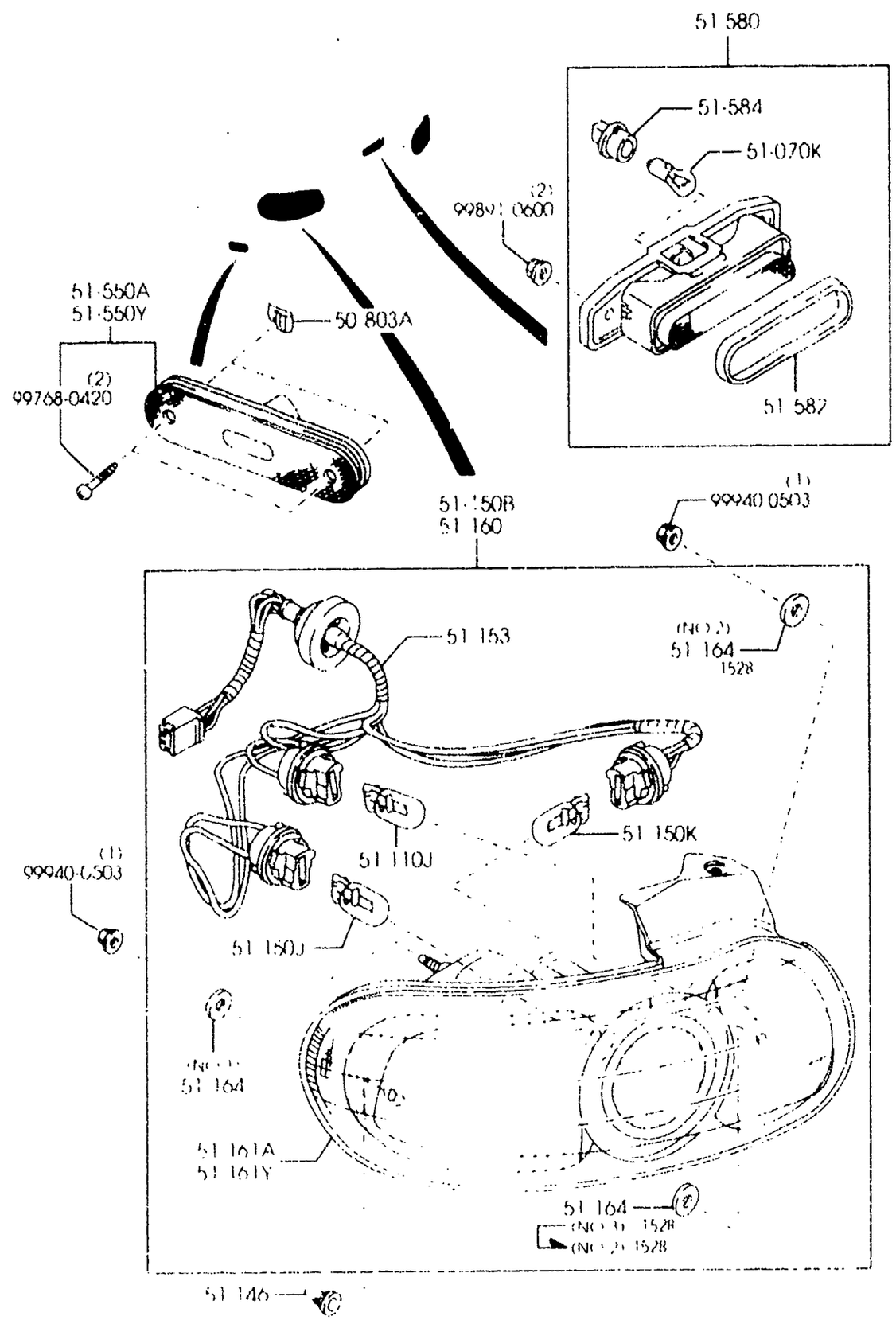

PART NO.	QTY	MODEL/RESTRICTION	MODEL/RESTRICTION	MODEL/RESTRICTION	FROM-TO
51-550A NC10-51-5H0A	1	LAMP(R),SIDE TURN-RR	CLIGNOTANT LATERAL A R(D)		
51-550Y NC10-51-5J0A	1	LAMP(L),SIDE TURN-RR	CLIGNOTANT LATERAL A R(G)		
51-580 NC10-51-580C	1	LAMP,STOP-HI.MOUNT.	FEU,STOP-IN.ELEV.		
51-582 NC10-51-592A	1	GASKET,STOP LAMP-HI. MOUNT	JOINT ETAN.FEU STOP-ELEVE		
51-584 NA12-51-584A	1	SOCKET,STOP LAMP-HI. MOUNT	DOUILLE,FEU STOP-ELE VE		

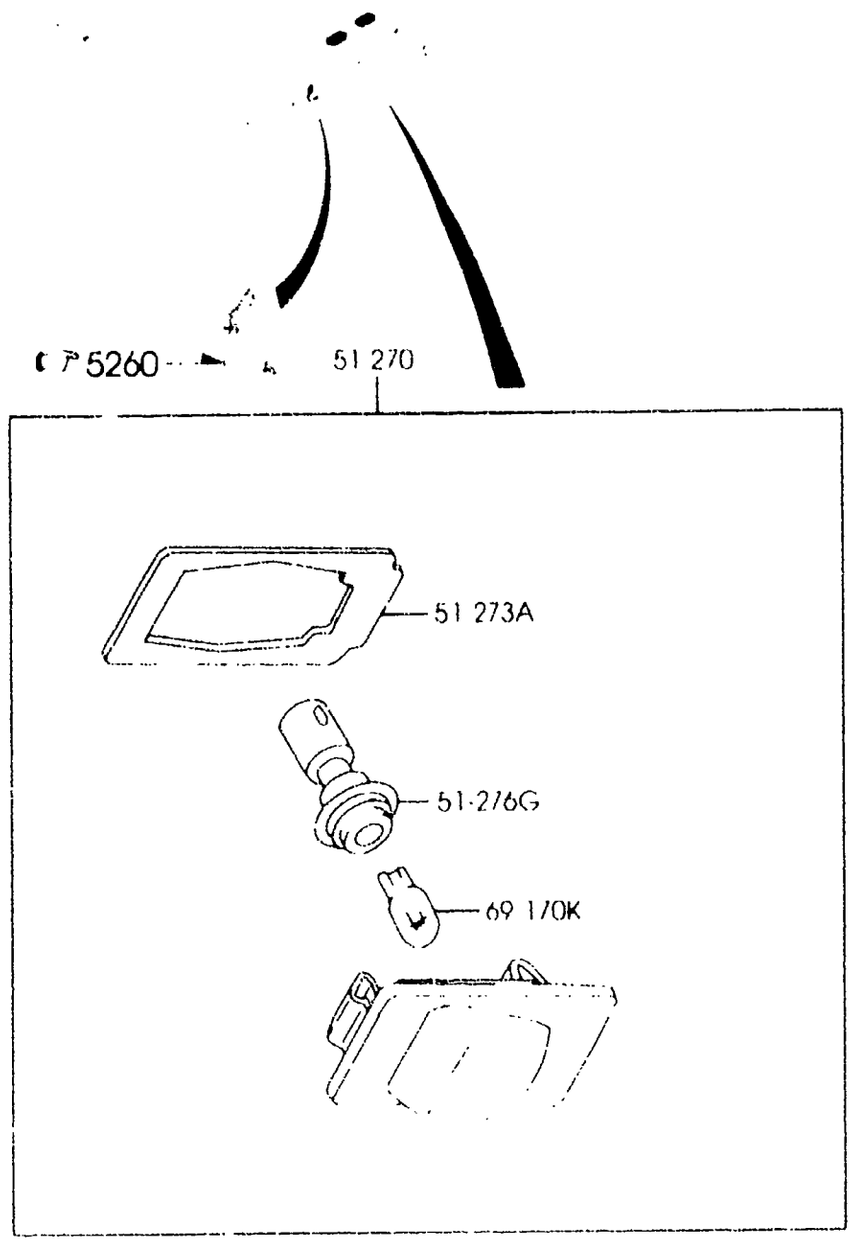

PART NO.	QTY	MODEL/RESTRICTION	MODEL/RESTRICTION	MODEL/RESTRICTION	FROM-TO
51-270		LAMP,LICENSE	FEU DE PLAQUE		
NC10-51-270B	2				
51-273A		GASKET,LICENSE	JOINT,FEU DE PLAQUE		
NC10-51-273A	2				
51-276G		SOCKET,LICENSE LAMP	DOUILLE,FEU DE PLAQU E		
NC10-51-272	2				
69-170K		BULB,INTERIOR MIRROR	AMPOULE		
99701-6050	2	12V 5W	12V 5W		

5125A INTERIOR LAMPS

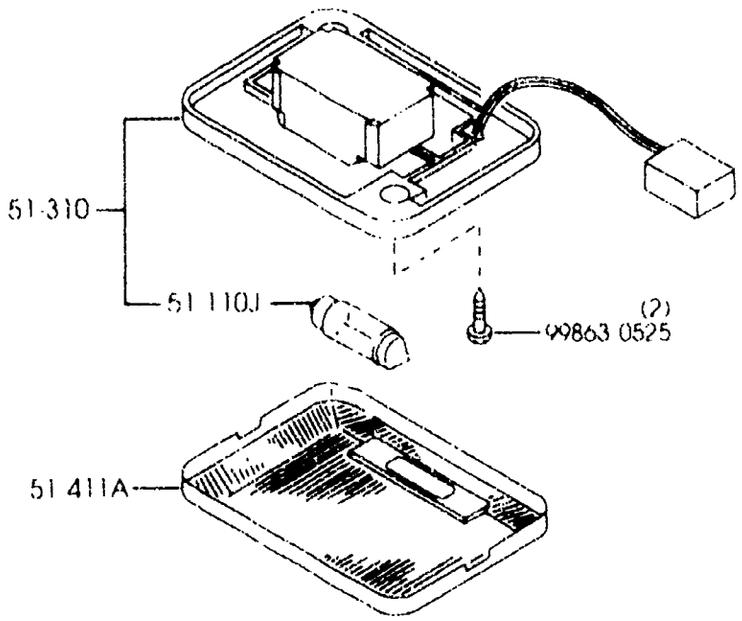

PART NO.	QTY	MODEL/RESTRICTION	MODEL/RESTRICTION	MODEL/RESTRICTION	FROM-TO
51-110J		BULB	AMPOULE		
99700-5080L	1	12V/8W	12V/8W		
51-310		LAMP,INTERIOR	PLAFONNIER		
NB38-51-310B AN(NB38-51-310C)	1				-1A01
*NB38-51-310C	1				1A01-
51-411A		LENS,ROOM LAMP	LENTILLE,PLAFONNIER		
NB38-51-311 AN(NB38-51-311A)	1				-1A01
*NB38-51-311A	1				1A01-

1A01 NB35**-223281

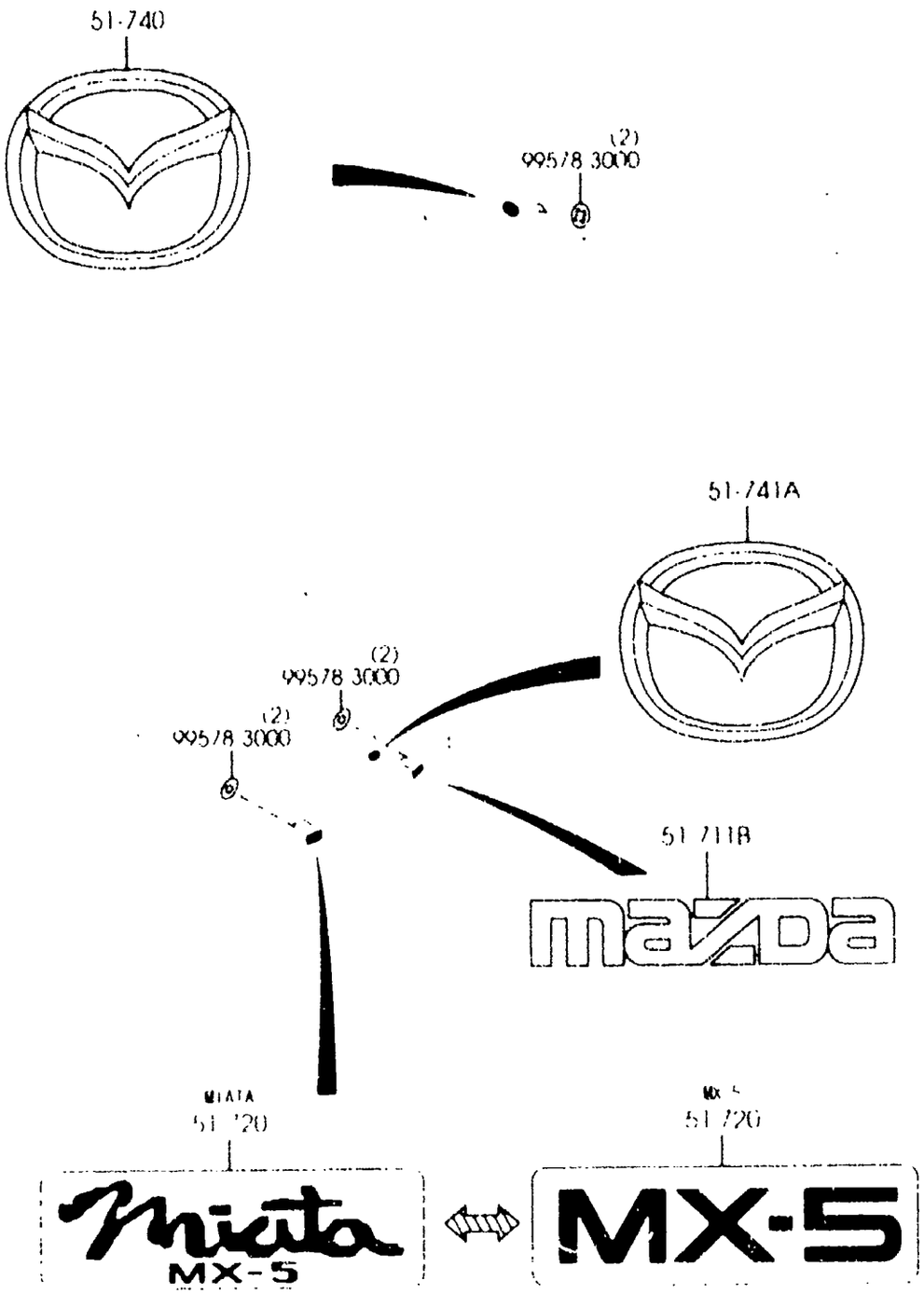

PART NO.	QTY	MODEL/RESTRICTION	MODEL/RESTRICTION	MODEL/RESTRICTION	FROM-TO
51-711B NC10-51-711	1	ORNAMENT,MAKER NAME-REAR	ORNEMENT,NOM DE FAB ARR		
51-720 NC10-51-721B	1	ORNAMENT,CAR NAME-REAR (MIATA)	ORNEMENT,NOM DE AUTO ARR		
*NC30-51-721B	1	(MX-5)			
51-740 N036-51-731	1	MASCOT,FRONT	MASCOTTE AV		
51-741A NC37-51-731A	1	MASCOT,REAR	MASCOTTE,AR		

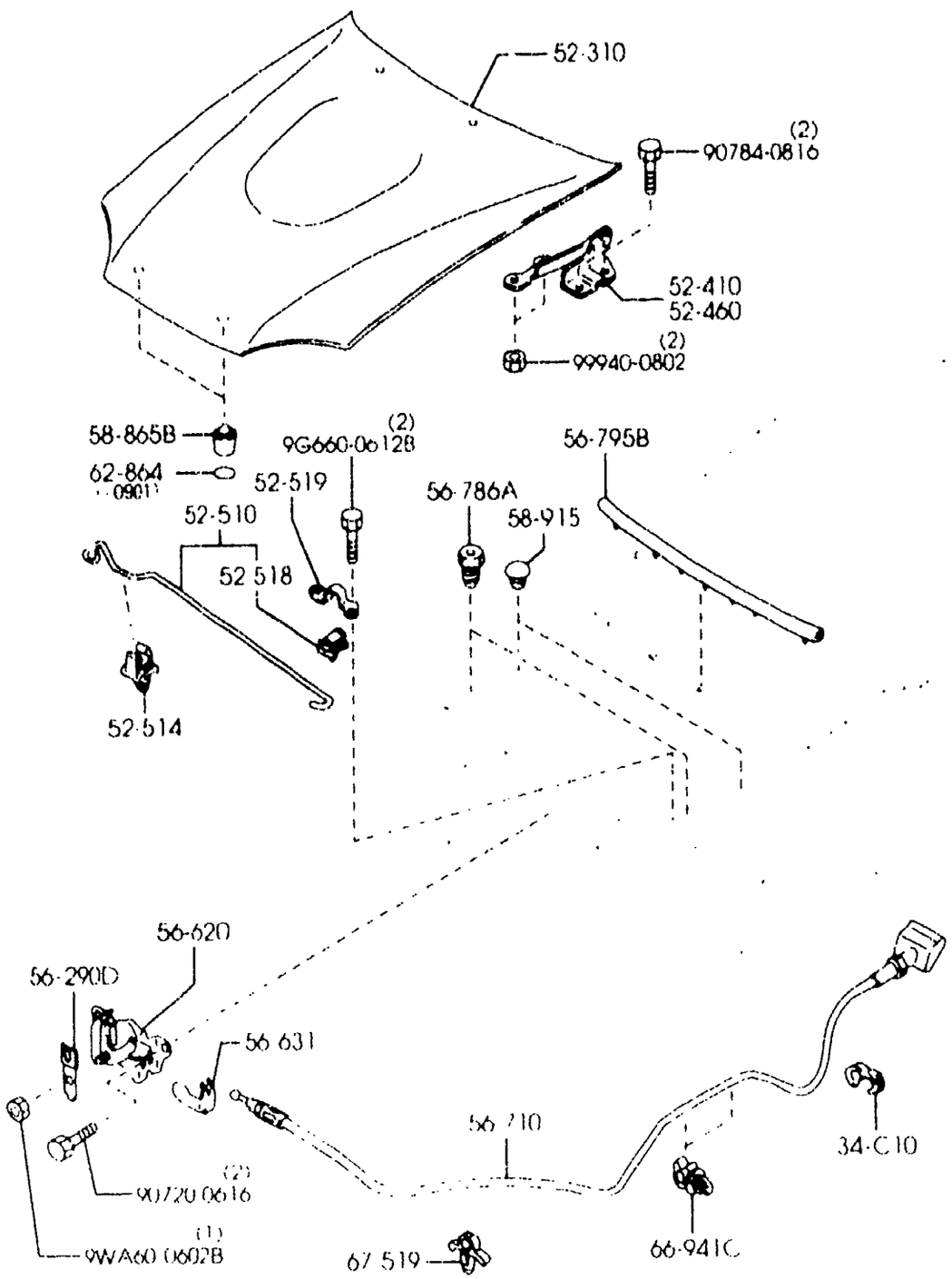

PART NO.	QTY	MODEL/RESTRICTION	MODEL/RESTRICTION	MODEL/RESTRICTION	FROM-TO
34-C10		BAND,PIPE	BANDE,TUYAU.		
B214-34-C10	1				
52-310		BONNET	CAPOT, AV		
NCY0-52-31XF	1				-0927
A (NCY0-52-31XH)					
NCY0-52-31XH	1				0927-
52-410		HINGE(R),BONNET	CHARNIERE(D) ,CAPOT		
NA01-52-410D	1				
52-460		HINGE(L),BONNET	CHARNIERE(G),CAPOT		
NA01-52-420D	1				
52-510		STAY,BONNET	FERRURE, CAPOT		
NC10-56-650D	1				
52-514		HOLDER,ROD	SUPPORT,TRINGLE		
G030-56-693A	1				
52-518		HOLDER,BONNET STAY	SUPPORT,FERRURE DE C APOT		
T001-56-652	1				
52-519		PLATE,SET-HOLDER	PLAQUE DE FIXATION,		
BP14-56-641	1				
56-290D		BRACKET	SUPPORT		
NC10-56-626	1				
56-620		LOCK,BONNET	VERROUILLAGE CAPOT		
NC10-56-620A	1				
56-631		FASTENER,BONNET RELE ASE	AGRAFE,DECLENCH. CAP OT		
LA01-56-631	1				
56-710		WIRE,RELEASE-BONNET	CABLE DE DECLENCHEME NT		
NC10-56-720C	1				
56-786A		RUBBER,CUSHION	SILENT BLOC		
BC1M-56-786	2				

0927 NB35##-204554

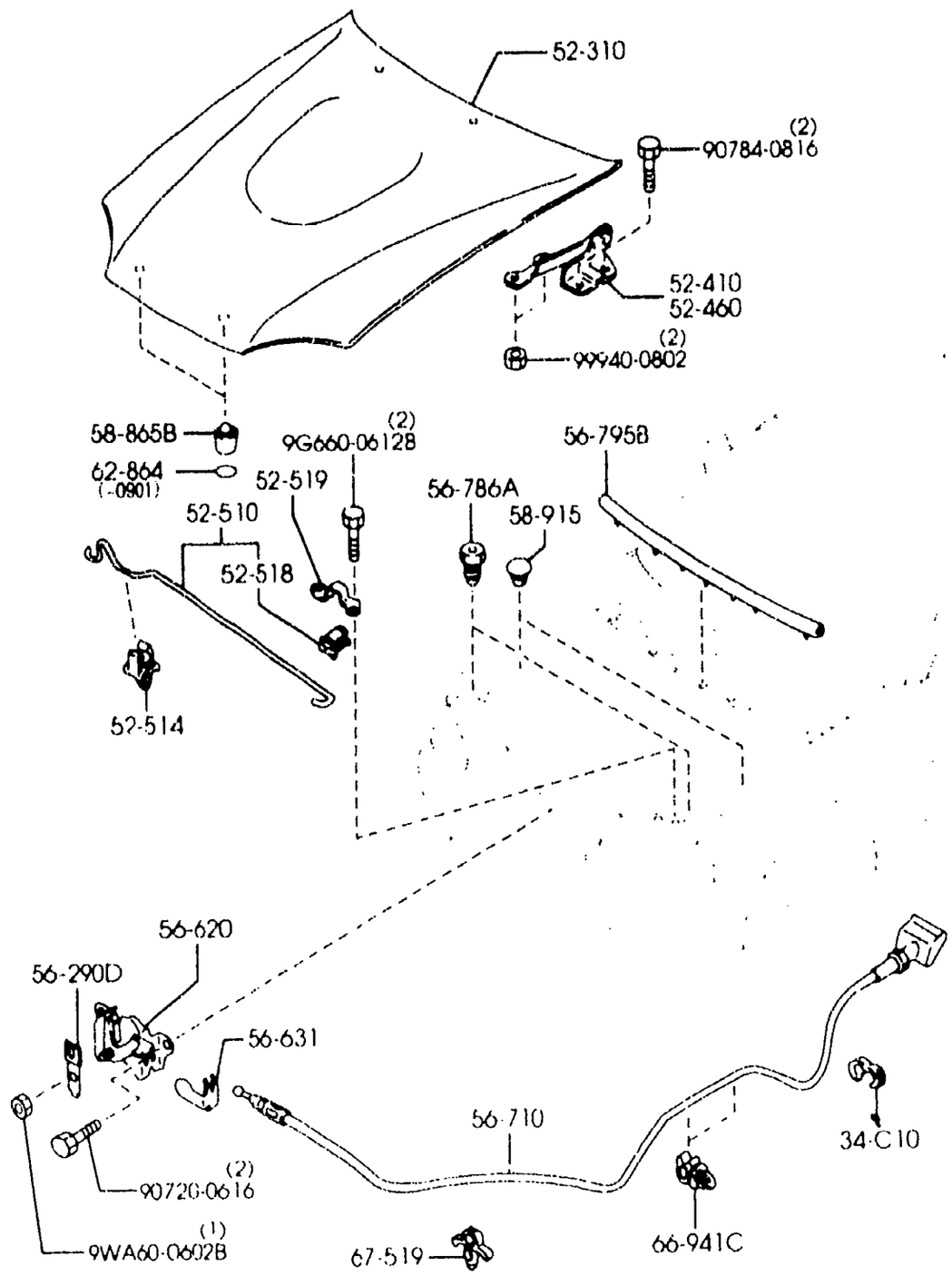

PART NO.	QTY	MODEL/RESTRICTION	MODEL/RESTRICTION	MODEL/RESTRICTION	FROM-TO
56-795B NC10-56-760A	1	WEATHERSTRIP,BONNET-REAR	BURRELET,CAPOT-MOTEUR AR		
58-865B G030-58-873	2	CUSHION,RUBBER	CAOUTCHOUC		
58-915 G001-58-915	2	PLUG,HOLE	BOUCHON D'ORIFICE		
62-864 NC10-56-864A	2	TAPE,PROTECTOR-STOPPER	BANDE,PROTECT.-PASTILLE		-0901
66-941C UB42-66-971	2	CLIP	ATTACHE		
67-519 G030-67-519	1	CLIP,PIPE	ATTACHE		

0901 NB35**-203448

5260A TRUNK LID

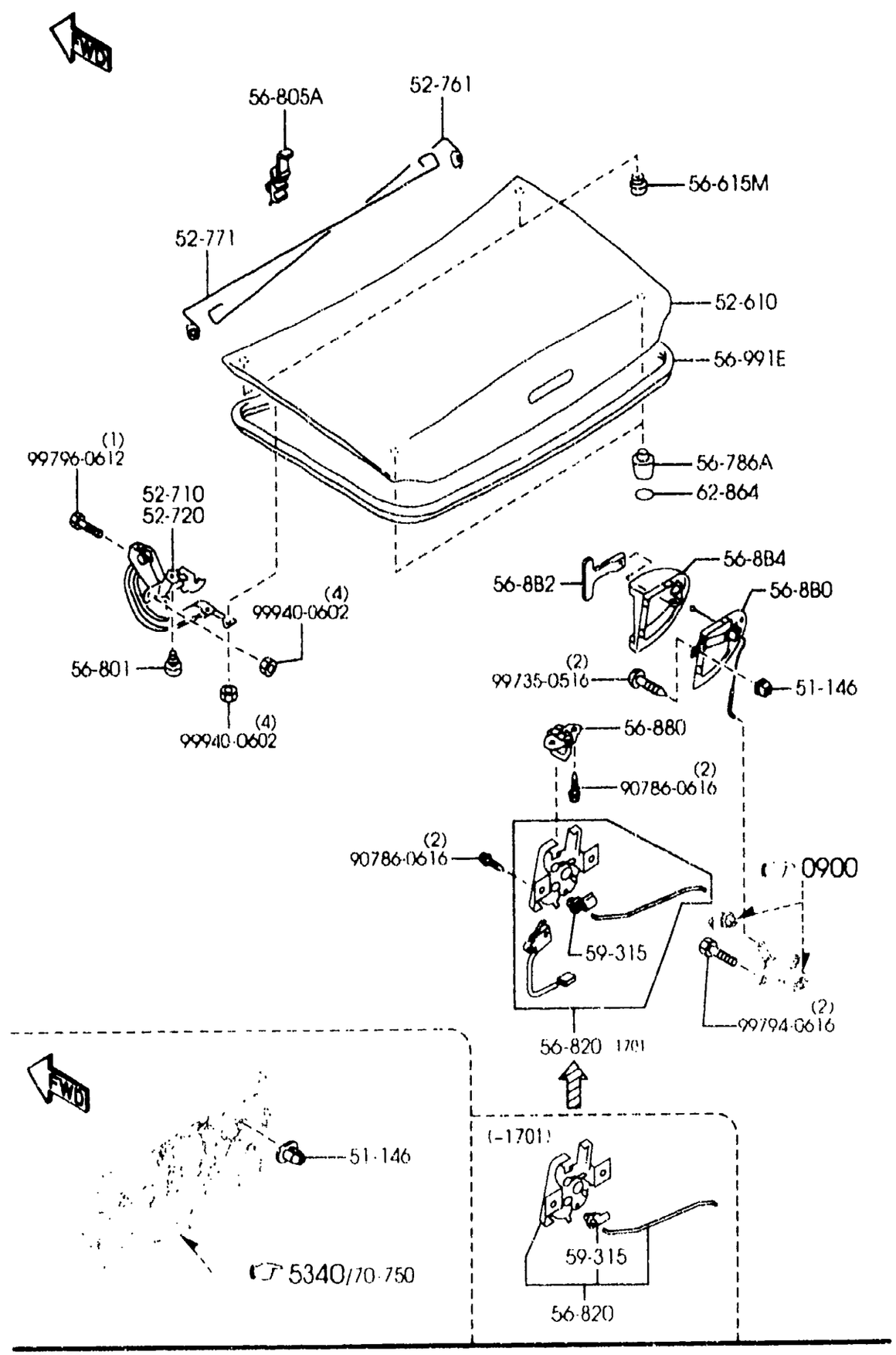

PART NO.	QTY	MODEL/RESTRICTION	MODEL/RESTRICTION	MODEL/RESTRICTION	FROM-TO
51-146 B01W-51-142B	2	GROMMET,SCREW-R.COMB	ANNEAU,		
52-610 NCY0-52-61XF	1	LID,TRUNK	COUVERCLE DE MALLE		
52-710 NA01-52-710C	1	HINGE(R),TRUNK LID	CHARNIERE (D),COFFRE		
52-720 NA01-52-720B	1	HINGE(L),TRUNK LID	CHARNIERE (G),COFFRE		
52-761 NC10-52-791A	1	SPRING(R),BALANCE	RESSORT (D), DE COMPENSAT		
52-771 NC10 52-792A	1	SPRING(L),BALANCE	RESSORT (G), DE COMPENSAT		
59-315M NA01-56-051	2	PLUG,DRAIN	BOUCHON DE VIDANGE		
56-786A H043-56-786	2	RUBBER,CUSHION	SILENT BLOC		
56-8B0 NC10-56-8B0B	1	CABLE,RELEASE	CABLE DECLENCHEUR		
56-8B2 BJ0E-56-8B2B	1	HANDLE,RELEASE	MANETTE,DECHARGE		
56-8B4 NC10-56-8B4A	1	BASE(L),IN REL HANDLE	SOCLE MANETTE REL INT(G)		
56-801 NA01-56-802	2	CUSHION,LID HINGE	COUSSIN,CHARNIERE DE COUVERCLE		
56-805A NA01-56-805	1	HOLDER,BALANCE SPRING	PORTE,RESSORT BALANCE		
56-820 N066-56-820C	1	LOCK,LID (W/KEY LESS ENTRY)	VERROUILLAGE COFFRE		-0901

0901 NB35**-203448

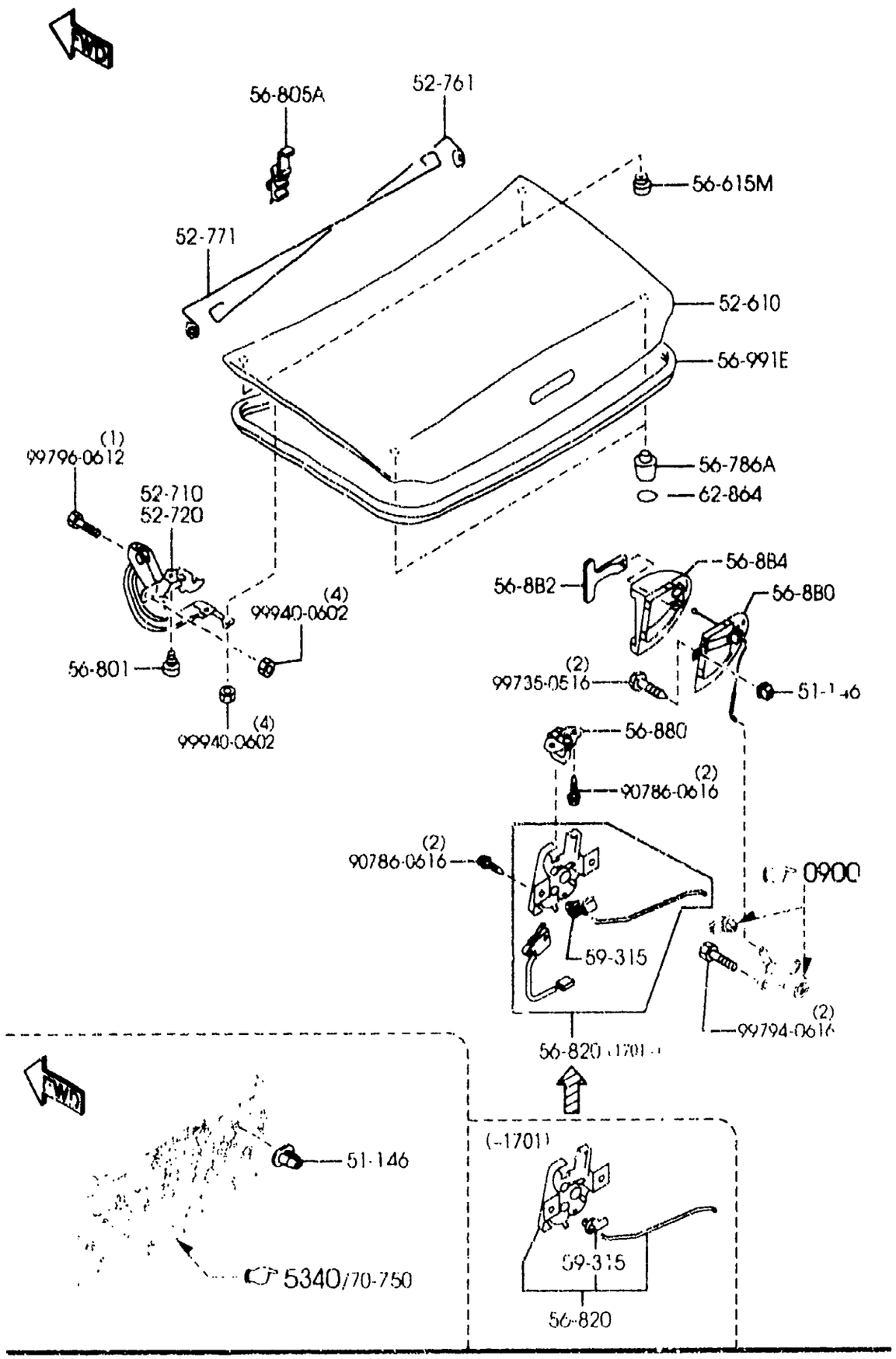

PART NO.	QTY	MODEL/RESTRICTION	MODEL/RESTRICTION	MODEL/RESTRICTION	FROM-TO
CONT'D AN(N066-56-820D)					
NC10-56-820C	1	(W/O KEY LESS ENTRY)			-1701
N066-56-820D	1	(W/KEY LESS ENTRY)			0901-1701
*NC87-56-820B	1	(W/O KEY LESS ENTRY)			1701-
*NC88-56-820A	1	(W/KEY LESS ENTRY)			1701-
56-880		STRIKER,LID	GACHE, COFFRE		
NA01-56-840	1				
56-991E		WEATHERSTRIP,LID	PROFILE D'ETANCH.,		
NC10-56-951	1				
59-315		CLIP	ATTACHE		
G030-59-315	1				
62-864		TAPE,PROTECTOR-STOPPER	BANDE,PROTECT.-PASTILLE		
G043-62-864A	2				

0901 NB35**-203448
1701 NB35**-219555

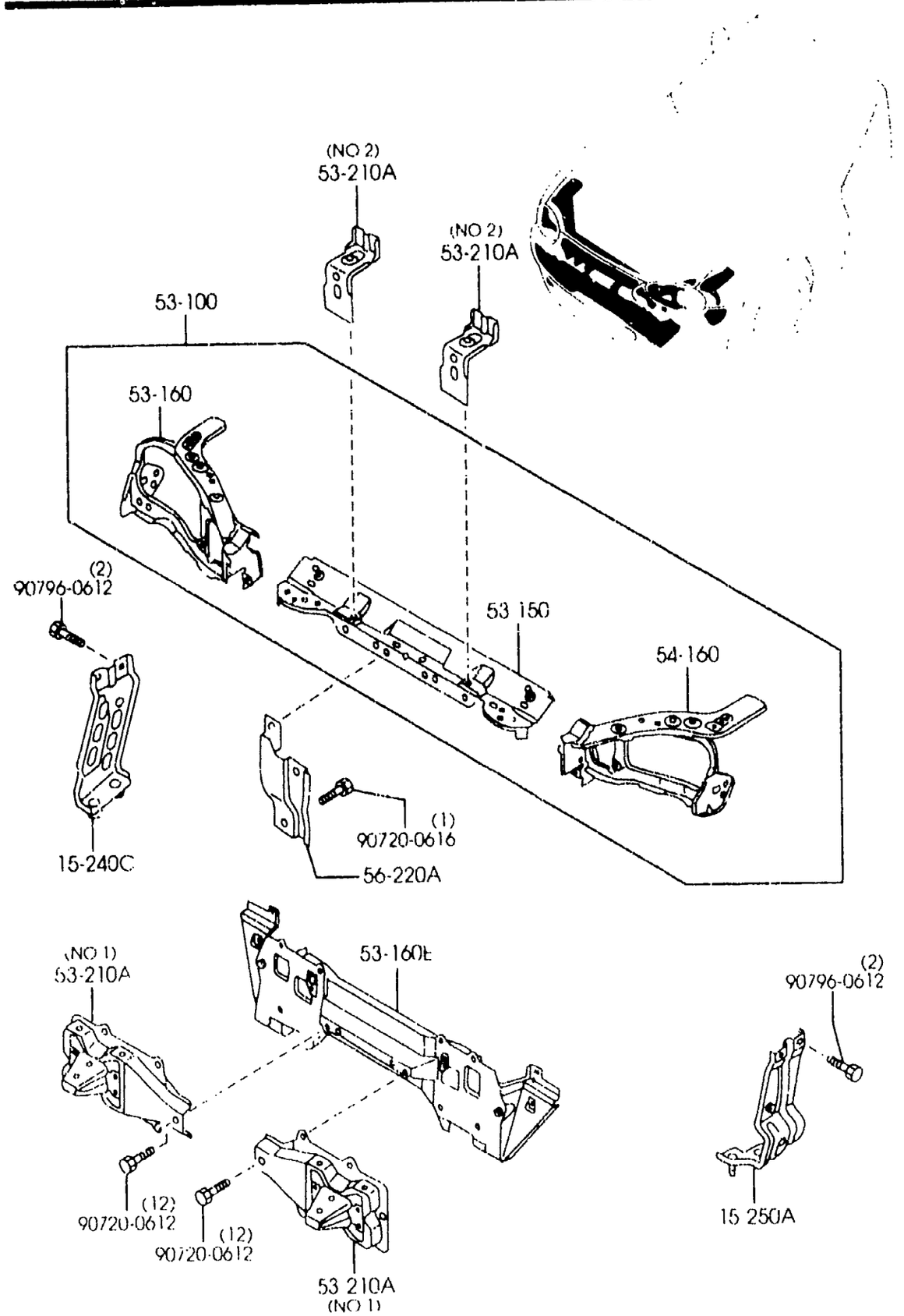

5310A -1 * FRONT PANELS

PART NO.	QTY	MODEL/RESTRICTION	MODEL/RESTRICTION	MODEL/RESTRICTION	FROM-TO
15-240C		BRACKET(R),RADIATOR	SUPPORT(D),RADIATEUR		
BP4W-15-241	1				
15-250A		BRACKET(L),RADIATOR	SUPPORT(G),RADIATEUR		
BP4W-15-250	1				
53-100		PANEL,SHROUD	TOLE DE RADIATEUR		
N067-53-100A (N067-53-100B)	1				-0C01
N067-53-100B	1				0C01-
53-150		MEMBER,SHROUD-UPPER	PLAQUE SUP. DEFLECTEUR		
N067-53-150A	1				
53-160		PANEL(R),SHROUD	PANNEAU(D),DEFLECTEUR		
NCY0-53-120B	1				
53-160E		MEMBER NO.1,CROSS	TRAVERSE NO 1		
N067-53-16XA	1				
53-210A		BRACKET,BUMPER	ATTACHE,PARE-CHOCS		
NC10-52-12X	2	(ILLUST. NO.1)			
NC10-53-1D0A	2	(ILLUST. NO.2)			
54-160		PANEL(L),SHROUD	PANNEAU(G),DEFLECTEUR		
NCY0-54-120B	1				
56-220A		STAY,LOCK-BONNET	SUPPORT,SERRURE-CAPOT		
N053-56-221C	1				

0C01 NB35**-207195

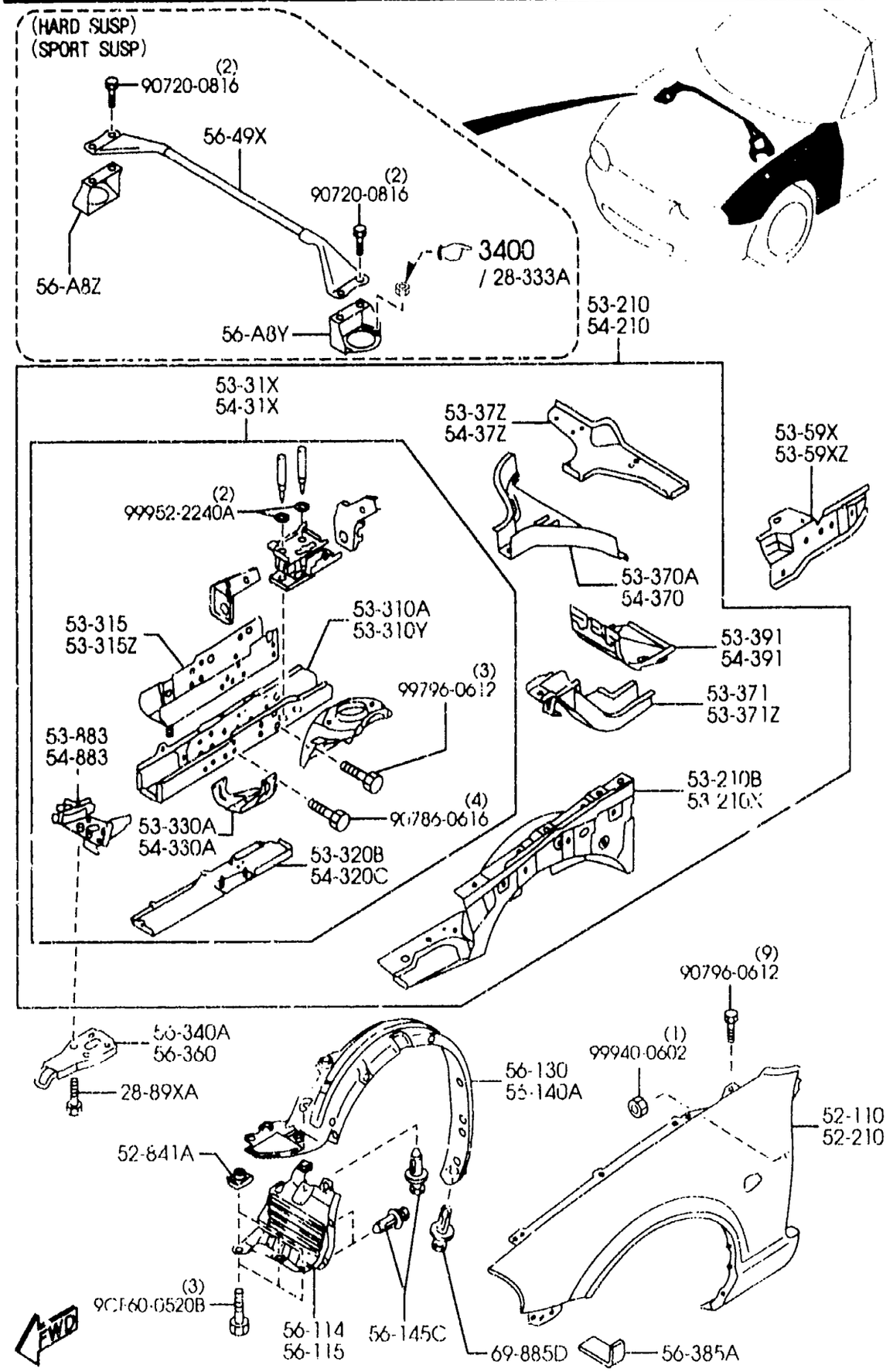

AUNA08

5320A -1 FENDER & WHEEL APRON PANELS

PART NO.	QTY	MODEL/RESTRICTION	MODEL/RESTRICTION	MODEL/RESTRICTION	FROM-TO
28-89XA GJ21-28-89X	6	BOLT,CROSS MEMBER	BOULON,TRAVERSE PROFILEE		
52-110 NCY0-52-110F	1	PANEL(R),FENDER-FRT.	AILE AVANT (D)		
52-210 NCY0-52-210F	1	PANEL(L),FENDER-FRT.	AILE AVANT (G)		
52-841A B455-56-135	6	NUT,CLIP	ECROU		
53-210 NCY0-53-200B	1	PANEL(R),APRON & FRAME	PASSAGE DE ROUE (D)		
53-210B N067-53-210A	1	PANEL(R),WHEEL APRON	PANNEAU(D),TABLIER ROUE		
53-210X N067-54-210A	1	PANEL(L),WHEEL APRON	PANNEAU(G),TABLIER ROUE		
53-31X N066-53-31X	1	FRAME(R),FRONT	CADRE(D),AVANT		
53-310A NC10-53-310	1	FRAME(R),SIDE-INNER	CADRE LATERAL INT.(D)		
53-310Y NC10-54-310	1	FRAME(L),SIDE-INNER	CADRE LATERAL INT.(G)		
53-315 NC10-53-35XA	1	REINF.(R),FRAME-FRT SIDE	RENFORT(D),CHASSIS-AVANT.		
53-315Z NC10-54-35XA	1	REINF.(L),FRAME-FRT SIDE	RENFORT(D),CHASSIS-AVANT		
53-320B NC10-53-320B	1	FRAME(R),SIDE-FRONT	CADRE(D),LATERALE-AVANT		
53-330A N067-53-330	1	BRACKET(R),STABILIZER	SUPPORT(D),STABILIZAT.		

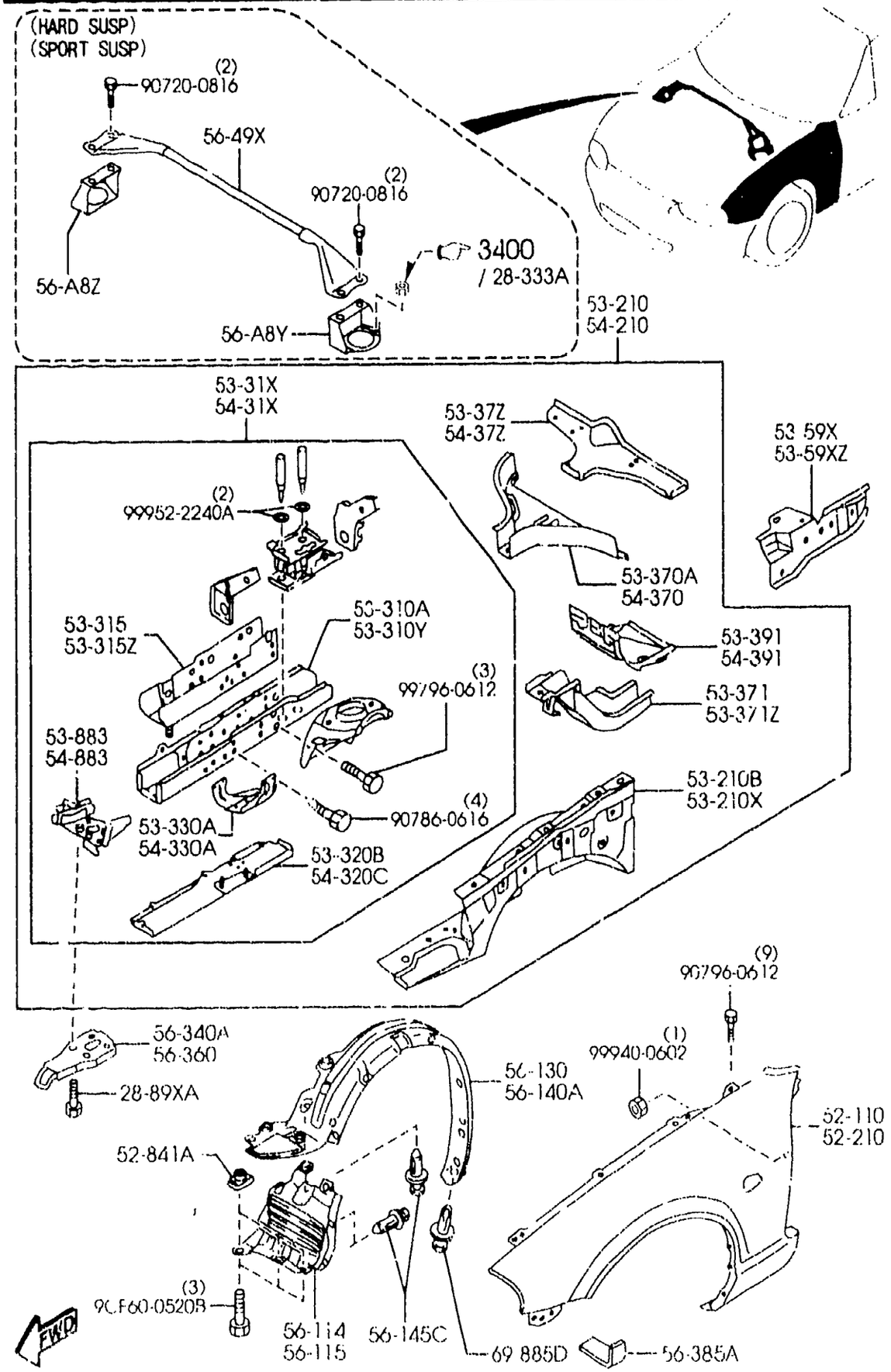

AUNA08

PART NO.	QTY	MODEL/RESTRICTION	MODEL/RESTRICTION	MODEL/RESTRICTION	FROM-TO
53-37Z NA01-53-37ZB	1	FRAME(UP.R),FRONT-RE AR	CHASSIS(SUP.D),AV-AR		
53-370A NA01-53-370A	1	GUSSET(R),FRONT FRAM E	GOUSSET(D),CHASSIS A V		
53-371 NC10-53-390A	1	FRAME(R),BUMPER-F.SI DE	CHASSIS(D),AMORTISS. -AVA.		
53-371Z NC10-54-390A	1	FRAME(L),BUMPER-F.SI DE	CHASSIS(G),AMORTISS. AVA.		
53-391 NA01-53-391	1	BOX(R),TORQUE	BOITIER (D), COUPLE MOTEUR		
53-59X NA01-53-591	1	REINF.(R),WHEEL APRO N	RENFORT(D),TABLIER		
53-59XZ NA01-54-590	1	REINF.(L),WHEEL APRO N	RENFORT(G),TABLIER		
53-883 NA01-53-32XB	1	REINF.(R),TIE DOWN H OOK	RENFORT(D),CROC FIXA T SOL		
54-210 NCY0-54-200B	1	PANEL(L),APRON & FRA ME	PASSAGE DE ROUE (G)		
54-31X N066-54-31X	1	FRAME(L),FRONT	CADRE(G),AVANT		
54-320C NC10-54-320	1	FRAME(L),SIDE-FRONT	CADRE(G),LATERALF-AV ANT.		
54-330A N067-54-330	1	BRACKET(L),STABILIZE R	SUPPORT(G),STABILIZA T.		
54-37Z NA01-54-37ZD	1	FRAME(UP.L),FRONT-RE AR	CHASSIS(SUP.G),AV-AR		
54-370 NA01-54-370A	1	GUSSE(L),FRONT FRAM E	GOUSSET(G),CHASSIS A V		

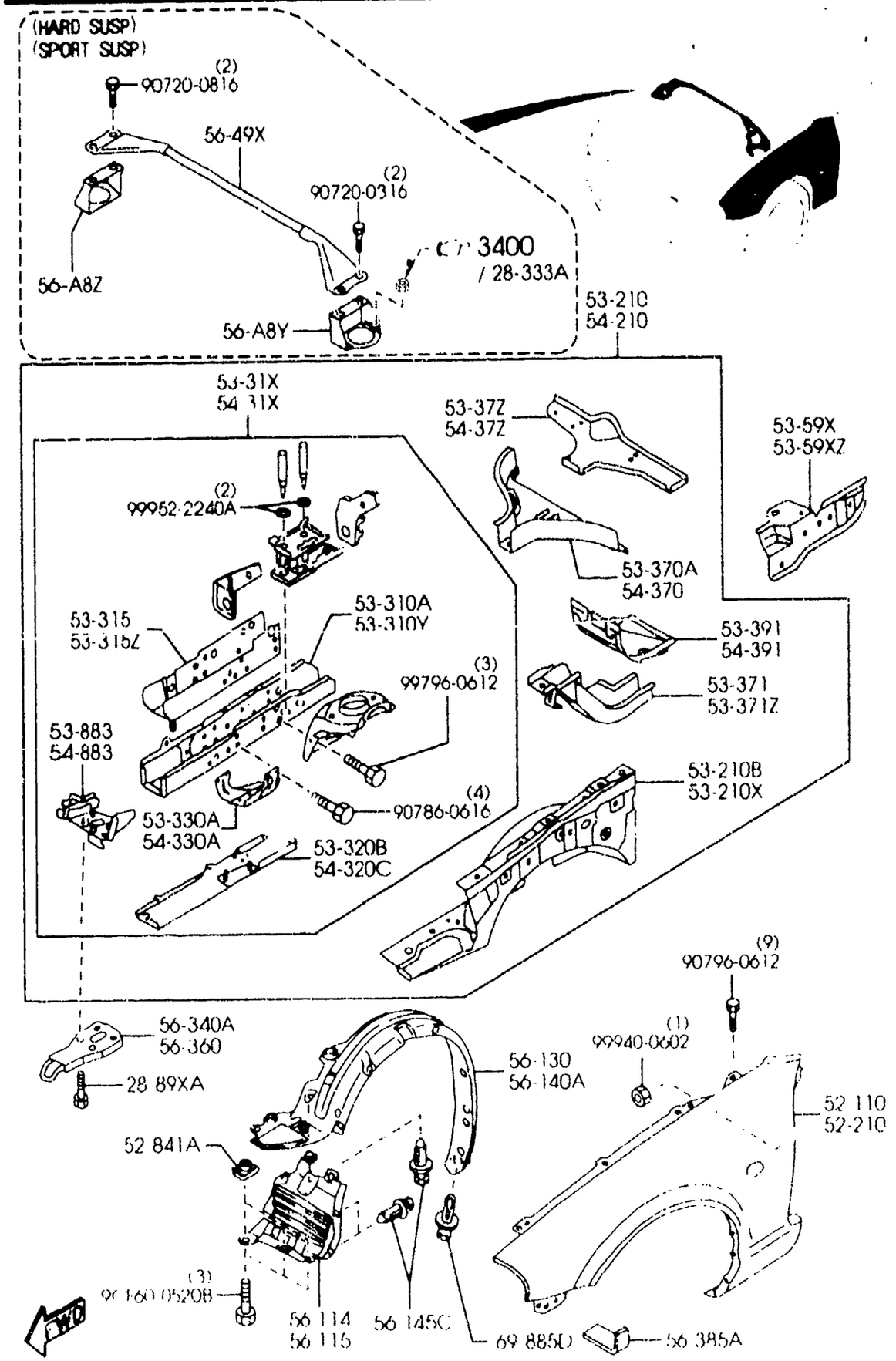

PART NO.	QTY	MODEL/RESTRICTION	MODEL/RESTRICTION	MODEL/RESTRICTION	FROM-TO
54-391 NA01-54-391	1	BOX(L),TORQUE	BOITIER (G), COUPLE MOTEUR		
54-883 NA01-54-32XC	1	REINF.(L),TIE DOWN HOOK	RENFORT(G),CROC FIXAT.SOL		
56-A8Y N[illegible]-56-49YA	1	BRKT(L),STRUT BAR (HARD SUSP) (SPORT SUSP)	CONSOLE(G),BARRE ENTRETO. (SUSP.FERM) (SUSP. SPORTIVE)		
56-A8Z N067-56-49ZA	1	BRKT(R),STRUT BAR (HARD SUSP) (SPORT SUSP)	CONSOLE(G),BARRE ETRETO. (SUSP.FERM) (SUSP. SPORTIVE)		
56-114 N067-56-132	1	GUARD(R),MUD	GARDE-BOUD(D)		
56-115 N067-56-142	1	GUARD(L),MUD	GARDE-BOUE(G)		
56-130 NC10-56-131F	1	GUARD(R),MUD	GARDE-BOUD(D)		
56-140A NC10-56-141F	1	GUARD(L),MUD	GARDE-BOUE(G)		
56-145C BC1D-56-145	34	CLIP,MUD GUARD	ETRIER,GARDE BOUE		
56-340A NA01-56-34XC	1	HOOK(R),TIE DOWN-FRONT	CROCHET AV(D),CONNE		
56-360 NA01-56-34YC	1	HOOK(L),TIE DOWN-FRONT	CROCHET(G),CONNEX INF,ARR		
56-385A GA2A-56-092	2	TAPE,SEAL-F.FENDER	RUBAN,ETANCHE-P.CHOCS AV.		
56-49X N067-56-49XA	1	BAR,STRUT (HARD SUSP) (SPORT SUSP)	BARE,RENFORT-TABLIER ROUE (SUSP.FERM) (SUSP. SPORTIVE)		

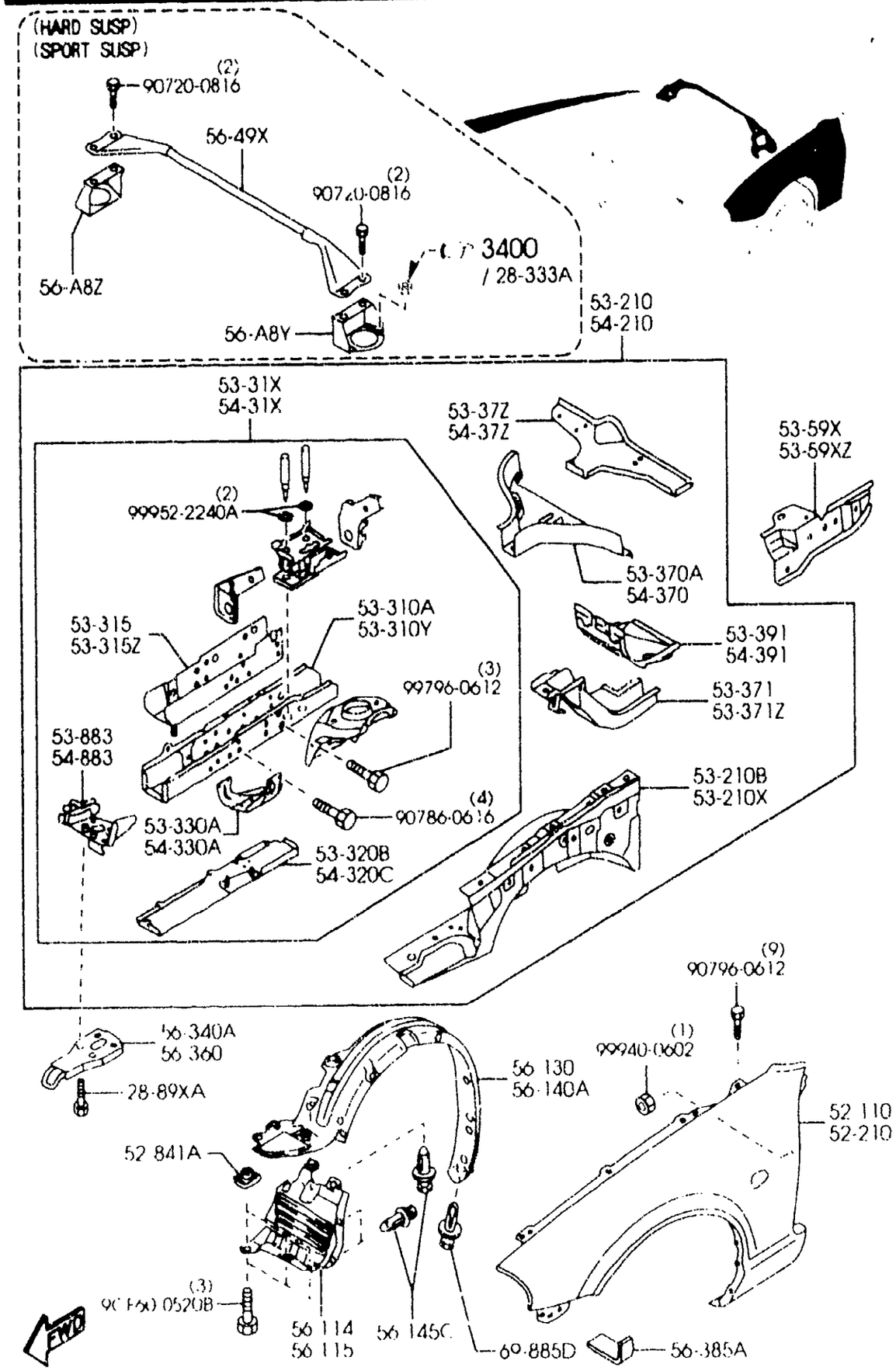

PART NO.	QTY	MODEL/RESTRICTION	MODEL/RESTRICTION	MODEL/RESTRICTION	FROM-TO
69-885D		FASTENER	AGRAFE		
NA01-56-145	2				

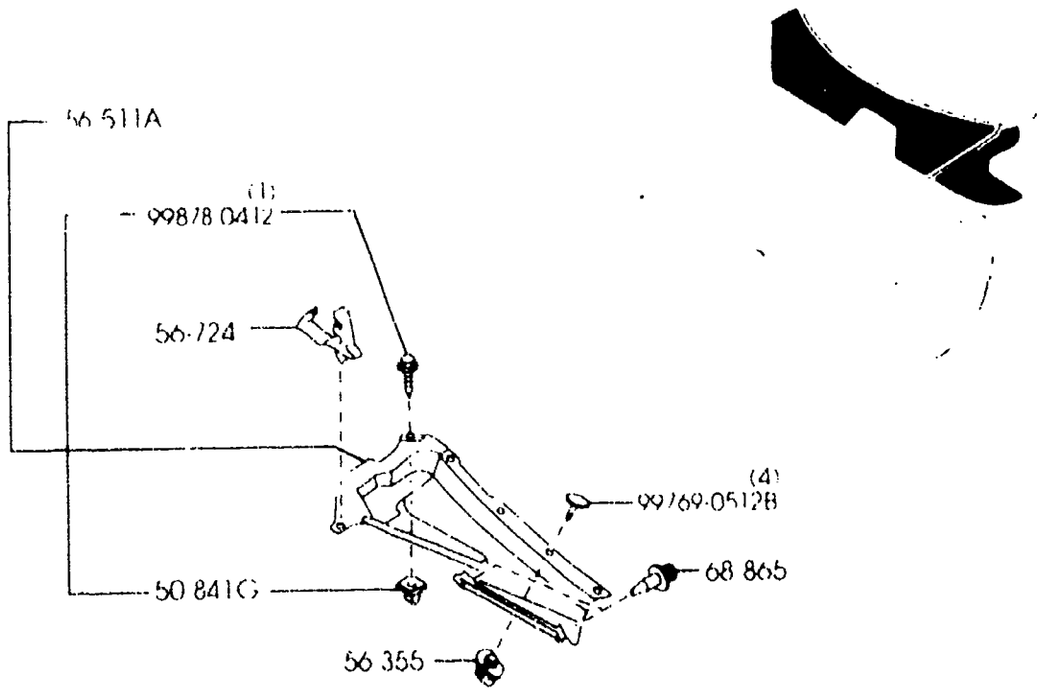

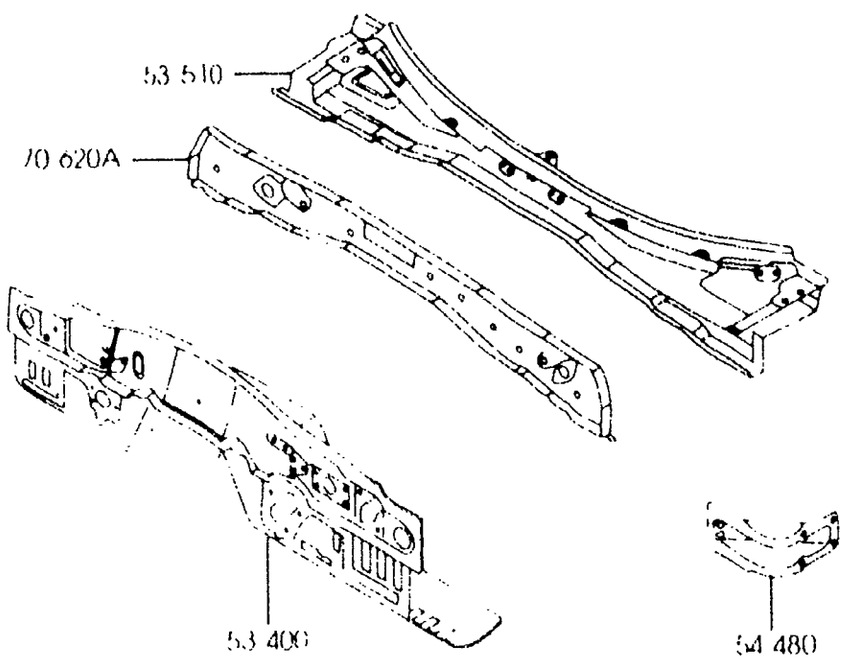

PART NO.	QTY	MODEL/RESTRICTION	MODEL/RESTRICTION	MODEL/RESTRICTION	FROM-TO
50-841G F044-51-912	1	GROMMET SCREW	ANNEAU		
53-400 NC10-54-400B	1	PANEL,DASH-LOWER	TRAVERSE INFERIEURE		
53-510 NC10-53-510A	1	PANEL,DASH-UPPER	TRAVERSE SUPERIEURE		
54-480 NA01-54-480B	2	JUNCTION,DASH SIDE-S .SILL	RACCORD,COTE TAB.-M. PIED		
56-355 G211-56-355A	4	GROMMET,SCREW-BAFFLE	BAGUE,VIS-CHICANE		
56-511A NA01-56-35X	1	COVER,BAFFLE-COWL PA NEL	COUVERCLE,CHICANE-P/ CAPOT		
56-724 NC10-56-833	1	CLIP'B',WIRE-BONNET	COLLIER'B',CABLE-CAP OT		
68-865 N067-68-865	2	FASTENER	AGRAFE		
70-620A NA01-70-62YD	1	PANEL,COWL-FRONT	PANNEAU,CAPOTAGE,AV		

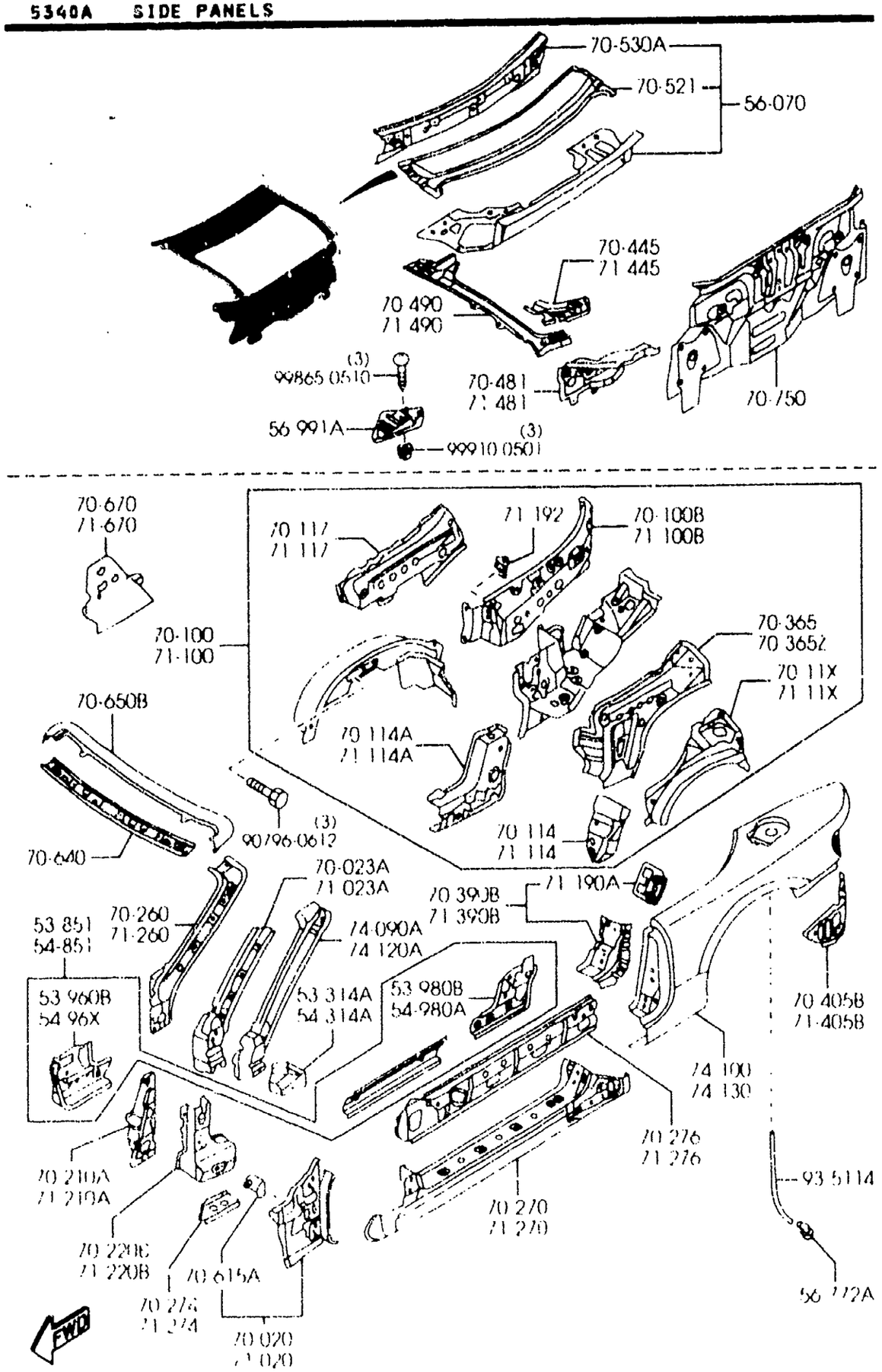

PART NO.	QTY	MODEL/RESTRICTION	MODEL/RESTRICTION	MODEL/RESTRICTION	FROM-TO
53-314A NA01-70-071A	1	BRACKET(R),INST.	SUPPORT INSTRUMENTS(D)		
53-851 N067-53-971A	1	REINF(R),ANCHORAGE	RENFORT PT ATTACHE(D)		
53-960B N067-53-95XA	1	SILL(FRT.R),SIDE-INNER	MARCHE PIED(AV.D),LAT-INT		
53-980B N067-53-95ZA	1	SILL(RR.R),SIDE-INNER	MARCHE-PIED(AR.D),LAT-INT		
54-314A NA01-71-071A	1	BRACKET(L),INST.	SUPPORT INSTRUMENTS(G)		
54-851 N067-54-971A	1	REINF(L),ANCHORAGE	RENFORT PT ATTACHE(G)		
54-96X N067-54-95XA	1	SILL(FRT.L),SIDE-INNER	MARCHE-PIED(AV.G),LAT-INT		
54-980A N067-54-95ZA	1	SILL(RR.L),SIDE-INNER	MARCHE-PIED(AR.D),LAT-INT		
56-070 NC10-70-50Y	1	PANEL,BULK HEAD	PANNEAU RENFORT AV.		
56-772A NC10-56-481A	1	PIPE,DRAIN-RR FENDER	TUYAU,VIDANGE-P.CHOCS AR		
56-991A NA01-56-971	1	COVER,SERVICE HOLE	CHAPEAU, ORIFICE DE VISITE		
70-020 N067-70-020	1	PANEL(R),COWL SIDE	ARMATURE DE COTE (D)		
70-023A N067-70-244	1	REINF(R),F.PILLAR	RENFORCE.(R)MONTANT-AVANT		
70-100 N067-70-100	1	PANEL(R),QUARTER	MONTANT (D) ARR.		

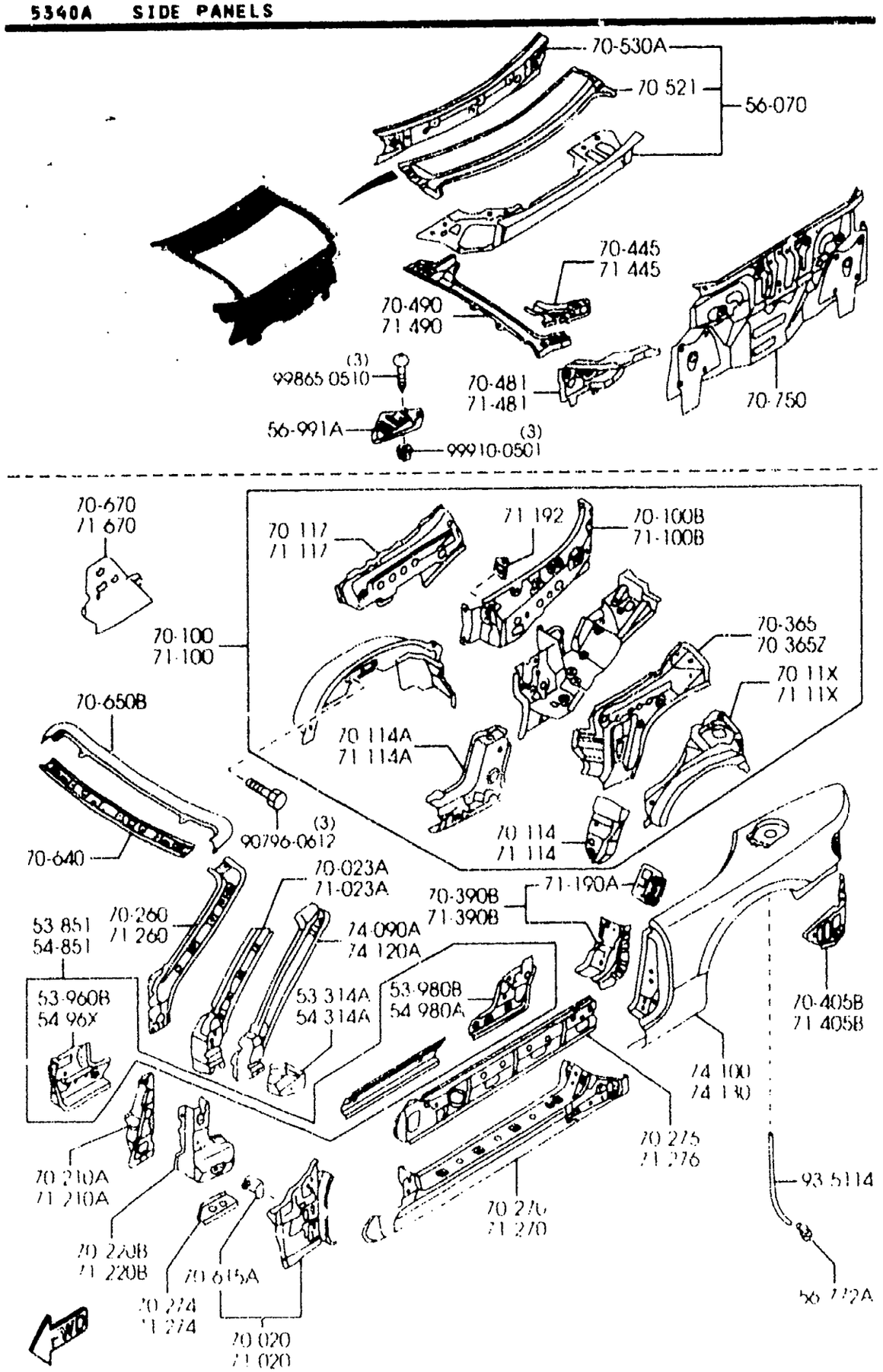

PART NO.	QTY	MODEL/RESTRICTION	MODEL/RESTRICTION	MODEL/RESTRICTION	FROM-TO
70-100B NA01-70-19XF	1	PANEL(R),INSIDE	PANNEAU INTERIEUR (D)		
70-11X NCY0-70-11X	1	PILLAR(R),REAR-INNER	PILIER(D),AR.-INT		
70-114 NC10-70-112A	1	PLATE(R),END	FLASQUE ARR (D)		
70-114A NC10-70-1AXA	1	JUNCTION(R),CORNER	RACCORD.(D),COIN-Q/PAN.		
70-117 NC10-70-117A	1	REINF.(R),QUARTER PANEL	RENFORT(D),PANNEAU QUART		
70-210A NA01-70-230C	1	PILLAR(R),HINGE	MONTANT (D), CHARNIERE		
70-220B N067-70-280	1	REINF.(R),HINGE-UPPER	ARAMATURE CHANIERE(D)-SUP		
70-260 NC10-70-240A	1	PILLAR(R),FRT.-INNER	MONTANT (D), AVANT INTERI		
70-270 NC10-70-270D	1	PANEL(R),SIDE SILL	LONGERON EXT. (D)		
70-274 NA01-70-274	1	GUSSET(R),SIDE SILL OUTER	GOUSSET(D),M.PIED LAT EXT		
70-276 NC10-70-272A	1	REINF.(R),SIDE SILL	RENFORT		
70-365 NA01-70-116D	1	REINF.(R),BELT LINE-C.PIL	RENFORT(D),		
70-365Z NA01-71-116F	1	REINF.(L),BELT LINE-C.PIL	RENFORT(G),		
70-390B NC10-70-460B	1	REINF.(R),STRIKER	RENFORT(D),GACHE		

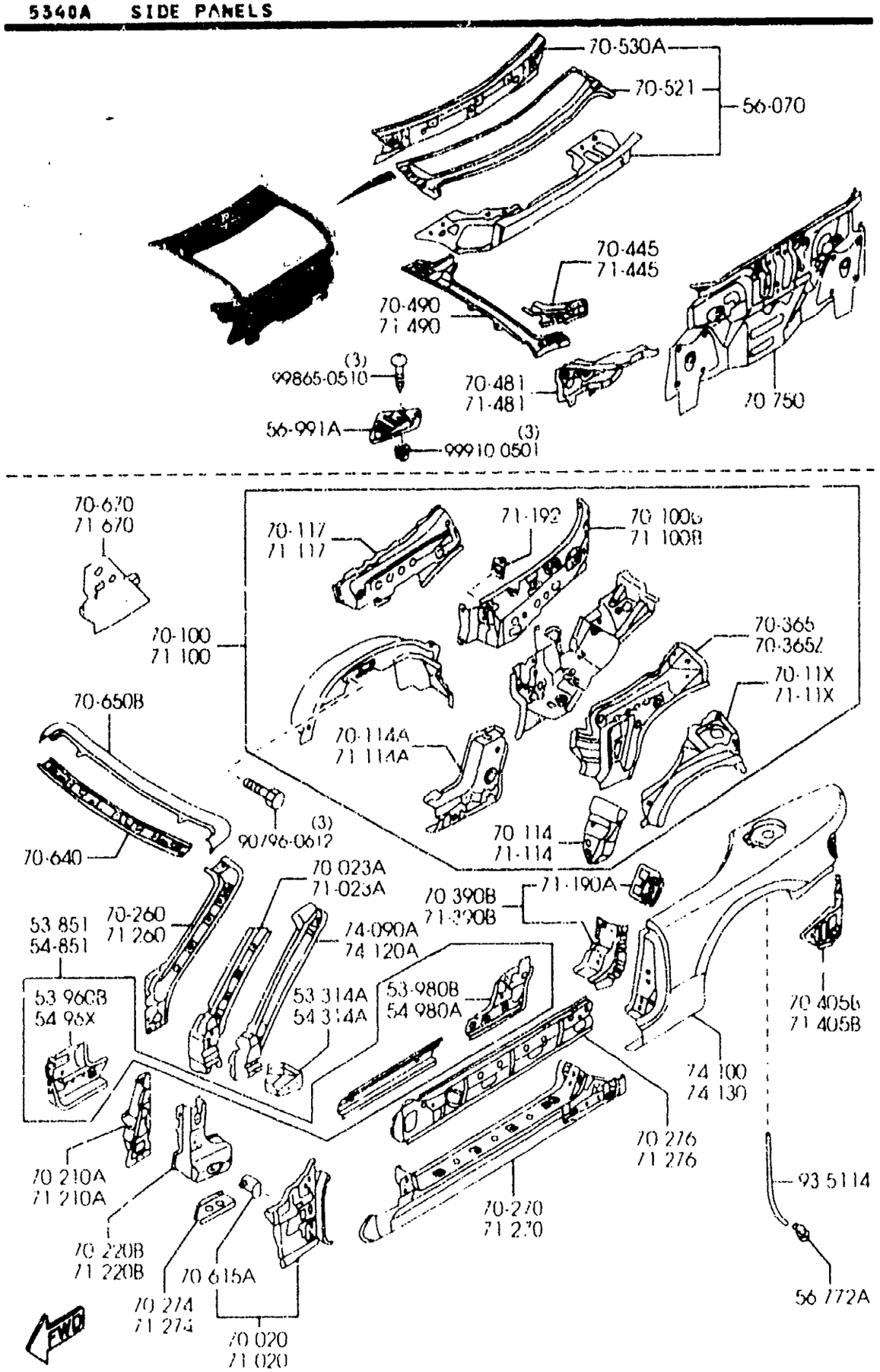

AUNA08

PART NO.	QTY	MODEL/RESTRICTION	MODEL/RESTRICTION	MODEL/RESTRICTION	FROM-TO
70-405B NCY0-70-4A0	1	PANEL(R),RR FENDER-LOWER	PANNEAU(D),PARE-CHOCS AR		
70-445 NC10-70-4A5B	1	GUSSET(R),REAR FENDER-RR	GOUSSET(D),GARDE BOUE AR		
70-481 NC10-70-481B	1	PLATE(R),CORNER	PLAQUE DE COIN(D)		
70-490 NC10-70-440A	1	RAIL(R),RAIN-REAR	GOUTTIERE ARR.(D)		
70-521 NA01-70-521B	1	PANEL,REAR DECK	PANNEAU,COUVERTURE AR		
70-530A NA01-70-530D	1	MEMBER,REAR DECK	MEMBRE,COUVERTURE AR		
70-615A B092-70-070A	2	BRACKET,FENDER	SUPPORT		
70-640 NB38-70-640A	1	HEADER,FRONT	RENFORT,AVT.		
70-650B NA01-70-650	1	HEADER,FRONT-UPPER	COLLECTEUR,AV.-SUP.		
70-670 N067-70-670	1	PLATE(R),CLOSING-QTR PANEL	PLAQUE(D),FERMET.-PAN.QRT		
70-750 NC10-70-750E	1	PANEL,REAR END	JUPE ARRIERE		
71-020 N067-71-020	1	PANEL(L),COWL SIDE	ARMATURE DE COTE (G)		
71-023A N067-71-244	1	REINF(L),F.PILLAR	RENFORT(G),PILIER AV.		
71-100 N067-71-100	1	PANEL(L),QUARTER	MONTANT (G) ARR		

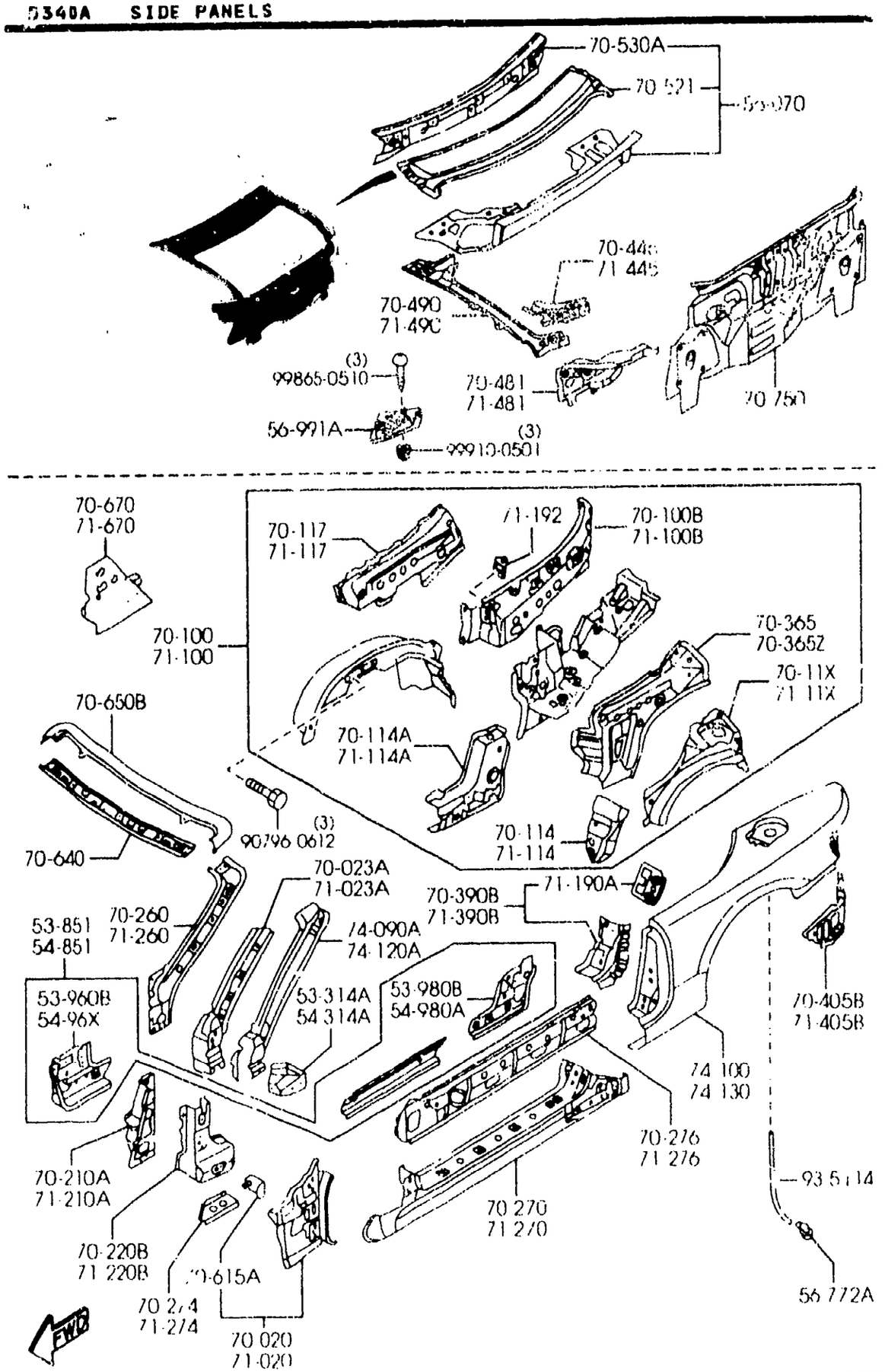

AUNA08

PART NO.	QTY	MODEL/RESTRICTION	MODEL/RESTRICTION	MODEL/RESTRICTION	FROM-TO
71-190B NA01-71-19XF	1	PANEL(L),INSIDE	PANNEAU INTERIEURE (G)		
71-11X NCY0-71-11X	1	PILLAR(L),PLAR INNER	PILIER(G),INT AR.-AR		
71-114 NC10-71-112A	1	PLATE(L),END	PLASQUE (G)		
71-114A NC10-71-1AXA	1	JUNCTION(L),CORNER	PACCORD.(G),COIN-Q/PAN.		
71-117 NC10-71-117A	1	REINF.(L),QUARTER PANEL	RENFORT(G),PANNEAU QUART		
71-190A GE4T-70-46X	2	PLATE,NUT	PLASQUE,ECROU		
71-192 NA01-71-192	2	BRKT,CAP QUARTER PANEL	SUPPORT,CAPOT-PANN. QUART		
71-210A NA01-71-210C	1	PILLAR(L),HINGE	MONTANT DE CHARNIERE		
71-220B NG67-71-280	1	REINF(L).HINGE-UPPER	ARMATURE CHARNIERE(G)-SUP		
71-260 NC10-71-240A	1	PILLAR(L),FRT.-INNER	MONTANT INTERIEUR (G), AV		
71-270 NC10-71-270D	1	PANEL(L),SIDE SILL	PANNEAU(G),SEUIL LATERAL		
71-274 NA01-71-274	1	GUSSET(L),SIDE SILL OUTER	GOUSSET(G),M.PIED LAT EXT		
71-276 NC10-71-272A	1	REINF.(L),SIDE SILL	RENFORT		
71-390B NC10-71-460B	1	REINF.(L),STRIKER	RENFORT(G),GACHE		

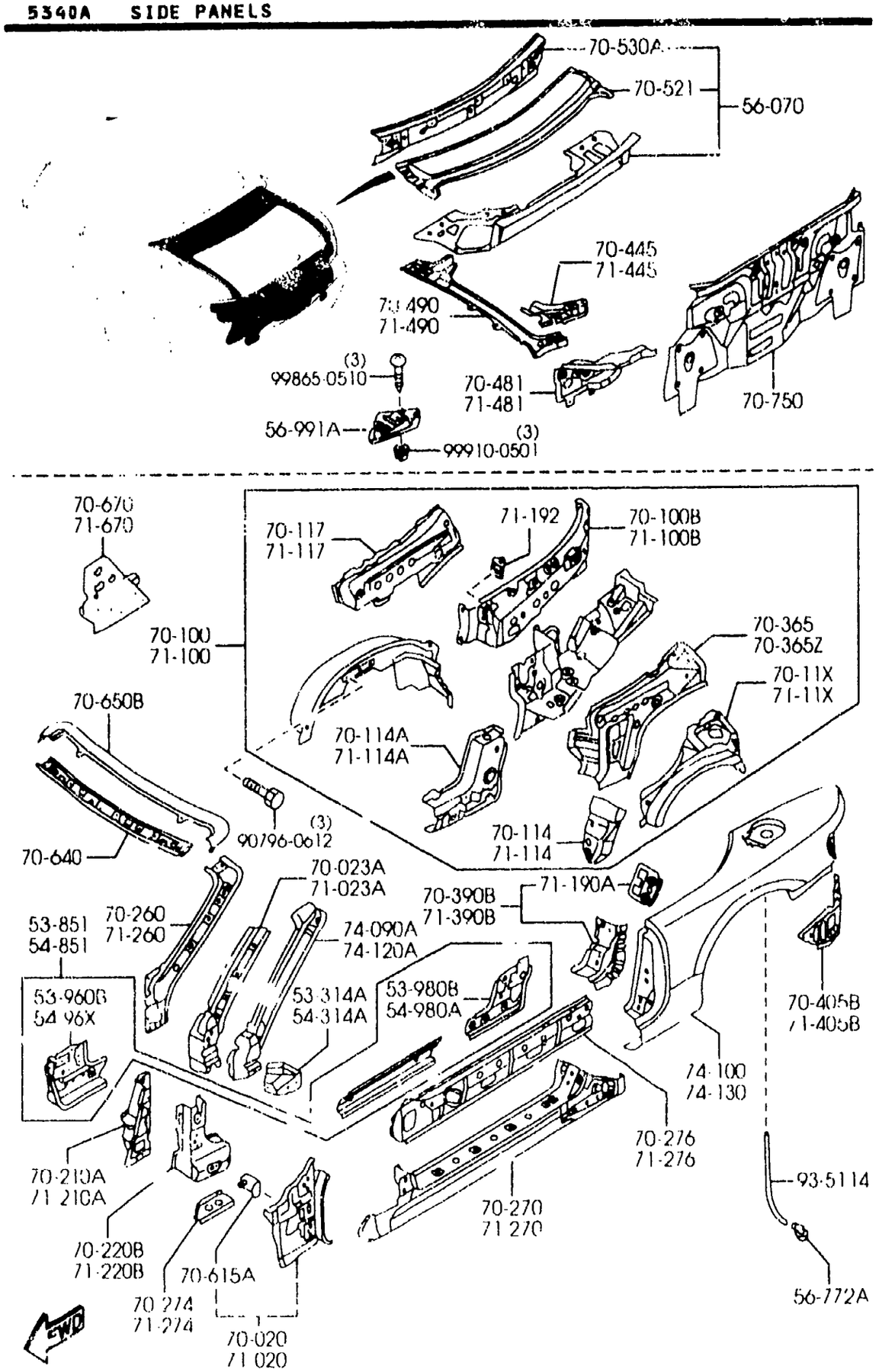

PART NO.	QTY	MODEL/RESTRICTION	MODEL/RESTRICTION	MODEL/RESTRICTION	FROM-TO
71-405B NC10-71-4A1B	1	PANEL(L),RR FENDER-LOWER	PANNEAU(G),P.CHOCS AR-INF		
71-445 NC10-71-4A5B	1	GUSSET(L),REAR FENDER-RR	GOUSSET(G),GARDE BOUE AR		
71-481 NC10-71-481B	1	PLATE(L),CORNER	PLAQUE COIN(G)		
71-490 NC10-71-440A	1	RAIL(L),RAIN-REAR	GOUTTIERE ARR.(G)		
71-670 N067-71-670	1	PLATE(L),CLOSING-QTR PANEL	PLAQUE(G),FERMET.-PAN.QRT		
74-090A N067-70-210	1	PILLAR(R),FRONT-OUT.	MONTANT EXT,AV(D)		
74-100 NCY0-70-400A	1	PANEL(R),FENDER-REAR	AILE ARRIERE (D)		
74-120A N067-71-210	1	PILLAR(L),FRONT-OUT.	MONTANT EXT.AV(G)		
74-130 NCY0-71-400A	1	PANEL(L),FENDER-REAR	AILE ARRIERE (G)		
93-5114 99351-14999	1	HOSE L=1M CUT IT TO USE	FLEXIBLE ESSENCE L=1M CUT IT TO USE		

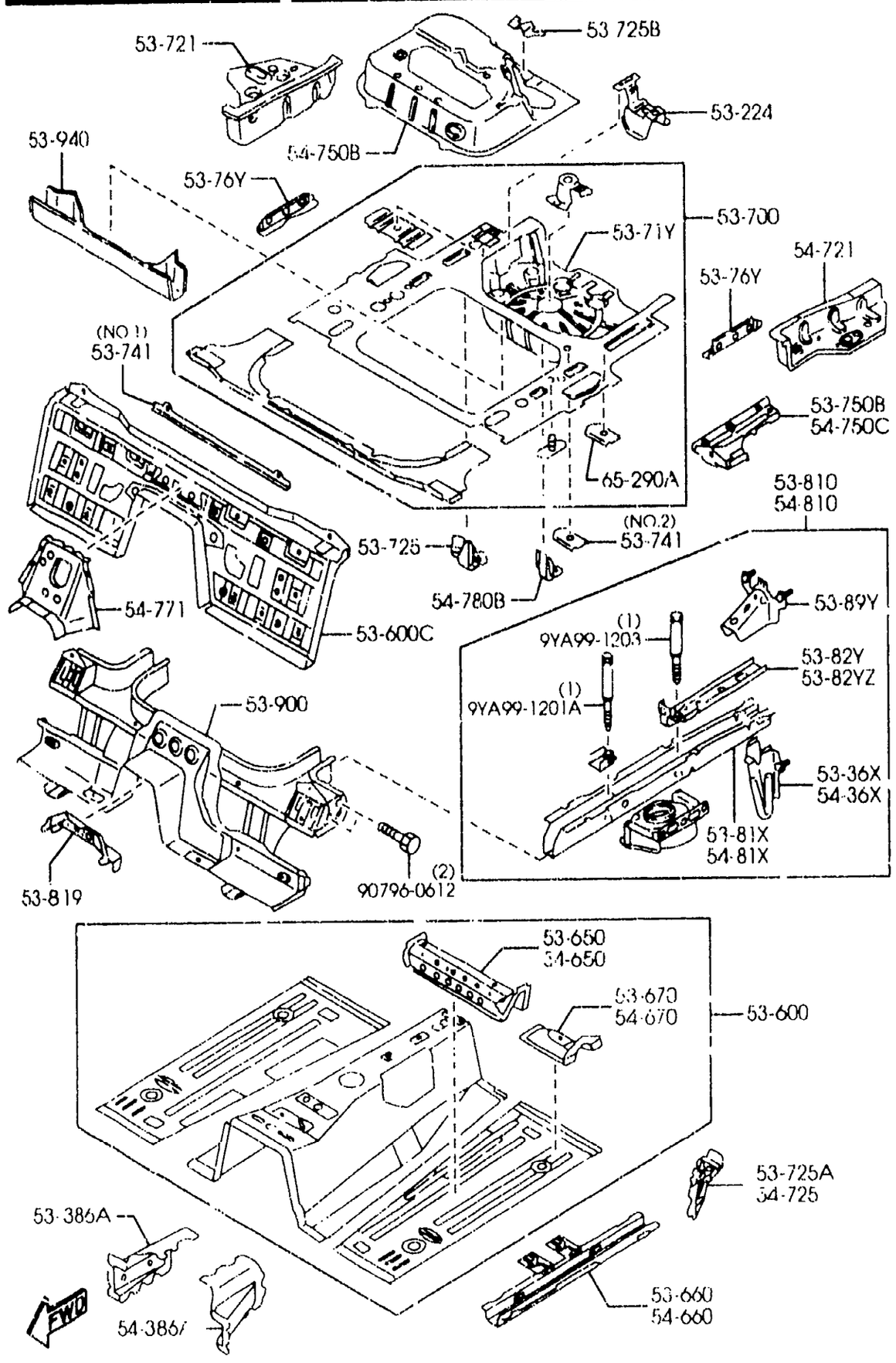

AUNA08

PART NO.	QTY	MODEL/RESTRICTION	MODEL/RESTRICTION	MODEL/RESTRICTION	FROM-TO
53-224		BRACKET,JACK	SUPPORT CRIC		
N067-53-79XB	1				
53-36X		BRACKET(R),TIE DOWN HOOK	SUPPORT(D),CROCH. PO . SOL		
NC10-53 890A	1				
53-386A		JUNCTION(R)	JONCTION(D)		
NC10-53-482B	1				
53-600		PAN,FLOOR-FRONT	PLANCHER AVANT		
NC72-53-600	1				
53-600C		PAN,FLOOR-CENTER	CUVETTE CENTRALE,PLA NCHER		
N067-53-720A	1				
53-650		MEMBER NO.2(R),CROSS -FLOOR	TRAVERSE NO.2(D),PLA NC.		
NA01-53-650A	1				
53-660		FRAME'B'(R),FRONT	CADRE AR(D),		
N067-53-660 AN(N067-53-660A)	1				-0A06
N067-53-660A	1				0A06-
53-670		BRKT(R),SEAT-F.FLOOR PAN	SUPPORT(D),SIEGE-BUT EE P.		
NA01-53-670A	1				
53-700		PAN,FLOOR-REAR	PLANCHER ARRIERE		
NCY0-53-710A	1				
53-71Y		PAN,FLOOR-REAR	PLANCHER ARRIERE		
N067-53-71YA	1				
53-721		PANEL(R),SIDE-FLOOR	PANNEAU LATERAL(D),		
NC10-53-741B	1				
53-725		BRACKET	ATTACHE		
NC10-53-760C	1				
53-725A		GUSSET NO.3(R),C.FLO OR PAN	GOUSSET NO.3(D),BUTE E PLN		
NA01-53-725A	1				

0A06 NB35XN-204932

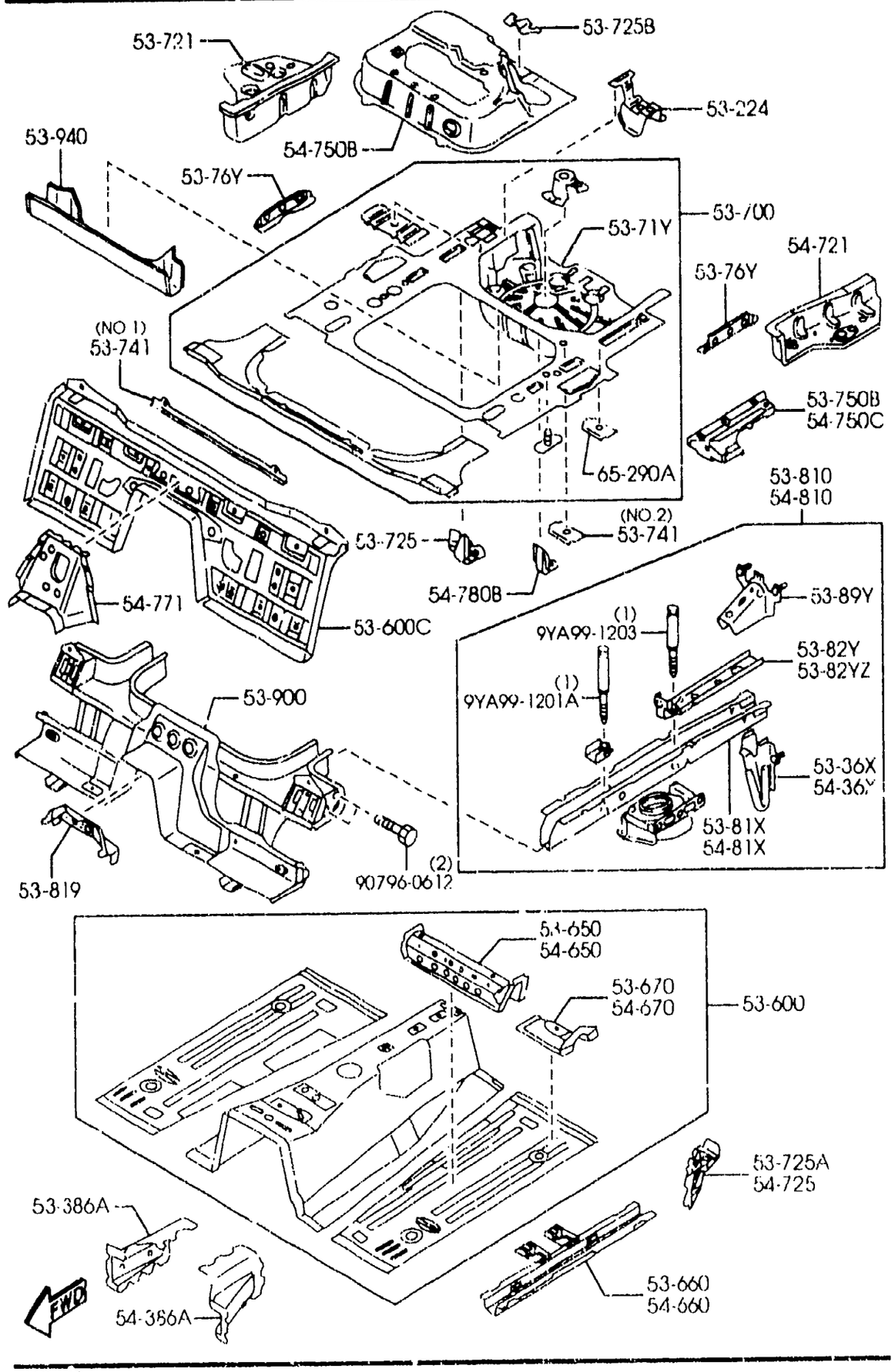

PART NO.	QTY	MODEL/RESTRICTION	MODEL/RESTRICTION	MODEL/RESTRICTION	FROM-TO
53-725B		REINFORCEMENT	RENFORT		
NC10-53-718	1				
53-741		REINFORCEMENT	RENFORT		
NC10-53-726	1	(ILLUST. NO.1)			
S131-53-990	1	(ILLUST. NO.2)			
53-750B		PLATE(R),SIDE-REAR FLOOR	PLAQUE(D),COTE-PLANC. AR		
NA01-53-750B	1				
53-76Y		PLATE,NUT-TRUNK FLOOR PAN	PLAQUE,ECROU-PLAN. COFFRE		
NA01-53-760B	2				
53-81X		FRAME(R),REAR SIDE-UPPER	CADRE(D),AR LAT.-SUP.		
NC10-53-811A	1				
53-810		FRAME(R),REAR SIDE	ARMATURE (D), COTE AR.		
NC10-53-810F	1				
53-819		BRACKET,PARKING CABLE-FLOOR	SUPPORT,CABLE STATION.-PL		
NA01-53-819	1				
53-82Y		REINF(R),REAR FRAME	RENFORT(D),CADRE AR		
NC10-53-82Z	1				
53-82YZ		REINF(L),REAR FRAME	RENFORT(G),CADRE AR		
NC10-54-82Z	1				
53-89Y		BRKT(R),RR BUMPER-LOWER	CONSOLE(D),P-CHOCS AR-INF		
NC10-53-89XA	2				
53-900		MEMBER NO.3,CROSS	TRAVERSE NO 3		
NC72-53-900A	1				
53-940		MEMBER NO.4,CROSS	TRAVERSE NO 4		
NC10-53-931	1				
54-36X		BRACKET(L),TIE DOWN HOOK	SUPPORT(G),CROCH. PO. SOL		
NC10-54-890A	1				

5370A FLOOR PANELS

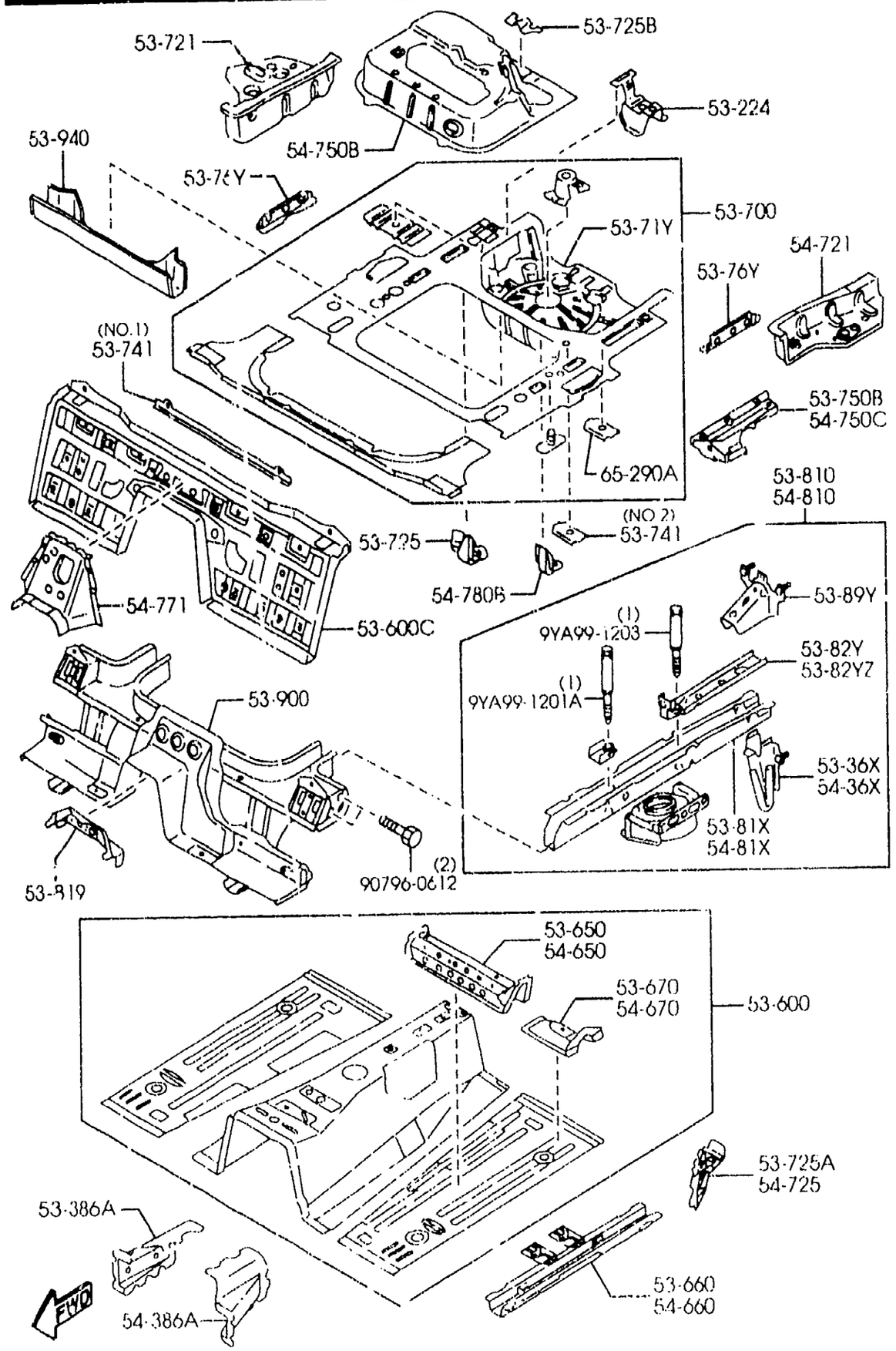

PART NO.	QTY	MODEL/RESTRICTION	MODEL/RESTRICTION	MODEL/RESTRICTION	FROM-TO
54-386A NC10-54-482B	1	JUNCTION(L)	JONCTION(G)		
54-650 NA01-54-650A	1	MEMBER NO.2(L),CROSS -FLOOR	TRAVERSE NO.2(G),PLA NC.		
54-660 N067-54-660 AN(N067-54-660A)	1	FRAME'B'(L),FRONT	CADRE AR(G),		-0A06
N067-54-660A	1				0A06-
54-670 NA01-54-670A	1	BRKT(L),SEAT-F.FLOOR PAN	SUPPORT(G),SIEGE-BUT EE P.		
54-721 NC10-54-741A	1	PANEL(L),SIDE-FLOOR	PANNEAU LATERAL(G),		
54-725 NA01-54-725A	1	GUSSET NO.3(L),C.FLO OR PAN	GOUSSET NO.3(G),BUTE E PLA		
54-750B N067-53-71X	1	MEMBER NO.3,UPPER-F. FLOOR	MEMBRE NO.3,SUP.-PLA N. AV		
54-750C NA01-54-750B	1	PLATE(L),SIDE-REAR F LOOR	PLAQUE(G),COTE-PLANC . AR		
54-771 N067-54-770A	1	GUSSET	GOUSSET		
54-780B NA01-54-780	1	BRKT(L),FUEL TANK'B'	CONSOLE(G),RESERV. C ARB.B		
54-81X NC10-54-811A	1	FRAME(L),REAR SIDE-U PPER	CADRE(G),AR LAT.-SUP .		
54-810 NC10-54-810F	1	FRAME(L),REAR SIDE	ARMATURE (G), COTE A R.		
65-290A 1353-65-190	1	BRACKET	SUPPORT		

0A06 NB35**-204932

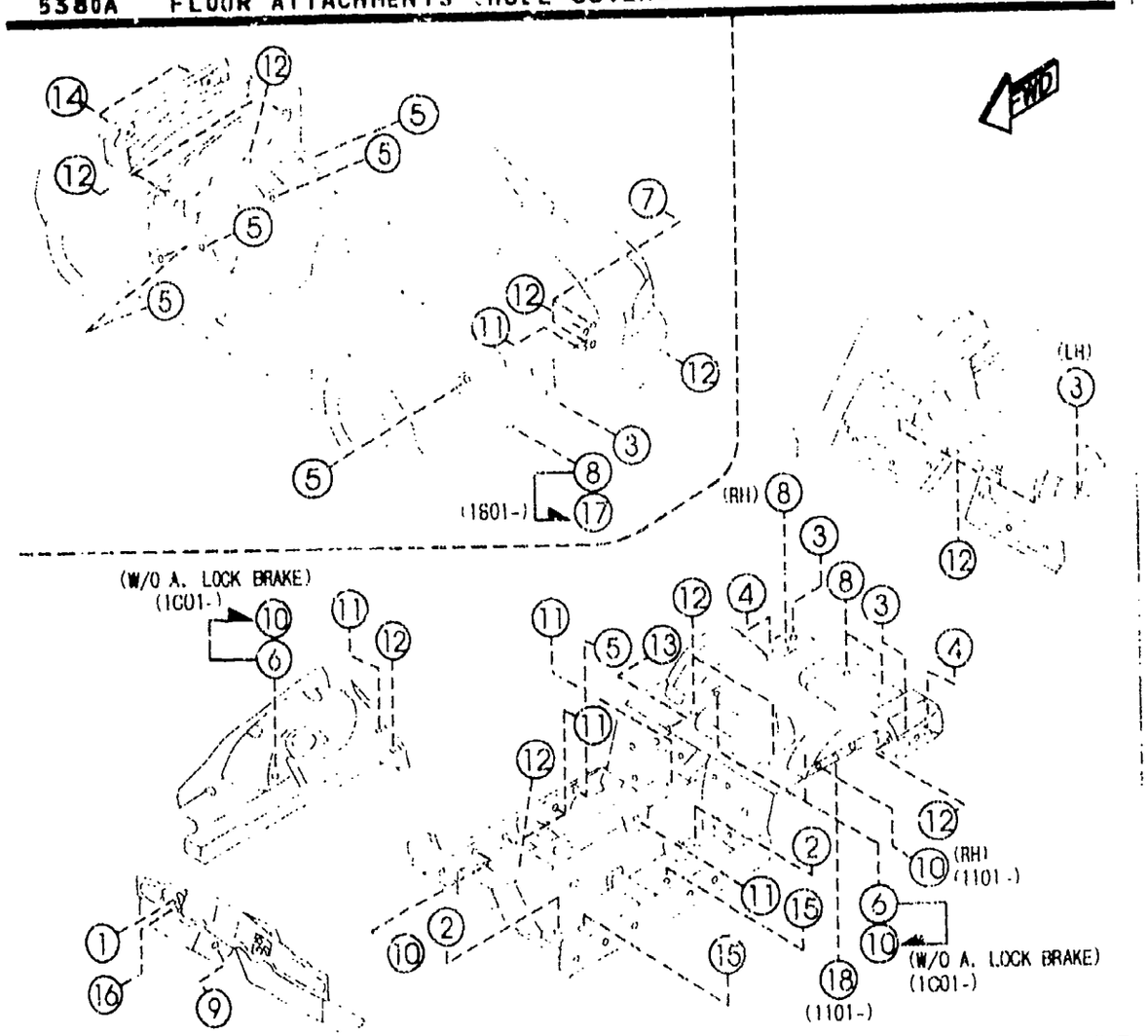

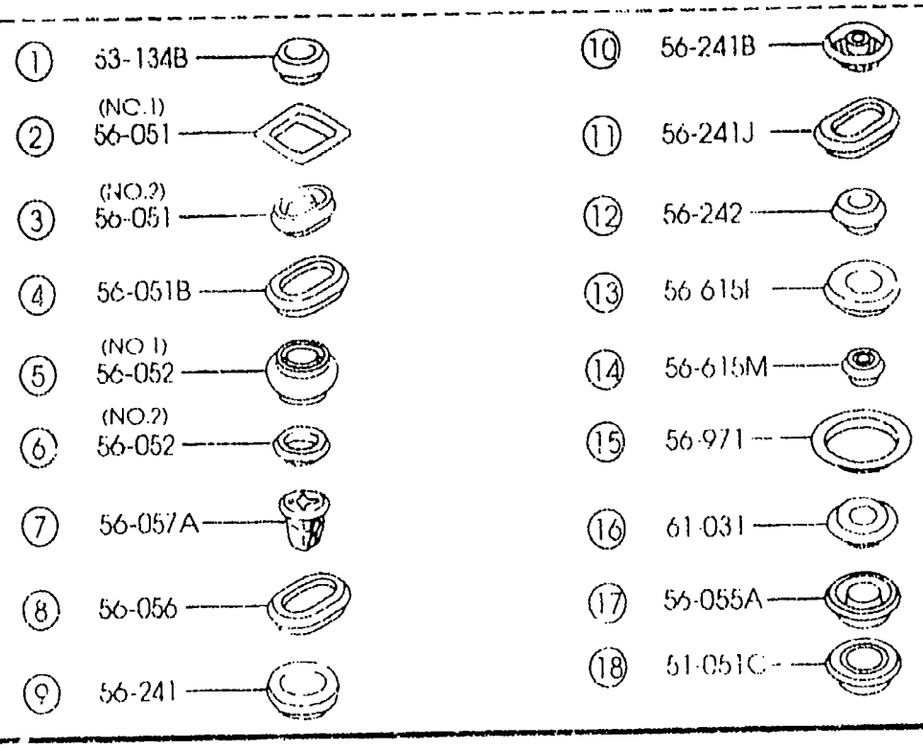

PART NO.	QTY	MODEL/RESTRICTION	MODEL/RESTRICTION	MODEL/RESTRICTION	FROM-TO
51-051C		PLUG,HOLE	BOUCHON D'ORIFICE		
BR70-51-264	1				1101-
53-134B		RUBBER,DUST SEAL	CAOUTCHOUC,		
0187-53-134	1	(W/O AIR CON.)			
56-051		COVER,HOLE	BOUCHON		
1C11-56-051	4	(ILLUST. NO.1)			
BC1D-56-052	4	(ILLUST. NO.2)			
56-051B		COVER,HOLE	COUVERCLE,TROU		
GA5 -56-051	2				
56-052		PLUG,DRAIN	BOUCHON DE VIDANGE		
B092-56-052	8	D=12MM (ILLUST. NO.1)	D=12MM		
FB01-56-056	4	(ILLUST. NO.2) (W/O A. LOCK BRAKE)	(S/SYST ANTIBLOC)		-1C01
56-055A		GROMMET	ANNEAU		
A001-56-053	2				1801-
56-056		COVER,HOLE	COUVERCLE,TROU		
T001-56-053	3				-1801
T001-56-053	3				1801-
56-057A		GROMMET,SCREW	ANNEAU VIS		
NC10-56-057	2				
56-241		PLUG,DRAIN	BOUCHON DE VIDANGE		
0118-56-241	1	(W/O AIR CON.)			
56-241B		PLUG	BOUCHON		
B001-56-051	4				-1101
B001-56-051	5	(W/A. LOCK BRAKE)	(SYST ANTIBLOC)		1101-
B001-56-051	5	(W/O A. LOCK BRAKE)	(S/SYST ANTIBLOC)		1101-1C01
B001-56-051	9	(W/O A. LOCK BRAKE)	(S/SYST ANTIBLOC)		1C01-
56-241J		PLUG,DRAIN	BOUCHON DE VIDANGE		
8477-56-241	9				

1101 NB35**-208709
1801 NB35**-220738
1C01 NB35**-223944

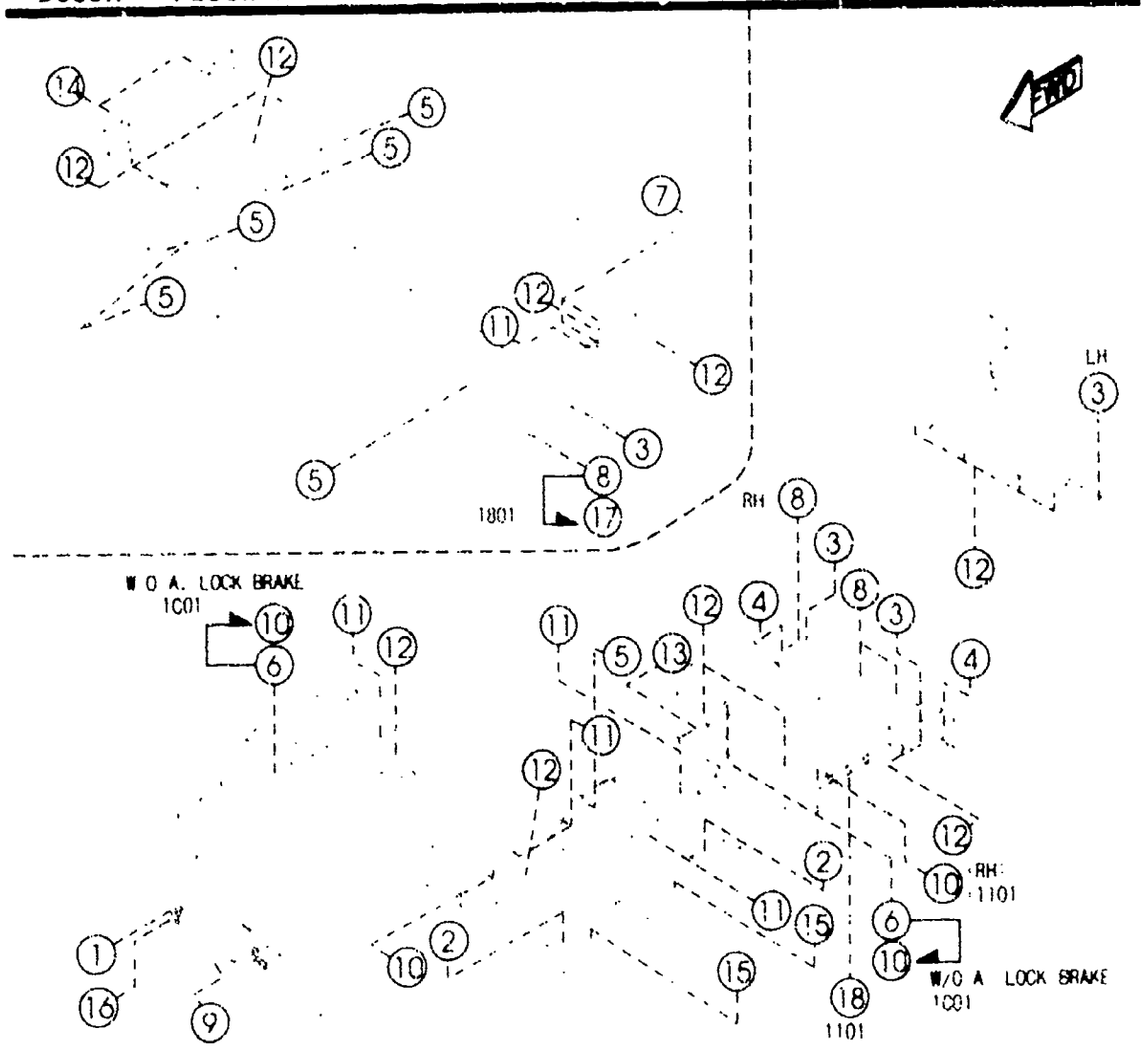

(1) 53-134B		(10) 56-241B			
(2) (NO 1) 56-051		(11) 56-241J			
(3) (NO 2) 56-051		(12) 56 242			
(4) 56 051B		(13) 56 615F			
(5) (NO 1) 56 052		(14) 56 615M			
(6) (NO 2) 56 052		(15) 56 971			
(7) 56 057A		(16) 61 031			
(8) 56 056		(17) 56 055A			
(9) 56 241		(18) 51 051C			

PART NO.	QTY	MODEL/RESTRICTION	MODEL/RESTRICTION	MODEL/RESTRICTION	FROM-TO
56-242		PLUG,DRAIN	BOUCHON DE VIDANGE		
0119-56-242B	15				
56-615F		PLUG,DRAIN	BOUCHON DE VIDANGE		
0208-56-615	2				
56-615M		PLUG,DRAIN	BOUCHON DE VIDANGE		
NA01-56-051	2				
56-971		COVER,HOLE	BOUCHON		
0866-56-971	4				
61-031		PLUG,HOLE	BOUCHON D'ORIFICE		
1708-61-031	1	(W/O AIR CON.)			

5390A FLOOR ATTACHMENTS

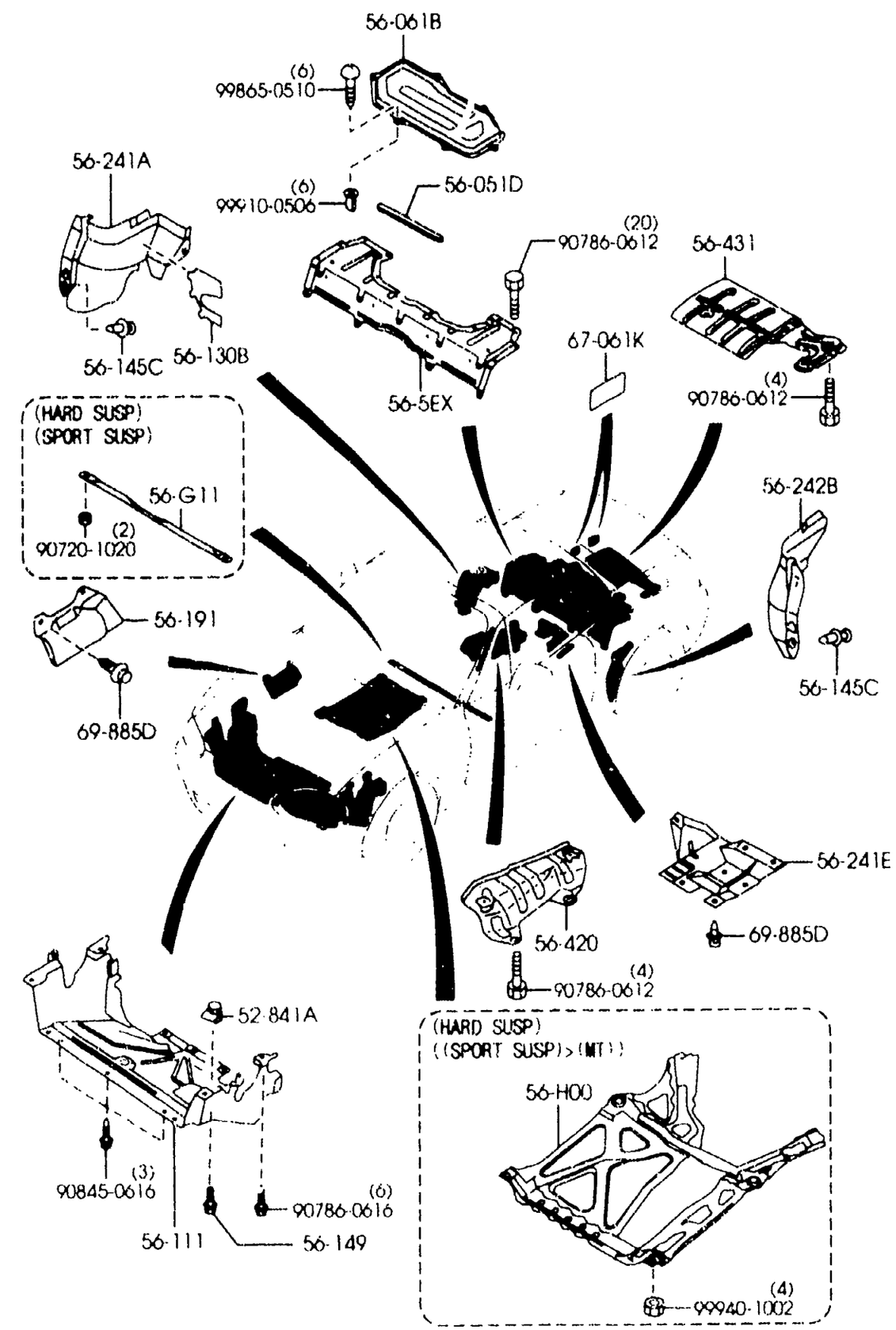

PART NO.	QTY	MODEL/RESTRICTION	MODEL/RESTRICTION	MODEL/RESTRICTION	FROM-TO
52-841A		NUT,CLIP	ECROU		
B455-56-135	1				
56-G11		PLATE,BASE	PLATEAU,BASE		
N067-56-G11A	1	(HARD SUSP) (SPORT SUSP)	(SUSP.FERM) (SUSP. SPORTIVE)		
56-H00		MEMBER(R),CROSS	MEMBRURE TRAVERSE(D)		
N067-56-H10A	1	(HARD SUSP) ((SPORT SUSP)>(MT))	(SUSP.FERM) ((SUSP. SPORTIVE)>(B.V.MANU))		
56-051D		RUBBER,SEAL	JOINT CAOUTCHOUC		
NC10-56-062	1				
56-061B		COVER(R),SIDE-DECK	COUVERCLE(D),COTE-PONT AV		
NC10-56-061	1				
56-111		COVER,UNDER	COUVERCLE, INF.		
NA01-56-111F	1				
56-130B		PLATE(R)	PLAQUE(D)		
NC10-56-312	1				
56-145C		CLIP,MUD GUARD	ETRIER,GARDE BOUE		
BC1D-56-145	13				
56-149		SCREW,TAPPING-MUD GUARD	VIS,SOUTIRAGE-GARDE BOUE		
B455-56-149	1				
56-191		SHIELD,SPLASH	BOUCLIER		
NA01-56-112	1				
56-241A		SHIELD(R),SPLASH-REAR	TOLE GARDE-BOUE(D),ARR		
NA01-56-311D	1				
56-241E		SHIELD(R),SIGHT-R. FENDER	PROTECTEUR(D),VUE-AILE AR		
NC72-56-241B	1				
56-242B		SHIELD(L),SPLASH-REAR	TOLE GARDE-BOUE(G),ARR		
NA01-56-321D	1				

5390A FLOOR ATTACHMENTS

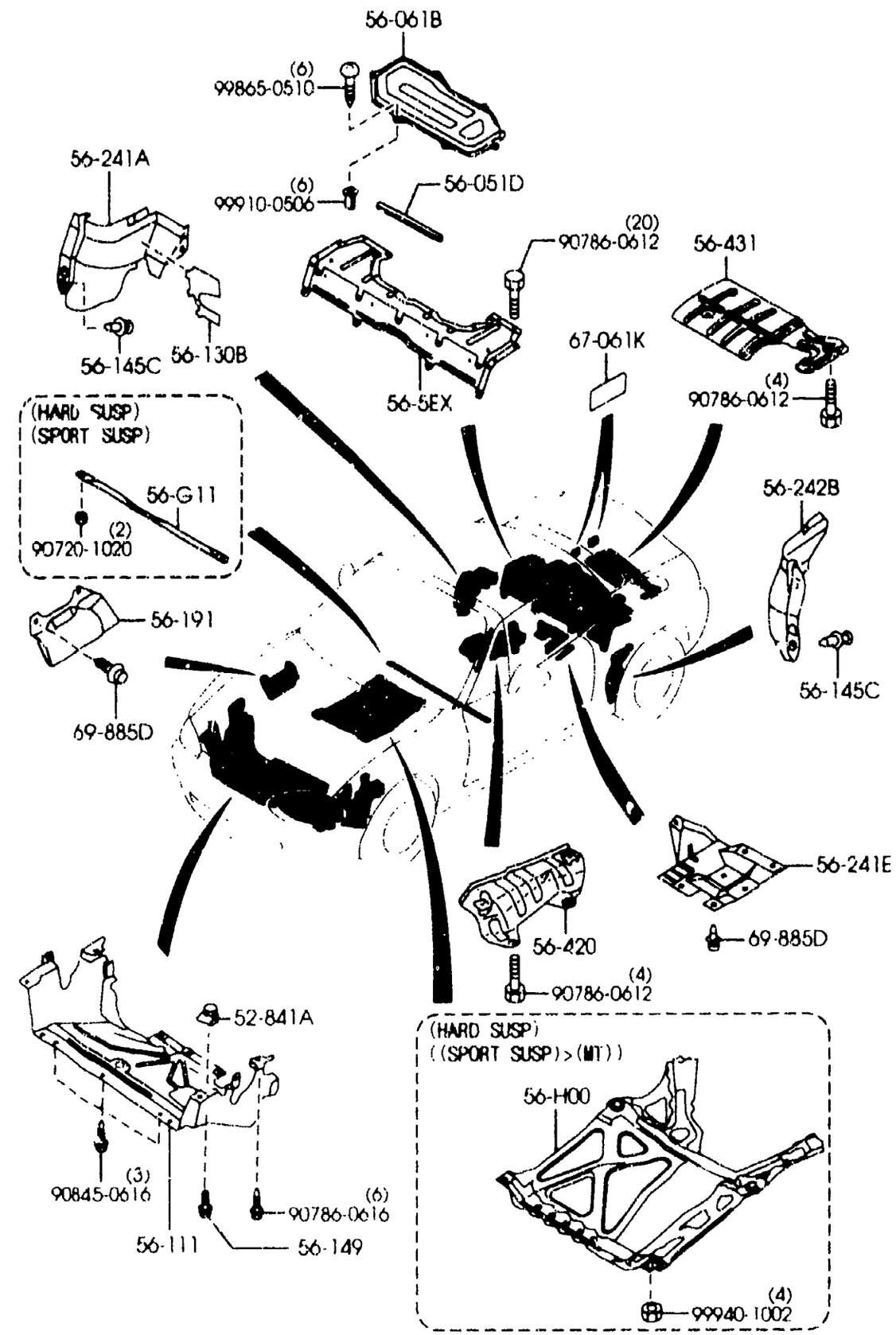

PART NO.	QTY	MODEL/RESTRICTION	MODEL/RESTRICTION	MODEL/RESTRICTION	FROM-TO
56-420		INSULATOR,FRONT	ISOLANT AV		
N067-56-411B	1				
56-431		INSULATOR,HEAT	ISOLATEUR		
NC10-56-451C	1				
56-5EX		BULKHEAD	PAROI SEPARATION		
N066-56-5EXB	1	(NOR. SUSP)	(SUSP.NRML)		
N067-56-5EXA	1	(HARD SUSP) (SPORT SUSP)	(SUSP.FERM) (SUSP. SPORTIVE)		
67-061K		PAD,PROTECTOR	FIBRANNE,PROTECTEUR		
G001-67-061	2				
69-885D		FASTENER	AGRAFE		
NA01-56-145	4				

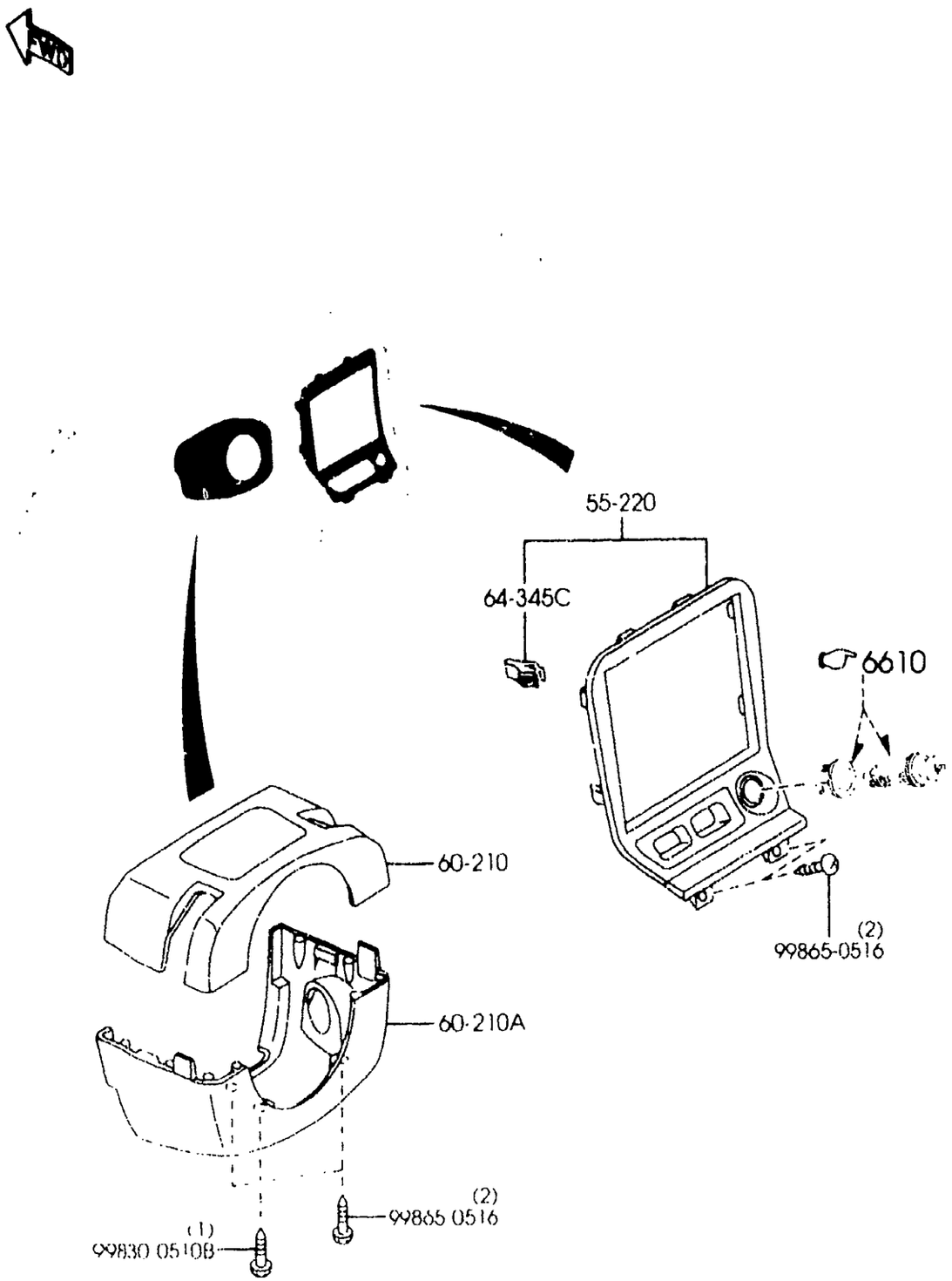

PART NO.	QTY	MODEL/RESTRICTION	MODEL/RESTRICTION	MODEL/RESTRICTION	FROM-TO
55-220		PANEL,CENTE:	MONTANT CENTRAL		
NC10-55-210B	1	(STD PA			
NC76-55-210	1	(WOOD PANE..			
60-210		COVER,COLUMN-UPPER	GAINE DE DIRECTION, SUP.		
NC10-60-220	1				
60-210A		COVER,COLUMN-LOWER	GAINE COLONNE DIRECT ION		
NC10-60-231A	1				
64-345C		SPRING,UPPER PLATE	RESSORT,PLAQUE SUP		
J001-64-345	4				-1401
B30D-64-345	4				1401-

1401 NB35**-216419

5520A METER HOOD

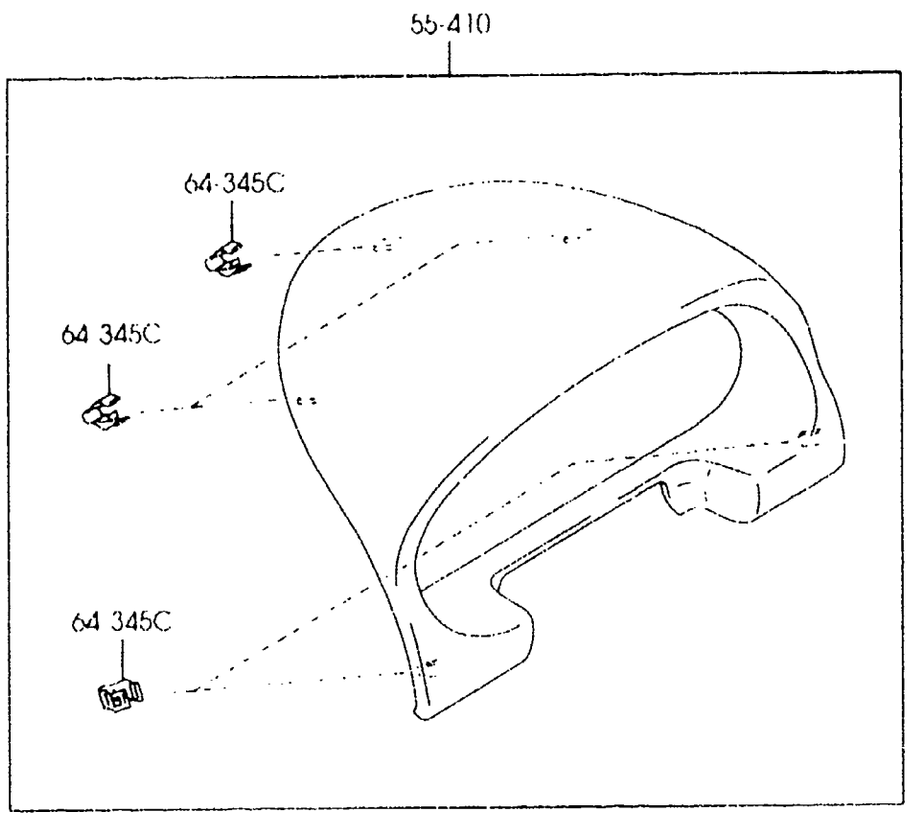

PART NO.	QTY	MODEL/RESTRICTION	MODEL/RESTRICTION	MODEL/RESTRICTION	FROM-TO
55-410		HOOD,METER	VISIERE,COMPTEUR		
NC10-55-420B	1				
64-345C		SPRING,UPPER PLATE	RESSORT,PLAQUE SUP		
J001-64-345	5				

5540A METER COMPONENTS

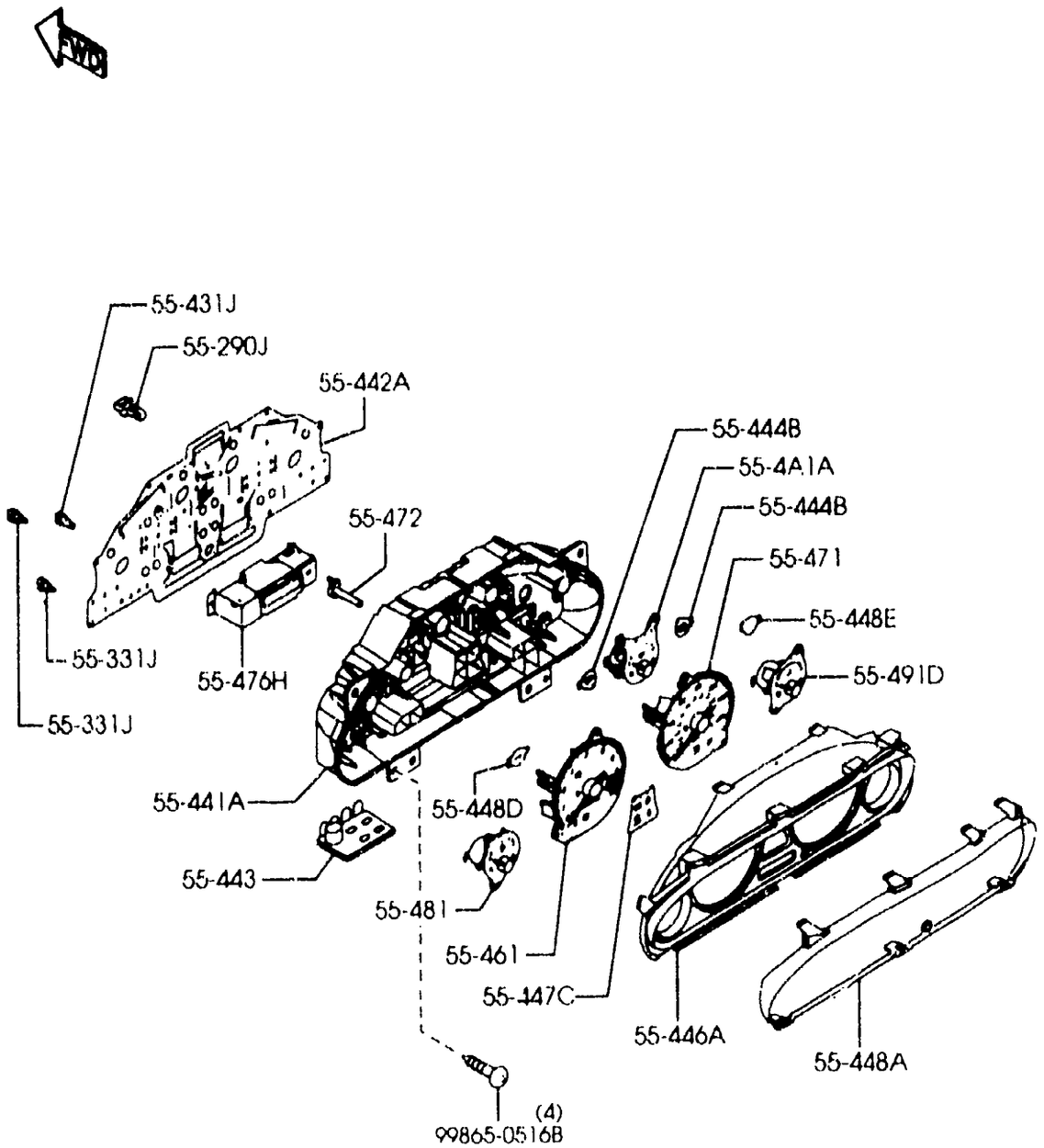

PART NO.	QTY	MODEL/RESTRICTION	MODEL/RESTRICTION	MODEL/RESTRICTION	FROM-TO
55-290J N066-55-43Y	4	BULB	AMPOULE		
55-331J NC10-55-43X	12	BULB	AMPOULE		
55-4A1A N066-55-4A1	1	METER,OIL PRESSURE	COMPTEUR,PRESSION HU ILE		
55-431J N066-55-43Z	1	BULB'A',METER SET	AMPOULE'A',GROUPE CO MPT.		
55-441A NC10-55-441	1	CASE,METER	BOITIER COMPTEUR		
55-442A NC11-55-442	1	PLATE,PRINT	CIRCUIT IMPRIME		
55-443 NC10-55-443	1	PLATE NO.2,PRINT	PLAQUE IMPRIME NO 2		
55-444B NC10-55-444	2	LENS,WARNING	LENTILLE,TEMOIN		
55-446A N066-55-446	1	PLATE,WINDOW	PLAQUE,INTERRUPTEUR		
55-447C NC10-55-445	1	LENS,WARNING	VERRE LAMPE TEMOIN		
55-448A NC10-55-447	1	LENS,FRONT	LENTILLE AV		
55-448D NC10-55-448	1	LENS,WARNING UNIT	OBJECTIF,AVERTISSEUR		
55-448E NC10-55-449	1	LENS'E',WARNING-METE R SET	OBJECTIF'E',AVERT-J, COMPT		
55-461 NC72-55-461	1	TACHOMETER	TACHYMETRE, COMPTE-T OURS		

5540A METER COMPONENTS

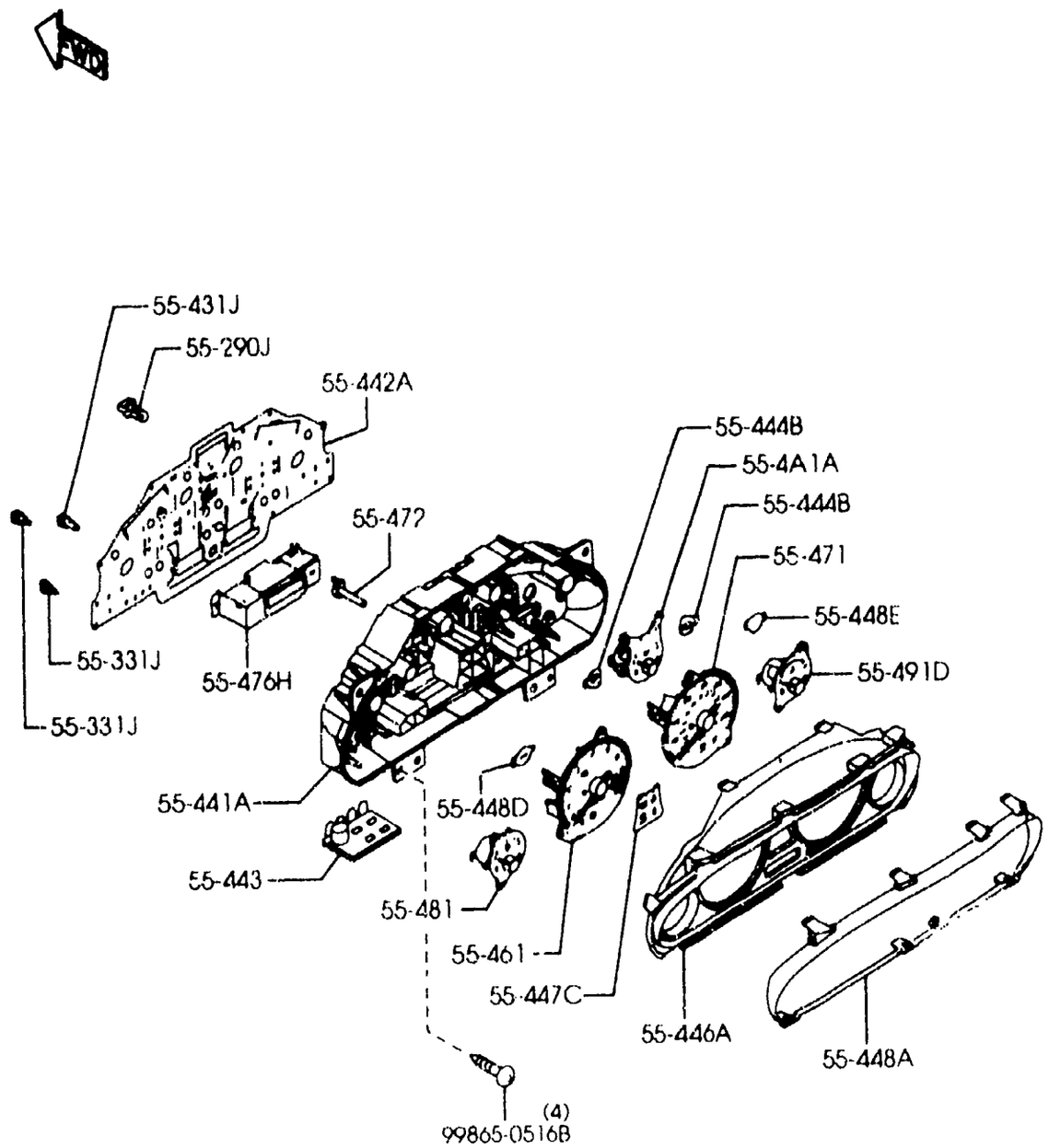

PART NO.	QTY	MODEL/RESTRICTION	MODEL/RESTRICTION	MODEL/RESTRICTION	FROM-TO
55-471		SPEEDOMETER	COMPTEUR		
NC72-55-471	1	(MILE/H & KM/H)			
NC73-55-471	1	(KM/H & MILE/H)			
55-472		KNOB,TRIPMETER	BOUTON,INDICATEUR DE PARCOURS		
NC10-55-473	1				
55-476H		UNIT,DISPLAY-METER SET	UNITE,APPAREIL-G. COMPT		
NC72-55-476	1	(MILE/H & KM/H)			
NC73-55-476	1	(KM/H & MILE/H)			
55-481		METER,FUEL	INDICATEUR ESSENCE		
N066-55-481	1				
55-491D		METER,THERMO	THERMOMETRE		
N066-55-491	1				

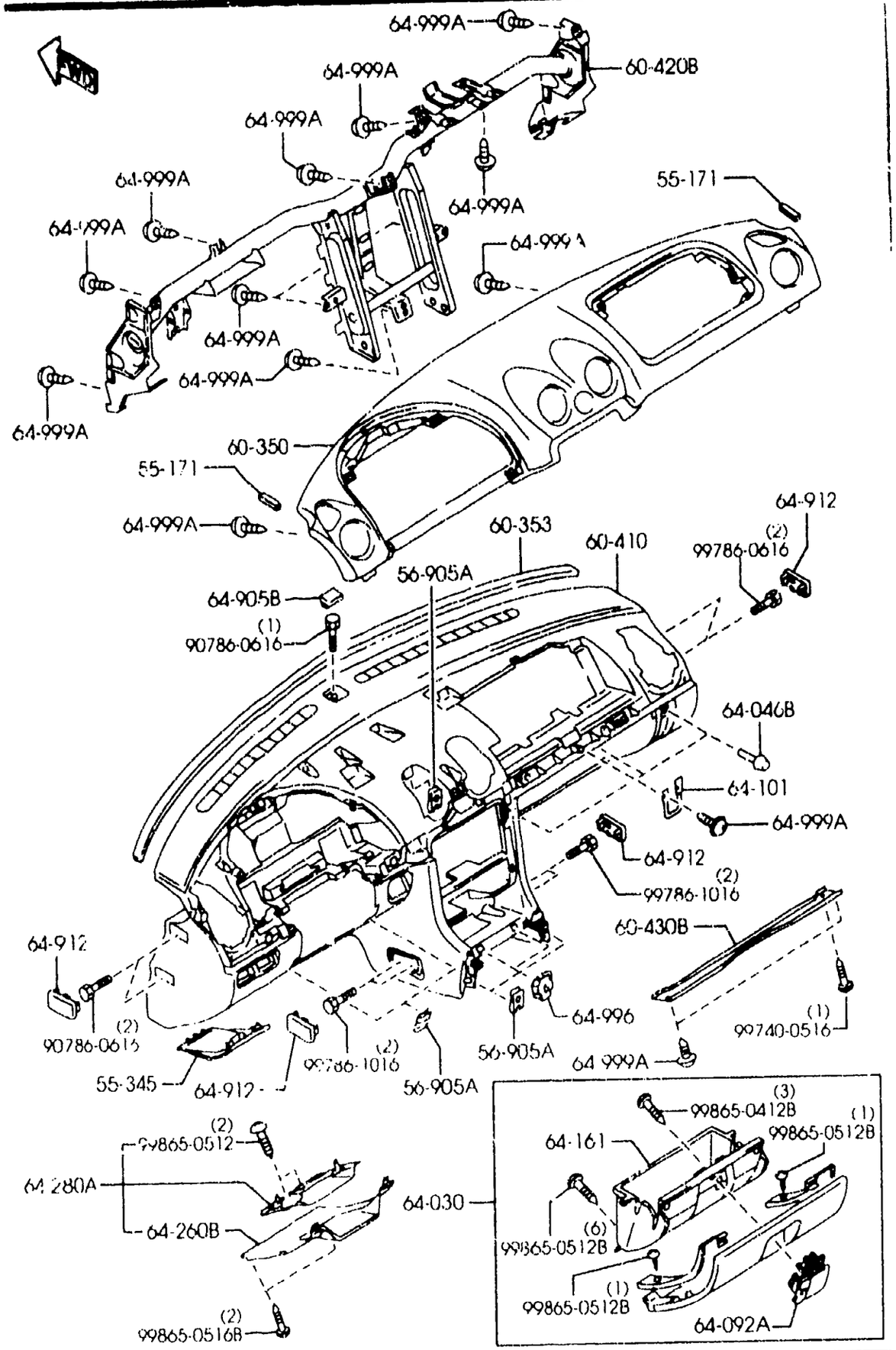

PART NO.	QTY	MODEL/RESTRICTION	MODEL/RESTRICTION	MODEL/RESTRICTION	FROM-TO
55-171		TAPE,CUSHION	RUBAN,COUSSIN		
GE4T-55-171	2				
55-345		COVER,FUSE BOX	CACHE		
NC10-55-551	1				
02	INT-	NB3 NB5 BLACK	NB3 NB5 NOIR		
21	INT-	NB4 NB8 TAN	NB4 NB8 TAN		
56-905A		NUT,SPRING	ECROU		
B092-60-408	5				
60-350		PAD,CRASH	TABLEAU DE BORD		
NC10-60-350	1				
60-353		RUBBER,URETHNE	CAOUTCHOUC,URETANNE		
NA75-60-353	1				
60-410		FRAME,INST. PANEL	ARMATURE, TABLEAU DE BORD		
NC10-60-401C	1				-1A01
C (NC10-60-401D)					
02	INT-	NB3 NB5 BLACK	NB3 NB5 NOIR		
21	INT-	NB4 NB8 BLACK/TAN	NB4 NB8 NOIR/TAN		
*NC10-60-401D	1				1A01-
* 02	INT-	NB3 NB5 BLACK	NB3 NB5 NOIR		
* 21	INT-	NB4 NB8 BLACK/TAN	NB4 NB8 NOIR/TAN		
60-420B		MEMBER,CRASH PAD	MEMBRE,TABLEAU BORD		
NC72-60-420	1				-0901
AN(NC72-60-420A)					
NC72-60-420A	1				0901-0C01
AN(NC72-60-420B)					
NC72-60-420B	1				0C01-
60-430B		MEMBER(R),INST. PANEL	MEMBRE(D),TABLEAU BORD		
N053-60-430A	1				
64-030		BOX,GLOVE	COUVERCLE, BOITE A GANTS		
NC10-64-030G	1				
02	INT-	NB3 NB5 BLACK	NB3 NB5 NOIR		
21	INT-	NB4 NB8 TAN	NB4 NB8 TAN		

NC10-60-401C		0901	NB35**-203448
C NC10-60-401D		0C01	NB35**-207195
B092-60-408	2	1A01	NB35**-223281
W201-64-999	2		

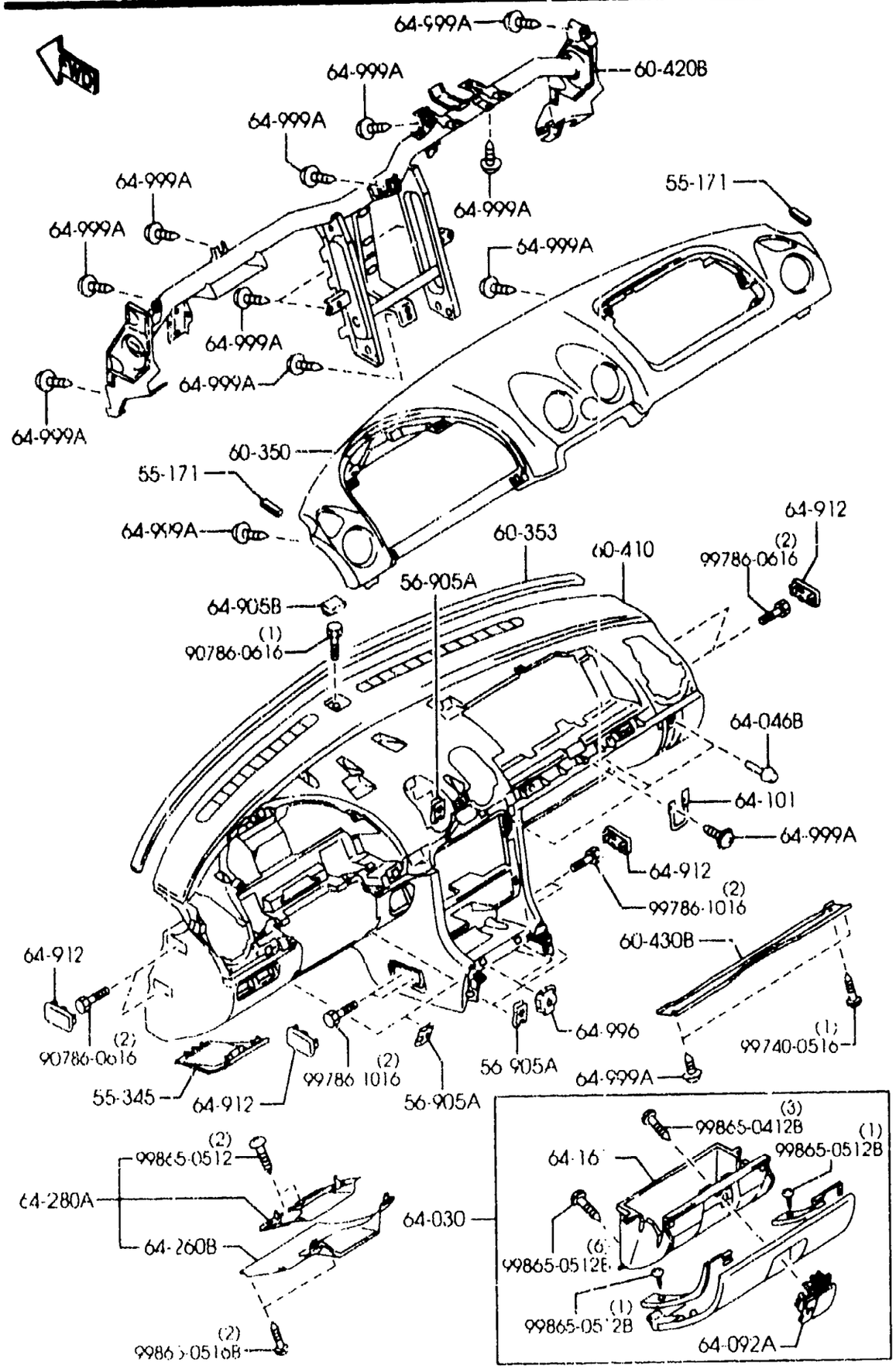

PART NO.	QTY	MODEL/RESTRICTION	MODEL/RESTRICTION	MODEL/RESTRICTION	FROM-TO
64-046B LB82-64-046	3	CUSHION,RUBBER-AIR BOARD	COUSS.,CAOUT.-PLANCH .AIR		
64-092A NC10-64-090C	1	LOCK,GLOVE LID	SERRURE,		
02	INT-	NB3 NB5 BLACK	NB3 NB5 NOIR		
21	INT-	NB4 NB8 TAN	NB4 NB8 TAN		
64-101 LB82-64-101	1	STRIKER	GACHE		
64-161 NC10-64-161C	1	BOX,GLOVE	PLATEAU,BOITE GANTS		
64-260B N053-64-261A	1	PANEL,LOWER	PANNEAU INF.		
02	INT-	NB3 NB5 BLACK	NB3 NB5 NOIR		
21	INT-	NB4 NB8 TAN	NB4 NB8 TAN		
64-280A NC10-64-280C	1	PANEL,LOWER	PANNEAU INFERIEUR		
02	INT-	NB3 NB5 BLACK	NB3 NB5 NOIR		
21	INT-	NB4 NB8 TAN	NB4 NB8 TAN		
64-905B NA01-64-905A	1	COVER,HOLE-(C)	COUVERCLE,OUVERTURE(C)		
02	INT-	NB3 NB4 NB5 NB8 BLACK	NB3 NB4 NB5 NB8 NOIR		
64-912 NA01-64-912A	6	COVER,SIDE	COUVERCLE LATERAL		
02	INT-	NB3 NB5 BLACK	NB3 NB5 NOIR		
21	INT-	NB4 NB8 TAN	NB4 NB8 TAN		
64-996 GJ21-64-996	2	NUT,EXPANSION	ECROU D'EXPANSION		
64-999A W201-64-999	27	SCREW,TAPPING	VIS TARAUDEUSE		

5570A CONSOLE

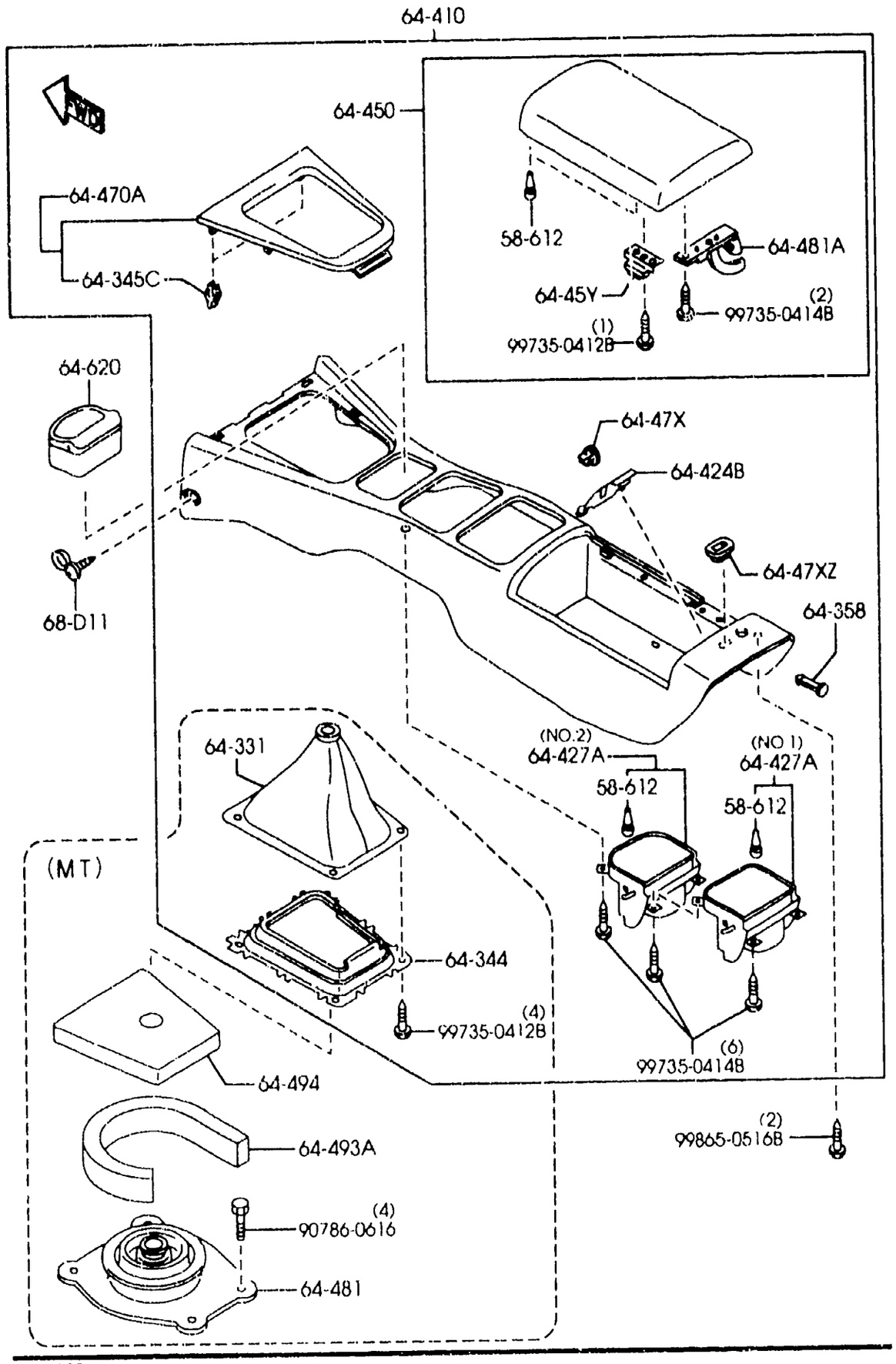

PART NO.	QTY	MODEL/RESTRICTION	MODEL/RESTRICTION	MODEL/RESTRICTION	FROM-TO
58-612		CUSHION,RUBBER	CAOUTCHOUC		
B092-64-046	6				
64-331		BOOT,CHANGE	COIFFE, LEVIER DE VITESSE		
NC10-64 331A	1	(STD PANEL)			
NC76-64-331	1	(WOOD PANEL)			
64-344		PLATE,BACK-BOOTS RING	PLAQUE,ARRIERE-BAGUE COFF		
NC10-64-334	1	(MT)	(B.V.MANU)		
64-345C		SPRING,UPPER PLATE	RESSORT,PLAQUE SUP		
S47P-64-345	2				
64-358		PIN	CLAVETTE		
N066-64-458	1				
64-410		CONSOLE,REAR	CONSOLE, AR		
NC72-64-420C	1	(MT)	(B.V.MANU)		-0821
02	INT-	NB3 NB5 BLACK	NB3 NB5 NOIR		
21	INT-	NB4 TAN	NB4 TAN		
NC77-64-420C	1	(AT)	(B.V.AUTOM)		-0821
02	INT-	NB3 NB5 BLACK	NB3 NB5 NOIR		
21	INT-	NB4 TAN	NB4 TAN		
NC72-64-420D	1	(MT)	(B.V.MANU)		0821-0801
02	INT-	NB3 NB5 BLACK	NB3 NB5 NOIR		
21	INT-	NB4 TAN	NB4 TAN		
NC77-64-420D	1	(AT)	(B.V.AUTOM)		0821-0801
02	INT-	NB3 NB5 BLACK	NB3 NB5 NOIR		
21	INT-	NB4 TAN	NB4 TAN		
NC72-64-420E	1	(MT)	(B.V.MANU)		0801-1108
02	INT-	NB3 NB5 BLACK	NB3 NB5 NOIR		
21	INT-	NB4 NB8 TAN	NB4 NB8 TAN		
NC77-64-420E	1	(STD PANEL) (AT)	(B.V.AUTOM)		0801-1827
02	INT-	NB3 NB5 BLACK	NB3 NB5 NOIR		
21	INT-	NB4 NB8 TAN	NB4 NB8 TAN		
NC72-64-420E	1	(STD PANEL) (MT)	(B.V.MANU)		1108-1827

0821 NB35**-201834
0801 NB35**-206344
1108 NB35**-208709
1827 NB35**-221520

5570A CONSOLE

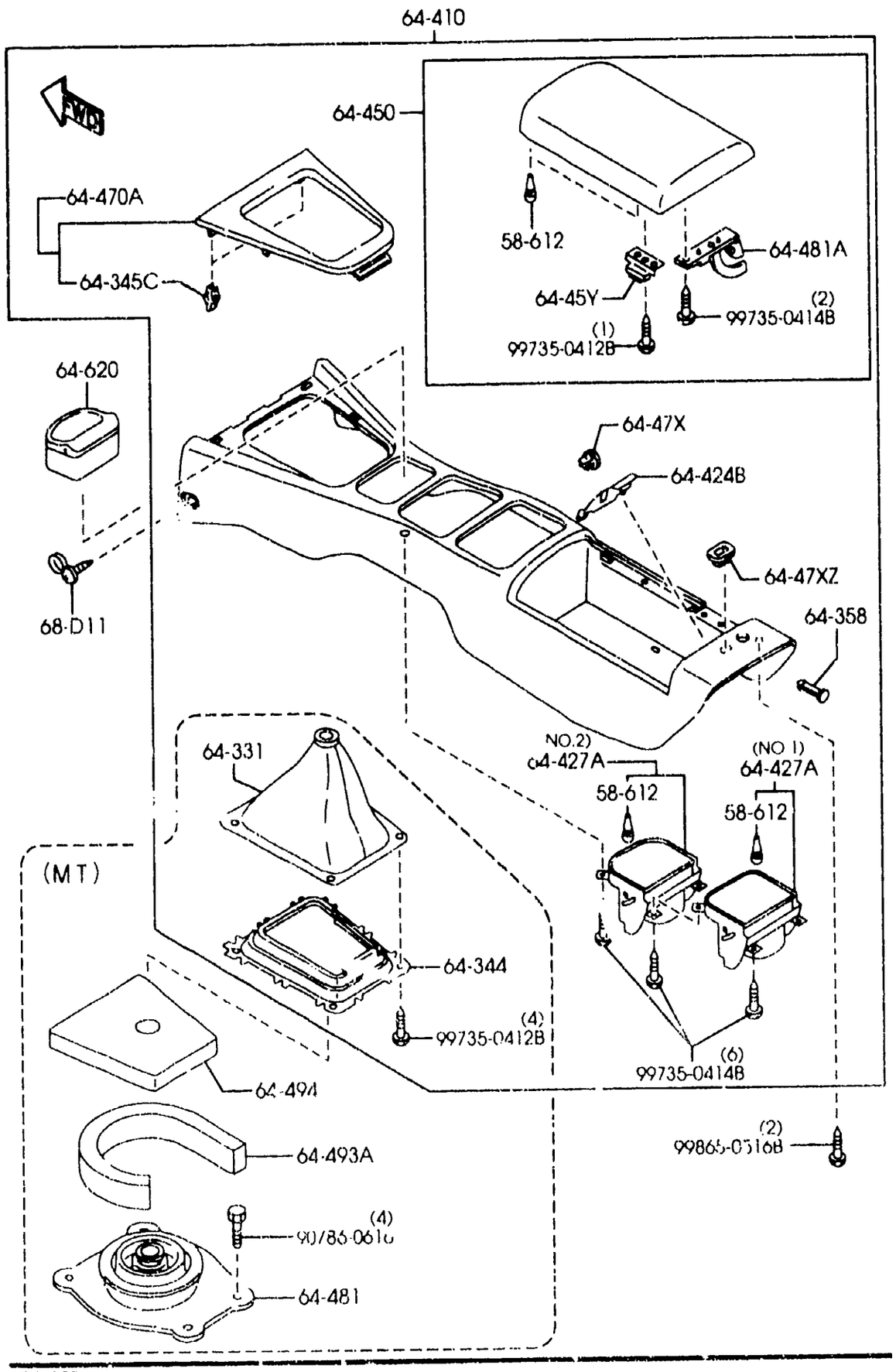

AUNA08

PART NO.	QTY	MODEL/RESTRICTION	MODEL/RESTRICTION	MODEL/RESTRICTION	FROM-TO
CONT'D					
02	INT-	NB3 NB5 BLACK	NB3 NB5 NOIR		
21	INT-	NB4 NB8 TAN	NB4 NB8 TAN		
NC76-64-420A	1	(WOOD PANEL) (MT)	(B.V.MANU)		1108-1827
21	INT-	NB4 TAN	NB4 TAN		
NC72-64-420G	1	(STD PANEL) (MT)	(B.V.MANU)		1827-
02	INT-	NB3 NB5 BLACK	NB3 NB5 NOIR		
21	INT-	NB4 NB8 TAN	NB4 NB8 TAN		
NC76-64-420C	1	(WOOD PANEL) (MT)	(B.V.MANU)		1827-
21	INT-	NB4 TAN	NB4 TAN		
NC77-64-420G	1	(STD PANEL) (AT)	(B.V.AUTOM)		1827-
02	INT-	NB3 NB5 BLACK	NB3 NB5 NOIR		
21	INT-	NB4 NB8 TAN	NB4 NB8 TAN		
64-424B		COVER,REAR CONSOLE	COUVERCLE CONSOLE AR RIERE		
N066-64-424	1				
64-427A		HOLDER,CUP	SUPPORT,CAPUCHON		
N067-64-39XB	1	(ILLUST. NO.2)			
02	INT-	NB3 NB5 BLACK	NB3 NB5 NOIR		
21	INT-	NB4 NB8 TAN	NB4 NB8 TAN		
N066-64-39XB	1	(ILLUST. NO.1)			-0801
02	INT-	NB3 NB5 BLACK	NB3 NB5 NOIR		
21	INT-	NB4 TAN	NB4 TAN		
N066-64-39XC	1	(ILLUST. NO.1)			0801-
02	INT-	NB3 NB5 BLACK	NB3 NB5 NOIR		
21	INT-	NB4 NB8 TAN	NB4 NB8 TAN		
64-45Y		LOCK,CONSOLE LID	VERROUILLAGE,COUV. C ONSOL		
N066-64-453B	1				-0821
02	INT-	NB3 NB5 BLACK	NB3 NB5 NOIR		
21	INT-	NB4 TAN	NB4 TAN		
N066-64-453C	1				0821-1827
02	INT-	NB3 NB5 BLACK	NB3 NB5 NOIR		

0821 NB35**-201834
0801 NB35**-206344
1108 NB35**-208709
1827 NB35**-221520

5570A CONSOLE

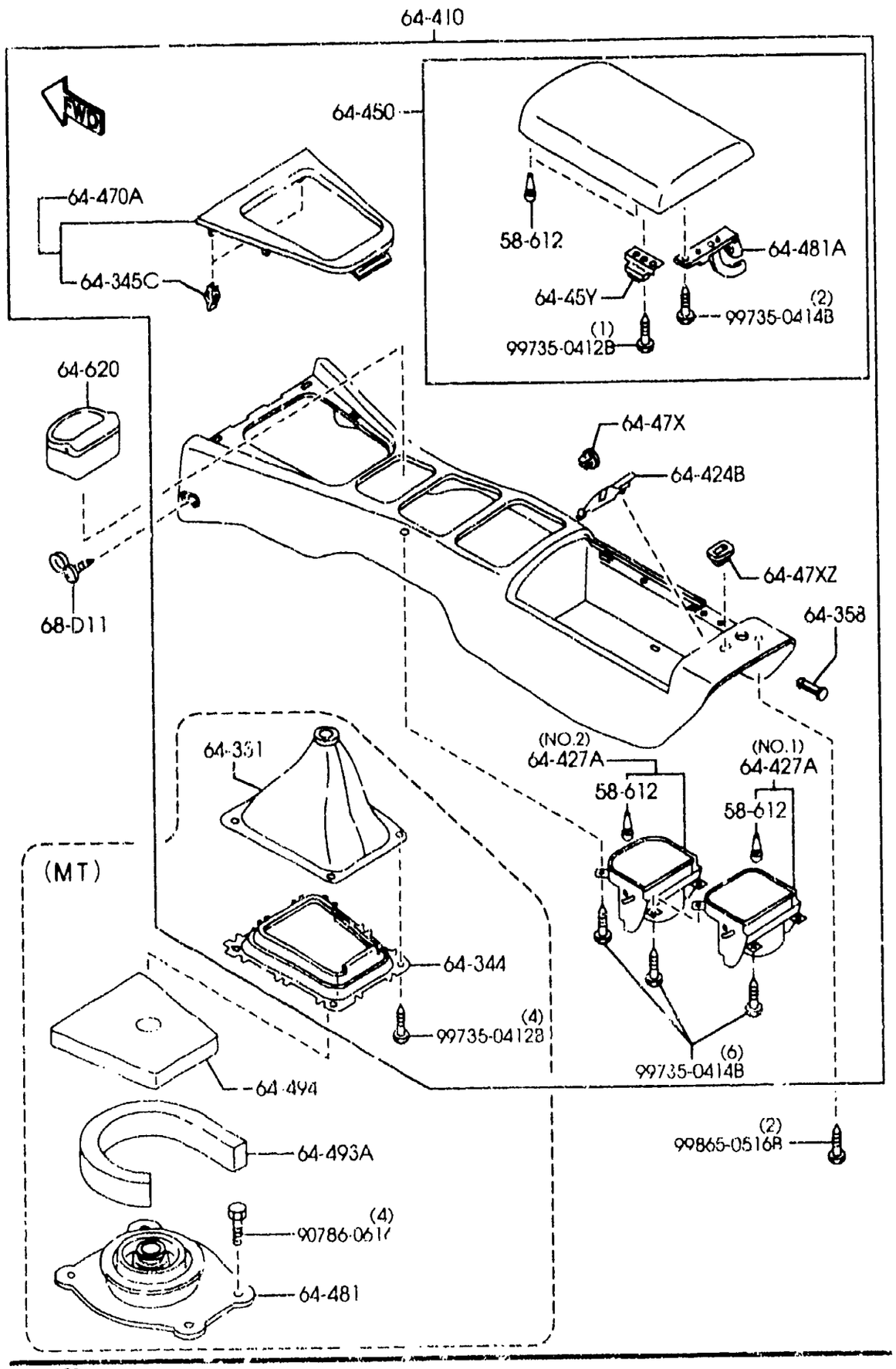

PART NO.	QTY	MODEL/RESTRICTION	MODEL/RESTRICTION	MODEL/RESTRICTION	FROM-TO
CONT'D					
21	INT-	NB4 NB8 TAN	NB4 NB8 TAN		
NC72-64-453A	1				1827-
02	INT-	NB3 NB5 BLACK	NB3 NB5 NOIR		
21	INT-	NB4 NB8 TAN	NB4 NB8 TAN		
64-450		LID,CONSOLE	COUVERCLE CONSOLE		
NC72-64-450A	1				-0821
02	INT-	NB3 NB5 BLACK	NB3 NB5 NOIR		
21	INT-	NB4 TAN	NB4 TAN		
NC72-64-450B	1				0821-1827
02	INT-	NB3 NB5 BLACK	NB3 NB5 NOIR		
21	INT-	NB4 NB8 TAN	NB4 NB8 TAN		
NC72-64-450D	1				1827-
02	INT-	NB3 NB5 BLACK	NB3 NB5 NOIR		
21	INT-	NB4 NB8 TAN	NB4 NB8 TAN		
64-47X		COVER(R),HOLE-RR CONSOLE	COUVERCLE(D),TROU-CONS AR		
N066-64-47X	1	(AT)	(B.V.AUTOM)		
02	INT-	NB3 NB5 BLACK	NB3 NB5 NOIR		
21	INT-	NB4 NB8 TAN	NB4 NB8 TAN		
N066-64-47X	2	(MT)	(B.V.MANU)		
02	INT-	NB3 NB5 BLACK	NB3 NB5 NOIR		
21	INT-	NB4 NB8 TAN	NB4 NB8 TAN		
64-47XZ		COVER(L),HOLE-RR CONSOLE	COUVERCLE(G),TROU-CONS AR		
N066-64-48X	1				
02	INT-	NB3 NB5 BLACK	NB3 NB5 NOIR		
21	INT-	NB4 NB8 TAN	NB4 NB8 TAN		
64-470A		PANEL,CONTROL-RR CONSOLE	PANNEAU,COMM.-CONSOLE ARR		
NC10-64-470A	1	(STD PANEL)			
NC76-64-470	1	(WOOD PANEL)			
64-481		INSULATOR NO.1,CHANGE	ISOLATEUR NO.1, RECHANGE		
NA01-64-481B	1	(MT)	(B.V.MANU)		
64-481A		STOPPER,CONSOLE LID	ARRETOIR		

0821 NB35**-201834
1827 NB35**-221520

5F70A CONSOLE

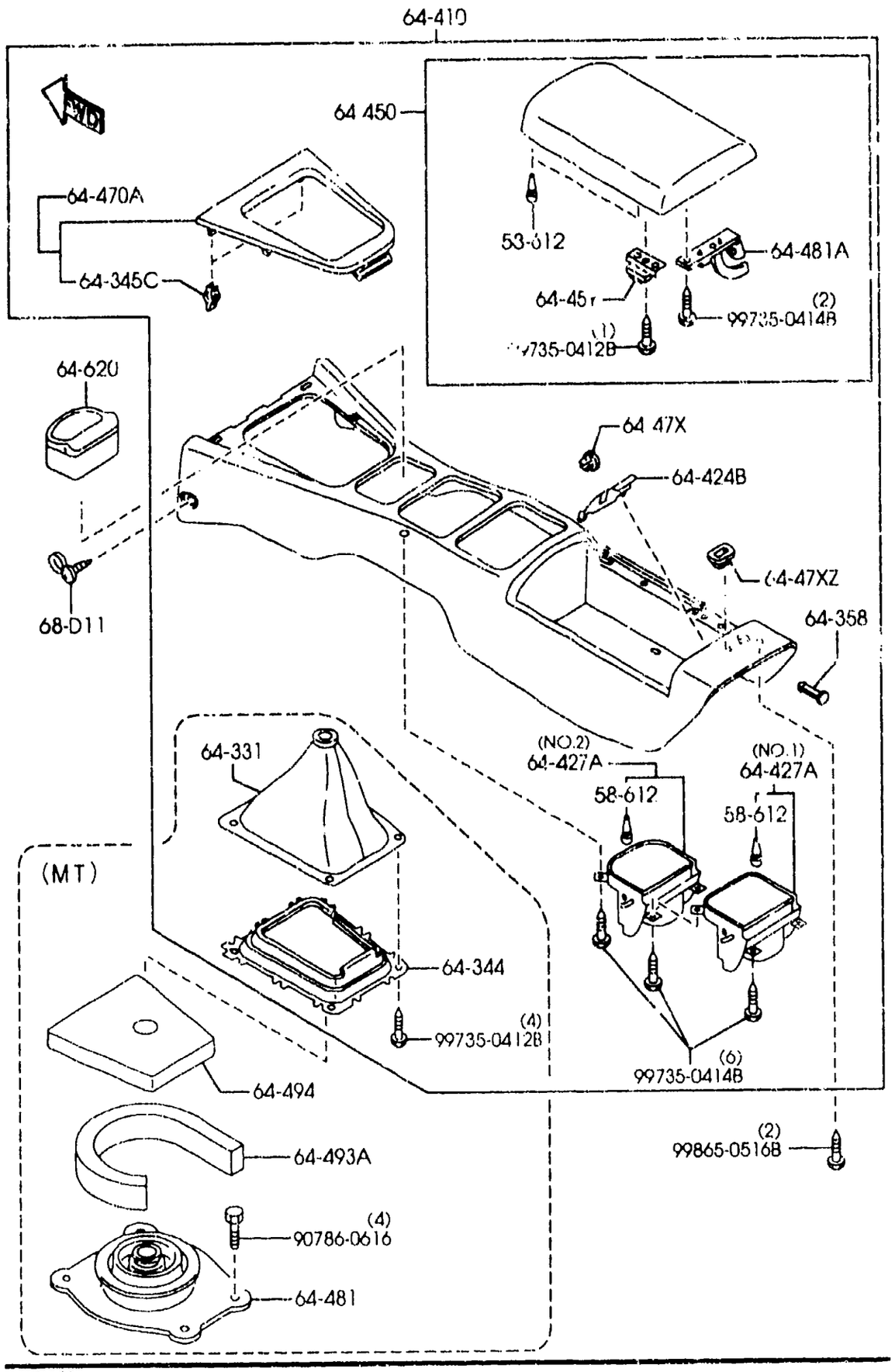

PART NO.	QTY	MODEL/RESTRICTION	MODEL/RESTRICTION	MODEL/RESTRICTION	FROM-TO
CONT'D					
N066-64-452	1				
02	INT-	NB3 NB5 BLACK	NB3 NB5 NOIR		
21	INT-	NB4 NB8 TAN	NB4 NB8 TAN		
+----------+					
| 64-493A |		PACK,SILENT	BOURRAGE SILENCIEUX		
+----------+					
H001-64-493	1	(MT)	(B.V MANU)		
+----------+					
| 64-494 |		PAD,CHANGE BOOT	BOURRELET,		
+----------+					
FB01-64-495	1	(MT)	(B.V.MANU)		
+----------+					
| 64-620 |		TRAY,ASH	CENDRIER		
+----------+					
N066-64-610B	1				
+----------+					
| 68-D11 |		CAP,SCREW	TETE,VIS		
+----------+					
B501-68-D11B	2				
00	INT-	NB3 NB5 BLACK	NB3 NB5 NOIR		
21	INT-	NB4 NB8 TAN	NB4 NB8 TAN		

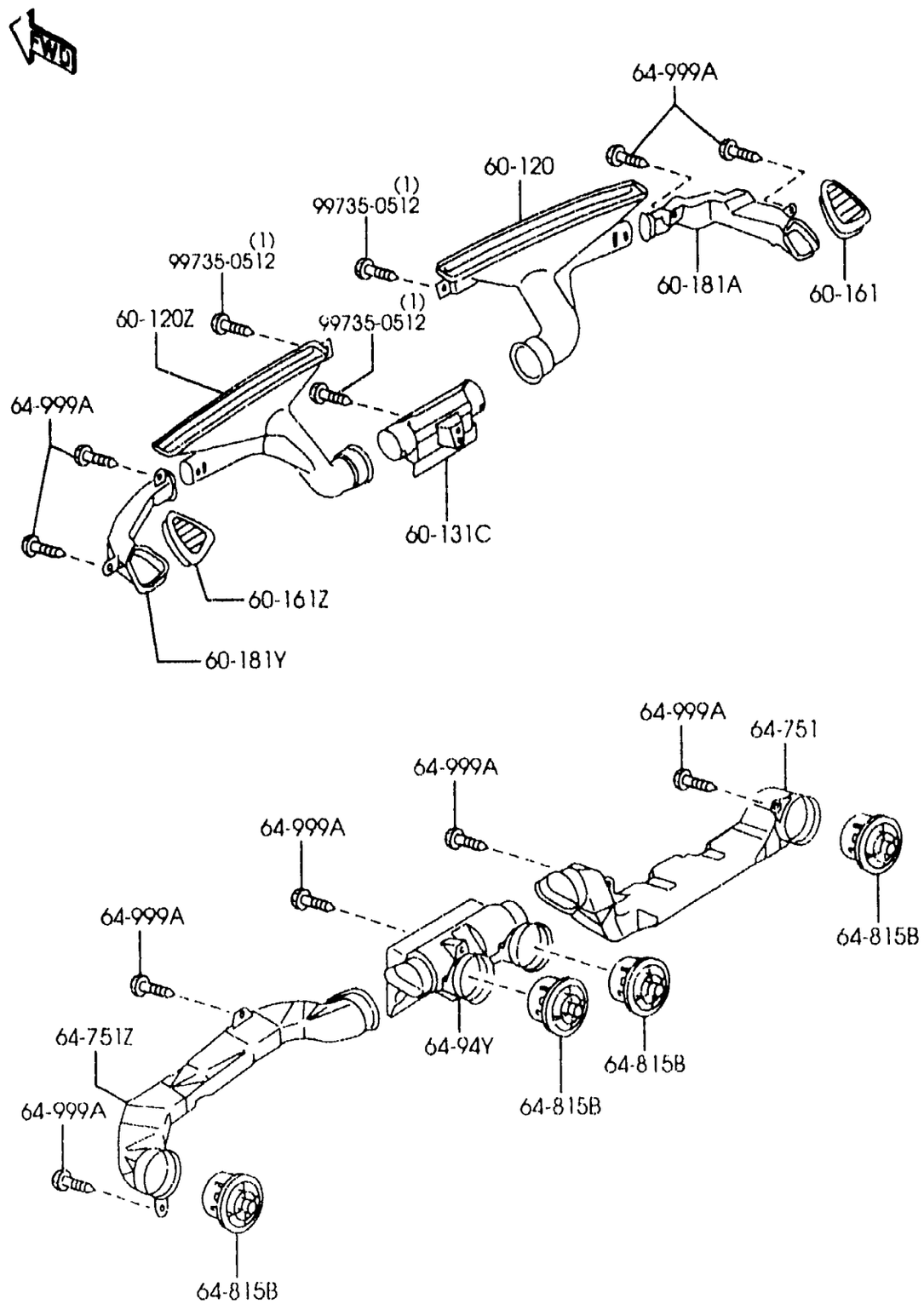

PART NO.	QTY	MODEL/RESTRICTION	MODEL/RESTRICTION	MODEL/RESTRICTION	FROM-TO
60-120		NOZZLE(R),DEFROSTER	BOUCHE,DEGIVRAGE (D)		
NA75-60-121B	1				
60-120Z		NOZZLE(L),DEFROSTER	BOUCHE,DEGIVRAGE (G)		
NA01-60-141	1				
60-131C		DUCT,DEFROSTER	CONDUITE		
NC10-60-122A	1				
60-161		GRILLE(R),DEMISTER	GRILLE(D),DESEMBUAGE		
NC10-60-160	1				
60-161Z		GRILLE(L),DEMISTER	GRILLE(G),DESEMBUAGE		
NC10-60-170	1				
60-181A		DUCT(R),SIDE DEMIST.	CONDUITE(G),DESEMBUA		
NC10-60-181A	1				
60-181Y		DUCT(L),SIDE DEMIST.	CONDUITE(G),		
NC10-60-191A	1				
64-751		DUCT(R)	CONDUIT (D)		
NC10-64-741A	1				
64-751Z		DUCT(L)	CONDUIT (G)		
NC10-64-841A	1				
64-815B		LOUVER,VENTILATOR	AUVENT AERATION		
NA01-64-81XC	4				
00	INT-	NB3 NB4 NB5 NB8 BLACK	NB3 NB4 NB5 NB8 NOIR		
64-94Y		DUCT NO.2(C),VENT.	CONDUIT NO.2(C),VENTILAT.		
NC10-64-941	1				
64-999A		SCREW,TAPPING	VIS TARAUDEUSE		
W201-64-999	9				

PASSENGER SIDE

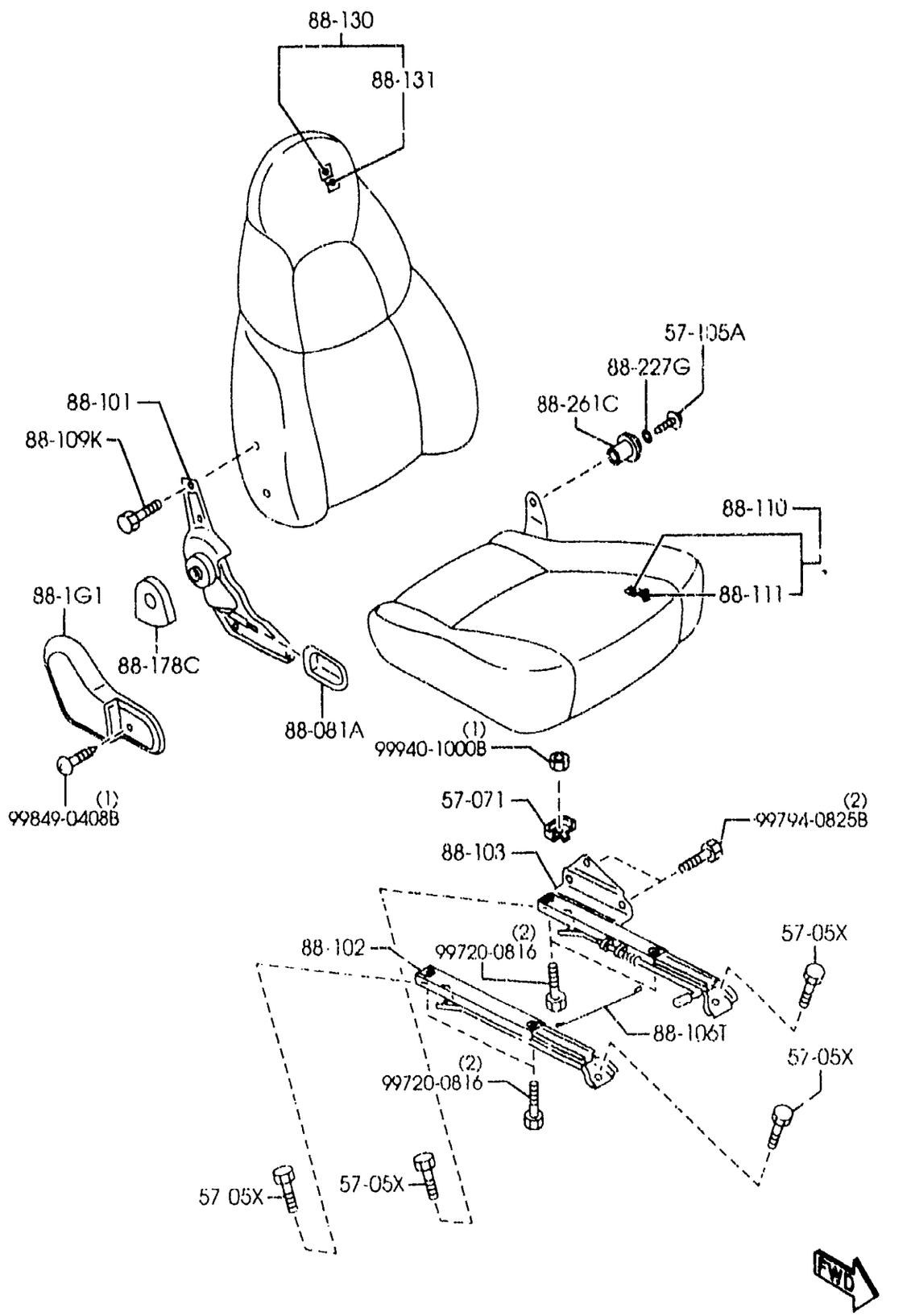

AUNA08

DRIVER SIDE

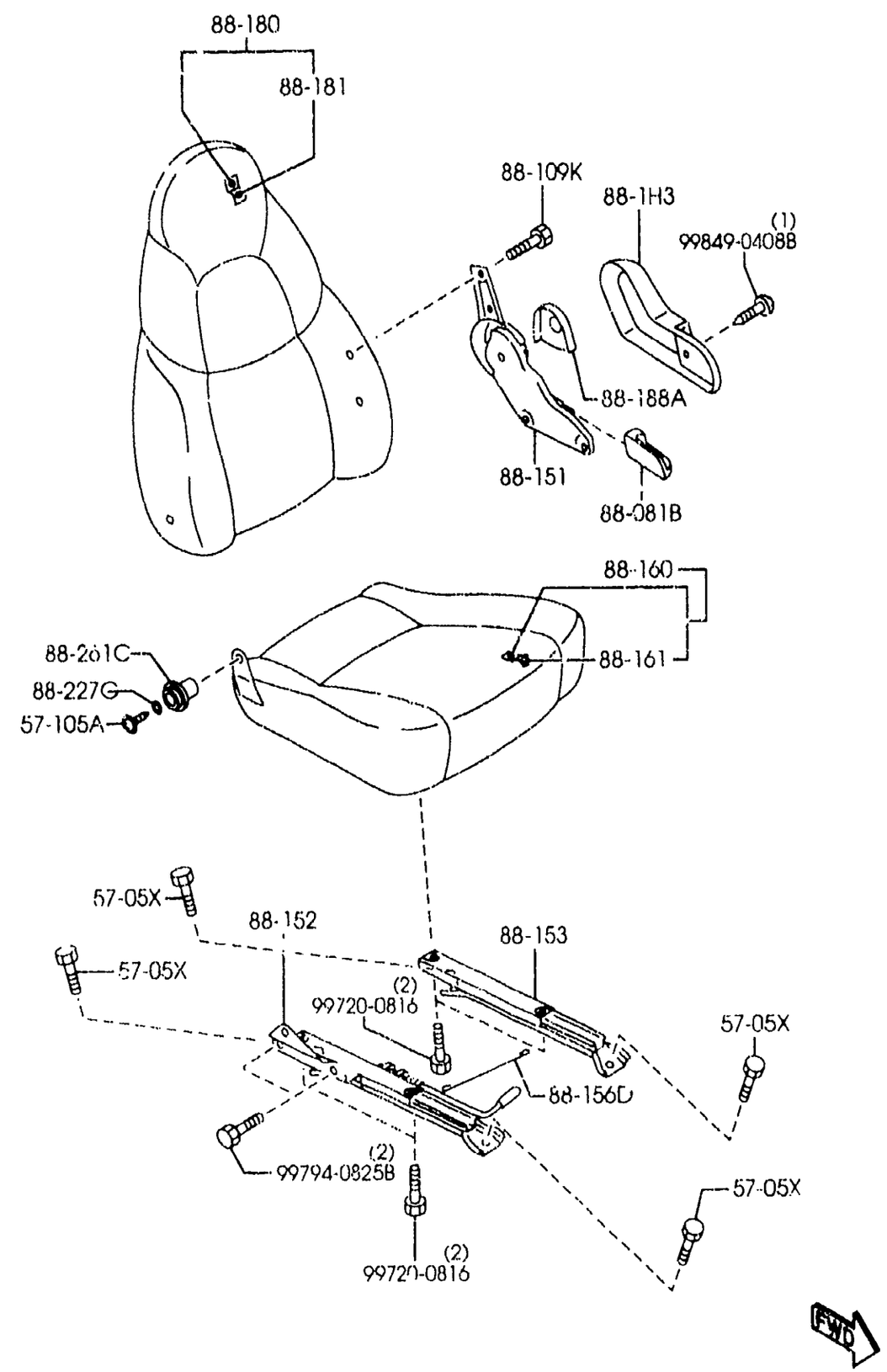

AUNA08

PASSENGER SIDE

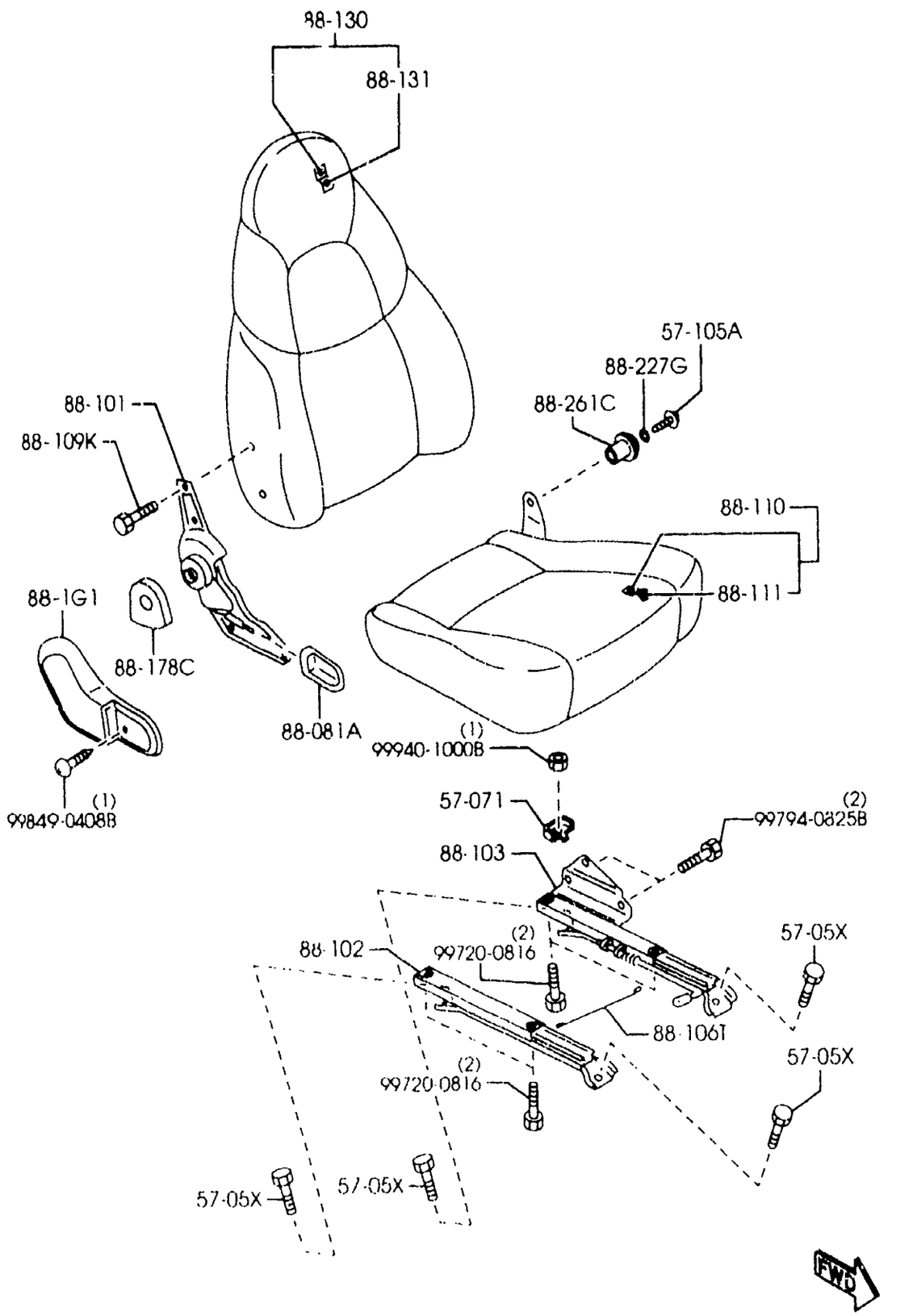

PART NO.	QTY	MODEL/RESTRICTION	MODEL/RESTRICTION	MODEL/RESTRICTION	FROM-TO
57-05X		BOLT,LINK	BOULON,CHAINION		
B455-57-05XB	8				
57-071		BRACKET,SEAT LOCK-RR	SUPPORT,ARRET SIEGE-AR		
NA75-57-071	1				
57-105A		BOLT,HINGE	BOULON DE CHARNIERE		
NC10-88-063	2				
88-081A		KNOB(R),KNUCKLE	BOULE(D)		
N066-88-1G5	1				
02	INT-	NB3 NB5 NB9 BLACK	NB3 NB5 NB9 NOIR		
21	INT-	NB4 NB8 TAN	NB4 NB8 TAN		
08-081B		KNOB(L),KNUCKLE	BOULE(G)		
N066-88-1H5	1				
02	INT-	NB3 NB5 NB9 BLACK	NB3 NB5 NB9 NOIR		
21	INT-	NB4 NB8 TAN	NB4 NB8 TAN		
88-1G1		COVER NO.1,SIDE-F.SEAT	CACHE NO.1,LAT.-SIEGE AV		
N066-88-1G1	1				
02	INT-	NB3 NB5 NB9 BLACK	NB3 NB5 NB9 NOIR		
21 *	INT-	NB4 NB8 TAN	NB4 NB8 TAN		
88-1H3		COVER NO.4,SIDE-F.SEAT	CACHE NO.4,LAT.-SIEGE AV		
N066-88-1H3	1				
02	INT-	NB3 NB5 NB9 BLACK	NB3 NB5 NB9 NOIR		
21	INT-	NB4 NB8 TAN	NB4 NB8 TAN		
88-101		KNUCKLE(R),RECLINING	CHARNIERE D'INCLINAISON (D)		
N066-88-101	1				
88-102		ADJUSTER,NO.1	REGLAGE NO 1		
N066-88-102	1				
88-103		ADJUSTER,NO.2	REGLAGE NO 2		
NC72-88-103	1				
88-106T		WIRE,CONNECT	FIL DE LIAISON		

DRIVER SIDE

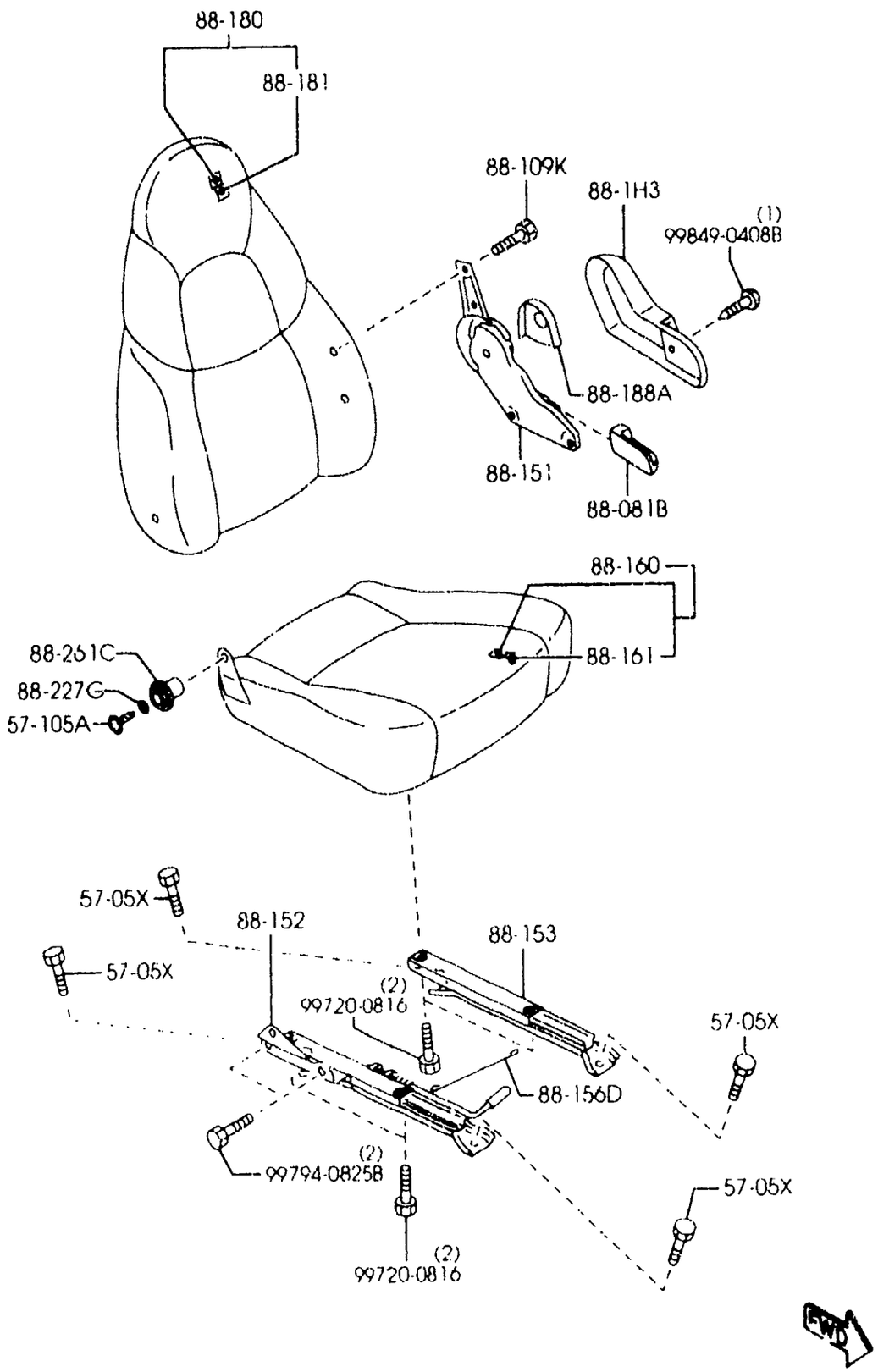

PART NO.	QTY	MODEL/RESTRICTION	MODEL/RESTRICTION	MODEL/RESTRICTION	FROM-TO
CONT'D					
NA01-88-106	1				
+----------+					
| 88-109K |		SCREW,KNUCKLE	VIS,GENOUILLERE		
+----------+					
H260-88-109	8				
+----------+					
| 88-110 |		CUSHION(R),FRT SEAT	HOUSSE DE SIEGE (D)		
+----------+					
NC74-88-110	1	(STC TYPE)			
02	INT-	NB3 BLACK	NB3 NOIR		
N066-88-110	1	(STA TYPE)			-0B01
02	INT-	NB3 BLACK	NB3 NOIR		
N068-88-110	1	(STB TYPE)			-1501
21	INT-	NB4 TAN	NB4 TAN		
N066-88-110A	1	(STA TYPE)			0B01-
02	INT-	NB3 BLACK	NB3 NOIR		
N068-88-110A	1	(STB TYPE)			1501-
21	INT-	NB4 TAN	NB4 TAN		
23	INT-	NB9 BROWN	NB9 BRUN		
+----------+					
| 88-111 |		TRIM(R),SEAT CUSHION	HOUSSE DE SIEGE (D)		
+----------+					
NC74-88-111	1	(STC TYPE)			
02	INT-	NB3 BLACK	NB3 NOIR		
N066-88-111	1	(STA TYPE)			-0B01
02	INT-	NB3 BLACK	NB3 NOIR		
N068-88-111	1	(STB TYPE)			-1501
21	INT-	NB4 TAN	NB4 TAN		
N066-88-111A	1	(STA TYPE)			0B01-
02	INT-	NB3 BLACK	NB3 NOIR		
N068-88-111A	1	(STB TYPE)			1501-
21	INT-	NB4 TAN	NB4 TAN		
23	INT-	NB9 BROWN	NB9 BRUN		
+----------+					
| 88-130 |		BACK(R),FRONT SEAT	SIEGE(D), ARRIERE		
+----------+					
NC72-88-130	1	(STA TYPE)			
02	INT-	NB3 BLACK	NB3 NOIR		
NC73-88-130	1	(STB TYPE)			
21	INT-	NB4 TAN	NB4 TAN		

0B01 NB35**-206344
1501 NB35**-217826

PASSENGER SIDE

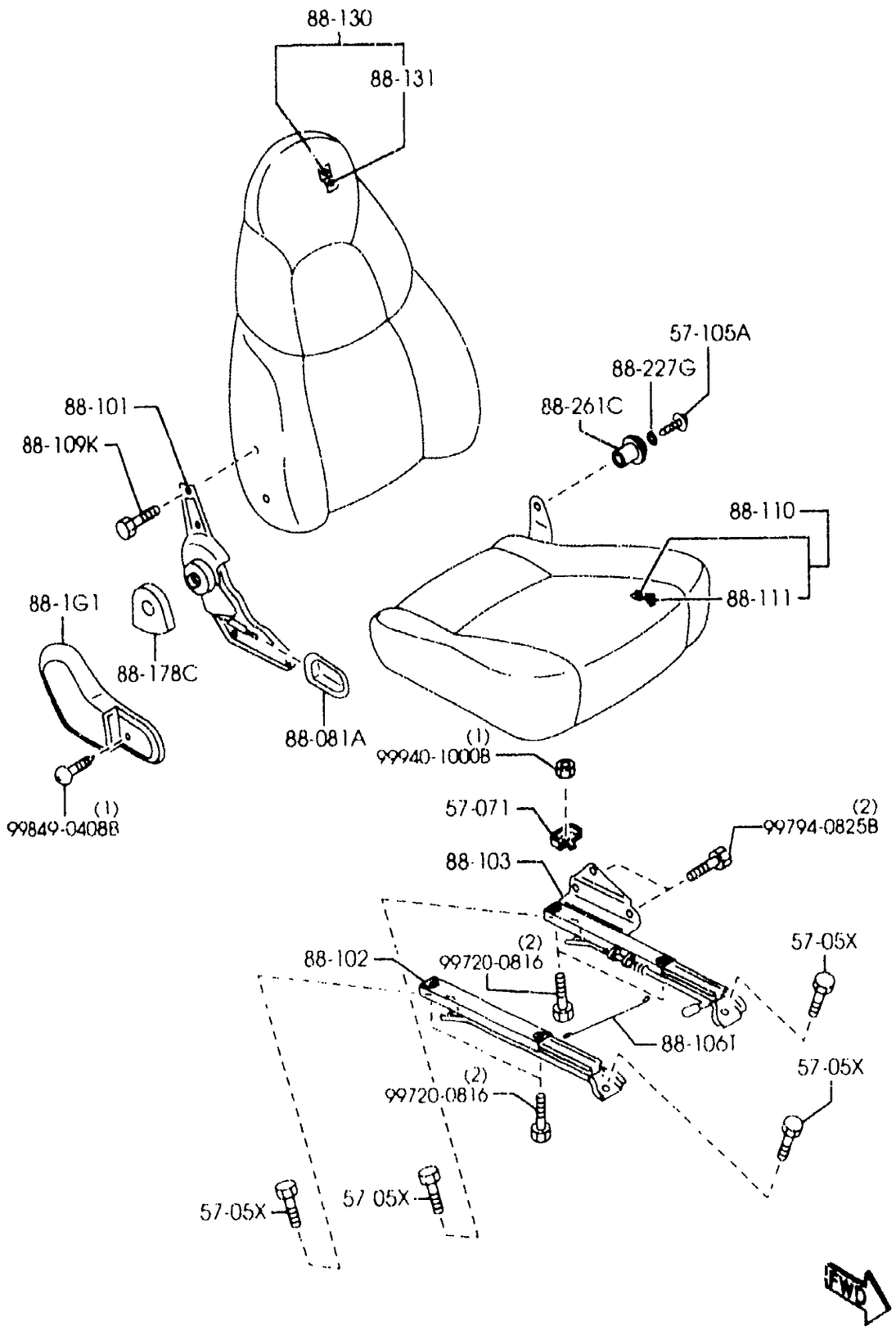

PART NO.	QTY	MODEL/RESTRICTION	MODEL/RESTRICTION	MODEL/RESTRICTION	FROM-TO
CONT'D					
23	INT-	NB9 BROWN	NB9 BRUN		
NC74-88-130	1	(STC TYPE)			
02	INT-	NB3 BLACK	NB3 NOIR		
+---------+ | 88-131 | +---------+		TRIM(R),SEAT BACK	GARNITURE (D), SIEGE ARR		
NC72-88-131	1	(STA TYPE)			
02	INT-	NB3 NB9 BLACK	NB3 NB9 NOIR		
NC73-88-131	1	(STB TYPE)			
21	INT-	NB4 NB8 TAN	NB4 NB8 TAN		
23	INT-	NB9 BROWN	NB9 BRUN		
NC74-88-131	1	(STC TYPE)			
02	INT-	NB3 BLACK	NB3 NOIR		
+---------+ | 88-151 | +---------+		KNUCKLE(L),RECLINING	CHARNIERE D'INCLINAISON (		
N066-88-155	1				
+---------+ | 88-152 | +---------+		ADJUSTER NO.3	REGLAGE NO 3		
N066-88-152	1				
+---------+ | 88-153 | +---------+		ADJUSTER NO.4	REGLAGE NO 4		
N066-88-153	1				
+---------+ | 88-156D | +---------+		WIRE,CONNECT	FIL DE LIAISON		
NA01-88-156	1				
+---------+ | 88-160 | +---------+		CUSHION(L),FRT SEAT	HOUSSE DE SIEGE (G)		
NC74-88-160	1	(STC TYPE)			
02	INT-	NB3 BLACK	NB3 NOIR		
N066-88-160	1	(STA TYPE)			-0B01
02	INT-	NB3 BLACK	NB3 NOIR		
N068-88-160	1	(STB TYPE)			-1501
21	INT-	NB4 TAN	NB4 TAN		
N066-88-160A	1	(STA TYPE)			0B01-
02	INT-	NB3 BLACK	NB3 NOIR		
N068-88-160A	1	(STB TYPE)			1501-
21	INT-	NB4 TAN	NB4 TAN		
23	INT-	NB9 BROWN	NB9 BRUN		

0B01 NB35**-206344
1501 NB35**-217826

DRIVER SIDE

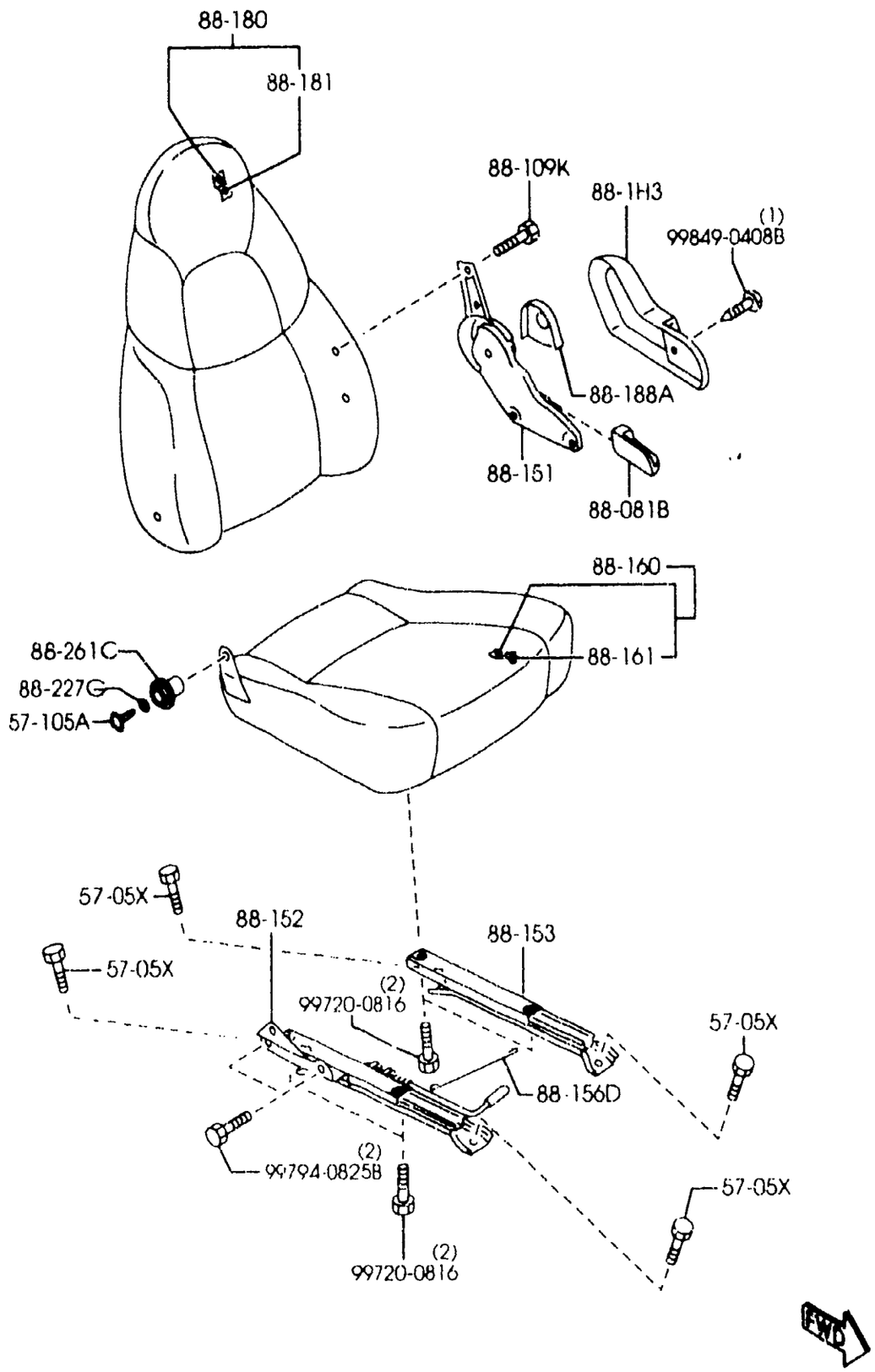

PART NO.	QTY	MODEL/RESTRICTION	MODEL/RESTRICTION	MODEL/RESTRICTION	FROM-TO
88-161		TRIM(L),SEAT CUSHION	HOUSSE DE SIEGE (G)		
NC74-88-161	1	(STC TYPE)			
02	INT-	NB3 BLACK	NB3 NOIR		
N066-88-161	1	(STA TYPE)			-0B01
02	INT-	NB3 BLACK	NB3 NOIR		
N068-88-161	1	(STB TYPE)			-1501
21	INT-	NB4 TAN	NB4 TAN		
N066-88-161A	1	(STA TYPE)			0B01-
02	INT-	NB3 BLACK	NB3 NOIR		
N068-88-161A	1	(STB TYPE)			1501-
21	INT-	NB4 TAN	NB4 TAN		
23	INT-	NB9 BROWN	NB9 BRUN		
88-178C		COVER(R),HINGE	COUVERCLE(D),CHARN		
N066-88-035	1				
02	INT-	NB3 NB5 NB9 BLACK	NB3 NB5 NB9 NOIR		
21	INT-	NB4 NB8 TAN	NB4 NB8 TAN		
88-180		BACK(L),FRONT SEAT	SIEGE(G), ARRIERE		
NC72-88-180	1	(STA TYPE)			
02	INT-	NB3 BLACK	NB3 NOIR		
NC73-88-180	1	(STB TYPE)			
21	INT-	NB4 TAN	NB4 TAN		
23	INT-	NB9 BROWN	NB9 BRUN		
NC74-88-180	1	(STC TYPE)			
02	INT-	NB3 BLACK	NB3 NOIR		
88-181		TRIM(L),SEAT BACK	HOUSSE (G), SIEGE AR		
NC72-88-181	1	(STA TYPE)			
02	INT-	NB3 BLACK	NB3 NOIR		
NC73-88-181	1	(STB TYPE)			
21	INT-	NB4 NB8 TAN	NB4 NB8 TAN		
23	INT-	NB9 BROWN	NB9 BRUN		
NC74-88-181	1	(STC TYPE)			
02	INT-	NB3 BLACK	NB3 NOIR		

0B01 NB35**-206344
1501 NB35**-217826

PASSENGER SIDE

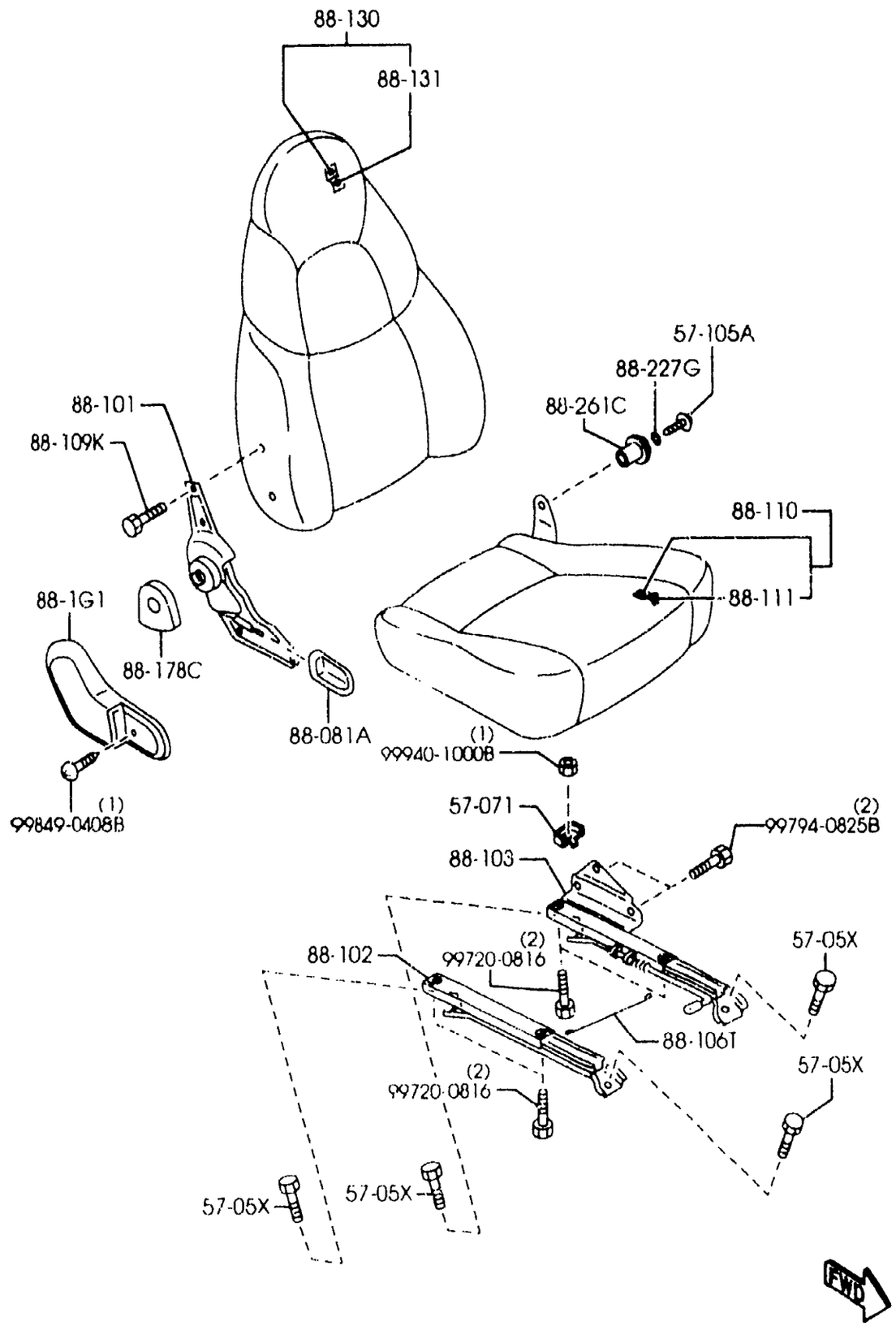

PART NO.	QTY	MODEL/RESTRICTION	MODEL/RESTRICTION	MODEL/RESTRICTION	FROM-TO
88-186A		COVER(L),HINGE	COUVERCLE(G),CHARN		
N066-88-085	1				
02	INT-	NB3 NB5 NB9 BLACK	NB3 NB5 NB9 NOIR		
21	INT-	NB4 NB8 TAN	NB4 NB8 TAN		
88-227G		SILENCER	SILENCIEUX		
NC10-88-049	2				
88-261C		LEVER,RELEASE	LEVIER DE DEGAGEMENT		
NA75-88-108	2				

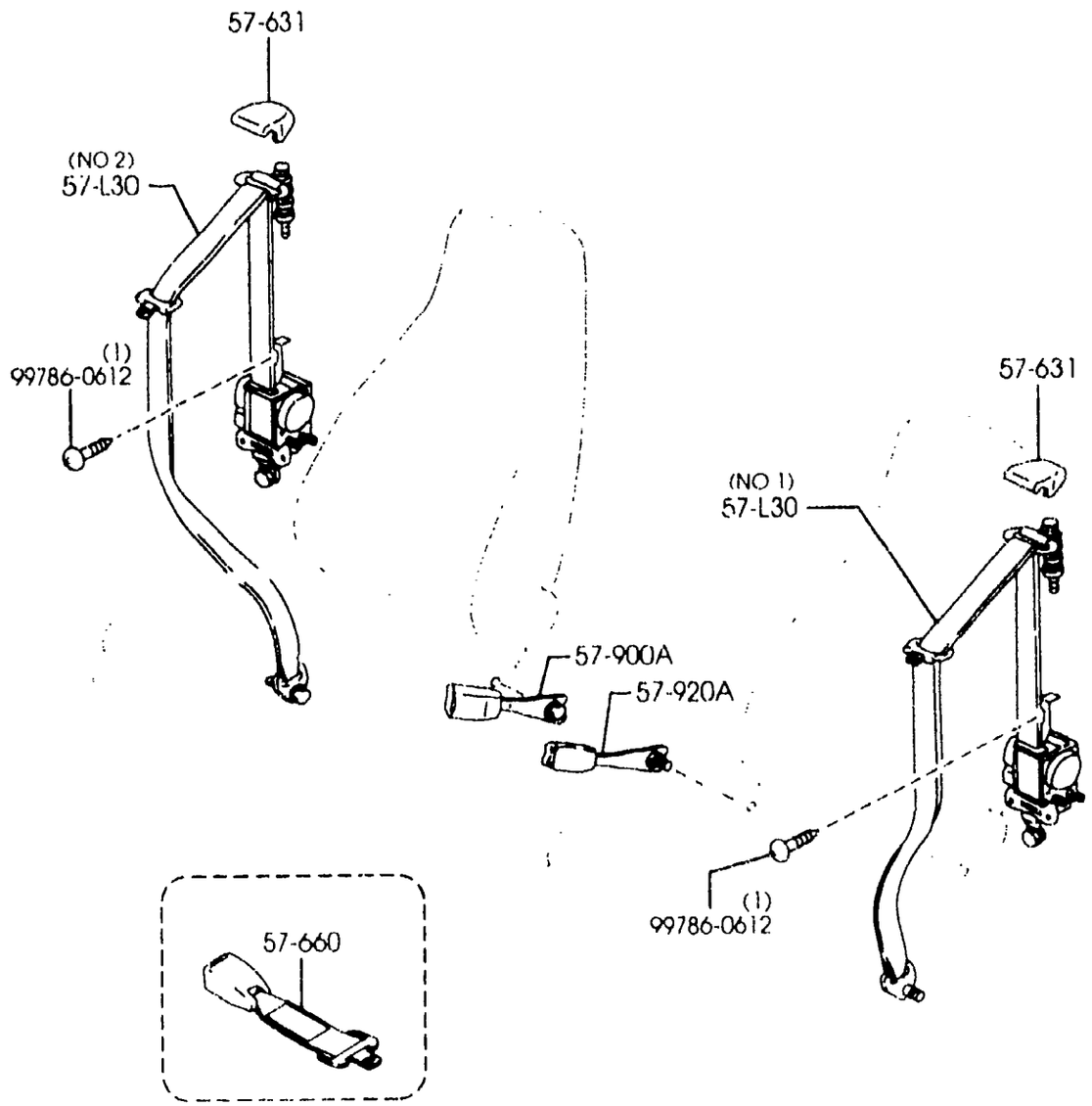

PART NO.	QTY	MODEL/RESTRICTION	MODEL/RESTRICTION	MODEL/RESTRICTION	FROM-TO
57-L30		BELT'B'(R),PRETENSIO NER	COURROIE"B"(D),PRETE NSIO.		
NC72-57-L30	1	(ILLUST. NO.1)			
00	INT-	NB3 NB5 NB9 BLACK	NB3 NB5 NB9 NOIR		
21	INT-	NB4 NB8 BLACK/TAN	NB4 NB8 NOIR/TAN		
N066-57-L30	1	(ILLUST. NO.2)			
00	INT-	NB3 NB5 NB9 BLACK	NB3 NB5 NB9 NOIR		
21	INT-	NB4 NB8 BLACK/TAN	NB4 NB8 NOIR/TAN		
57-631		COVER,ANCHOR	COUVERCLE		
NC10-57-631A	2				
02	INT-	NB3 NB5 NB9 BLACK	NB3 NB5 NB9 NOIR		
21	INT-	NB4 NB8 TAN	NB4 NB8 TAN		
57-660		BELT,EXTENSION-FRONT SEAT	CEINTURE,EXTENT-SIEG E AV		
FDY5-57-63X	1	9 INCH	9 INCH		
FDY6-57-63X	1	12 INCH	12 INCH		
57-900A		BELT'A'(R),FRT SEAT	CEINTURE "A"(D)AV.		
N066-57-680	1				
00	INT-	NB3 NB4 NB9 BLACK	NB3 NB4 NB9 NOIR		
57-920A		BELT'A'(L),FRT SEAT	CEINTURE "A"(G)AV.		
N066-57-620A	1				
00	INT-	NB3 NB4 NB9 BLACK	NB3 NB4 NB9 NOIR		

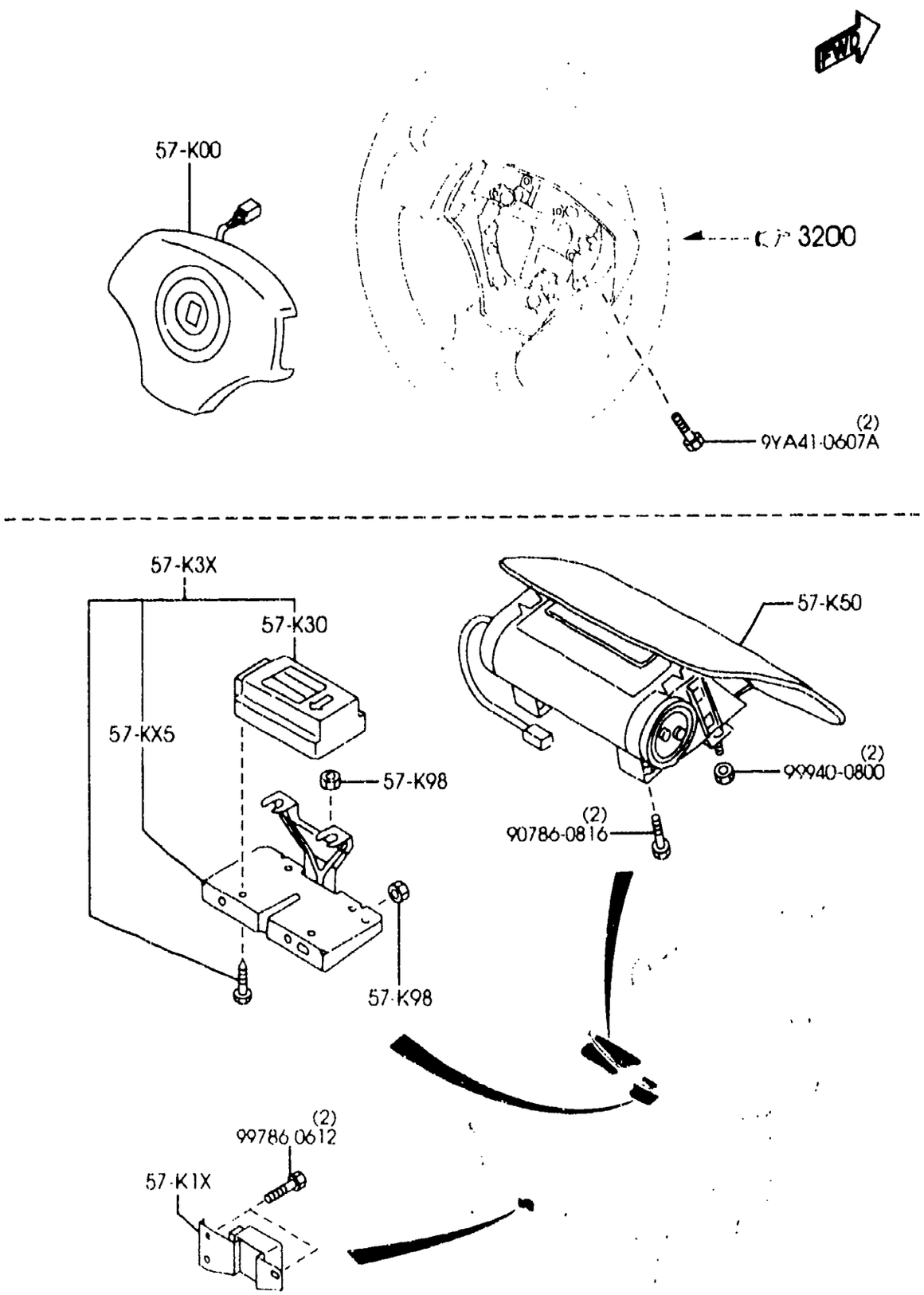

5795A -1 * AIR BAG

PART NO.	QTY	MODEL/RESTRICTION	MODEL/RESTRICTION	MODEL/RESTRICTION	FROM-TO
57-KX5		BRKT,AIR BAG MODULE	CONSOLE,MODULE SAC AIR		
N034-57-KX0A	1				
57-K00		MODULE,AIR BAG	MODULE,SAC AIR		
B28V-57-K00	1				-1601
B28V-57-K00A	1				1601-
00	INT-	NB3 NB4 NB5 NB8 NB9 BLACK	NB3 NB4 NB5 NB8 NB9 NOIR		
57-K1X		SENSOR,AIR BAG	CAPTEUR,SAC AIR		
N066-57-K1XA	1				
57-K3X		SENSOR,AIR BAG	CAPTEUR,SAC AIR		
N066-57-K3XB	1				
57-K30		UNIT,SAS	UNITE,CAPTEUR SAC AIR		
N066-57-K30B	1				
57-K50		MODULE,AIR BAG PASSENGER	MODULE,SAC AIR-VOYAGEUR		
NC10-57-K70C	1				-1401
02	INT-	NB3 NB4 NB5 NB8 NB9 BLACK	NB3 NB4 NB5 NB8 NB9 NOIR		
NC10-57-K70D	1				1401-
02	INT-	NB3 NB4 NB5 NB8 NB9 BLACK	NB3 NB4 NB5 NB8 NB9 NOIR		
57-K98		NUT	ECROU,MODULE SAC AIR		
FC66-57-K98	4				

1401 NB35**-216419
1601 NB35**-219011

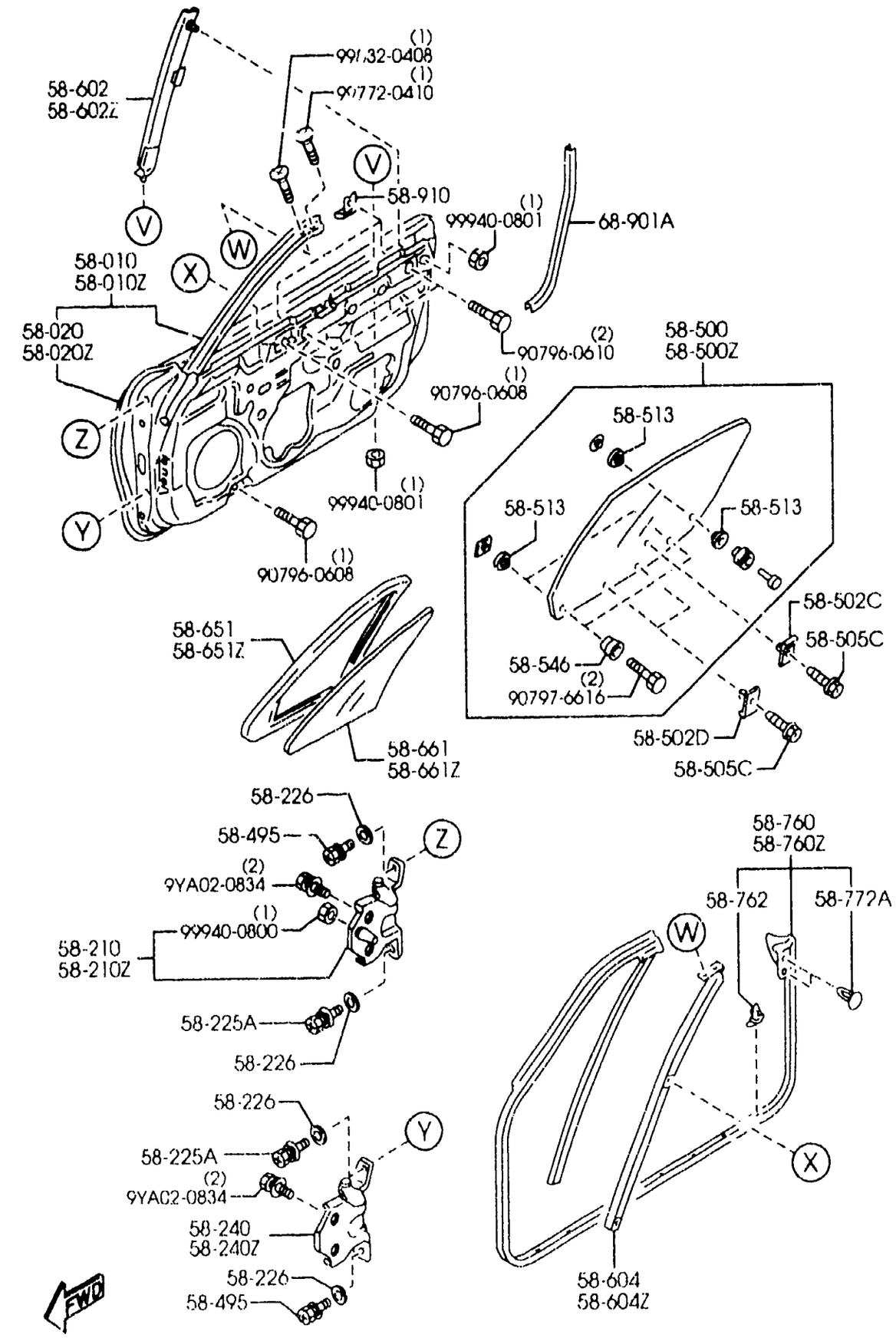

AUNA08 (1N11530)

PART NO.	QTY	MODEL/RESTRICTION	MODEL/RESTRICTION	MODEL/RESTRICTION	FROM-TO
58-010 NCY2-58-02XC	1	BODY(R),FRONT DOOR	PORTE AV,(D)		
58-010Z NCY2-59-02XC	1	BODY(L),FRONT DOOR	PORTE AV,(G)		
58-020 NC10-58-030F	1	PANEL(R),OUT.-FRT DOOR	PANNEAU PORTE (D)		
58-020Z NC10-59-030F	1	PANEL(L),OUT.-FRT DOOR	PANNEAU PORTE (G)		
58-210 DX50-58-210	1	HINGE(R),DOOR-UPPER	CHARNIERE SUPERIEURE ,PORTE		
58-210Z DX50-59-210	1	HINGE(L),DOOR-UPPER	CHARNIERE SUPERIEURE (G)		
58-225A S085-58-225	4	BOLT,SETTING	BOULON		
58-226 GJ21-58-226	8	WASHER,SETTING	RONDELLE DE FIXATION		
58-240 DX50-58-240	1	HINGE(R),DOOR-LOWER	CHARNIERE INF.(D),PORTE		
58-240Z DX50-59-240	1	HINGE(L),DOOR-LOWER	CHARNIERE (G),PORTE INFERIEURE		
58-495 3A54-58-225	4	BOLT,SET	BOULON,JEU		
58-500 NC10-58-510D	1	GLASS(R),DOOR-FRT	GLACE DE PORTE (D)		
58-500Z NC10-59-510D	1	GLASS(L),DOOR-FRT	GLACE DE PORTE (G)		
58-502C B235-58-502	2	GROMMET,SCREW	ANNEAU		

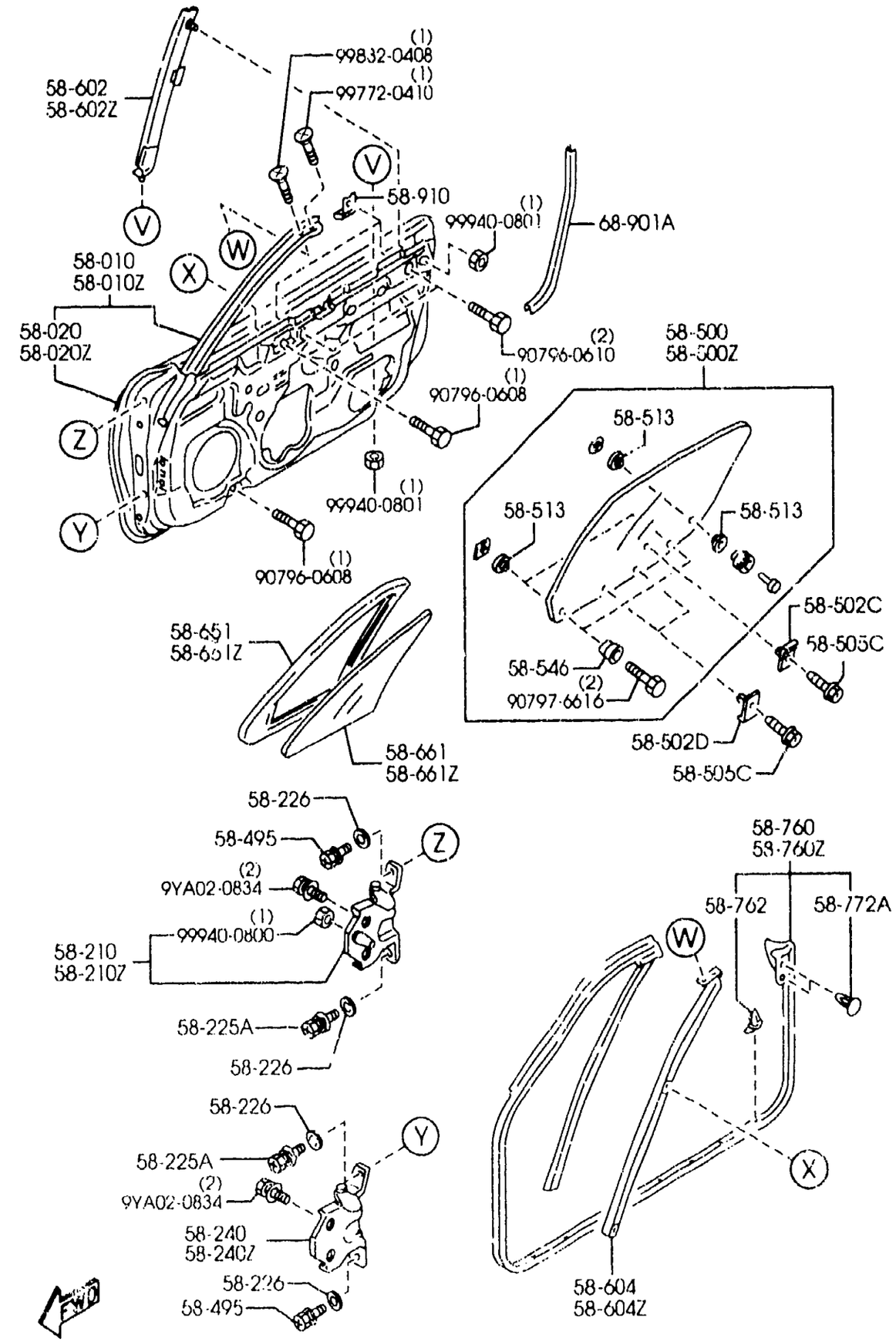

PART NO.	QTY	MODEL/RESTRICTION	MODEL/RESTRICTION	MODEL/RESTRICTION	FROM-TO
58-502D UB39-58-502A	4	GROMMET,SCREW-DOOR GLASS	VIROLE,VIS-SERRURE PORTE		
58-505C R092-58-505	6	SCREW,WINDOW REGULATOR	VIS,REGULATEUR FENETRE		
58-513 NA01-58-523	8	WASHER	RONDELLE		
58-546 H001-58-546	6	STOPPER,DOOR GLASS-FRONT	RAQUET PORTIERE GLACE-AV.		
58-602 NA01-58-603D	1	GUIDE'B'(R),GLASS	GUIDE'B'(D),GLACE		
58-602Z NA01-59-603D	1	GUIDE'B'(L),GLASS	GUIDE'B'(G),GLACE		
58-604 NC10-58-604	1	CHANNEL(R),DIVISION-DOOR	RIGOLE(D),DIVISION-PORTE		
58-604Z NC10-59-604	1	CHANNEL(L),DIVISION-DOOR	RIGOLE(G),DIVISION-PORTE		
58-651 NA01-58-651B	1	WEATHERSTRIP(R)	JOINT CAOUTCHOUC (D)		
58-651Z NA01-59-651B	1	WEATHERSTRIP(L)	JOINT CAOUTCHOUC (G)		
58-661 NB39-58-661A	1	GLASS(R),VENTILATOR	VERRE,AERATEUR		
58-661Z NB39-59-661A	1	GLASS(L),VENTILATOR	VERRE(G),AERATEUR		
58-760 NC10-58-760F	1	WEATHERSTRIP(R),DOOR	JOINT C.T.C. (D),PAVILLON		
58-760Z NC10-59-760F	1	WEATHERSTRIP(L),DOOR	JOINT CAOUTCHOUC (G), POR		

5800A FRONT DOORS

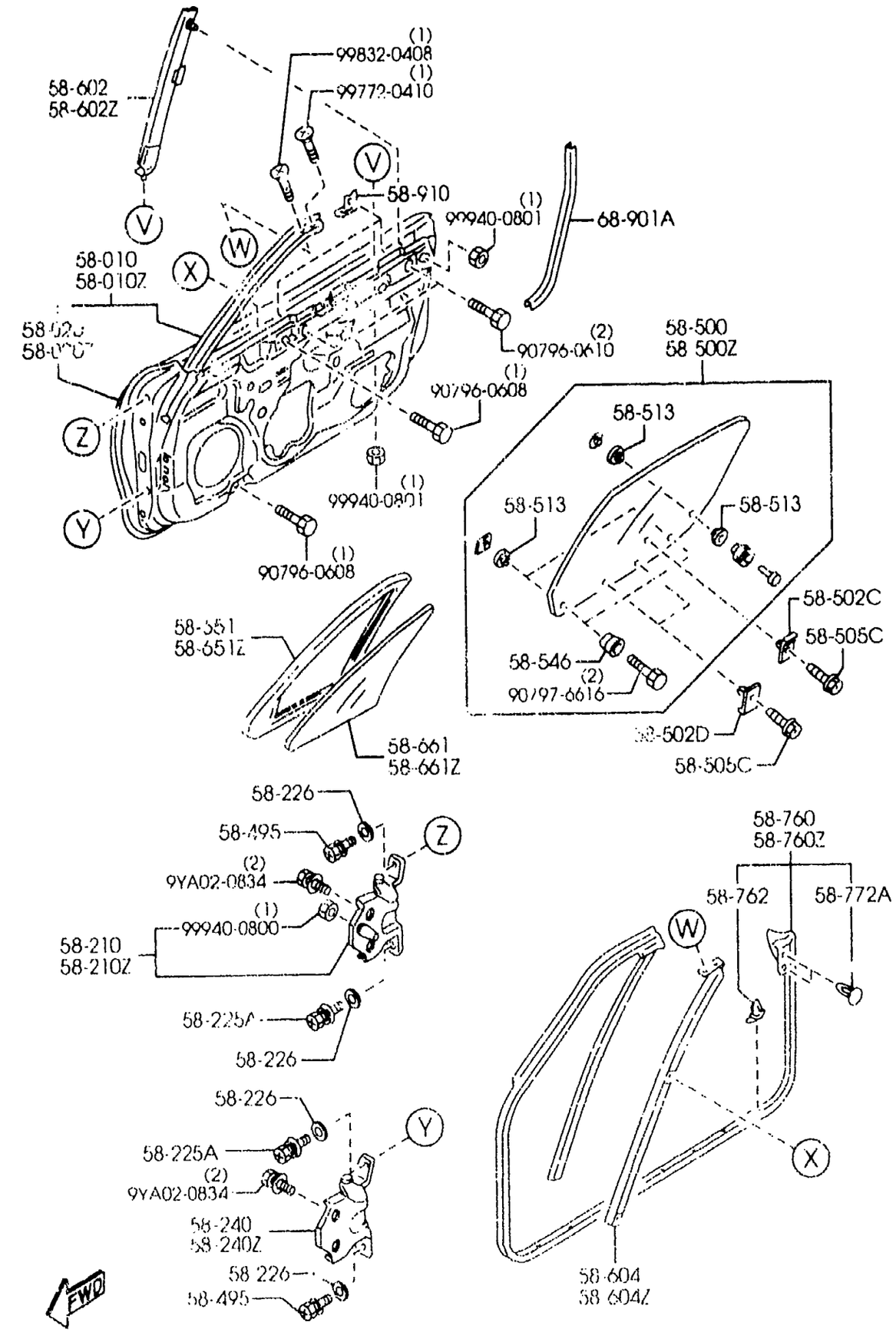

PART NO.	QTY	MODEL/RESTRICTION	MODEL/RESTRICTION	MODEL/RESTRICTION	FROM-TO
58-762		FASTENER	AGRAFE		
BC1D-58-762	36				
58-772A		FASTENER	AGRAFE		
1011-58-772	4				
58-910		STOPPER,GLASS	TAQUET, GLACE		
J002-58-910A	4				
68-901A		WELT(R),SEAMING	CACHE-COUTURE		
NC10-68-911	2				
00	INT-	NB3 NB4 NB5 NB8 BLACK	NB3 NB4 NB5 NB8 NOIR		

(W/POWER DOOR LOCK)

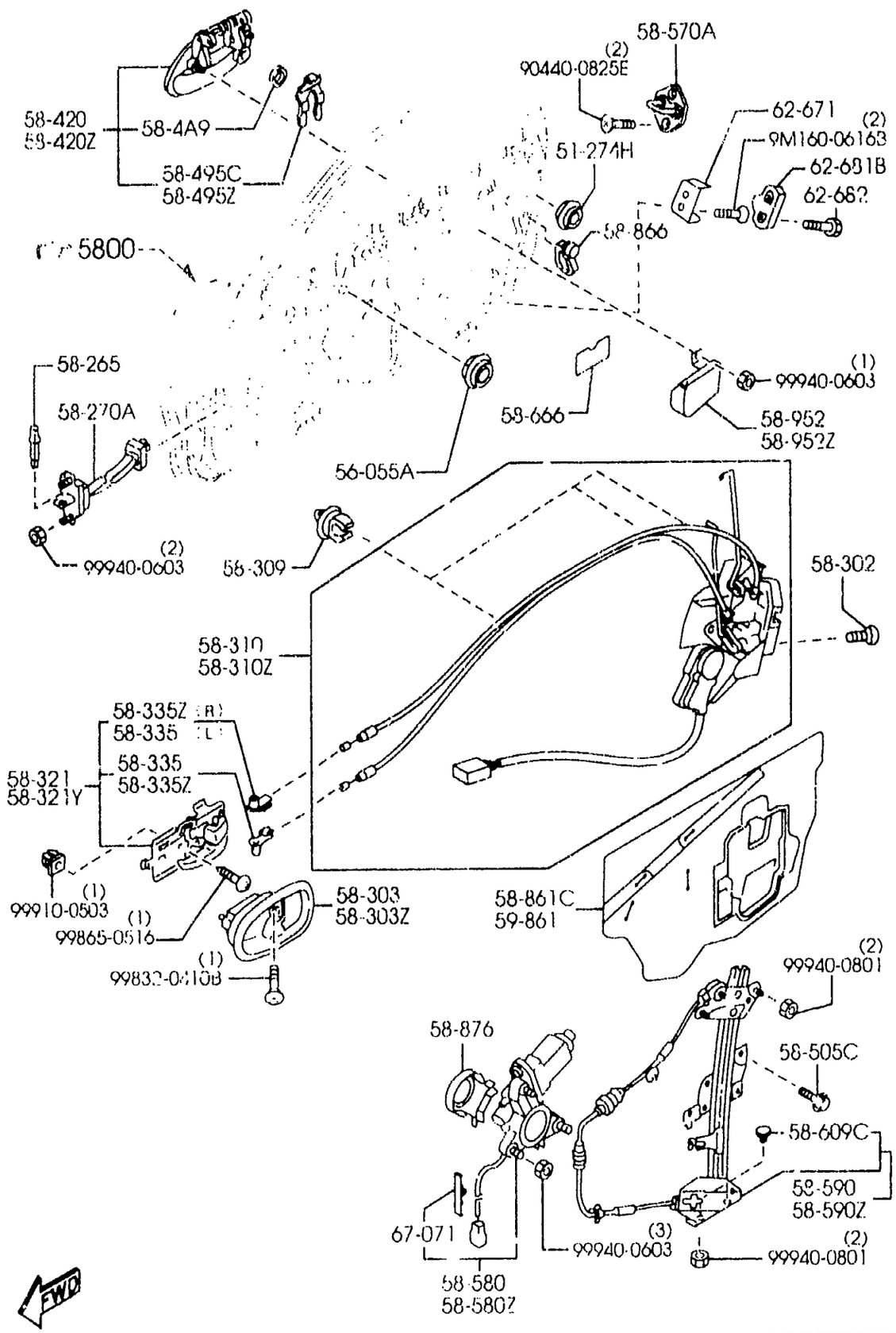

(W/O POWER DOOR LOCK)

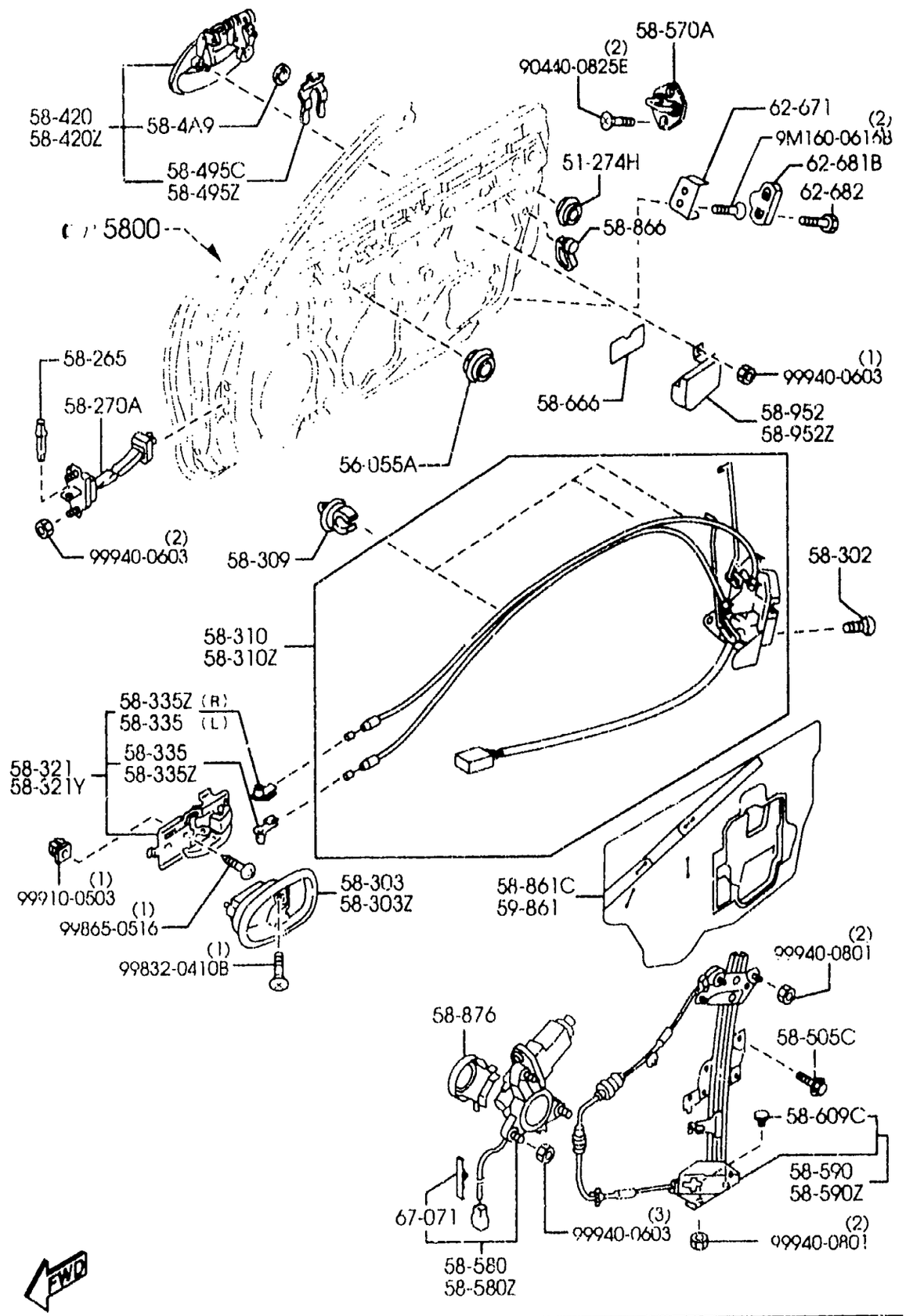

(W/POWER DOOR LOCK)

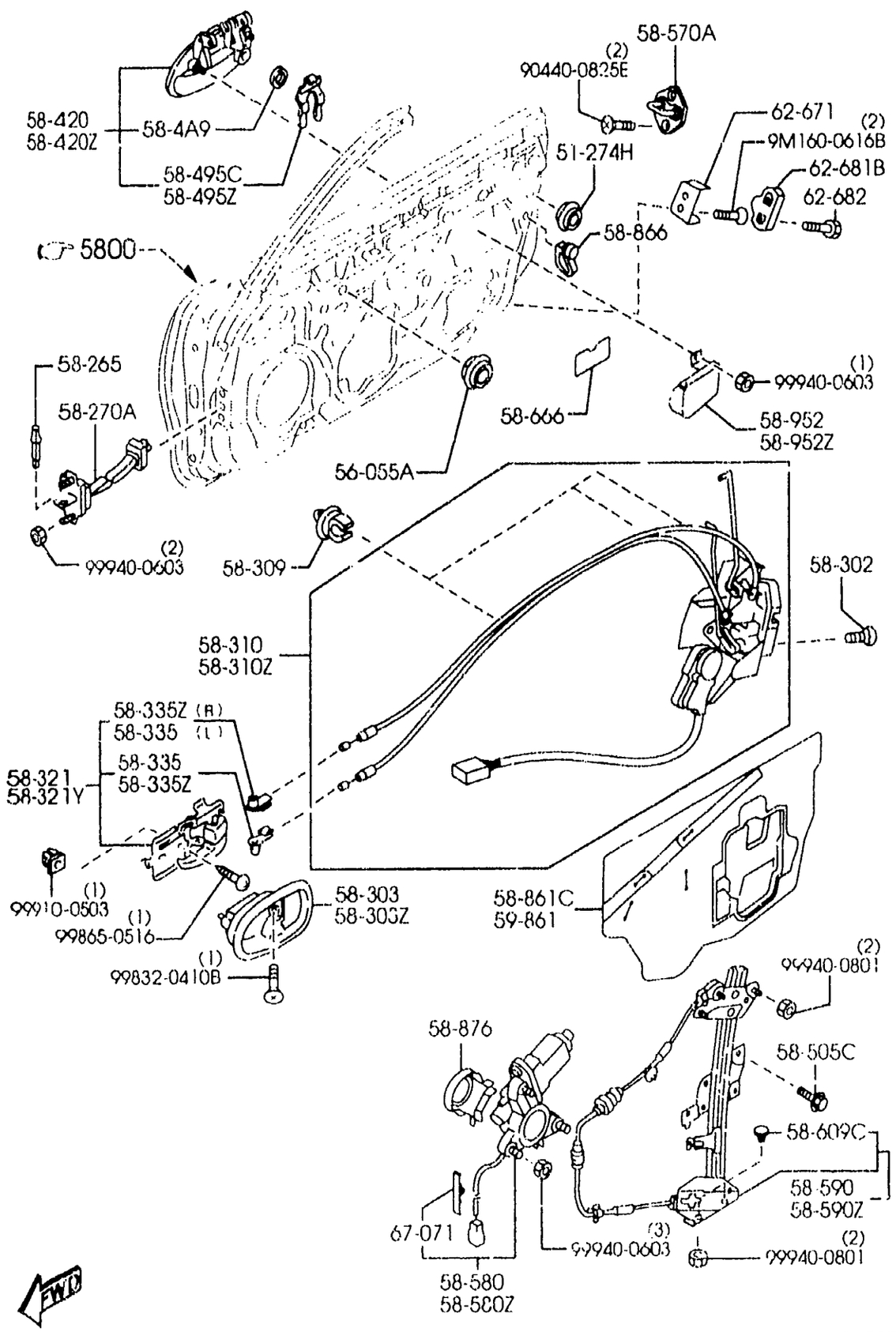

PART NO.	QTY	MODEL/RESTRICTION	MODEL/RESTRICTION	MODEL/RESTRICTION	FROM-TO
51-274H BF67-51-261	2	GROMMET	ANNEAU		
56-055A A001-56-053	2	GROMMET	ANNEAU		
58-265 BC1D-58-265	2	PIN,CHECKER	AXE,CONTROLEUR		
58-270A NA01-58-270B	2	CHECKER,DOOR	DISPOSITIF DE VERIFI CATIO		
58-302 LA01-58-302A	6	SCREW,TAPPING-DOOR L OCK	VIS,TARAUD.-SERRURE PORTE		
58-303 EA01-58-303	1	COVER(R),IN.HANDLE	CACHE, POIGNEE INT.		
02	INT-	NB3 NB4 NB5 BLACK	NB3 NB4 NB5 NOIR		
58-303Z EA01-59-303	1	COVER(L),IN.HANDLE	COUVERCLE POIGNEE(G)		
02	INT-	NB3 NB4 NB5 NB8 BLACK	NB3 NB4 NB5 NB8 NOIR		
58-309 N066-58-309	6	HOLDER,ROD	SUPPORT,TRINGLE		
58-310		LOCK(R),DOOR	SERRURE, PORTE (D)		
NC73-58-310B A (NC73-58-310C)	1	(W/POWER DOOR LOCK)			-0724
NC72-58-310B A (NC72-58-310C)	1	(W/O POWER DOOR LOCK)			-0C11
NC73-58-310C A (NC73-58-310D)	1	(W/POWER DOOR LOCK)			0724-0C11
NC72-58-310C	1	(W/O POWER DOOR LOCK)			0C11-
NC73-58-310D	1	(W/POWER DOOR LOCK)			0C11-
58-310Z		LOCK(L),DOOR	SERRURE, PORTE (G)		
NC73-59-310B A (NC73-59-310C)	1	(W/POWER DOOR LOCK)			-0724
NC72-59-310B	1	(W/O POWER DOOR LOCK			-0C11

0724 NB35**-200122
0C11 NB35**-207679

(W/O POWER DOOR LOCK)

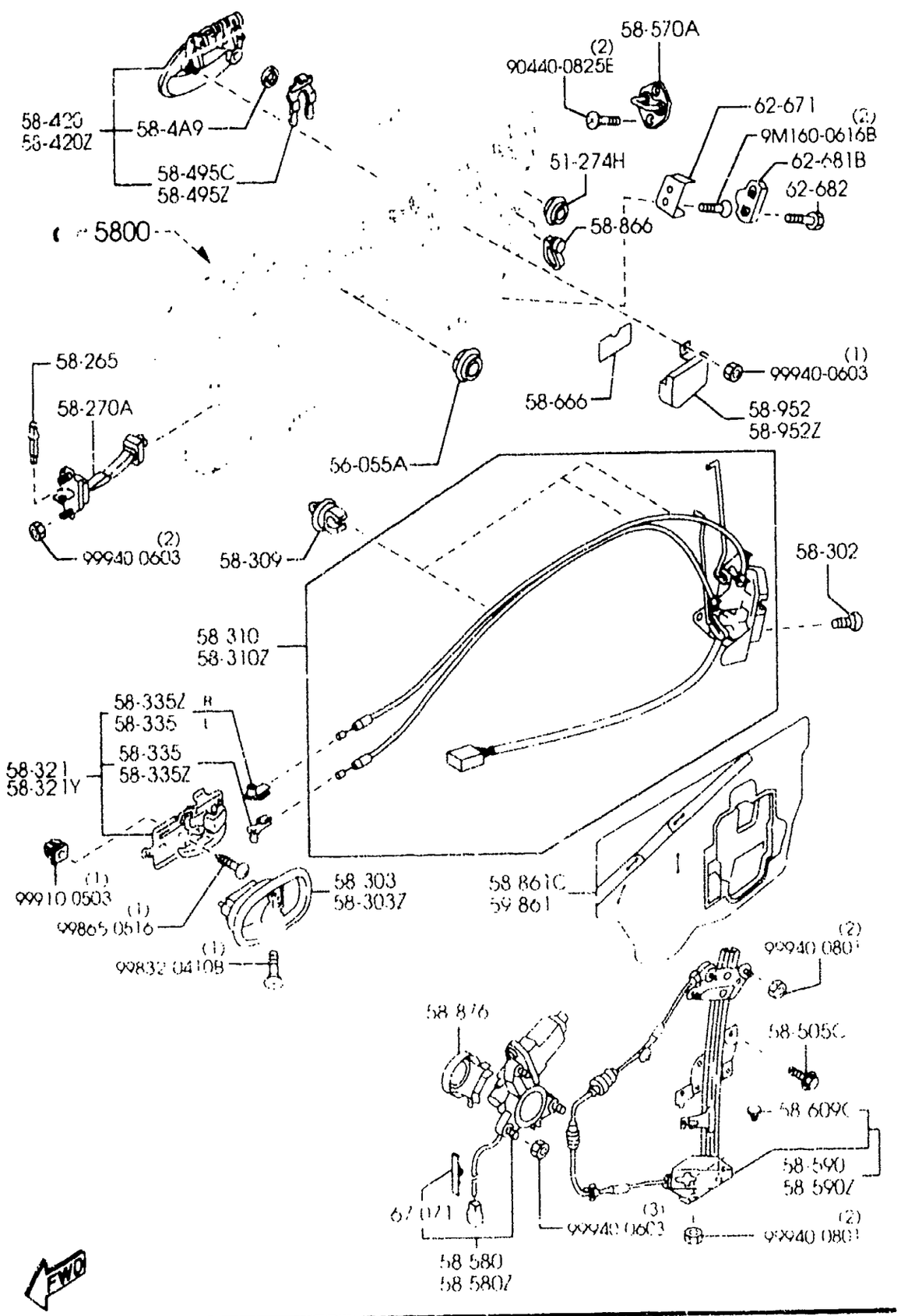

AUNA08

1N06630

PART NO.	QTY	MODEL/RESTRICTION	MODEL/RESTRICTION	MODEL/RESTRICTION	FROM-TO
CONT'D A (NC72-59-310C)		)			
NC73-59-310C A (NC73-59-310D)	1	(W/POWER DOOR LOCK)			0724-0C11
NC72-59-310C	1	(W/O POWER DOOR LOCK)			0C11-
NC73-59-310D	1	(W/POWER DOOR LOCK)			0C11-
+---------+ | 58-321 | +---------+		HANDLE(R),INNER	POIGNEE INTERIEURE (D)		
N067-58-330E	1	((W/O A. LOCK BRAKE) >(SPORT SUSP)) (W/A. LOCK BRAKE)	((S/SYST ANTIBLOC)>(SUSP. SPORTIVE)) (SYST ANTIBLOC)		
N066-58-330	1	((W/O A. LOCK BRAKE) >(NOR. SUSP)) ((W/O A. LOCK BRAKE) >(HARD SUSP))	((S/SYST ANTIBLOC)>(SUSP.NRML)) ((S/SYST ANTIBLOC)>(SUSP.FERM))		-0801
02	INT-	NB3 NB4 NB5 BLACK	NB3 NB4 NB5 NOIR		
N066-58-330A	1	((W/O A. LOCK BRAKE) >(NOR. SUSP)) ((W/O A LOCK BRAKE) >(HARD SUSP))	((S/SYST ANTIBLOC)>(SUSP.NRML)) ((S/SYST ANTIBLOC)>(SUSP.FERM))		0801-
02	INT-	NB3 NB4 NB5 NB8 BLACK	NB3 NB4 NB5 NB8 NOIR		
+---------+ | 58-321Y | +---------+		HANDLE(L),INNER	POIGNEE INTERIEURE (G)		
N067-59-330E	1	((W/O A. LOCK BRAKE) >(SPORT SUSP)) (W/A. LOCK BRAKE)	((S/SYST ANTIBLOC)>(SUSP. SPORTIVE)) (SYST ANTIBLOC)		
N066-59-330	1	((W/O A. LOCK BRAKE) >(NOR. SUSP)) ((W/O A. LOCK BRAKE) >(HARD SUSP))	((S/SYST ANTIBLOC)>(SUSP.NRML)) ((S/SYST ANTIBLOC)>(SUSP.FERM))		-0801
02	INT-	NB3 NB4 NB5 BLACK	NB3 NB4 NB5 NOIR		
N066-59-330A	1	((W/O A. LOCK BRAKE) >(NOR. SUSP)) ((W/O A. LOCK BRAKE) >(HARD SUSP))	((S/SYST ANTIBLOC)>(SUSP.NRML)) ((S/SYST ANTIBLOC)>(SUSP.FERM))		0801-
02	INT-	NB3 NB4 NB5 NB8 BLACK	NB3 NB4 NB5 NB8 NOIR		
+---------+ | 58-335 | +---------+		CLIP(R),INNER HANDLE	PINCE(D),MANETTE INT ERIEU		
N066-58-335	2				
+---------+ | 58-335Z | +---------+		CLIP(L),INNER HANDLE	PINCE'G',MANETTE INT ERIEU		
N066-59-335	2				
+---------+ | 58-4A9 | +---------+		PLUG,OUTER HANDLE	TAMPON,LEVIER EXTERI EUR		
HG30-58-4A9	2				

0724 NB35**-200122
0801 NB35**-200666
0C11 NB35**-207679

(W/POWER DOOR LOCK)

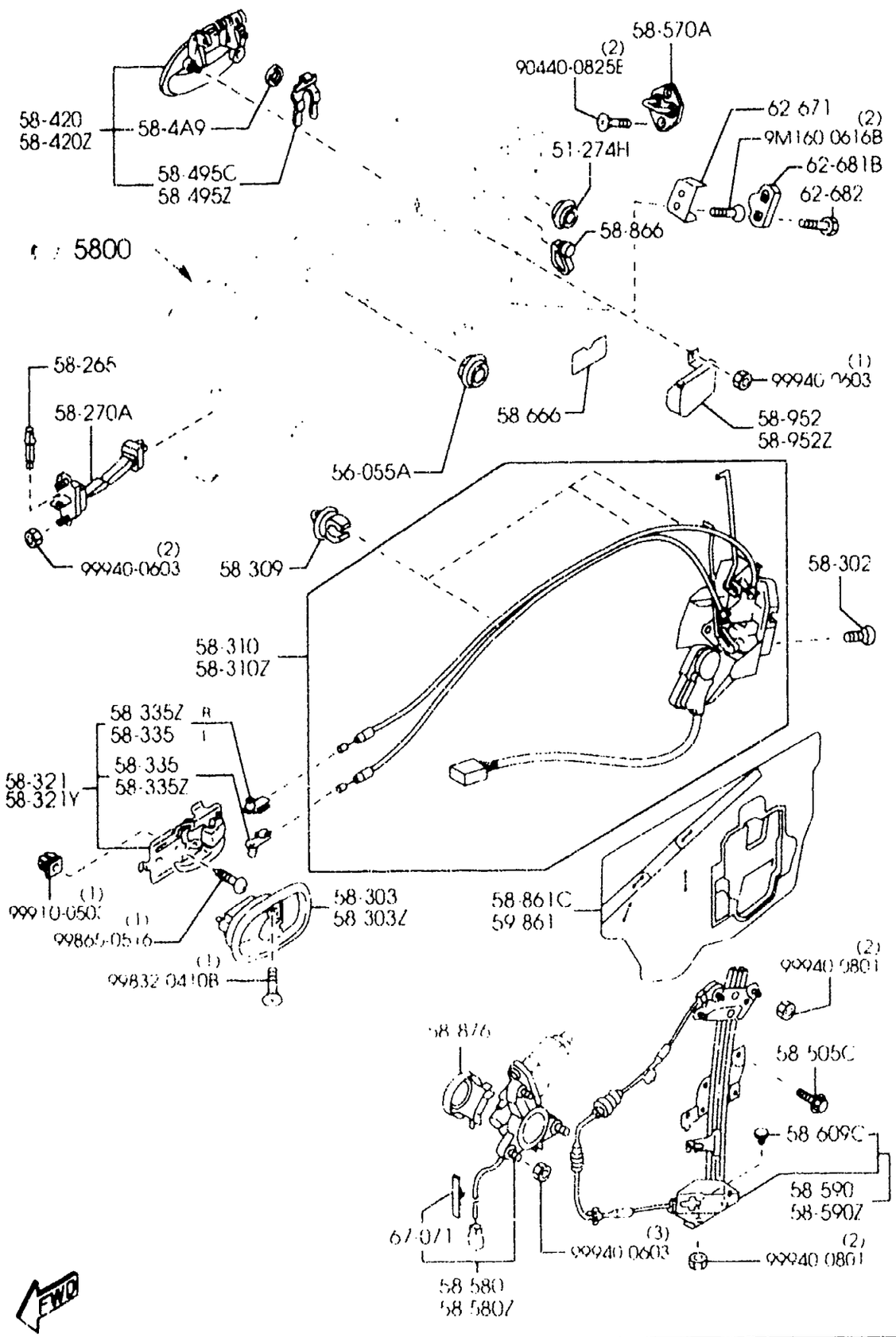

AUNA08 1N06630

PART NO.	QTY	MODEL/RESTRICTION	MODEL/RESTRICTION	MODEL/RESTRICTION	FROM-TO
58-420		HANDLE(R),OUTER	POIGNEE EXTERIEURE (D)		
GA5R-58-410F	1				-1406
HZ	EXT-	HZ SUNBURST YELLOW	HZ JAUNE BRULE		
PZ	EXT-	A3F BRILLIANT BLACK	A3F NOIR BRILLIANT		
SU	EXT-	A3E CLASSIC RED	A3E ROUGE CLASSIQUE		-0B01
08	EXT-	16W BLACK MC	16W NOIR METALLISE		
09	EXT-	A3D PURE WHITE	A3D BLANC PURE		
10	EXT-	A3E CLASSIC RED CLE	A3E ROUGE ETERNEL		0B01-1406
47	EXT-	18J SPACE GREEN MC	18J VERT ESPACE MC		
50	EXT-	22A SUPREM BLUE MC	22A BLEU SUPREME METALLI		
51	EXT-	23C CRYSTAL BLUE	23C BLEU CRISTAL		
55	EXT-	A3V NEO GREEN CLE	A3V NEO-VERT CLAIR		
61	EXT-	24A STARRY BLUE MC	24A BLUE ETOILE MICA		
68	EXT-	22V SUNLIGHT SILVER M	22V ARGENT LUMIERE SOLEI		
GA5R-58-410G	1				1406-
HZ	EXT-	HZ SUNBURST YELLOW	HZ JAUNE BRULE		
PZ	EXT-	A3F BRILLIANT BLACK	A3F NOIR BRILLIANT		
08	EXT-	16W BLACK MC	16W NOIR METALLISE		
09	EXT-	A3D PURE WHITE	A3D BLANC PURE		
10	EXT-	A3E CLASSIC RED CLE	A3E ROUGE ETERNEL		
47	EXT-	18J SPACE GREEN MC	18J VERT ESPACE MC		
50	EXT-	22A SUPREM BLUE MC	22A BLEU SUPREME METALLI		
51	EXT-	23C CRYSTAL BLUE	23C BLEU CRISTAL		
55	EXT-	A3V NEO GREEN CLE	A3V NEO-VERT CLAIR		
61	EXT-	24A STARRY BLUE MC	24A BLUE ETOILE MICA		
68	EXT-	22V SUNLIGHT SILVER M	22V ARGENT LUMIERE SOLEI		
76	EXT-	26S BLAZING YELLOW MC	26S JAUNE DE FLAMBAGE MI		
58-420Z		HANDLE(L),OUTER	POIGNEE EXTERIEURE (G)		
EA01-59-410F	1				-1406
HZ	EXT-	HZ SUNBURST YELLOW	HZ JAUNE BRULE		
PZ	EXT-	A3F BRILLIANT BLACK	A3F NOIR BRILLIANT		

0B01 NB35**-206344
1406 NB35**-216714

(W/O POWER DOOR LOCK)

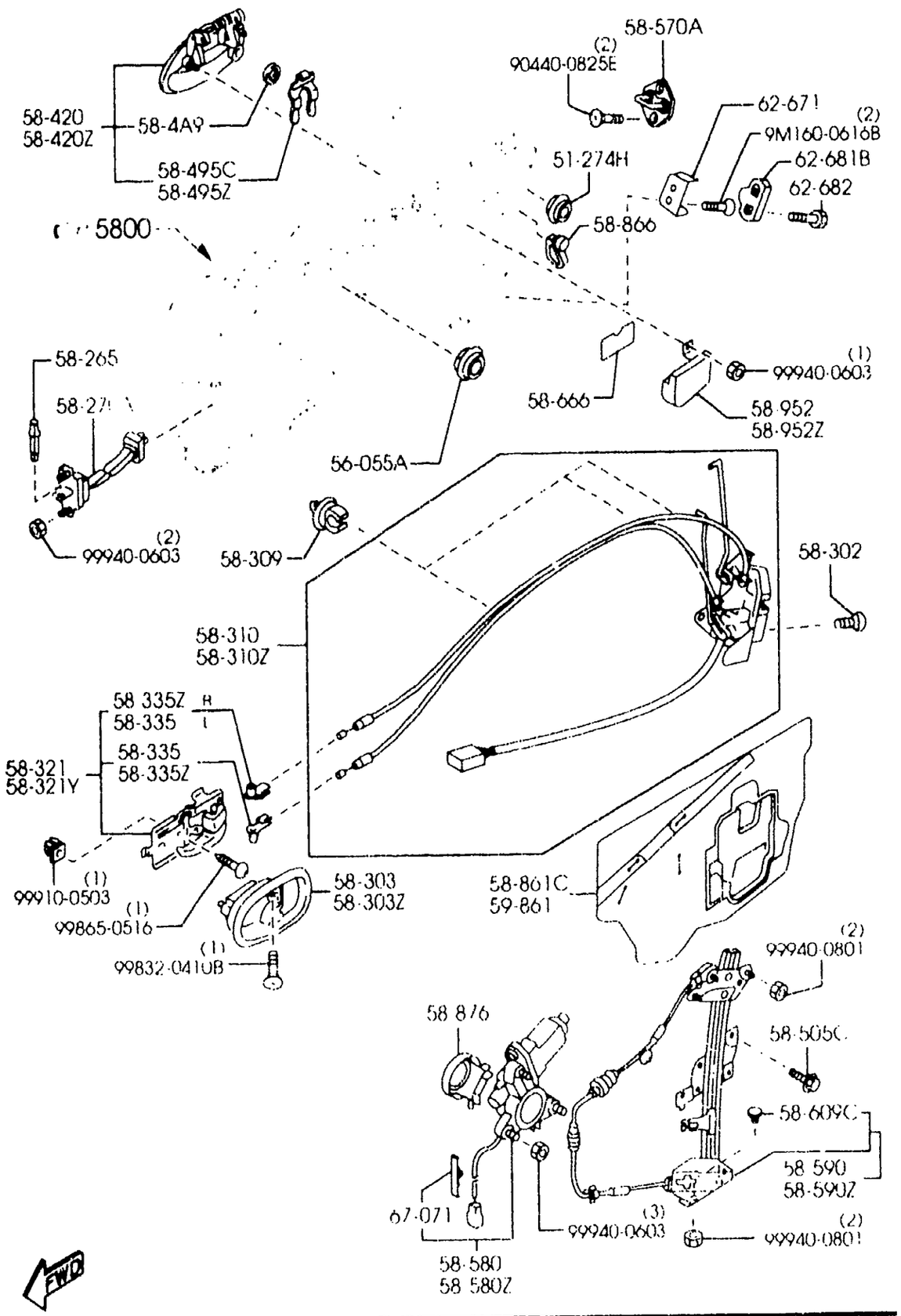

AUNA08 1N06630

PART NO.	QTY	MODEL/RESTRICTION	MODEL/RESTRICTION	MODEL/RESTRICTION	FROM-TO
CONT'D					
SU	EXT-	A3E CLASSIC RED	A3E ROUGE CLASSIQUE		-0B01
08	EXT-	16W BLACK MC	16W NOIR METALLISE		
09	EXT-	A3D PURE WHITE	A3D BLANC PURE		
10	EXT-	A3E CLASSIC RED CLE	A3E ROUGE ETERNEL		0B01-1406
47	EXT-	18J SPACE GREEN MC	18J VERT ESPACE MC		
50	EXT-	22A SUPREM BLUE MC	22A BLEU SUPREME METALLI		
51	EXT-	23C CRYSTAL BLUE M.	23C BLEU CRYSTAL METALLI		
55	EXT-	A3V NEO GREEN CLE	A3V NEO-VERT CLAIR		
61	EXT-	24A STARRY BLUE MC	24A BLUE ETOILE MICA		
68	EXT-	22V SUNLIGHT SILVER M	22V ARGENT LUMIERE SOLEI		
EA01-59-410G	1				1406-
HZ	EXT-	HZ SUNBURST YELLOW	HZ JAUNE BRULE		
PZ	EXT-	A3F BRILLIANT BLACK	A3F NOIR BRILLIANT		
08	EXT-	16W BLACK MC	16W NOIR METALLISE		
09	EXT-	A3D PURE WHITE	A3D BLANC PURE		
10	EXT-	A3E CLASSIC RED CLE	A3E ROUGE ETERNEL		
47	EXT-	18J SPACE GREEN MC	18J VERT ESPACE MC		
50	EXT-	22A SUPREM BLUE MC	22A BLEU SUPREME METALLI		
51	EXT-	23C CRYSTAL BLUE M.	23C BLEU CRYSTAL METALLI		
55	EXT-	A3V NEO GREEN CLE	A3V NEO-VERT CLAIR		
61	EXT-	24A STARRY BLUE MC	24A BLUE ETOILE MICA		
68	EXT-	22V SUNLIGHT SILVER M	22V ARGENT LUMIERE SOLEI		
76	EXT-	26S BLAZING YELLOW MC	26S JAUNE DE FLAMBAGE MI		
+---------+ | 58-495C | +---------+ GT2G-58-495	1	RETAINER(R),LOCK CYLINDER	ARRET(D),CYLINDRE BLOCK		
+---------+ | 58-495Z | +---------+ GT2G-59-495	1	RETAINER(L),LOCK CYLINDER	ARRET(G),CYLINDRE BLOCK		
+---------+ | 58-505C | +---------+ B092-58-505	6	SCREW,WINDOW REGULATOR	VIS,REGULATEUR FENETRE		

0B01 NB35**-206344
1406 NB35**-216714

(W/POWER DOOR LOCK)

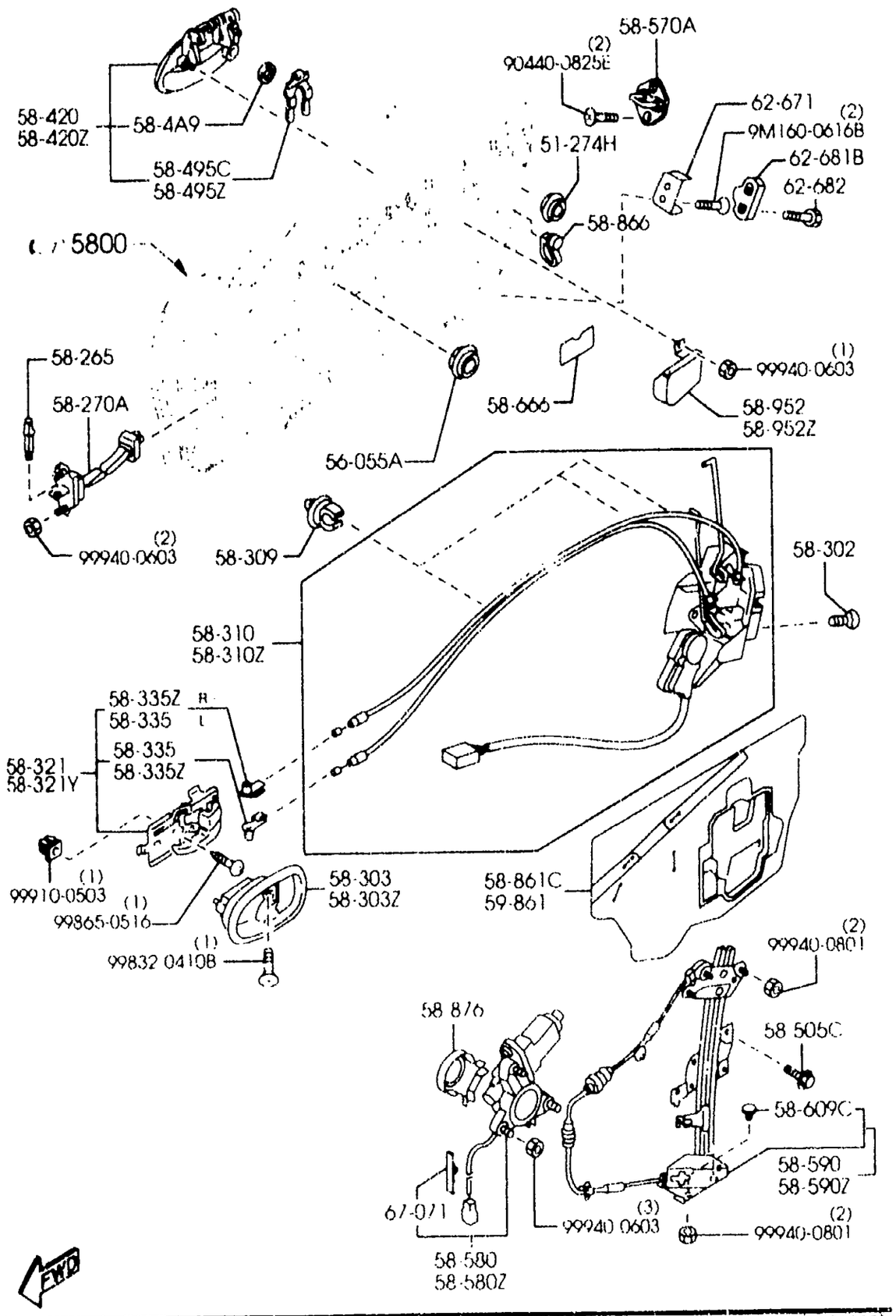

PART NO.	QTY	MODEL/RESTRICTION	MODEL/RESTRICTION	MODEL/RESTRICTION	FROM-TO
58-570A FD01-58-361	2	STRIKER	GACHE		
58-580 NC11-58-58XA	1	MOTOR(R),WINDOW	MOTEUR(D),LEVE-GLACE		
58-580Z NC11-59-58XA	1	MOTOR(L),WINDOW	MOTEUR(G),LEVE-GLACE		
58-590 NC11-58-590F	1	ARM/BASE(R),WINDOW	BASE(D)MANIVELLE		
58-590Z NC11-59-590F	1	ARM/BASE(L),WINDOW	BASE(G)MANIVELLE		
58-609C NA01-58-609A	4	BOLT	BOULON		
58-666 N066-58-862	1	SHEET	TOLE		
58-861C N066-58-861C A (N066-58-861D)	1	SCREEN(R),FRONT DOOR (FOR 2-SPEAKER) (FOR 4-SPEAKER(STD.))	ECRAN(D),PORTE AV		-1301
N067-58-861C A (N067-58-861D)	1	(FOR 4-SPEAKER(BOSE))			-1301
N066-58-861D	1	(FOR 2-SPEAKER) (FOR 4-SPEAKER(STD.))			1301-
N067-58-861D	1	(FOR 4-SPEAKER(BOSE))			1301-
58-866 B038-58-866	2	CLIP	ATTACHE		
58-876 NC11-58-562	2	COVER,SERVICE	CHAPEAU		
58-952 NC10-58-960C	1	PAD(R)	FIBRANNE(D)		

1301 NB35**-213465

(W/O POWER DOOR LOCK)

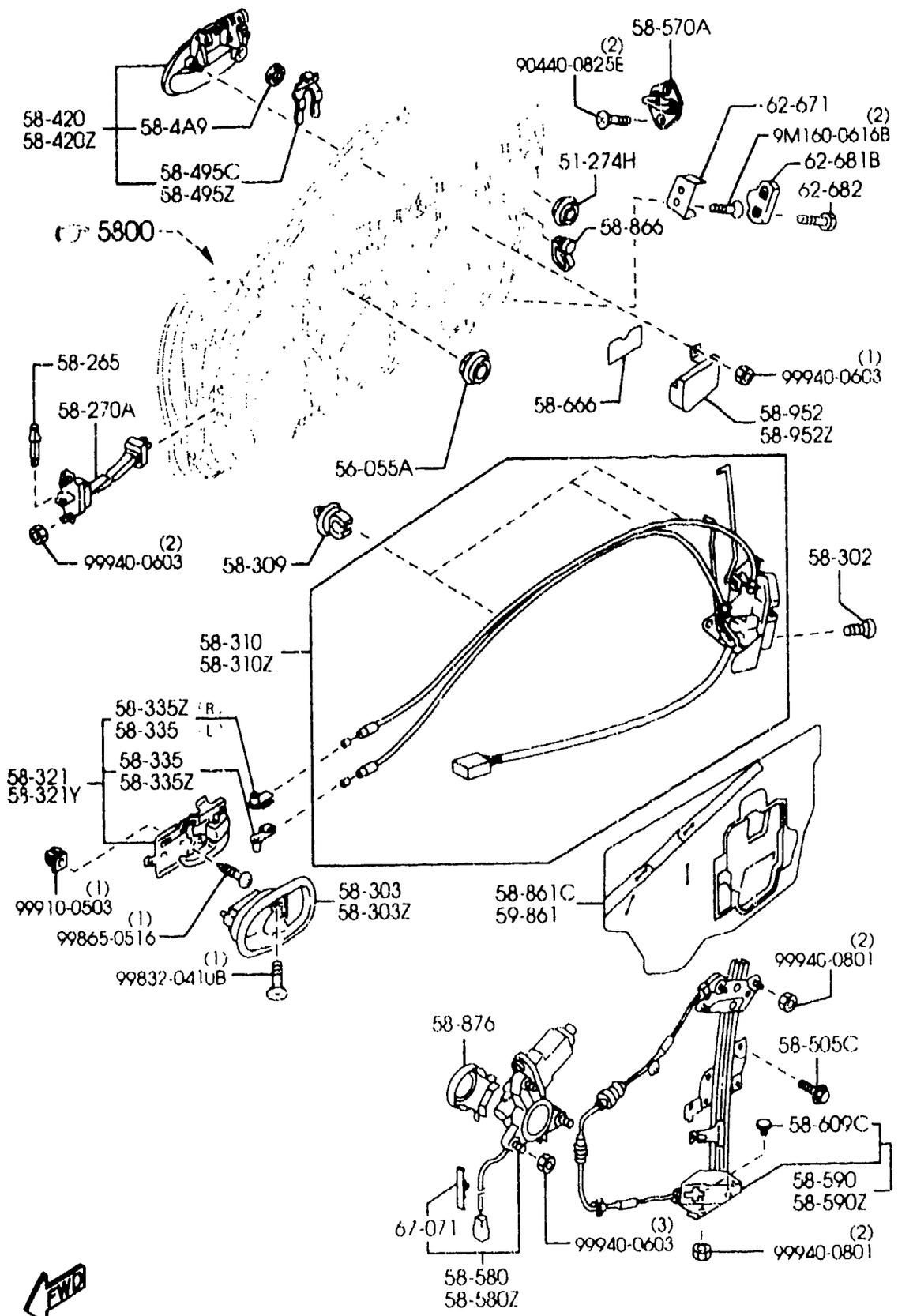

PART NO.	QTY	MODEL/RESTRICTION	MODEL/RESTRICTION	MODEL/RESTRICTION	FROM-TO
58-952Z NC10-59-960C	1	PAD(L)	FIBRANNE(G)		
59-861 N066-59-861D A (N066-59-861E)	1	SCREEN(L),FRONT DOOR (FOR 2-SPEAKER) (FOR 4-SPEAKER(STD.))	ECRAN(D),PORTE AVANT		-1301
N067-59-861D A (N067-59-861E)	1	(FOR 4-SPEAKER(BOSE))			-1301
N066-59-861E	1	(FOR 2-SPEAKER) (FOR 4-SPEAKER(STD.))			1301-
N067-59-861E	1	(FOR 4-SPEAKER(BOSE))			1301-
62-671 S084-62-671A	2	DOVETAIL,LIFT GATE	QUEUE-D'ARONDE,HAYON AR		
62-681B NA01-62-681	2	WEDGE,DOOR-FRONT	CALE,PORTIER-AV		
62-682 B216-62-682	4	SCREW,WEDGE-LIFT GATE	VIS,CALE-BARRIERE BASCULE		
67-071 B111-67-C99	2	CLIP	CLIP		

1301 NB35**-213465

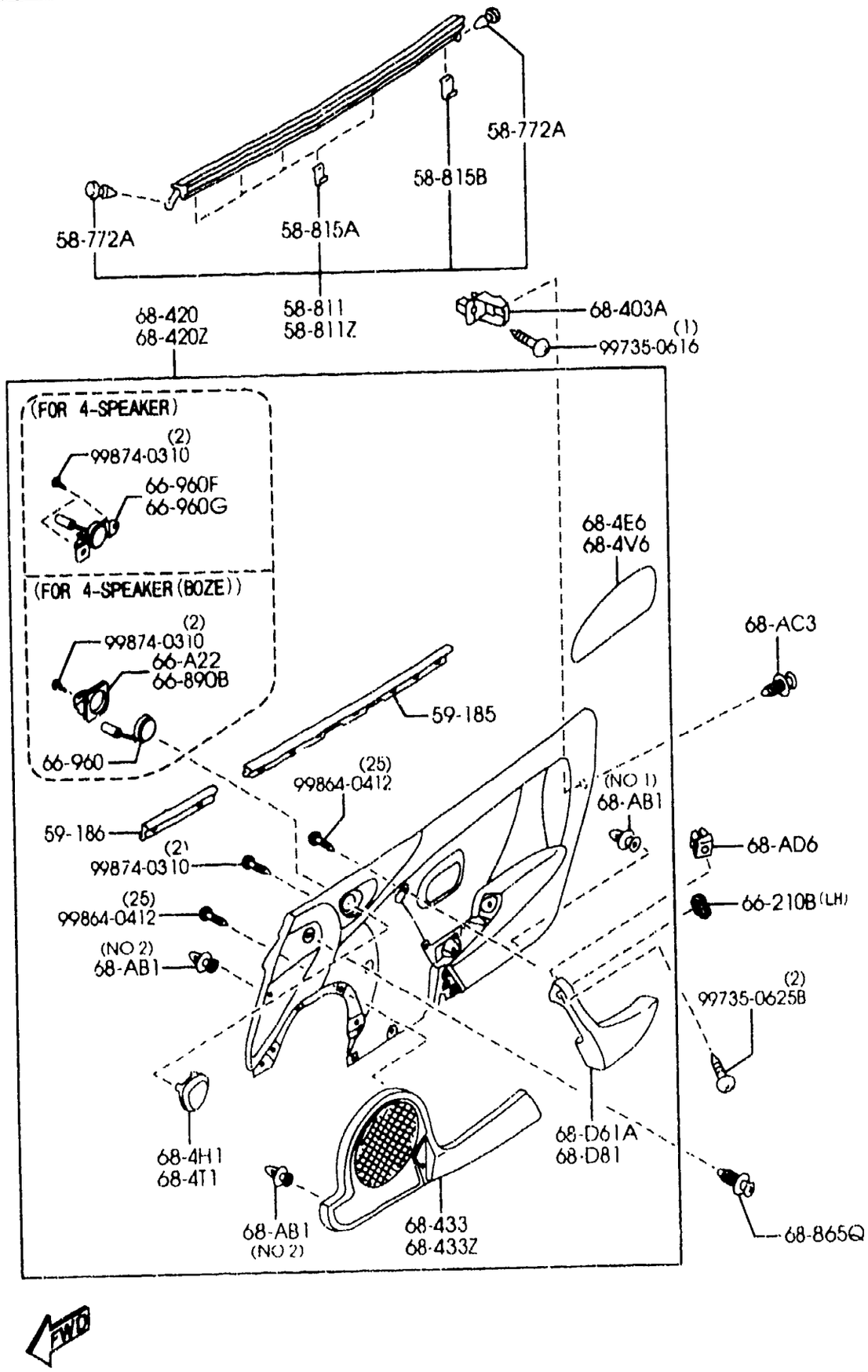

(1N11670)

PART NO.	QTY	MODEL/RESTRICTION	MODEL/RESTRICTION	MODEL/RESTRICTION	FROM-TO
58-772A 1011-58-772	4	FASTENER	AGRAFE		
58-811 NA01-58-810D	1	WEATHERSTRIP(R),OUT.	PROFILE D'ETANCH.EXT .(D)		
58-811Z NA01-59-810D	1	WEATHERSTRIP(L),OUT.	PROFILE D'ETANCH.EXT .(G)		
58-815A NA01-58-815	8	CLIP,WEATHERSTRIP-OU TER	ATTACHE,BOURRELET ET A-EXT		
58-815B B157-58-815	2	CLIP'A',WEATHERSTRIP -OUT	PINCE'A',RESISTANT I NTEMP		
59-185 NA01-58-821A	2	WEATHERSTRIP NO.1	PROFILE D'ETANCH.NO 1		
59-186 NC11-58-821	2	WEATHERSTRIP NO.2	PROFILE D'ETANCH.NO 2		
66-A22 NC12-66-9B2A	1	BRACKET,AMP (FOR 4-SPEAKER(BOSE))	SUPPORT,AMP.		
66-210B NC72-66-660	1	SWITCH,DOOR LOCK (W/POWER DOOR LOCK)	INTERR.DE VERROUILLA GE,		
02	INT-	NB3 NB5 BLACK	NB3 NB5 NOIR		
Z1	INT-	NB4 NB8 TAN	NB4 NB8 TAN		
66-890B NC12-66-9B1A	1	BRACKET (FOR 4-SPEAKER(BOSE))	SUPPORT		
66-960 NC12-66-960	2	SPEAKER,LOUD-FRONT (FOR 4-SPEAKER(BOSE))	HAUT PARLEUR		
66-960F NC23-66-96X	1	SPEAKER(R),LOUD-FRT (FOR 4-SPEAKER)	PARLEUR(D),HAUT-AVAN T		

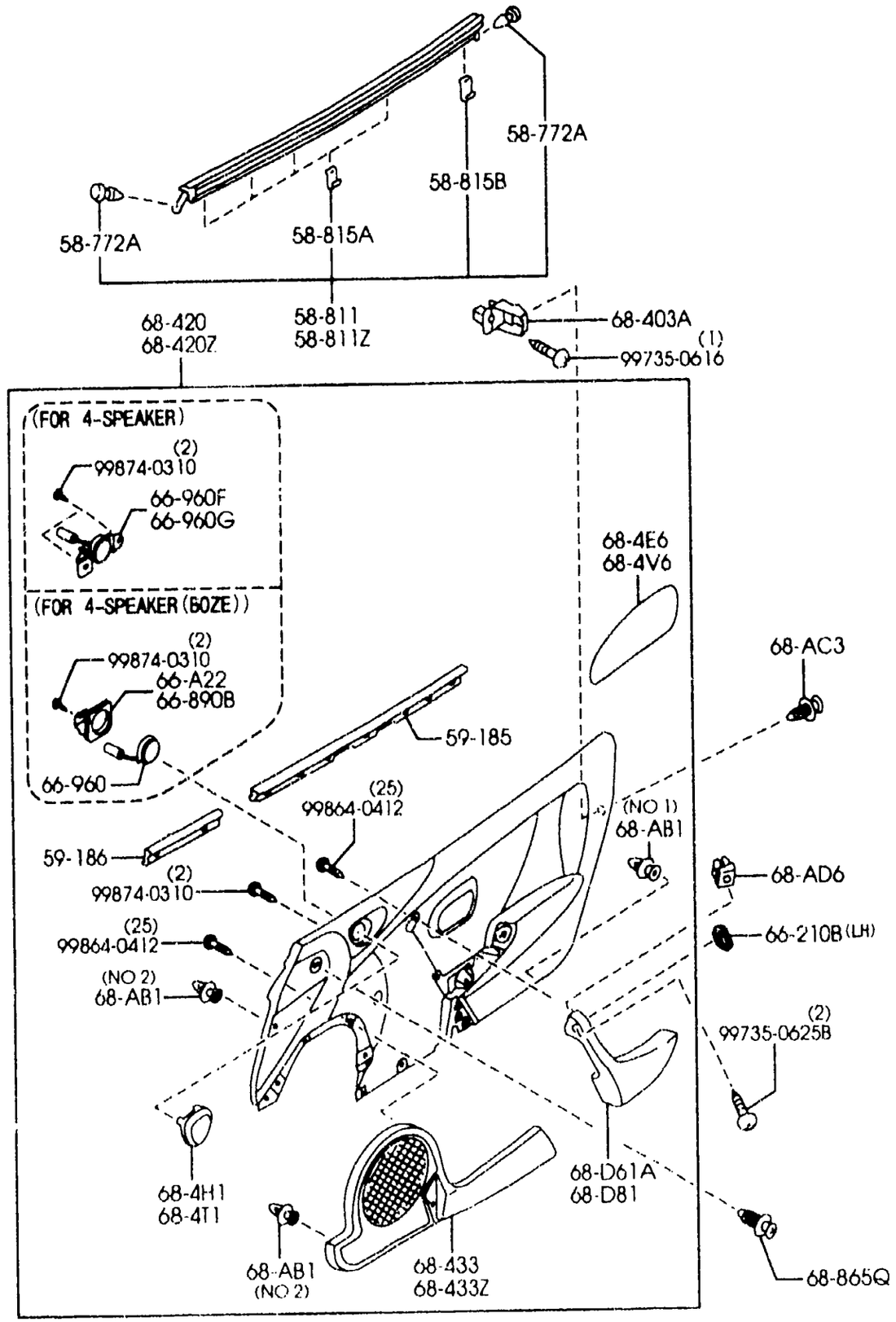

(1N11670)

PART NO.	QTY	MODEL/RESTRICTION	MODEL/RESTRICTION	MODEL/RESTRICTION	FROM-TO
66-960G		SPEAKER(L),LOUD-FRONT	PARLEUR(G),HAUT-AVANT		
NC23-66-96Y	1	(FOR 4-SPEAKER)			
68-AB1		FASTENER	AGRAFE		
N066-68-ABX	8	(ILLUST. NO.2)			
GA2A-68-AB1A	4	(ILLUST. NO.1)			
68-AC3		FASTENER	AGRAFE		
B467-68-AC3	4				
02	INT-	NB3 BLACK	NB3 NOIR		
21	INT-	NB4 NB8 TAN	NB4 NB8 TAN		
68-AD6		GROMMET,SCREW	PROTECTEUR, VIS		
B481-68-AD6	4				-1823
*N066-68-AD6	4				1823-
68-D61A		HANDLE(R),PULL-FRT	POIGNEE(D),TRACTION-AV		
N066-68-D71B	1				
02	INT-	NB3 NB5 BLACK	NB3 NB5 NOIR		
21	INT-	NB4 TAN	NB4 TAN		
68-D81		HANDLE(L),PULL-FRT	POIGNEE(G),TRACTION-AV		
NC73-6R-D81C	1	(W/POWER DOOR LOCK)			
02	INT-	NB3 NB5 BLACK	NB3 NB5 NOIR		
21	INT-	NB4 NB8 TAN	NB4 NB8 TAN		
N066-68-D81B	1	(W/O POWER DOOR LOCK)			
02	INT-	NB3 NB5 BLACK	NB3 NB5 NOIR		
21	INT-	NB4 NB8 TAN	NB4 NB8 TAN		
68-4E6		PLATE(R)	PLAQUE(D)		
N066-68-4E6	1				
02	INT-	NB3 BLACK	NB3 NOIR		
21	INT-	NB4 NB8 TAN	NB4 NB8 TAN		
68-4H1		GRILLE(R),SPEAKER	GRILLE(D),HAUT PARLEUR		
NC10-68-4H1	1				

1823 NB35**-221400

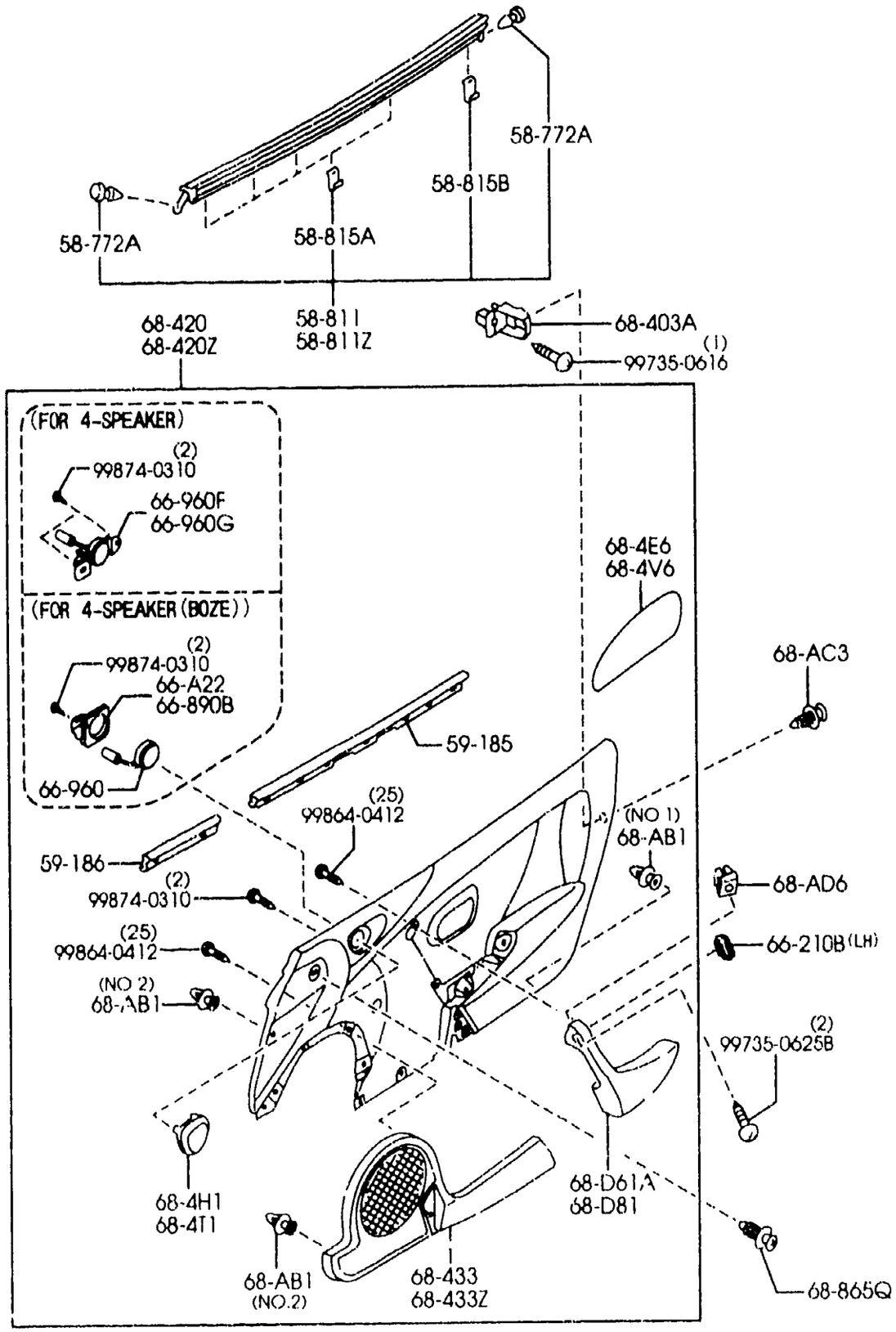

PART NO.	QTY	MODEL/RESTRICTION	MODEL/RESTRICTION	MODEL/RESTRICTION	FROM-TO
68-4T1		GRILLE(L),SPEAKER	GRILLE(G),HAUT PARLEUR		
NC10-68-4W1	1				
68-4V6		PLATE(L)	PLAQUE(G)		
N066-68-4V6	1				
02	INT-	NB3 BLACK	NB3 NOIR		
21	INT-	NB4 NB8 TAN	NB4 NB8 TAN		
68-403A		BRACKET,TRIM	SUPPORT,ASSIETTE-PORTE AV		
NC10-68-403	4				
68-420		TRIM(R),DOOR	GARNITURE (D), PORTE		
NC72-68-420E	1	(FOR 2-SPEAKER)			
02	INT-	NB3 BLACK	NB3 NOIR		
21	INT-	NB4 NB8 BLACK/TAN	NB4 NB8 NOIR/TAN		
NC74-68-420E	1	(FOR 4-SPEAKER)			
02	INT-	NB3 BLACK	NB3 NOIR		
21	INT-	NB4 NB8 BLACK/TAN	NB4 NB8 NOIR/TAN		
NC76-68-420E	1	(FOR 4-SPEAKER(BOSE))			
02	INT-	NB3 BLACK	NB3 NOIR		
21	INT-	NB4 NB8 BLACK/TAN	NB4 NB8 NOIR/TAN		
68-420Z		TRIM(L),DOOR	GARNITURE (G), PORTE		
NC72-68-450E	1	(FOR 2-SPEAKER+W/O POWER DOOR LOCK)			
02	INT-	NB3 BLACK	NB3 NOIR		
21	INT-	NB4 NB8 BLACK/TAN	NB4 NB8 NOIR/TAN		
NC73-68-450E	1	(FOR 2-SPEAKER+W/POWER DOOR LOCK)			
02	INT-	NB3 BLACK	NB3 NOIR		
21	INT-	NB4 NB8 BLACK/TAN	NB4 NB8 NOIR/TAN		
NC74-68-450E	1	(FOR 4-SPEAKER+W/O POWER DOOR LOCK)			
02	INT-	NB3 BLACK	NB3 NOIR		
21	INT-	NB4 NB8 BLACK/TAN	NB4 NB8 NOIR/TAN		
NC75-68-450E	1	(FOR 4-SPEAKER+W/POWER DOOR LOCK)			
02	INT-	NB3 BLACK	NB3 NOIR		

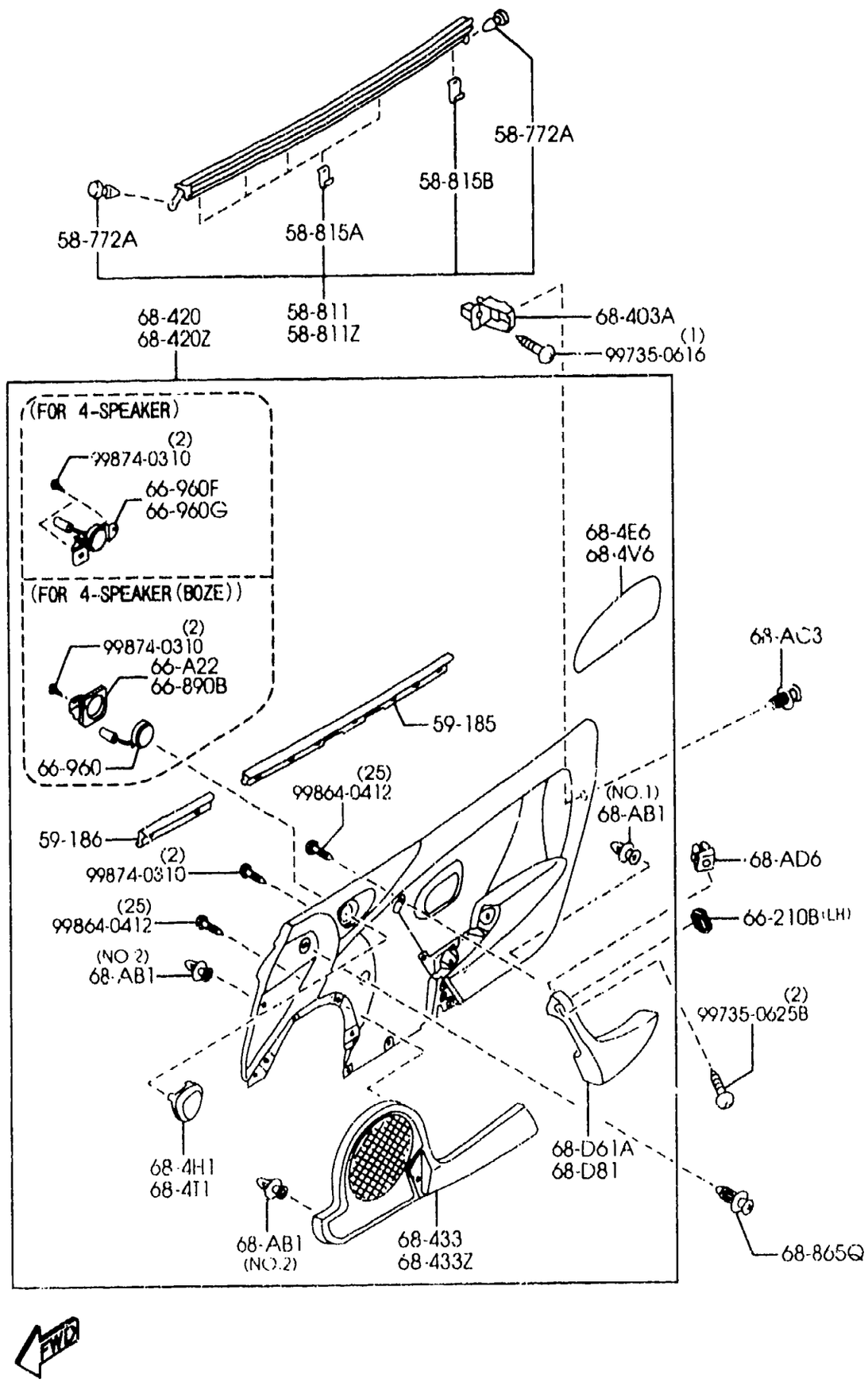

PART NO.	QTY	MODEL/RESTRICTION	MODEL/RESTRICTION	MODEL/RESTRICTION	FROM-TO
CONT'D					
21	INT-	NB4 NB8 BLACK/TAN	NB4 NB8 NOIR/TAN		
NC76-68-450E	1	(FOR 4-SPEAKER(BOSE))			
02	INT-	NB3 BLACK	NB3 NOIR		
21	INT-	NB4 NB8 BLACK/TAN	NB4 NB8 NOIR/TAN		
68-433		POCKET(R),DOOR TRIM	POCHE(D),		
N066-68-4C1A	1	(FOR 2-SPEAKER) (FOR 4-SPEAKER)			
02	INT-	NB3 NB5 BLACK	NB3 NB5 NOIR		
21	INT-	NB4 NB8 TAN	NB4 NB8 TAN		
N068-68-4C1A	1	(FOR 4-SPEAKER(BOSE))			
02	INT-	NB3 NB5 BLACK	NB3 NB5 NOIR		
21	INT-	NB4 NB8 TAN	NB4 NB8 TAN		
68-433Z		POCKET(L),DOOR TRIM	POCHE(G),		
N066-68-4N1A	1	(FOR 2-SPEAKER) (FOR 4-SPEAKER)			
02	INT-	NB3 NB5 BLACK	NB3 NB5 NOIR		
21	INT-	NB4 NB8 TAN	NB4 NB8 TAN		
N068-68-4N1A	1	(FOR 4-SPEAKER(BOSE))			
02	INT-	NB3 NB5 BLACK	NB3 NB5 NOIR		
21	INT-	NB4 NB8 TAN	NB4 NB8 TAN		
68-865Q		FASTENER	AGRAFE		
0J21-68-885B	2				
02	INT-	NB3 NB4 NB5 NB8 BLACK	NB3 NB4 NB5 NB8 NOIR		

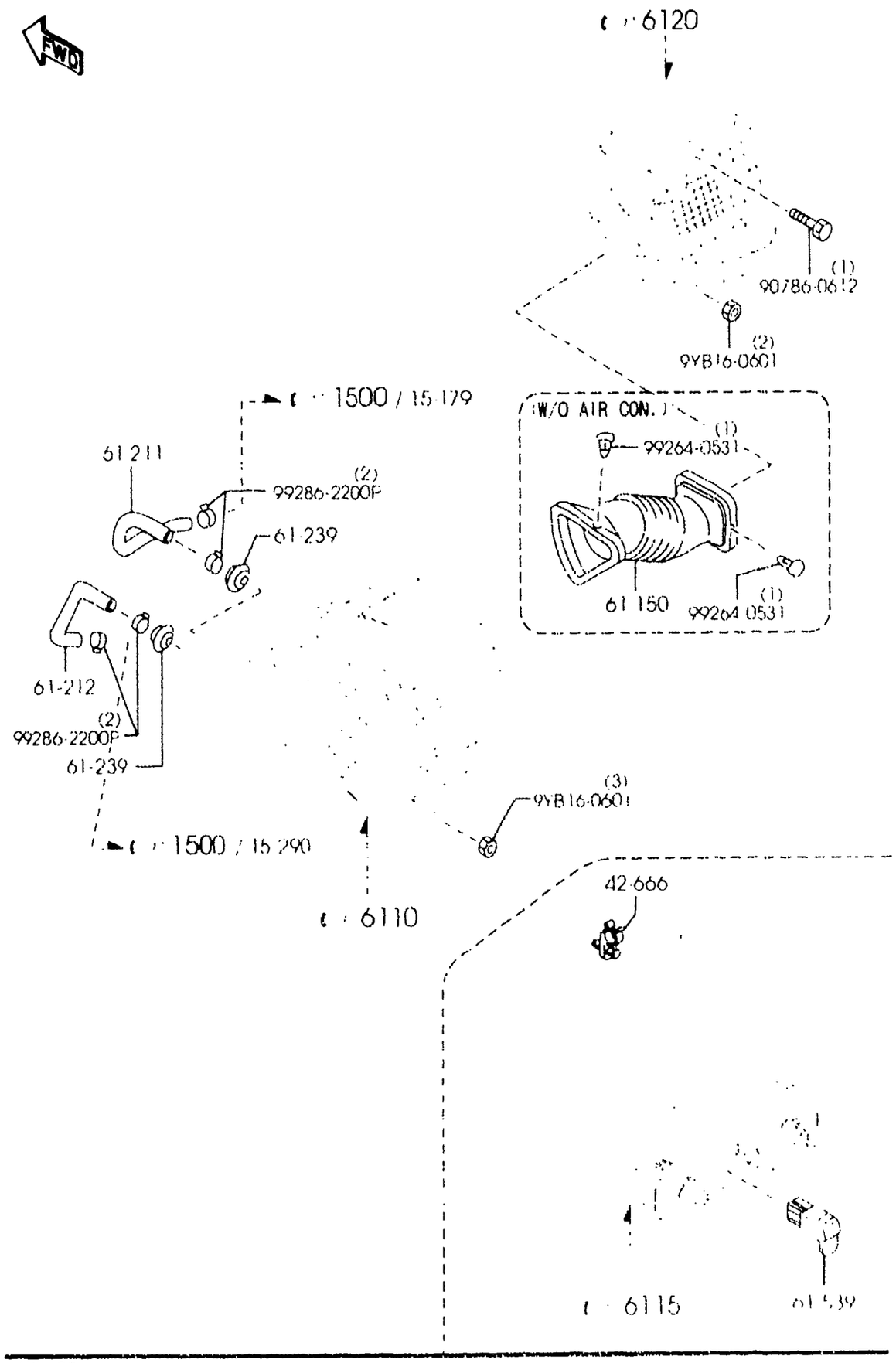

PART NO.	QTY	MODEL/RESTRICTION	MODEL/RESTRICTION	MODEL/RESTRICTION	FROM-TO
42-666		CLIP	ATTACHE		
W023-42-666	1				
61-150		DUCT,AIR	CONDUIT		
NA01-61-150A	1	(W/O AIR CON.)			
61-211		HOSE NO.1,WATER	DURITE D'EAU NO 1		
NC10-61-211	1				
61-212		HOSE NO.2,WATER	DURITE D'EAU NO 2		
NC10-61-212	1				
61-239		GROMMET,HEATER PIPE	BAGUE,TUYAU CHAUFF		
D201-61-239	2				
61-539		COVER,AIRCON. SWITCH	COUVERCLE,INTERRUPT. CLIM		
GE4T-61-539B	1	(W/O AIR CON.)			

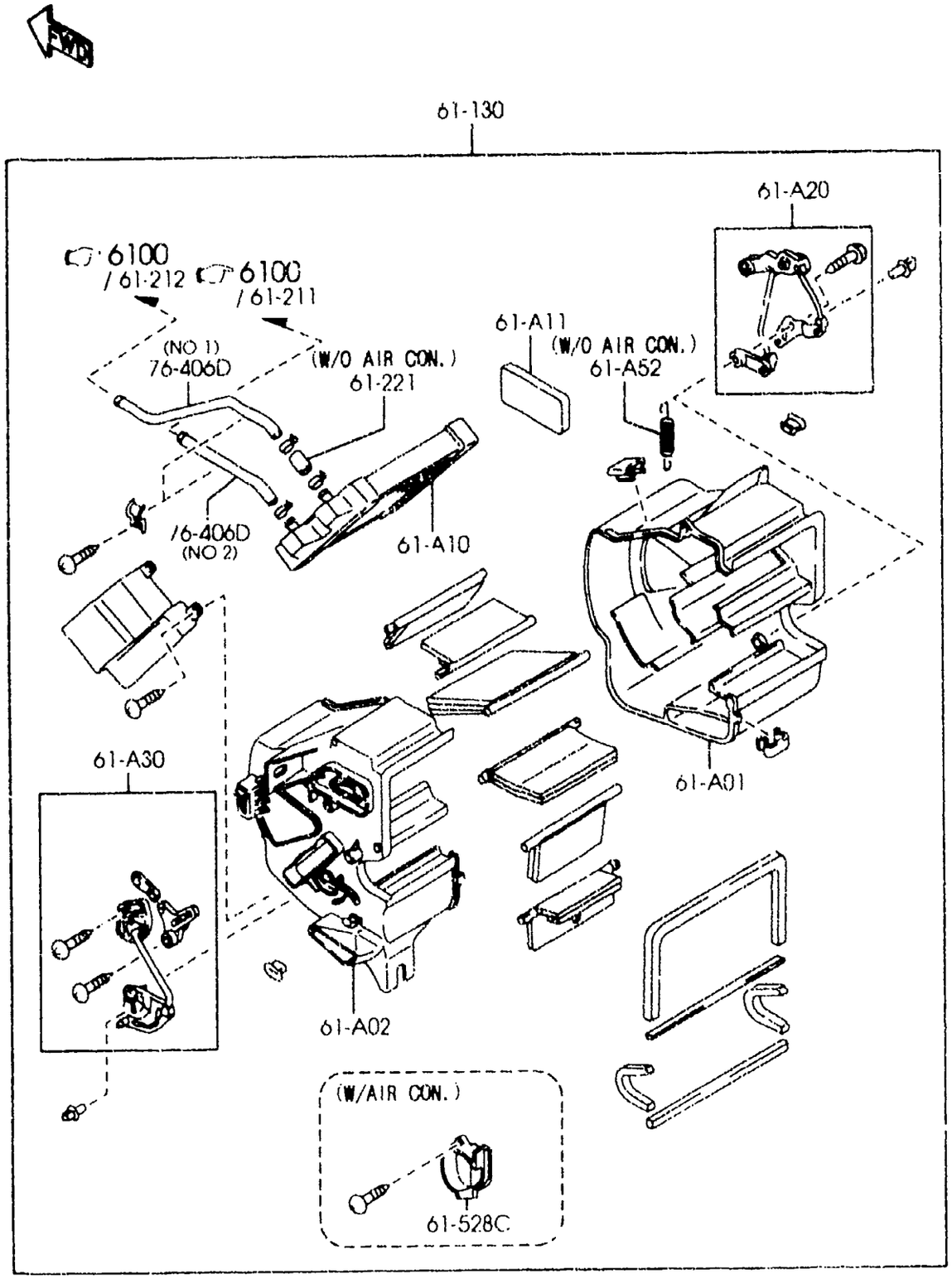

6110A -1 * HEATER UNIT COMPONENTS

PART NO.	QTY	MODEL/RESTRICTION	MODEL/RESTRICTION	MODEL/RESTRICTION	FROM-TO
61-A01		CASE'A',HEATER UNIT	BOITE'A',ENSEMBLE-RE CHAUF		
NC10-61-A01	1				
61-A02		CASE'B',HEATER UNIT	BOITE'B',ENSEMBLE-RE CHAUF		
NC10-61-A02A	1				
61-A10		CORE,HEATER UNIT	NOYAU,RECHAUFFEUR		
NC10-61-A10A	1				
61-A11		LINING,HEATER UNIT	CHEMISE,ENSEMBLE-REC HAUF.		
NC10-61-A11	1				
61-A20		LINK SET,TEMP	JEU LIAISON,TEMP.		
NA01-61-A20	1	(W/AIR CON.)			
NC10-61-A20	1	(W/O AIR CON.)			
61-A30		LINK SET,MODE	JEU LIAISON,MODE		
NA01-61-A30A	1	(W/AIR CON.)			
NC11-61-A30A	1	(W/O AIR CON.)			
61-A52		SPRING,HEATER UNIT	RESSORT,UNITE RECHAU FF.		
NC10-61-A52	1	(W/O AIR CON.)			
61-130		HEATER UNIT	CHAUFFAGE		
NC11-61-130E	1	(W/O AIR CON.)			
NC72-61-130B	1	(W/AIR CON.)			
61-221		HOSE,WATER	DURITE D'EAU		
NA01-61-A21	1	(W/O AIR CON.)			
61-528C		PLATE,SEAL	PLAQUE D'ETANCHEITE		
NC72-61-527A	1	(W/AIR CON.)			
76-406D		PIPE,HEATER UNIT	TUYAU,UNITE DE CHAUF FAGE		
NC10-61-A15	1	(ILLUST. NO.1)			
NC10-61-A16	1	(ILLUST. NO.2)			

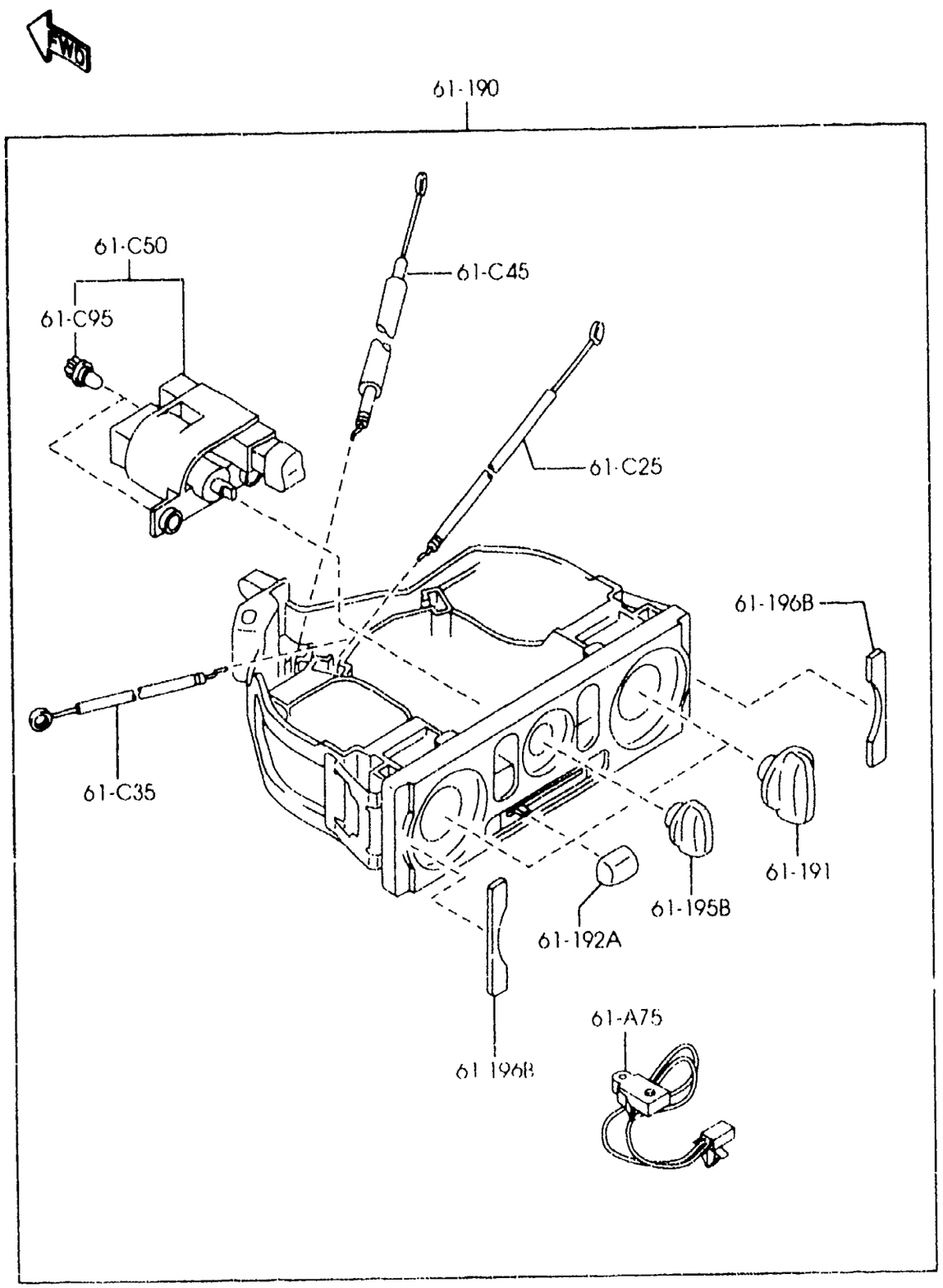

PART NO.	QTY	MODEL/RESTRICTION	MODEL/RESTRICTION	MODEL/RESTRICTION	FROM-TO
61-A75 BJ1A-61-A75	1	SWITCH,MICRO	INTERRUPTEUR MICRO		
61-C25 NC10-61-C25A	1	WIRE,TEMP. CONTROL	CABLE,COMMANDE DE TEMP.		
61-C35 NC10-61-C35	1	WIRE,MODE CONTROL	CABLE,COMMANDE DE MODE		
61-C45 NC10-61-C45B	1	WIRE,RECYCLE & FRESH	CABLE,RECYCLAGE ET FRAIS		
61-C50 NC74-61-C50	1	SWITCH,FAN-HEATER CONTROL	INTERRUPT. CONTROLE VENT.		
61-C95 NC73-61-C95	2	BULB,MODE CONTROL	AMPOULE,COMMANDE DE MODE		
61-190 NC74-61-190B	1	CONTROL,HEATER	COMMANDE DE CHAUFFAGE		
61-191 NC73-61-191	2	KNOB NO.1,MODE CONT.	BOUTON NO 1		
61-192A S38A-61-192	1	KNOB NO.2	BOUTON NO 2		
61-195B NC73-61-195	1	KNOB,FAN SWITCH	BOUTON		
61-196B S38A-61-199	2	COVER,HEATER CONTROL	COUVERCLE,CONTR. REC HAUFF		

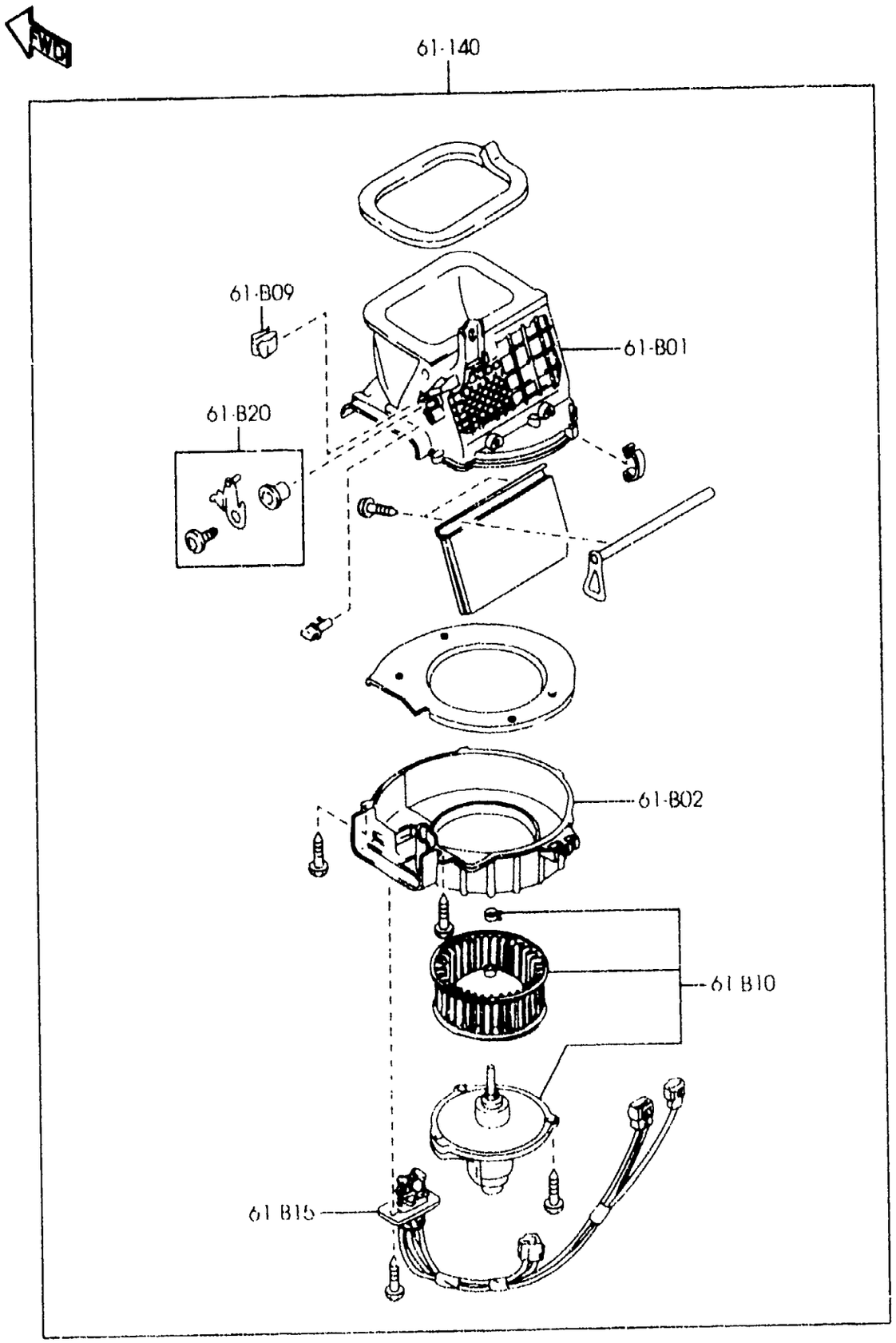

6120A -1 * HEATER BLOWER COMPONENTS

PART NO.	QTY	MODEL/RESTRICTION	MODEL/RESTRICTION	MODEL/RESTRICTION	FROM-TO
61-B01		CASE'A',BLOWER UNIT	BOITE'A',GROUPE SOUF FLANT		
NA75-61-B01	1	(W/O AIR CON.)			
NC72-61-B01	1	(W/AIR CON.)			
61-B02		CASE'B',BLOWER UNIT	BOITE'B',GROUPE SOUF FLANT		
NA01-61-B02	1	(W/O AIR CON.)			
NC72-61-B02	1	(W/AIR CON.)			
61-B09		CLIP,BLOWER UNIT	COLLIER,GROUPE SOUFF LANTE		
NC72-61-B09	1				
61-B10		MOTOR,FAN-BLOWER UNI T	MOTEUR,VENT.-UNITE U ENT.		
WR70-61-B10	1				
61-B15		RESISTOR,BLOWER UNIT	RESISTANCE,UNITE UEN T.		
NA01-61-B15	1				
61-B20		LINK,RECYCLE & FRESH	TETE COULISSANTE,		
NA01-61-B20	1				
61-140		BLOWER UNIT	SOUFFLERIE		
NC11-61-140A	1	(W/O AIR CON.)			
NC72-61-140	1	(W/AIR CON.)			

(PIPE & CONDENSER)

61-390
(CONDITIONER, AIR)

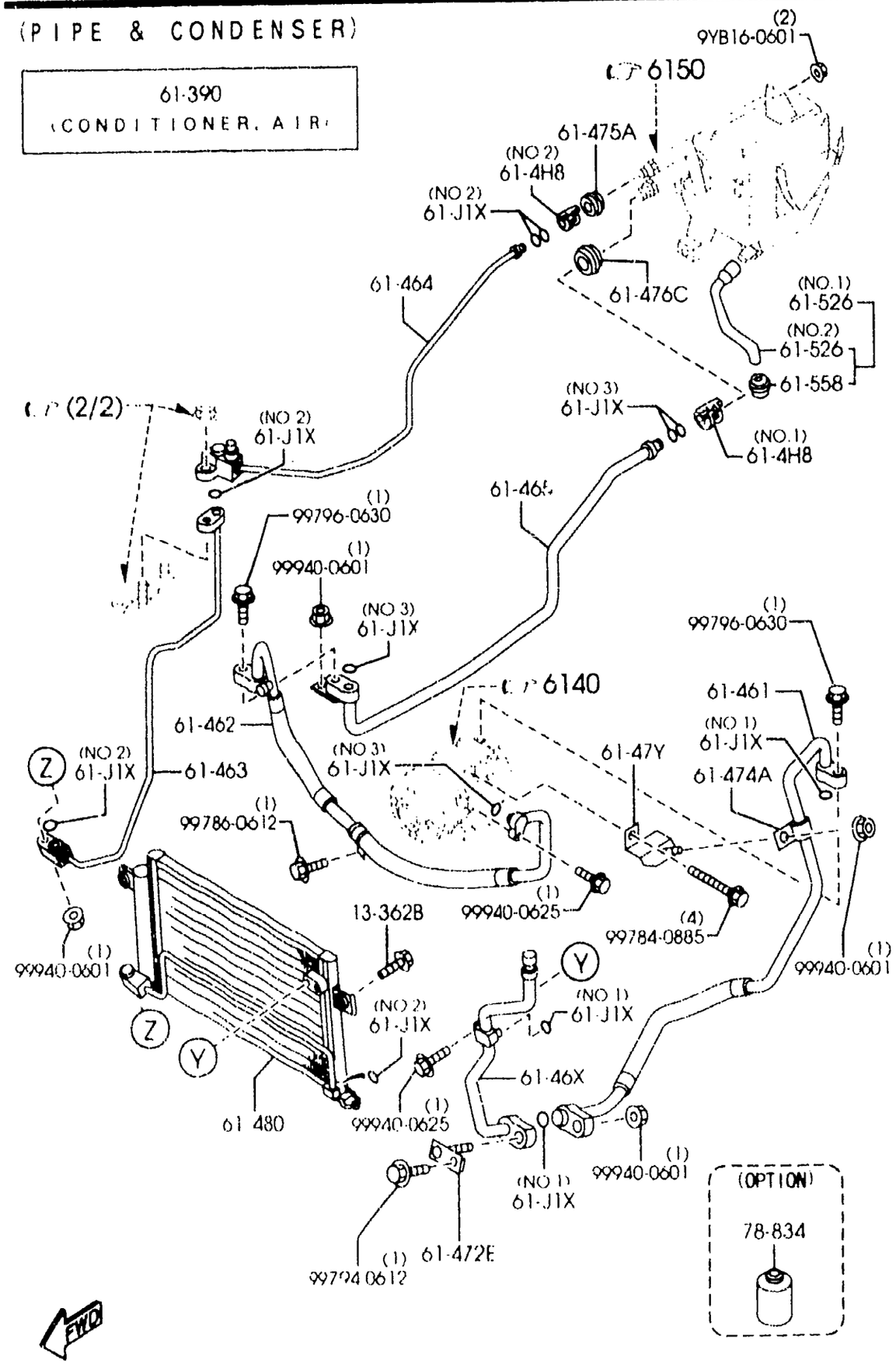

AUNA08

(BRACKET & CLIP)

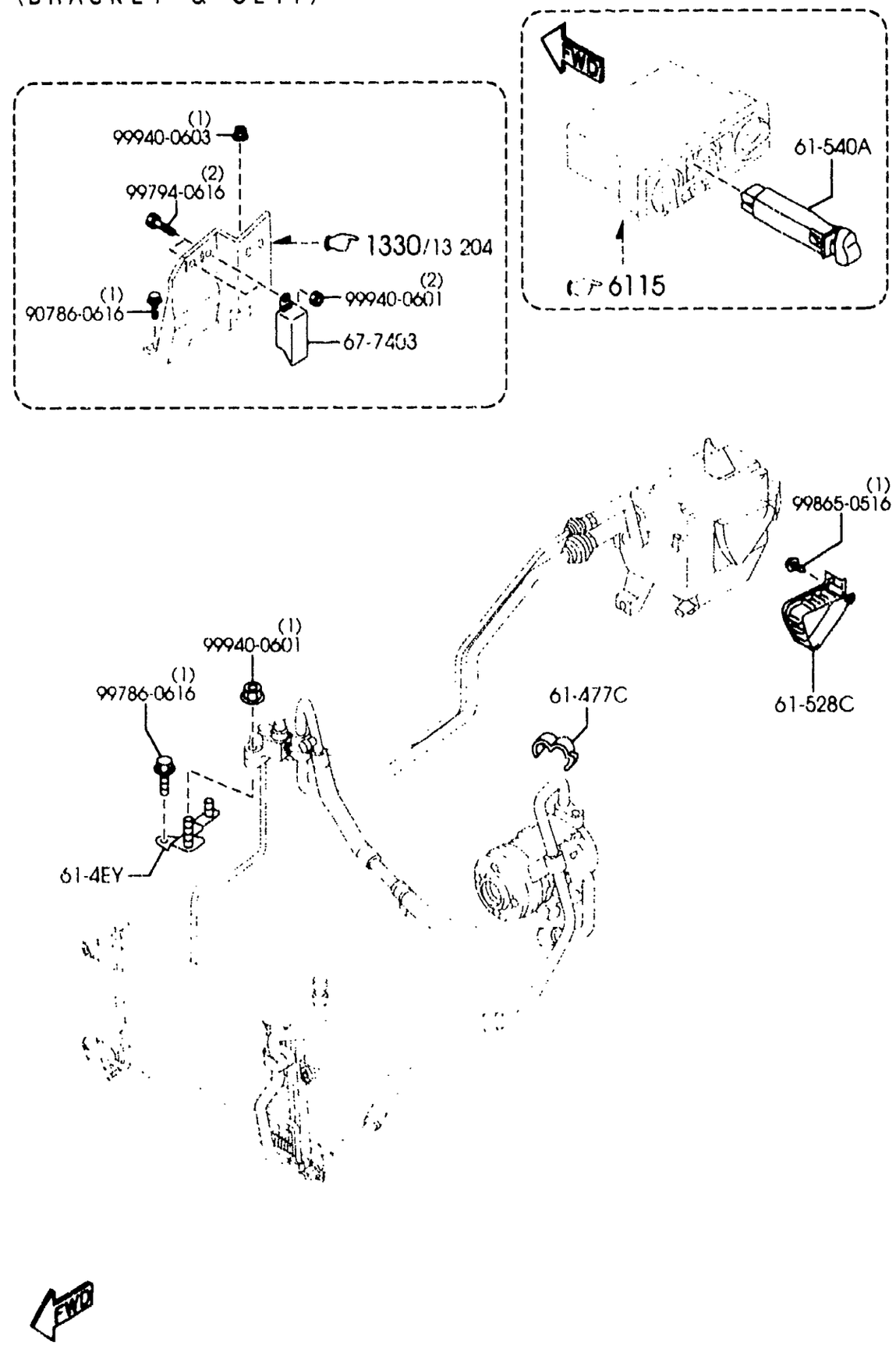

AUNA08

(PIPE & CONDENSER)

61-390
(CONDITIONER, AIR)

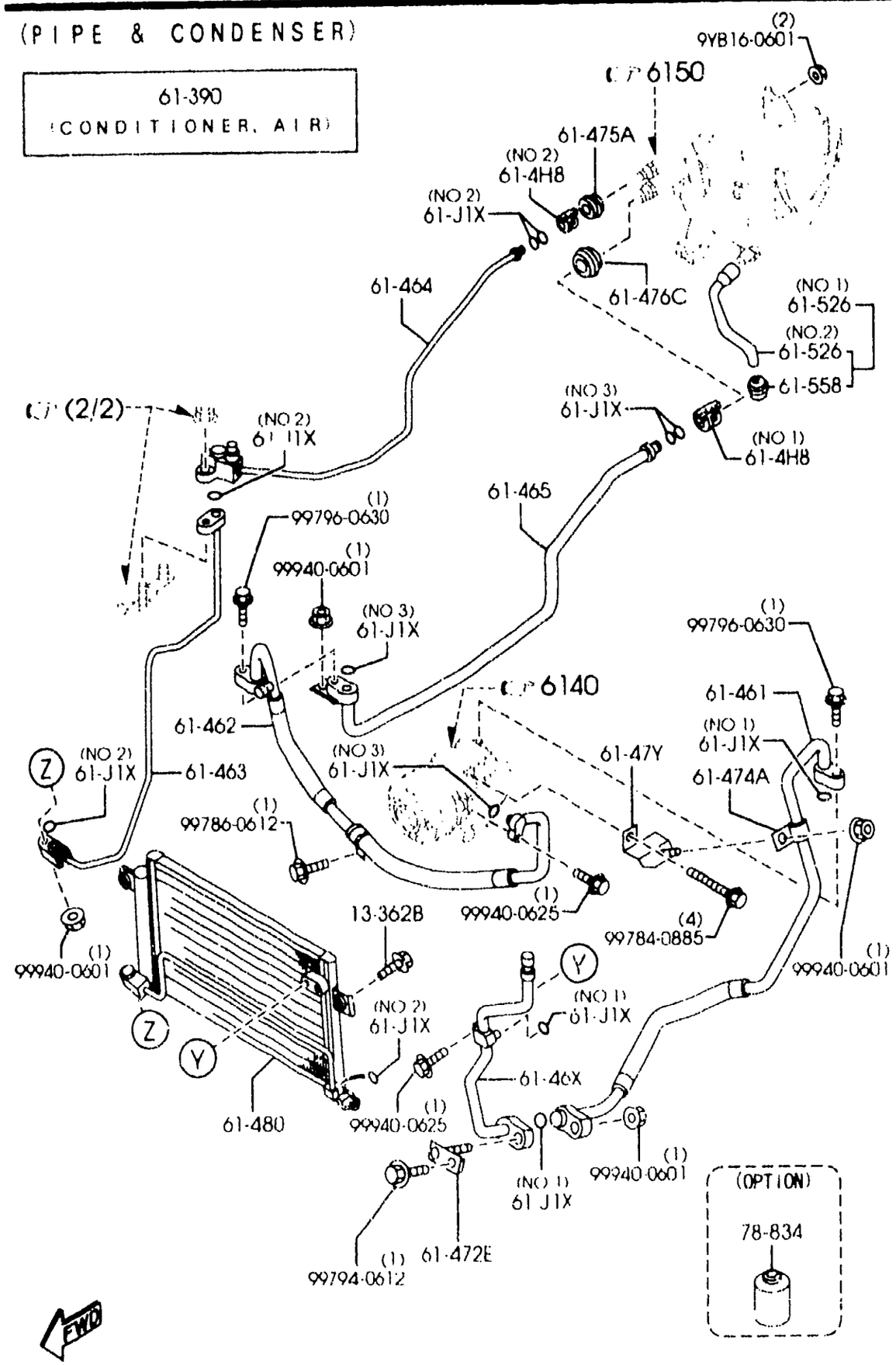

PART NO.	QTY	MODEL/RESTRICTION	MODEL/RESTRICTION	MODEL/RESTRICTION	FROM-TO
13-362B		BOLT	BOULON		
R205-13-362	2				
61-J1X		RING,'O'-NO.1	JEU BAGUE'O',NO.1		
W257-61-J17	3	(ILLUST. NO.1)			
W326-61-J17	5	(ILLUST. NO.2)			
W329-61-J17	4	(ILLUST. NO.3)			
61-390		CONDITIONER,AIR	CONDITIONNEMENT AIR		
NC73-61-410J	1	(OPTION)			-0A20
AN(NC73-61-410K)					
NC73-61-410K	1	(OPTION)			0A20-1201
AN(NC73-61-410L)					
NC73-61-410L	1	(OPTION)			1201-1801
AN(NC73-61-410M)					
*NC73-61-410M	1	(OPTION)			1801-
61-4EY		BRACKET	ATTACHE		
NC72-61-4EXA	1				
61-4H8		CLIP	ETRIER		
NC72-61-4H5	1	(ILLUST. NO.1)			
NC73-61-4H5	1	(ILLUST. NO.2)			
61-46X		PIPE,COOLER-HIGH	TUYAU,REFRIGERANT-HAUT		
NC72-61-46XA	1				
61-461		HOSE,FLEXIBLE-HIGH	TUYAU FLEXIBLE SUP.		
NC72-61-461C	1				
61-462		HOSE,FLEXIBLE-LOW	TUYAU FLEXIBLE INF.		
NC72-61-4T0B	1				-1201
NC72-61-4T0C	1				1201-1801
AN(NC72-61-4T0D)					
*NC72-61-4T0D	1				1801-
61-463		PIPE NO.1,COOLER	CONDUIT NO 1		
NC72-61-464A	1				
61-464		PIPE NO.2,COOLER	CONDUIT NO 2		
NC72-61-465A	1				

0A20 NB35**-205725
1201 NB35**-210890
1801 NB35**-220738

(BRACKET & CLIP)

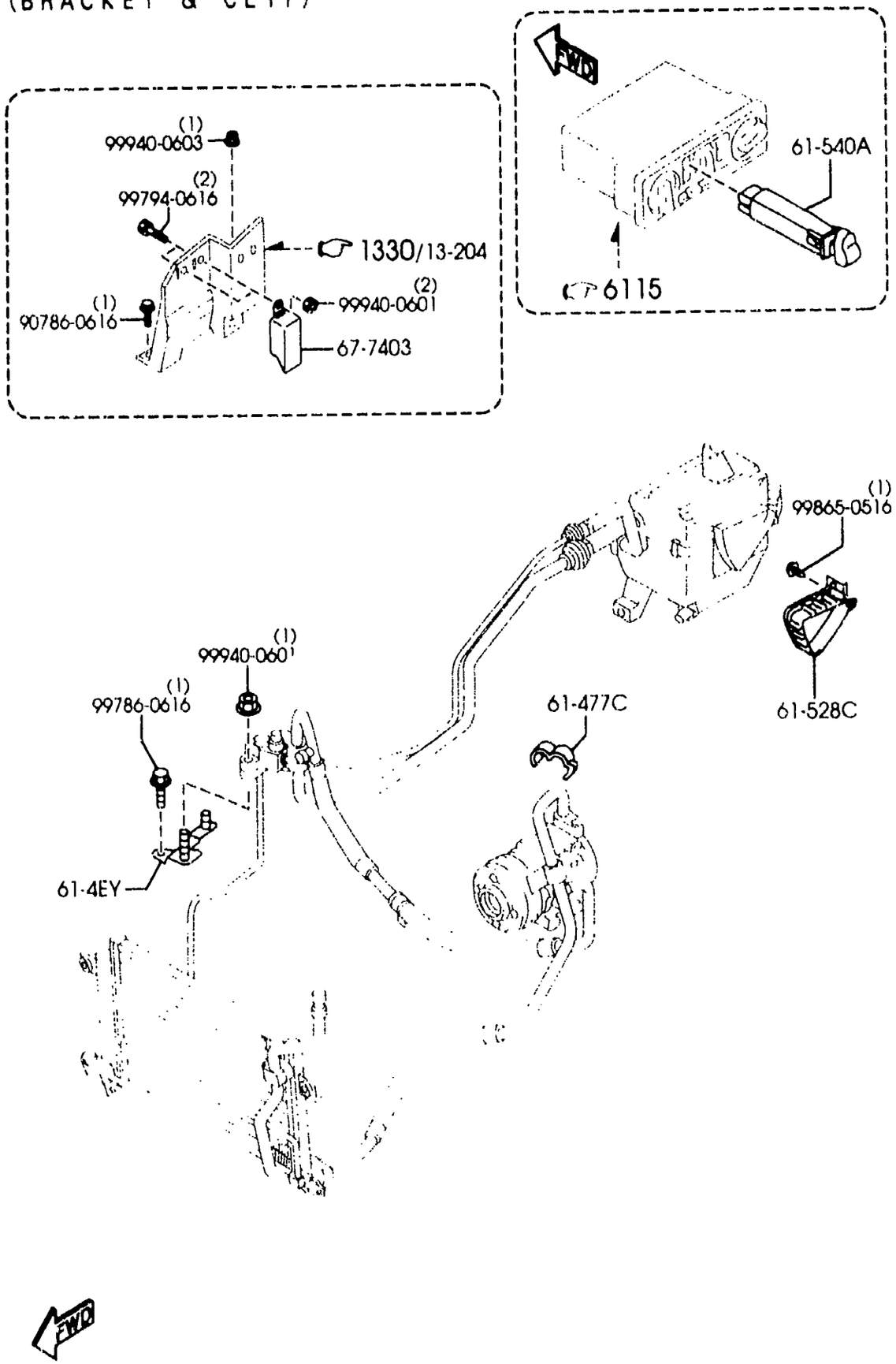

PART NO.	QTY	MODEL/RESTRICTION	MODEL/RESTRICTION	MODEL/RESTRICTION	FROM-TO
61-465		PIPE NO.3,COOLER	CONDUIT NO 3		
NC72-61-46ZA	1				-1201
NC72-61-46ZB AN(NC72-61-46ZC)	1				1201-1801
*NC72-61-46ZC	1				1801-
61-47Y		BRACKET,HOSE	SUPPORT,TUYAU		
NC72-61-47Y	1				
61-472E		BRACKET,CLAMP	SUPPORT		
N054-61-472	1				
61-474A		CLIP	ATTACHE		
NC72-61-474	1				
61-475A		GROMMET	AMORTISSEUR		
B092-61-475	1				
61-476C		GROMMET	BAGUE		
B092-61-476A	1				
61-477C		CLIP	ATTACHE		
B02A-61-477	1				
61-480		CONDENSER	CONDENSATEUR		
NC72-61-480A	1				
61-526		HOSE,DRAIN	DURITE D'ECOULEMENT		
NC72-61-527	1	(ILLUST. NO.1)			
NC72-61-526	1	(ILLUST. NO.2)			
61-528C		PLATE,SEAL	PLAQUE D'ETANCHEITE		
NC72-61-527A	1	(OPTION)			
61-540A		SWITCH,AIR CON.	INTERR.,CLIMATISEUR		
GE4T-61-530B	1				
61-558		GROMMET,UNIT-COOLING	BAGUE,ENSEMBLE-REFRO IDISS		
LB46-61-558A	1				

1201 NB35**-210890
1801 NB35**-220738

(PIPE & CONDENSER)

61-390
(CONDITIONER, AIR)

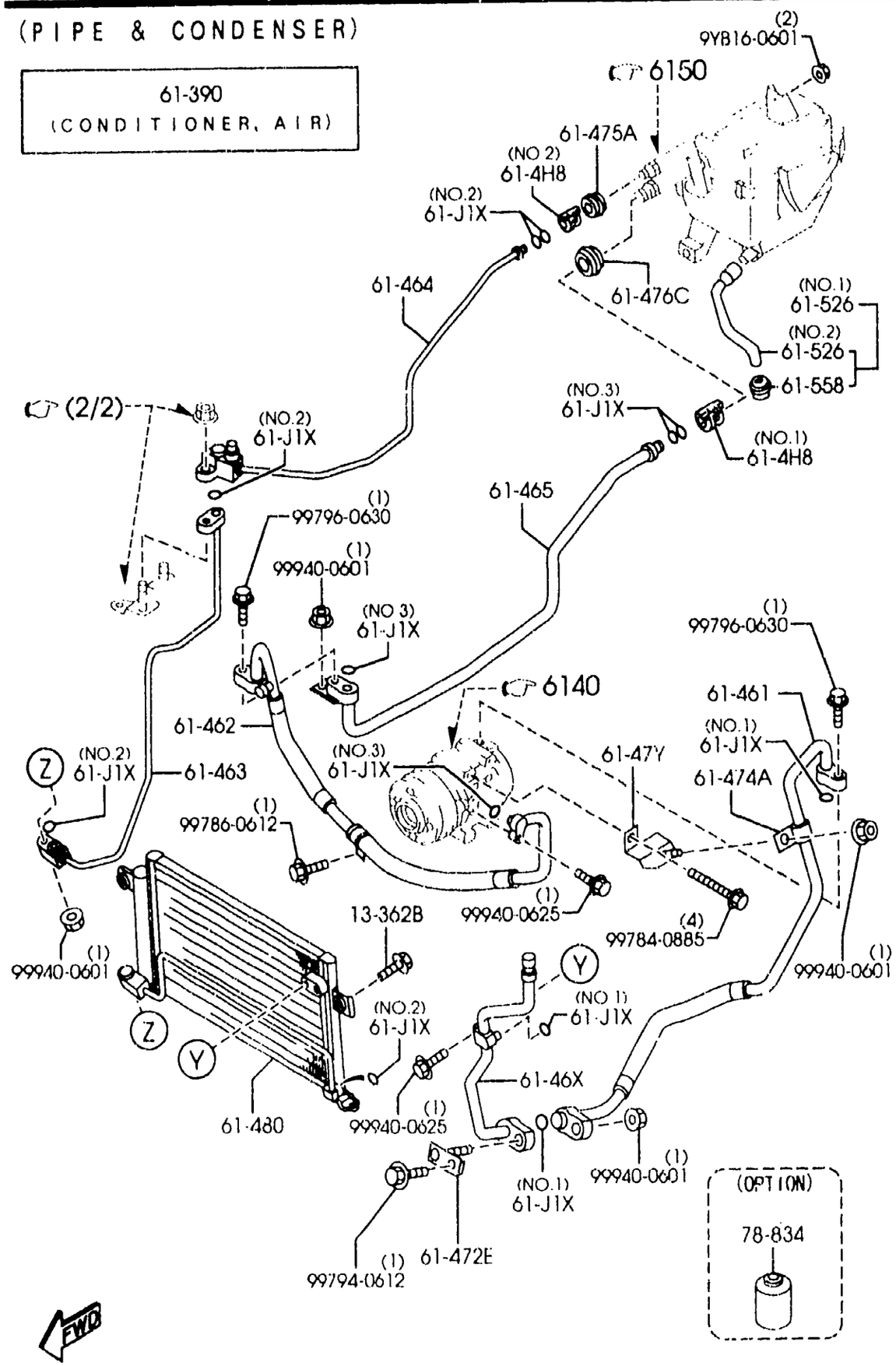

AUNA08

6130A -3 * AIR CONDITIONER

PART NO.	QTY	MODEL/RESTRICTION	MODEL/RESTRICTION	MODEL/RESTRICTION	FROM-TO
47-7403		RELAY,N.O.	RELAIS,N.O.		
H310-67-740	2	30A (OPTION)	30A		
78-834		REFRIGERANT DRUM	REFRIGERANT TAMBOUR		
W257-61-R13	2	200G (OPTION)	200G		

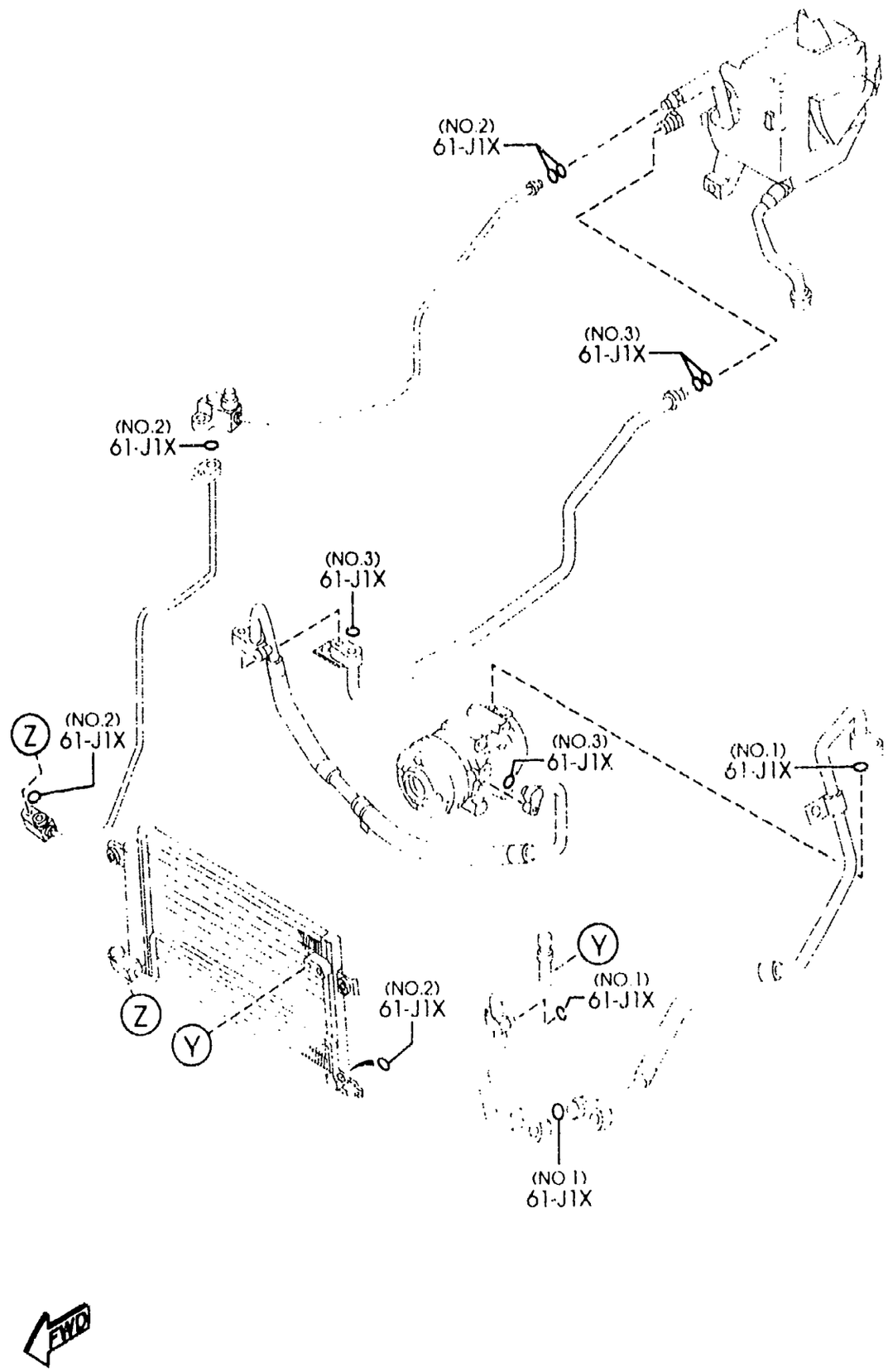

6135A -1 * AIR CONDITIONING COOLING PIPE O-RING

PART NO.	QTY	MODEL/RESTRICTION	MODEL/RESTRICTION	MODEL/RESTRICTION	FROM-TO
61-J1X		RING,'O'-NO.1	JEU BAGUE'O',NO.1		
W257-61-J17	3	(ILLUST. NO.1)			
W326-61-J17	5	(ILLUST. NO.2)			
W329-61-J17	4	(ILLUST. NO.3)			

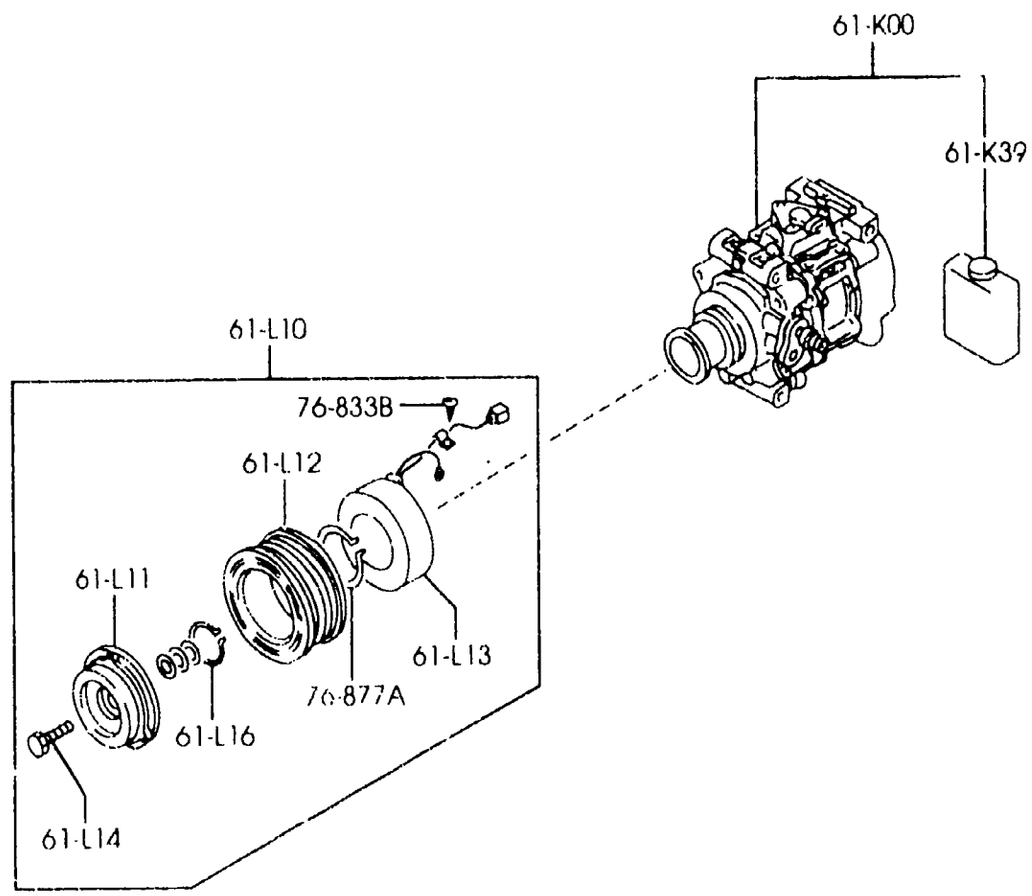

PART NO.	QTY	MODEL/RESTRICTION	MODEL/RESTRICTION	MODEL/RESTRICTION	FROM-TO
61-K00 NC72-61-K00	1	COMPRESSOR,AIR CON.	COMPRESSEUR,COND. AIR		
61-K39 FD15-61-K39	1	OIL,COMPRESSOR	HUILE,COMPRESSEUR		
61-L10 N026-61-L10	1	CLUTCH,MAGNET	EMBRAYAGE,MAGNETIQUE		
61-L11 FD15-61-L11	1	ARMATURE,MAGNETIC CLUTCH	ARMATURE,EMBRAY. MAGNET.		
61-L12 N026-61-L12	1	PULLEY,MAGNET CLUTCH	POULIE,EMBRAY. MAGNET.		
61-L13 FD15-61-L13	1	COIL,FIELD-MAGNET CLUTCH	BOBINE,CHAMP-EMB. MAGNET.		
61-L14 F065-61-L14	1	BOLT,MAGNET CLUTCH	BOULON,EMBRAYAGE MAGNET		
61-L16 F065-61-L16	1	RING,SNAP-MAGNET CLUTCH	BAGUE,RESSORT-EMBR. MAG.		
76-833B B001-76-734	1	WASHER	RONDELLE		
76-877A B001-76-725	1	RING,SNAP	CALE		

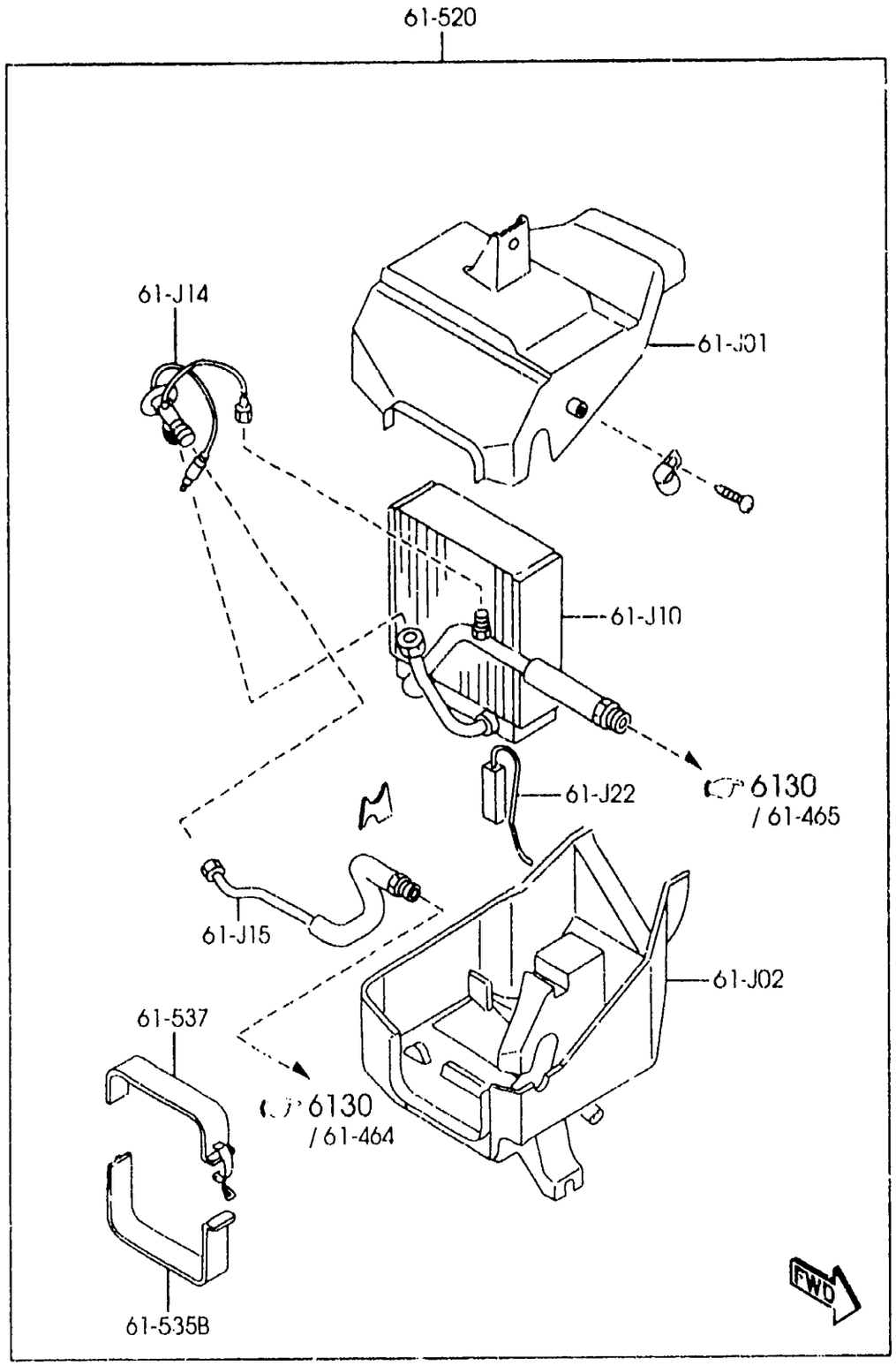

6150A -1 * AIR CONDITIONING COOLING UNIT

PART NO.	QTY	MODEL/RESTRICTION	MODEL/RESTRICTION	MODEL/RESTRICTION	FROM-TO
61-J01		CASE'A',COOLING UNIT	BOITE'A',BLOC REFROI DISS.		
NC72-61-J01	1				
61-J02		CASE'B',COOLING UNIT	BOITE'B',BLOC REFROI DISS.		
NC72-61-J02	1				
61-J10		EVAPORATOR	EVAPORATEUR		
NC72-61-J10	1				
61-J14		VALVE,EXPANSION	ROBINET DETENDEUR		
N053-61-J14A	1				
61-J15		PIPE,COOLING UNIT	TUBE,UNITE REFROID.		
N053-61-J15	1				
61-J22		SENSOR,VALVE	CAPTEUR,SOUPAPE		
N053-61-J22A	1				
61-520		UNIT,COOLING	CLIMATISEUR		
NC72-61-520C	1				-0A20
AN(NC72-61-520D)					
NC72-61-520D	1				0A20-1201
NC72-61-520E	1				1201-
61-535B		PLATE NO.1,SEAL	PLAQUE D'ETANCHEITE NO 1		
N001-61-52YA	1				-0A20
AN(N001-61-52YB)					
N001-61-52YB	1				0A20-
61-537		PLATE NO.3,SEAL	PLAQUE D'ETANCHEITE NO 3		
N001-61-529A	1				

0A20 NB35**-205725
1201 NB35**-210890

6300A WINDOW GLASSES

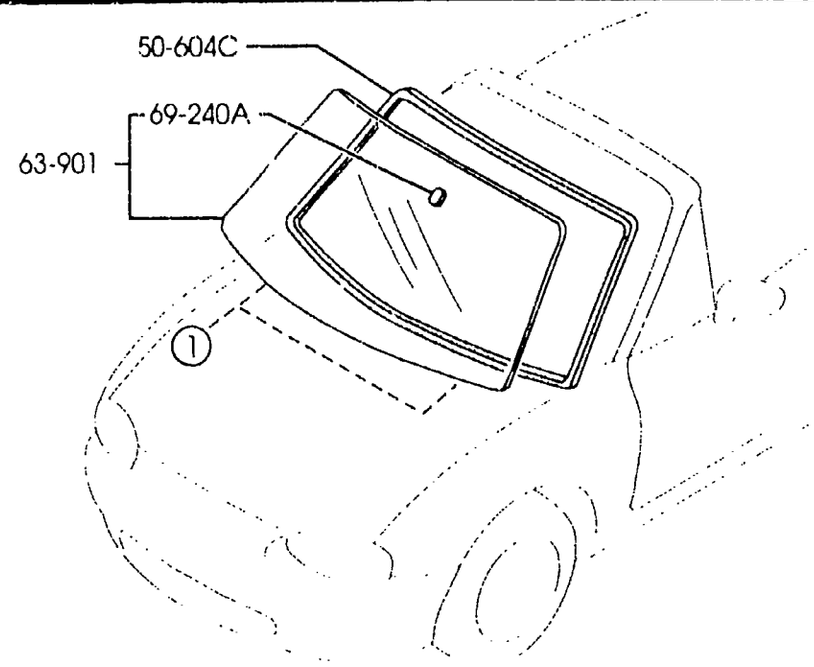

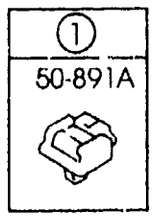

(W/DETACHABLE HARD TOP)

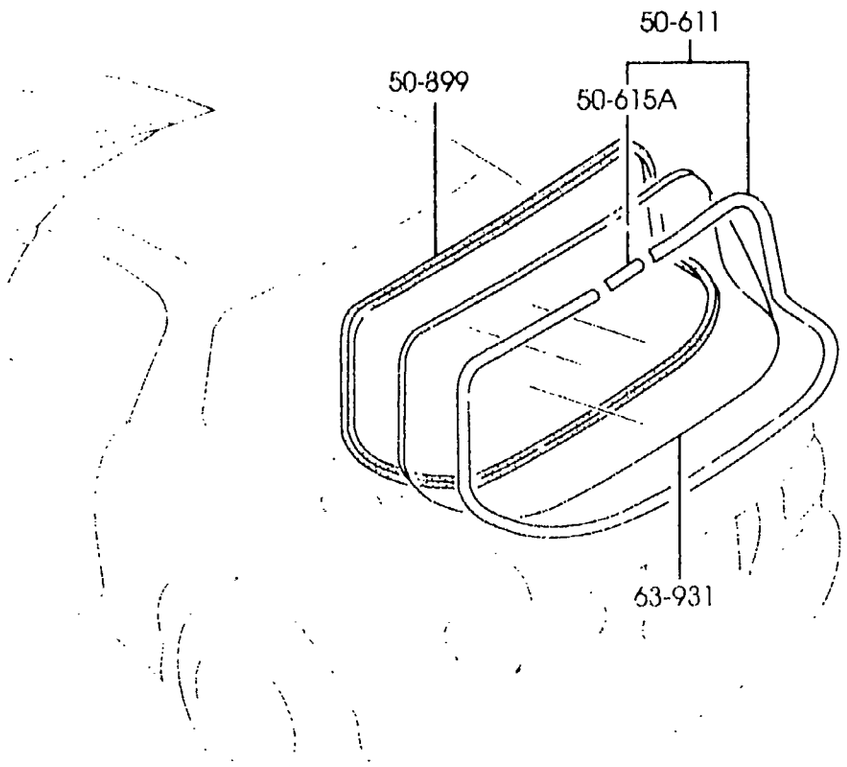

PART NO.	QTY	MODEL/RESTRICTION	MODEL/RESTRICTION	MODEL/RESTRICTION	FROM-TO
50-604C		DAM	JOINT		
NA01-50-894A	1	L=3550MM	L=3550MM		
GA7B-50-899	1	L=3960MM	L=3960MM		
50-611		MOULD,RR.WINDOW	MOULURE FENETRE ARR.		
NAY1-63-930	1	(W/DETACHABLE HARD TOP)			
50-615A		JOINT,BACK WINDOW MOULD	RACCORD,		
NA01-63-934	1	(W/DETACHABLE HARD TOP)			
50-891A		SPACER,WINDOW	ENTRETOISE,FENETRE		
E040-50-891	2	WHITE	WHITE		
50-899		DAM,REAR-WIND.	BARRAGE,AR.-PARE BRISE		
NA01-63-895	1	(W/DETACHABLE HARD TOP)			
63-901		GLASS,WINDSHIELD	PAREBRISE		
NC11-63-900	1				
63-931		GLASS,BACK WINDOW	GLACE DE LUNETTE AR.		
NB40-63-931	1	(W/DETACHABLE HARD TOP)			
69-240A		BASE,INTERIOR MIRROR	SOCLE MIRROIR		
BC1C-69-240	1				

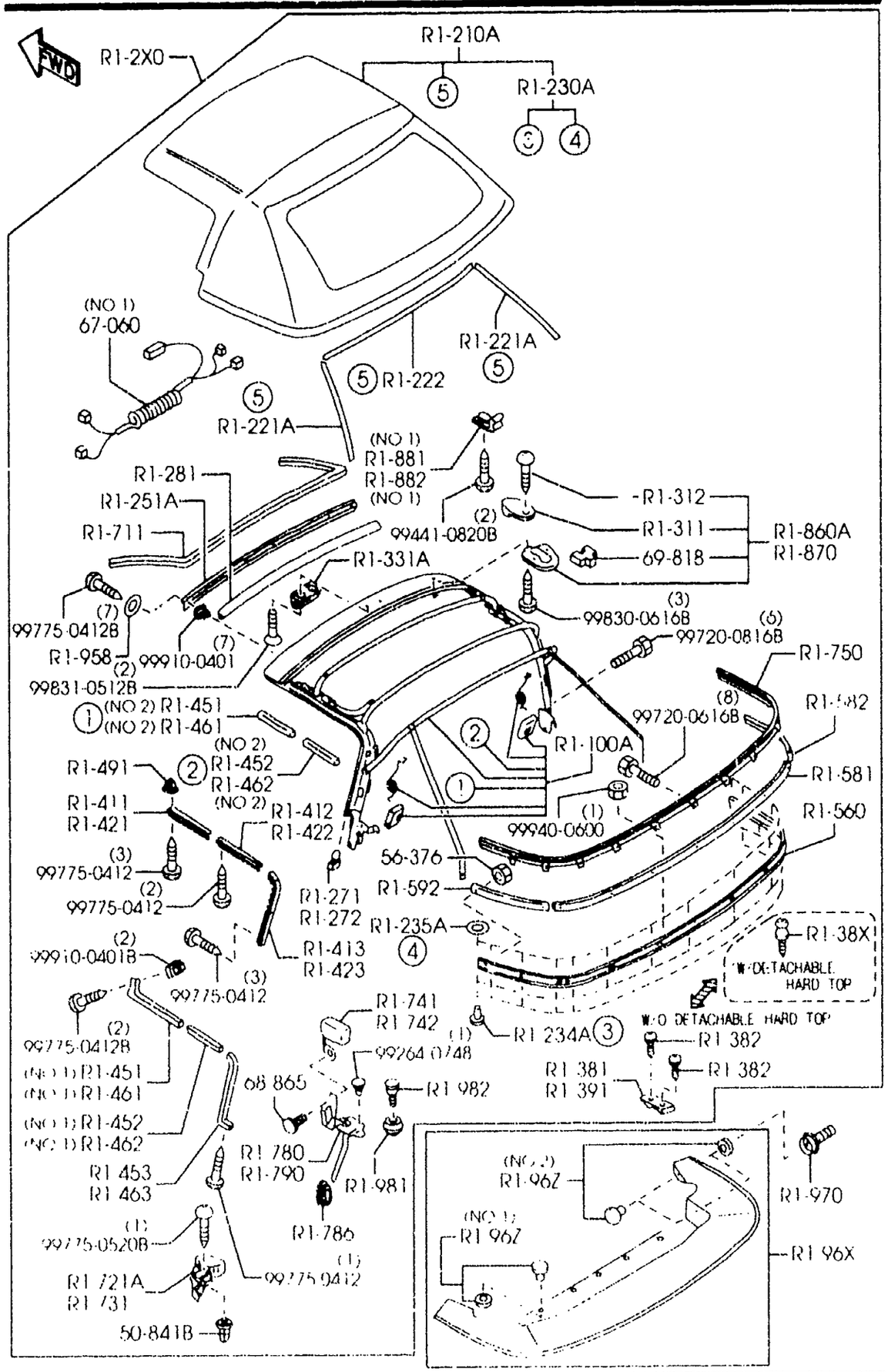

(W/DETACHABLE HARD TOP)

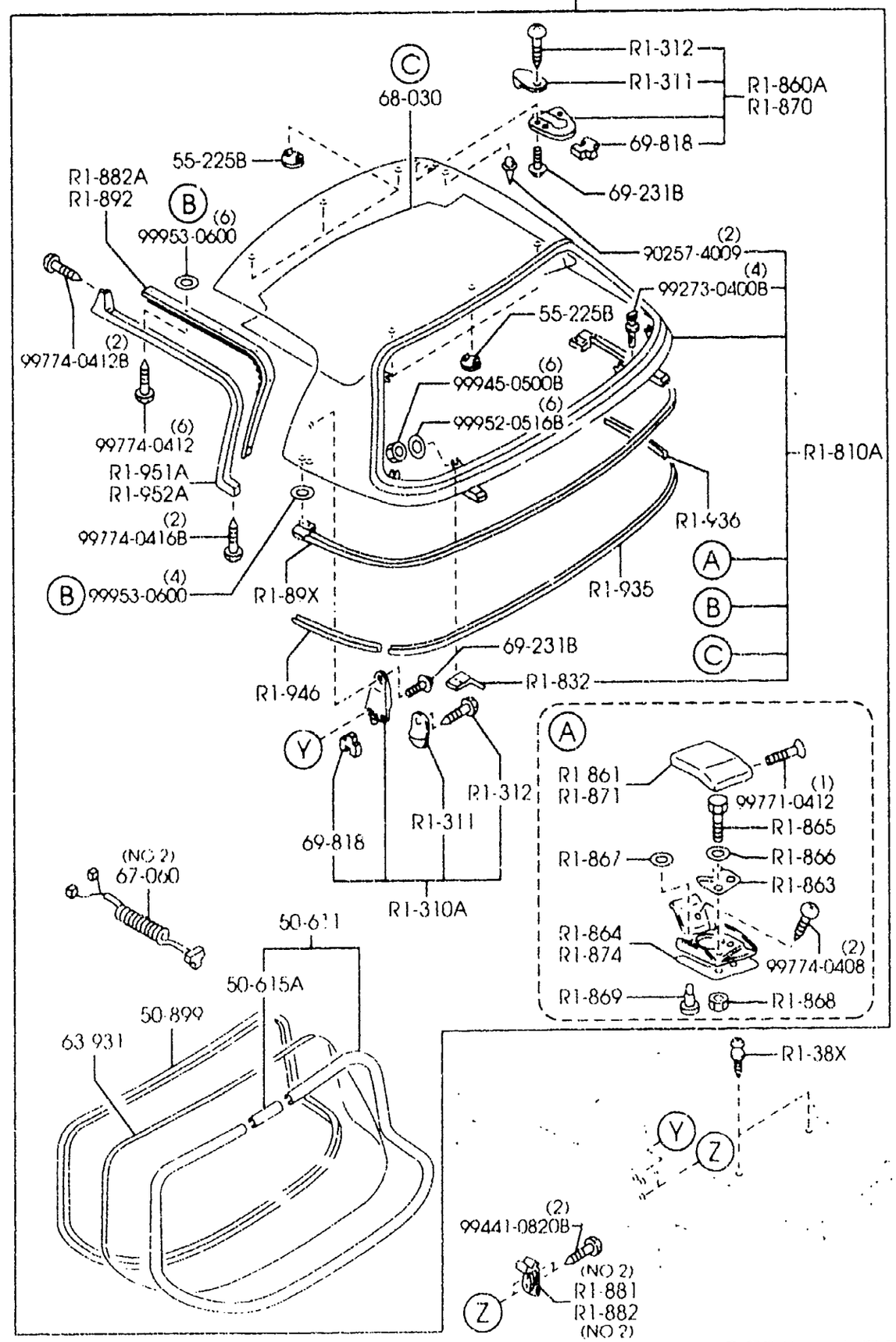

6330A SUN ROOF

(1/2)

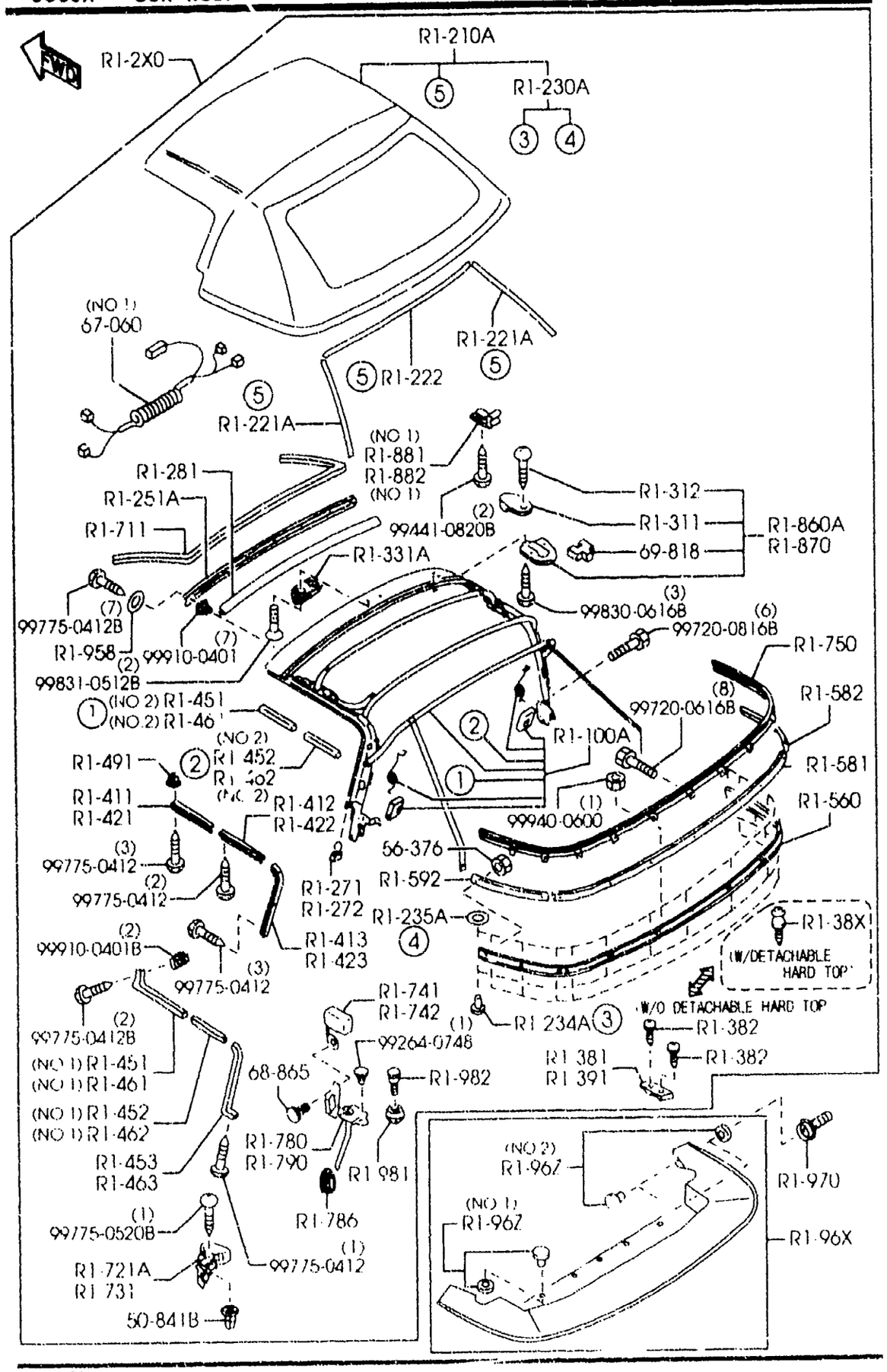

PART NO.	QTY	MODEL/RESTRICTION	MODEL/RESTRICTION	MODEL/RESTRICTION	FROM-TO
R1-100A		LINK,SOFT TOP	TRINGLE,TOIT TOILE		
NC10-R1-100D	1				
R1-2X0		TOP,SOFT	TOIT,TENDRE		
NC20-R1-020G	1	(VINYL-'A TYPE')			-1122
66	INT-	NB3 BLACK	NB3 NOIR		
88	INT-	NB4 TAN	NB4 TAN		
NC72-R1-020A	1	(VINYL-'B TYPE')			-1122
88	INT-	NB4 TAN	NB4 TAN		
NC20-R1-020J	1	(VINYL-'A TYPE')			1122-1601
66	INT-	NB3 NB5 NB8 BLACK	NB3 NB5 NB8 NOIR		
88	INT-	NB4 TAN	NB4 TAN		
NC72-R1-020B	1	(VINYL-'B TYPE')			1122-1601
88	INT-	NB4 TAN	NB4 TAN		
NC20-R1-020K	1	(VINYL-'A TYPE')			1601-1703
66	INT-	NB3 NB5 NB8 NB9 BLACK	NB3 NB5 NB8 NB9 NOIR		
88	INT-	NB4 TAN	NB4 TAN		
NC72-R1-020C	1	(VINYL-'B TYPE')			1601-1703
88	INT-	NB4 TAN	NB4 TAN		
NC20-R1-020L	1	(VINYL-'A TYPE')			1703-1716
66	INT-	NB3 NB5 NB8 NB9 BLACK	NB3 NB5 NB8 NB9 NOIR		
88	INT-	NB4 TAN	NB4 TAN		
NC72-R1-020D	1	(VINYL-'B TYPE')			1703-1716
88	INT-	NB4 TAN	NB4 TAN		
NC20-R1-020M	1	(VINYL-'A TYPE')			1716-
66	INT-	NB3 NB5 NB8 BLACK	NB3 NB5 NB8 NOIR		
88	INT-	NB4 TAN	NB4 TAN		
NC72-R1-020E	1	(VINYL-'B TYPE')			1716-
88	INT-	NB4	NB4		
R1-210A		FABRIC,TOP-SOFT TOP	CAPUCHON,HAUT MOU		
NC10-R1-210E	1	(VINYL-'A TYPE')			-1122
66	INT-	NB3 BLACK	NB3 NOIR		
88	INT-	NB4 TAN	NB4 TAN		

1122 NB35**-209882
1601 NB35**-219011
1716 NB35**-220116

(W/DETACHABLE HARD TOP)

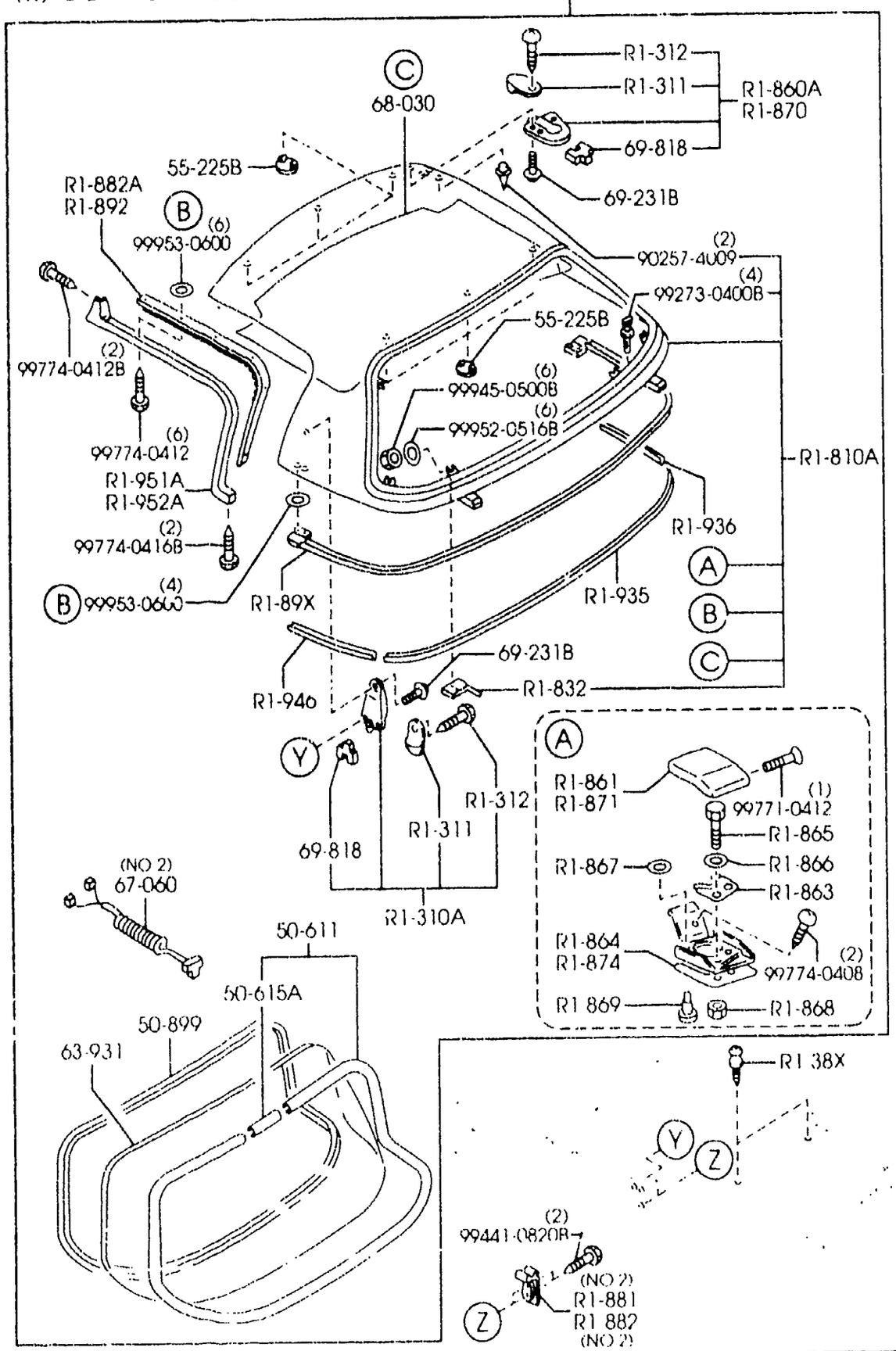

PART NO.	QTY	MODEL/RESTRICTION	MODEL/RESTRICTION	MODEL/RESTRICTION	FROM-TO
CONT'D					
NC72-R1-210A	1	(VINYL-'B TYPE')			-1601
88	INT-	NB4 TAN	NB4 TAN		
NC10-R1-210F	1	(VINYL-'A TYPE')			1122-1601
66	INT-	NB3 NB5 NB8 BLACK	NB3 NB5 NB8 NOIR		
88	INT-	NB4 TAN	NB4 TAN		
NC10-R1-210G	1	(VINYL-'A TYPE')			1601-
66	INT-	NB3 NB5 NB8 BLACK	NB3 NB5 NB8 NOIR		
88	INT-	NB4 TAN	NB4 TAN		
NC72-R1-210B	1	(VINYL-'B TYPE')			1601-
88	INT-	NB4 TAN	NB4 TAN		
R1-221A		PAD,SOFT TOP	TAMPON,TETE DOUX		
NC10-R1-221 A (NC10-R1-221A)	2				-1108
NC10-R1-221A	2				1108-
R1-222		PAD,SOFT TOP	TAMDON,TETE DOUX		
NC10-R1-222 A (NC10-R1-222A)	1				-1108
NC10-R1-222A	1				1108-
R1-230A		FASTENER SET,TOP CLOTH	JEU FERMET.,COUV. TETE		
NA01-R1-23C	1				
R1-234A		FASTENER,RAIN RAIL-REAR	AGRAFE,RAIL PLUIE LATERAL		
NA01-R1-234 AN(NA01-R1-234A)	13				-1601
NA01-R1-234A	13				1601-
R1-235A		WASHER,FASTENER-RAIN RAIL	RONDELLE,AGRAFE-RAIL PLUI		
NA01-R1-235	13				
R1-251A		PLATE(FRT),SET-ROOF PANEL	PLAQUE(AV),JEU-PANN. TOIT		
NA01-R1-291A	1				
R1-271		CLIP(R),FORM PLATE	ETRIER(D),PLAQUE FORME		
NA01-R1-271	1				
R1-272		CLIP(L),FORM PLATE	ETRIER(G),PLAQUE FORME		
NA01-R1-272	1				

1108 NB35**-208709
1122 NB35**-209882
1601 NB35**-219011

6330A SUN ROOF

(1/2)

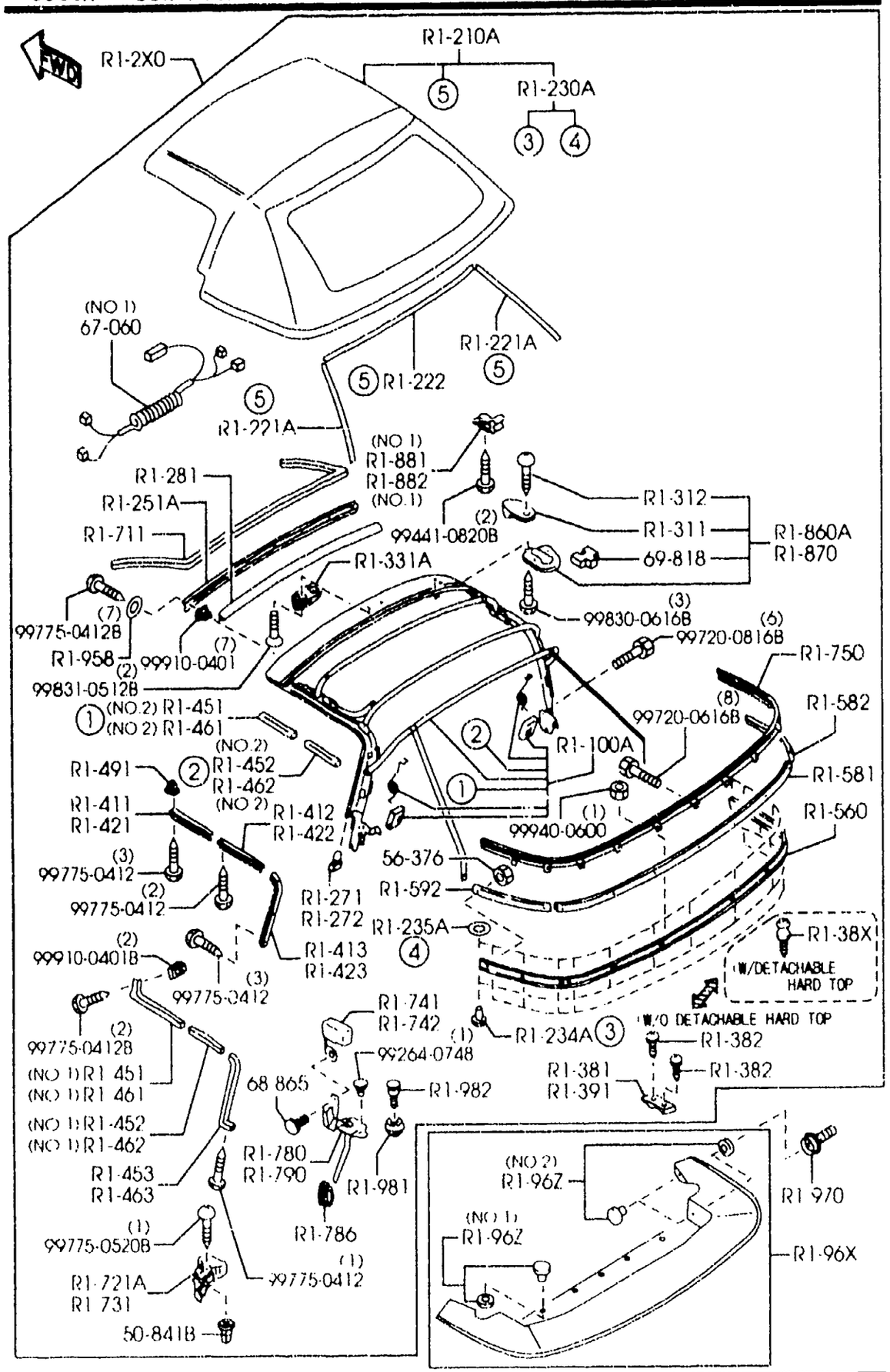

PART NO.	QTY	MODEL/RESTRICTION	MODEL/RESTRICTION	MODEL/RESTRICTION	FROM-TO
R1-281 NC10-R1-281	1	WELT,SEAMING-SOFT TOP	BOMBEMENT,COUTURE-T. TOILE		
R1-310A NA02-R1-310G	2	LOCK,DETACHABLE TOP (W/DETACHABLE HARD TOP)	VERROU,CAPOTE AMOVIBLE		
R1-311 NA01-R1-311	2	CAP,TOP LOCK (W/O DETACHABLE HARD TOP)	CAPOT,VERROU.TETE		
NA01-R1-311	4	(W/DETACHABLE HARD TOP)			
R1-312 NA01-R1-312	2	SCREW,TOP LOCK (W/O DETACHABLE HARD TOP)	VIS,VERROU TETE		
NA01-R1-312	4	(W/DETACHABLE HARD TOP)			
R1-331A NA01-R1-331	1	HANDLE,SOFT TOP	LEVIER,TOIT TOILE		
R1-38X NA01-R1-38XB	2	HOOK,SOFT TOP-REAR DECK (W/DETACHABLE HARD TOP)	CROCHET,TOIT TOILE-COU AR		
R1-381 NA01-R1-381E	1	PLATE(R),HOOK-REAR DECK	PLAQUE(D),CROCHET-COUV AR		
R1-382 NA01-R1-382C	2	SCREW,HOOK-REAR DECK (W/DETACHABLE HARD TOP)	VIS,CROCHET.COUVERTURE AR		
NA01-R1-382C	4	(W/O DETACHABLE HARD TOP)			
R1-391 NA01-R1-391E	1	PLATE(L),HOOK-REAR DECK	PLAQUE(G),CROCHET-COUV.AR		
R1-411 NA01-R1-461	1	RETAINER'A'(R),WTHSTP	ARRET'A'(D),JOINT VITRE		
R1-412 NA01-R1-462	1	RETAINER'B'(R),WTHSTP	ARRET'B'(D),JOINT VITRE		

6330A SUN ROOF

(2/2)

(W/DETACHABLE HARD TOP)

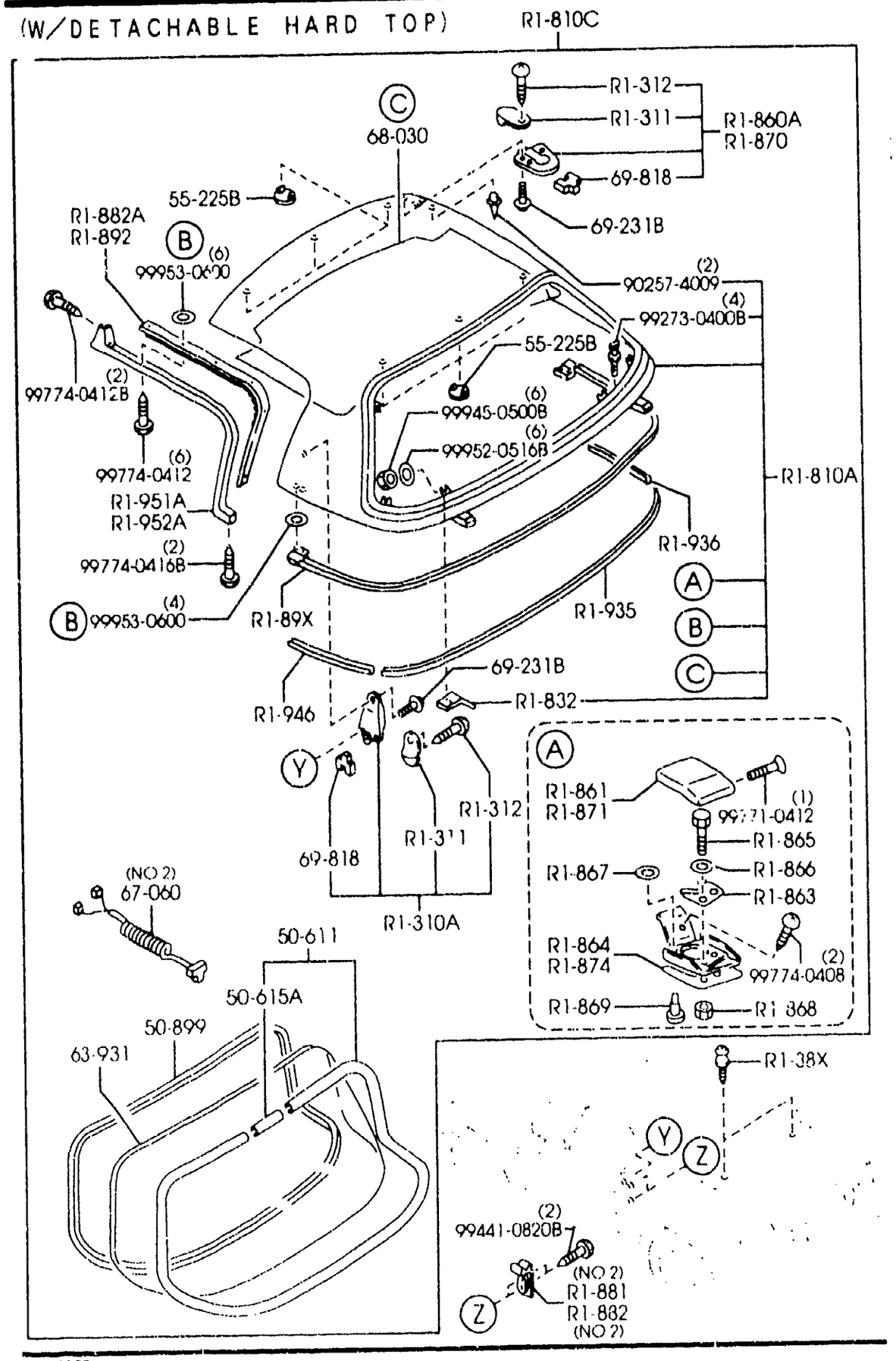

PART NO.	QTY	MODEL/RESTRICTION	MODEL/RESTRICTION	MODEL/RESTRICTION	FROM-TO
R1-413		RETAINER'C'(R),WTHSTP	ARRET'C'(D),JOINT VITRE		
NA01-R1-463	1				
R1-421		RETAINER'A'(L),WTHSTP	ARRET'A'(G),JOINT VITRE		
NA01-R1-471	1				
R1-422		RETAINER'B'(L),WTHSTP	ARRET'B'(G),JOINT VITRE		
NA01-R1-472	1				
R1-423		RETAINER'C'(L),WTHSTP	ARRET'C'(G),JOINT VITRE.		
NA01-R1-473	1				
R1-451		WTHSTP NO.1(R),LINK	JOINT VITRE NO.L(D), ARTIC		
NC10-R1-411C	1	(ILLUST. NO.1)			
NC10-R1-431B	1	(ILLUST. NO.2)			
R1-452		WTHSTP NO 2(R),LINK	JOINT VITRE NO.2(D), ARTIC		
NC10-R1-412C	1	(ILLUST. NO.1)			
NC10-R1-432G AN(NC10-R1-432H)	1	(ILLUST. NO.2)			-1122
NC10-R1-432H	1	(ILLUST. NO.2)			1122-
R1-453		WTHSTP NO.3(R),LINK	JOINT VITRE NO.3(D), ARTIC		
NC10-R1-413C	1				
R1-461		WTHSTP NO.1(L),LINK	JOINT VITRE NO.1(G), ARTIC		
NC10-R1-421C	1	(ILLUST. NO.1)			
NC10-R1-441B	1	(ILLUST. NO.2)			
R1-462		WTHSTP NO.2(L),LINK	JOINT VITRE NO.2(G), ARTIC		
NC10-R1-422C	1	(ILLUST. NO.1)			
NC10-R1-442G AN(NC10-R1-442H)	1	(ILLUST. NO.2)			-1122
NC10-R1-442H	1	(ILLUST. NO.2)			1122-
R1-463		WTHSTP NO.3(L),LINK	JOINT VITRE NO.3(G), ARTIC		
NC10-R1-423C	1				
R1-491		GROMMET,SCREW-RETAINER	BAGUE,VIS-ARRET		
NA01-R1-491	16				

1122 NB35**-209882

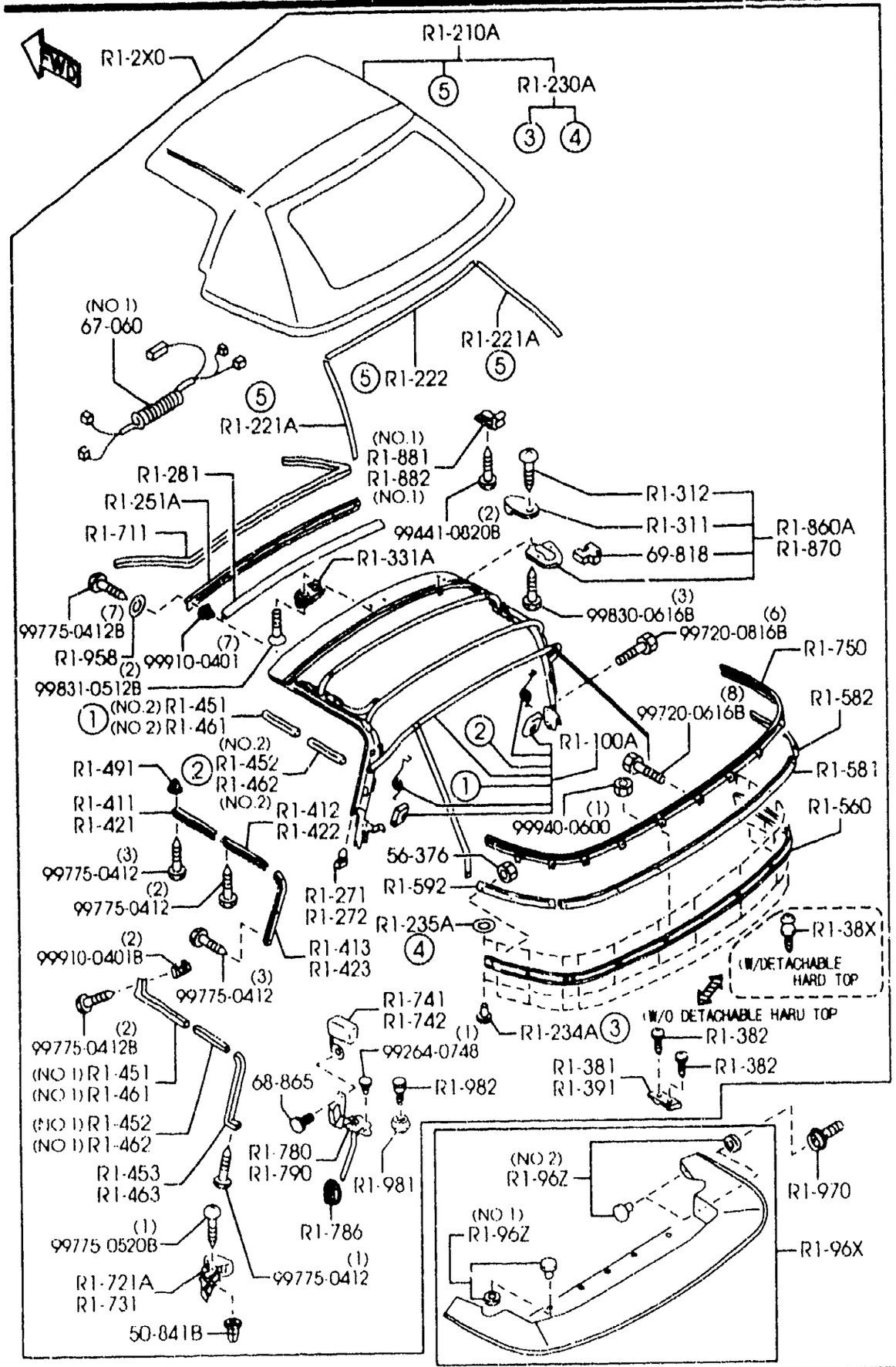

PART NO.	QTY	MODEL/RESTRICTION	MODEL/RESTRICTION	MODEL/RESTRICTION	FROM-TO
R1-560		RAIL,RAIN-SOFT TOP REAR	RAIL,PLUIE-T.TOILE AR		
NA01-R1-560EA (NC20-R1-560)	1				-1601
NC20-R1-560	1				1601-
R1-581		PLATE(C),SET-TOP FABRIC	PLAQUE(C),JEU-TOIL TOIT		
NA01-R1-581CA (NA01-R1-581D)	1				-1321
NA01-R1-581D	1				1321-
R1-582		PLATE(R),SET-TOP FABRIC	PLAQUE(D),JEU-TOILE TOIT		
NC10-R1-582A	1				
R1-592		PLATE(L),SET-TOP FABRIC	PLAQUE(G),JEU TOILE TOIT		
NC10-R1-592A	1				
R1-711		WTHSTP,FRONT HEADER	JOINT VITRE,COLLECTEUR AV		
NC10-R1-711C	1				
R1-721A		WTHSTP(R),CAB SIDE	PROFILE.ETANC.,COTE CAB.		
NC10-R1-721C	1				
R1-731		WTHSTP(L),CAB SIDE	PROFILE(G),COTE CAB.		
NC10-R1-731C	1				
R1-741		PROTR(R),MOULD-BELT LINE	PROTECTEUR(D),MOUL.-COURR		
NA01-R1-741B	1				
R1-742		PROTR(L),MOULD BELT LINE	PROTECTEUR(G),MOUL.-COURR		
NA01-R1-742C	1				
R1-750		MOULD,BELTLINE-REAR	MOULAGE,LIGNE BANDEAR		
NC10-R1-750D	1				
R1-780		COVER(R),DRAIN-SOFT TOP	COUVERCLE(D),RIG. T. TOILE		
NC10-R1-780FAN(NC10-R1-780G)	1				-1401
NC10-R1-780G	1				1401-
R1-786		GROMMET,DRAIN HOSE-TOP	BAGUE,TUYAU DRAINAGE-TOIT		
NA01-R1-786A	2				

1321 NB35**-215451
1401 NB35**-216419
1601 NB35**-219011

(W/DETACHABLE HARD TOP)

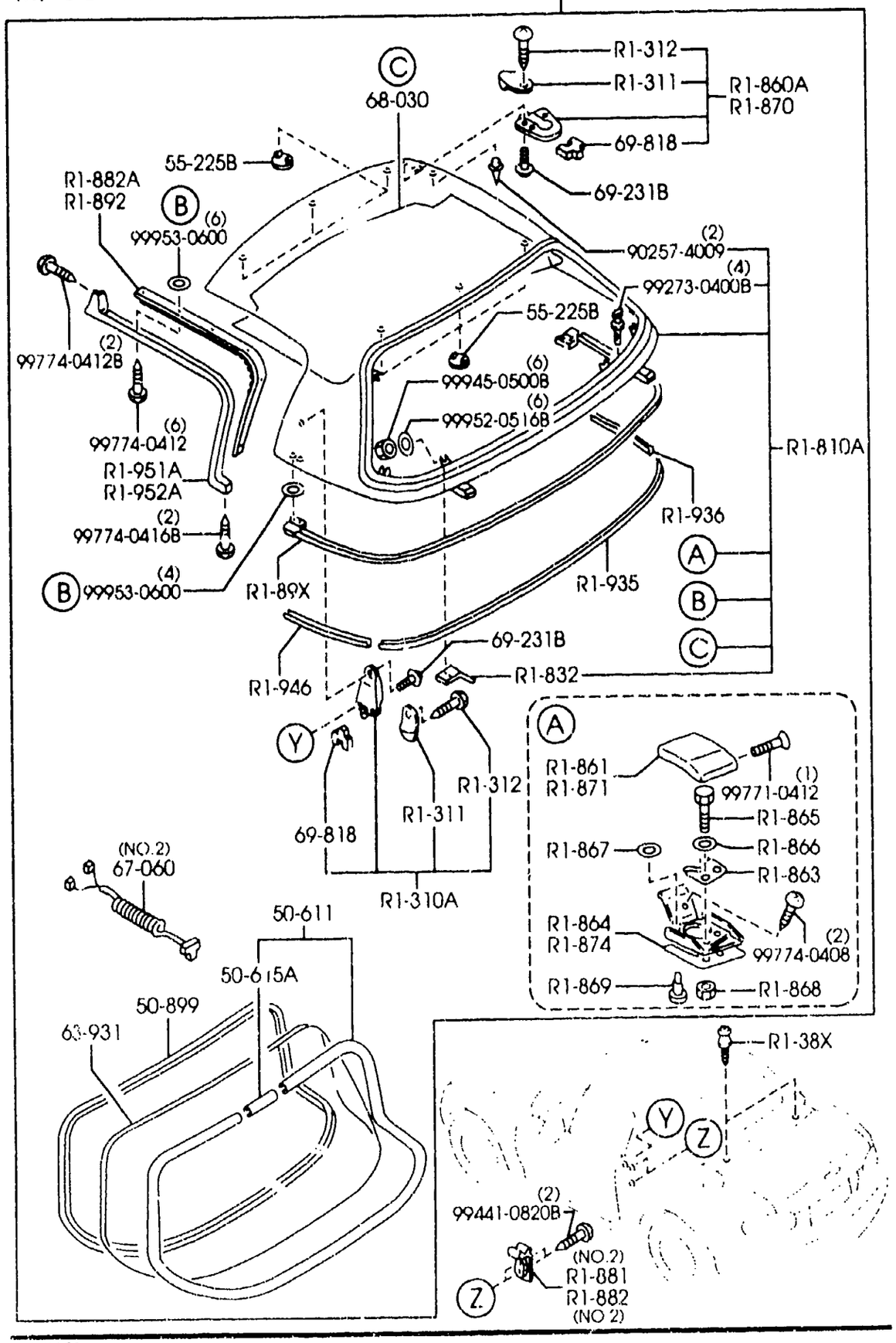

PART NO.	QTY	MODEL/RESTRICTION	MODEL/RESTRICTION	MODEL/RESTRICTION	FROM-TO
R1-790		COVER(L),DRAIN-SOFT TOP	COUVERCLE(G),RIG. T. TOILE		
NC10-R1-790F AN(NC10-R1-790G)	1				-1401
NC10-R1-790G	1				1401-
R1-810A		PANEL,ROOF	PANNEAU,PLAFOND-HAUT MOU		
NC10-R1-82XB	1	(W/DETACHABLE HARD TOP)			
PZ	EXT-	A3F BRILLIANT BLACK	A3F NOIR BRILLIANT		
SU	EXT-	A3E CLASSIC RED	A3E RQUGE CLASSIQUE		
09	EXT-	A3D PURE WHITE	A3D BLANC PURE		
46	EXT-	18J GRACE GREEN MC	18J VERT GRACIEUX MC		
50	EXT-	22A SUPREM BLUE MC	22A BLEU SUPREME METALLI		
51	EXT-	23C CRYSTAL BLUE	23C BLEU CRISTAL		
55	EXT-	A3V NEO GREEN CLE	A3V NEO-VERT CLAIR		
61	EXT-	24A STARRY BLUE MC	24A BLUE ETOILE MICA		
68	EXT-	22V SILVER METALLIC	22V ARGENT METALLIQUE		
76	EXT-	26S BLAZING YELLOW MC	26S JAUNE DE FLAMBAGE MI		
R1-810C		ROOF,DETACHABLE TOP	TOIT,CAPOTE AMOVIBLE		
NC10-R1-810K	1	(W/DETACHABLE HARD TOP)			-1101
PZ	EXT-	A3F BRILLIANT BLACK	A3F NOIR BRILLIANT		
SU	EXT-	A3E CLASSIC RED	A3E RQUGE CLASSIQUE		
09	EXT-	A3D PURE WHITE	A3D BLANC PURE		
46	EXT-	18J NEW GREEN M	18J VERT NOUVEAU METALL.		
50	EXT-	22A SUPREM BLUE MC	22A BLEU SUPREME METALLI		
51	EXT-	23C CRYSTAL BLUE	23C BLEU CRISTAL		
68	EXT-	22V SILVER METALLIC	22V ARGENT METALLIQUE		
NC10-R1-810L	1	(W/DETACHABLE HARD TOP)			1101-1716
PZ	EXT-	A3F BRILLIANT BLACK	A3F NOIR BRILLIANT		
SU	EXT-	A3E CLASSIC RED	A3E RQUGE CLASSIQUE		
09	EXT-	A3D PURE WHITE	A3D BLANC PURE		

1101 NB35**-208709
1401 NB35**-216419
1716 NB35**-220116

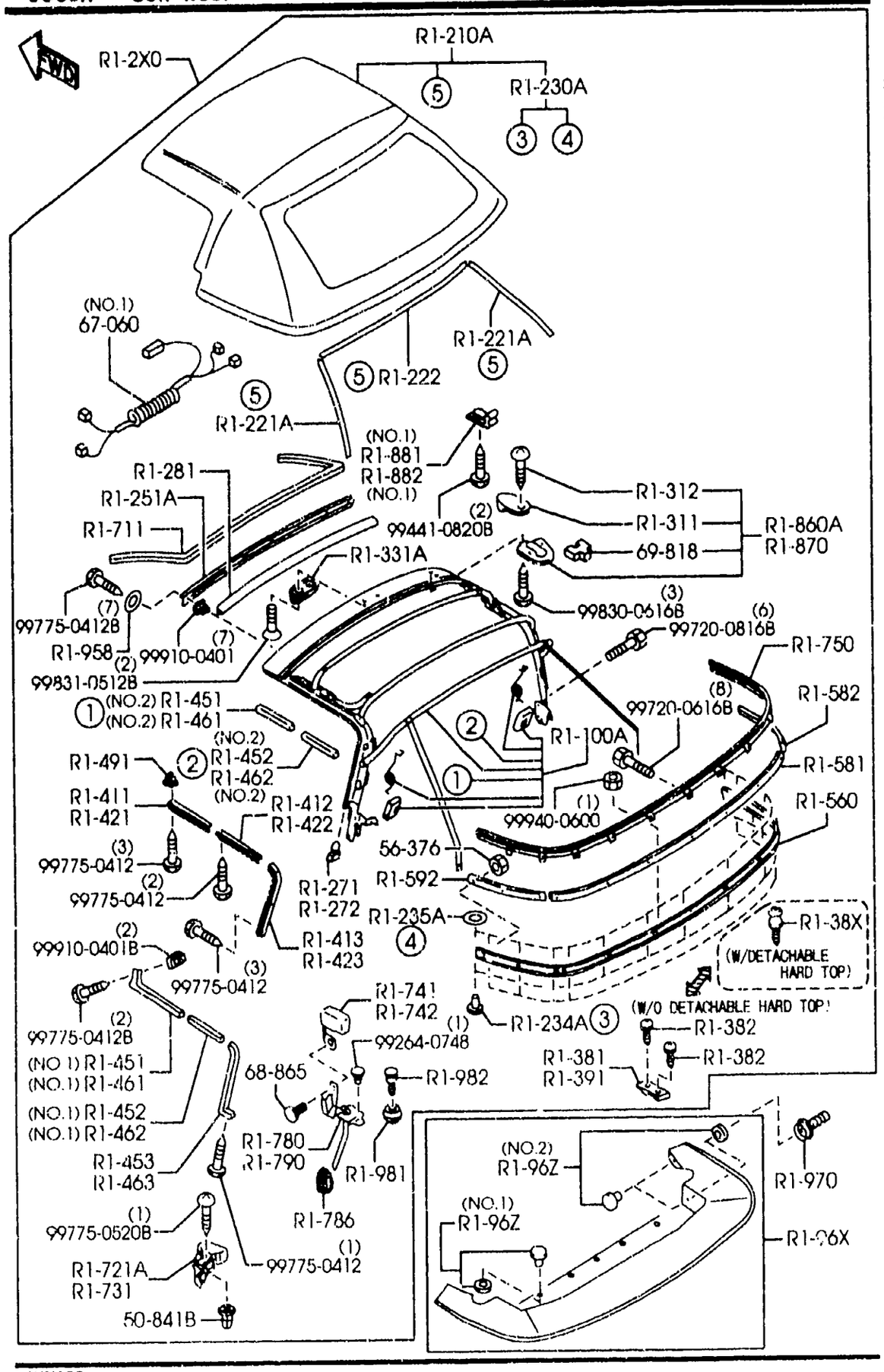

PART NO.	QTY	MODEL/RESTRICTION	MODEL/RESTRICTION	MODEL/RESTRICTION	FROM-TO
CONT'D					
46	EXT-	18J NEW GREEN M	18J VERT NOUVEAU METALL.		
50	EXT-	22A SUPREM BLUE MC	22A BLEU SUPREME METALLI		
51	EXT-	23C CRYSTAL BLUE	23C BLEU CRISTAL		
55	EXT-	A3V NEO GREEN CLE	A3V NEO-VERT CLAIR		
68	EXT-	22V SILVER METALLIC	22V ARGENT METALLIQUE		
NC10-R1-810N	1	(W/DETACHABLE HARD TOP)			1716-1904
PZ	EXT-	A3F BRILLIANT BLACK	A3F NOIR BRILLIANT		
SU	EXT-	A3E CLASSIC RED	A3E ROUGE CLASSIQUE		
09	EXT-	A3D PURE WHITE	A3D BLANC PURE		
46	EXT-	18J NEW GREEN M	18J VERT NOUVEAU METALL.		
50	EXT-	22A SUPREM BLUE MC	22A BLEU SUPREME METALLI		
51	EXT-	23C CRYSTAL BLUE	23C BLEU CRISTAL		
55	EXT-	A3V NEO GREEN CLE	A3V NEO-VERT CLAIR		
61	EXT-	24A STARRY BLUE MC	24A BLUE ETOILE MICA		
68	EXT-	22V SILVER METALLIC	22V ARGENT METALLIQUE		
NC10-R1-810P	1				1904-
HZ	EXT-	HZ SUNBURST YELLOW	HZ JAUNE BRULE		
PZ	EXT-	A3F BRILLIANT BLACK	A3F NOIR BRILLIANT		
SU	EXT-	A3E CLASSIC RED	A3E ROUGE CLASSIQUE		
09	EXT-	A3D PURE WHITE	A3D BLANC PURE		
46	EXT-	18J NEW GREEN M	18J VERT NOUVEAU METALL.		
50	EXT-	22A SUPREM BLUE MC	22A BLEU SUPREME METALLI		
51	EXT-	23C CRYSTAL BLUE	23C BLEU CRISTAL		
55	EXT-	A3V NEO GREEN CLE	A3V NEO-VERT CLAIR		
61	EXT-	24A STARRY BLUE MC	24A BLUE ETOILE MICA		
68	EXT-	22V SILVER METALLIC	22V ARGENT METALLIQUE		
76	EXT-	26S BLAZING YELLOW MC	26S JAUNE DE FLAMBAGE MI		
R1-832		PLATE,CUSHION-D. TOP	PLAQUE,AMORT.-TETE PORT.		

1716 NB35**-220116
1904 NB35**-221872

(W/DETACHABLE HARD TOP)

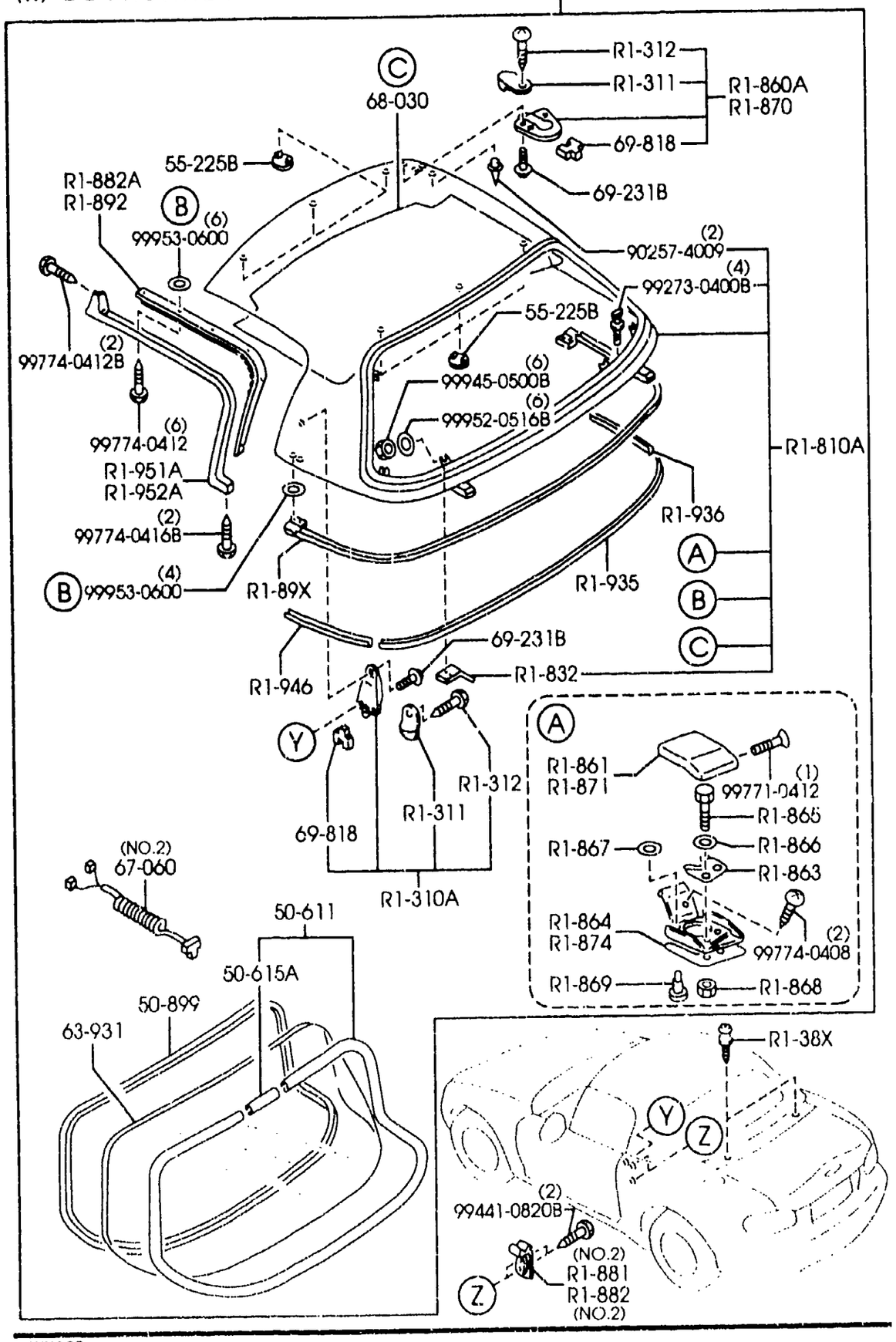

PART NO.	QTY	MODEL/RESTRICTION	MODEL/RESTRICTION	MODEL/RESTRICTION	FROM-TO
CONT'D					
NC10-R1-832	1	(FOR LEFT SIDE) (W/DETACHABLE HARD TOP)			
NC10-R1-833	1	(FOR RIGHT SIDE) (W/DETACHABLE HARD TOP)			
R1-860A		LOCK(R),TOP	VERROU(D),PANNEA PLAF.-AV		
NA01-R1-310G	1	(W/O DETACHABLE HARD TOP)			
NA01-R1-310G A (NA01-R1-310J)	1	(W/DETACHABLE HARD TOP)			-1716
NA01-R1-310J	1	(W/DETACHABLE HARD TOP)			1716-
R1-861		COVER(R),DECK LOCK	COUVERCLE,VERROU COUVERT.		
NA01-R1-861	1	(W/DETACHABLE HARD TOP)			
R1-863		PLATE,DECK LOCK	PLAQUE,VERROU COUVERT.		
NA01-R1-863	2	(W/DETACHABLE HARD TOP)			
R1-864		SHEET(R),DECK LOCK	TOLE(G),VERROU COUVERT.		
NA01-R1-864	1	(W/DETACHABLE HARD TOP)			
R1-865		BOLT,DECK LOCK	BOULON,VERROU COUVERT.		
NA01-R1-865	4	(W/DETACHABLE HARD TOP)			
R1-866		WASHER'A',DECK LOCK	RONDELLE'A',VERROU COUVER		
NA01-R1-866	4	(W/DETACHABLE HARD TOP)			
R1-867		WASHER'B',DECK LOCK	RONDELLE'B',VERROU COUVER		
NA01-R1-867	2	(W/DETACHABLE HARD TOP)			
R1-868		NUT,DECK LOCK	ECROU,VERROU COUVERT		
NA01-R1-868	4	(W/DETACHABLE HARD TOP)			
R1-869		PIN,DECK LOCK	AXE,VERROU COUVERT.		
NA01-R1-869	2	(W/DETACHABLE HARD TOP)			

1716 NB35**-220116

6330A SUN ROOF

(1/2)

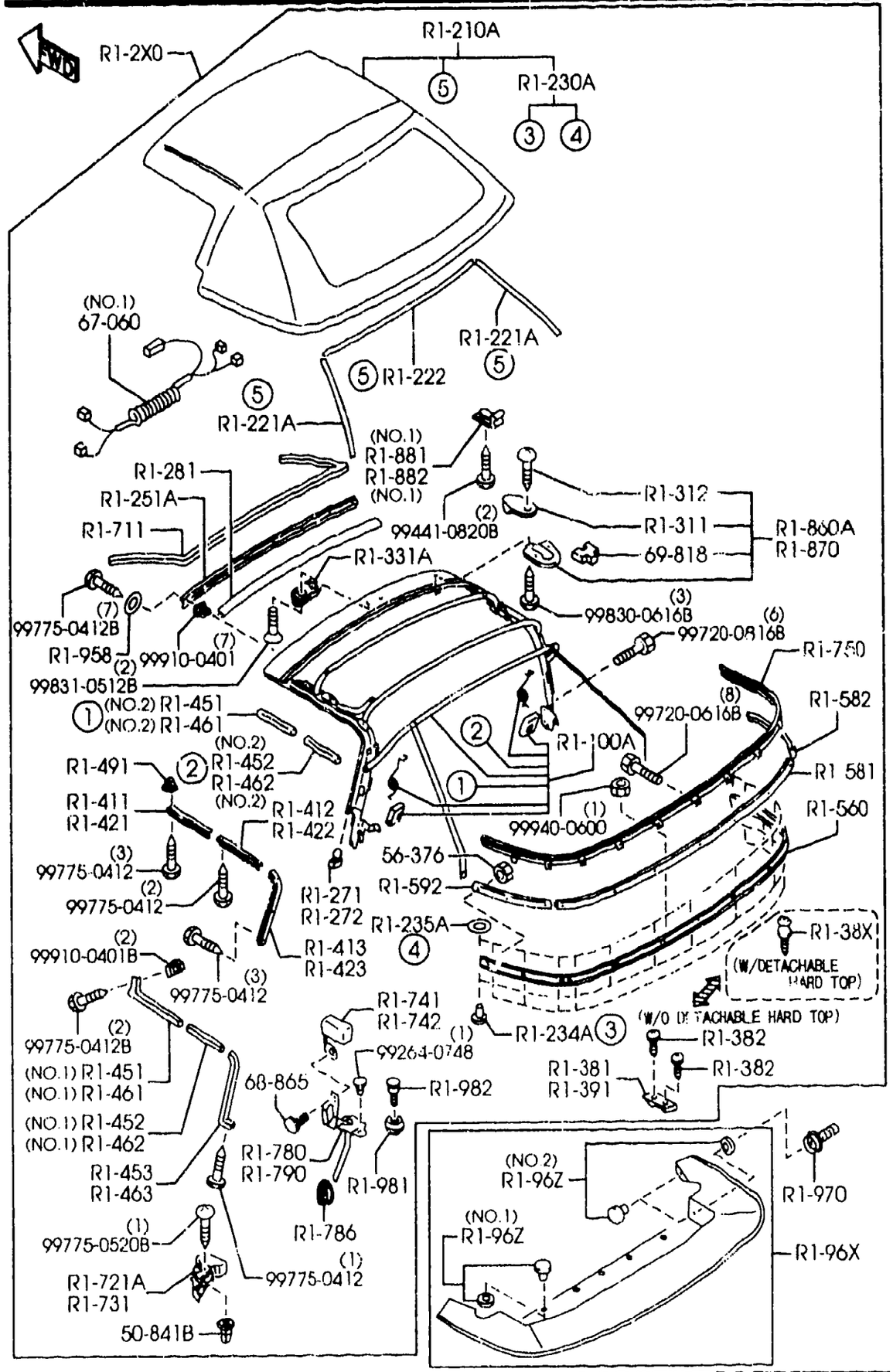

PART NO.	QTY	MODEL/RESTRICTION	MODEL/RESTRICTION	MODEL/RESTRICTION	FROM-TO
R1-870		LOCK(L),TOP	VERROU(G),PANNEAU PL AF-AV		
NA01-R1-320G	1	(W/DETACHABLE HARD T OP)			
NA01-R1-320G A (NA01-R1-320J)	1	(W/O DETACHABLE HARD TOP)			-1716
NA01-R1-320J	1	(W/DETACHABLE HARD T OP)			1716-
R1-871		COVER(L),DECK LOCK	COUVERCLE,VERROU COU VERT.		
NA01-R1-871	1	(W/DETACHABLE HARD T OP)			
R1-874		SHEET(L),DECK LOCK	TOLE(G),VERROU COUVE RT.		
NA01-R1-874	1	(W/DETACHABLE HARD T OP)			
R1-881		STRIKER(R),LOCK-TOP	MARTEAU(D),CAPUC.-CO LLECT		
NA01-R1-361F	1	(ILLUST. NO.1)			
NA02-R1-361D	1	(ILLUST. NO.2) (W/DETACHABLE HARD T OP)			
R1-882		STRIKER(L),LOCK-TOP	MARTEAU(G),CAPUC.-CO LLECT		
NA01-R1-371F	1	(ILLUST. NO.1)			
NA02-R1-371D	1	(ILLUST. NO.2) (W/DETACHABLE HARD T OP)			
R1-882A		RETAINER(R),WTHSTP-D .TOP	ARRET(D),PROF.ETANC. -T.P.		
NA01-R1-882	1	(W/DETACHABLE HARD T OP)			
R1-89X		WEATHERSTRIP,D.TOP-R EAR	PROFILE ETANCHEITE-T .P.AR		
NA01-R1-89XB	1	(W/DETACHABLE HARD T OP)			
R1-892		RETAINER(L),WTHSTP-D .TOP	ARRET(G),PROF.ETANC. -T.P.		
NA01-R1-892	1	(W/DETACHABLE HARD T OP)			
R1-935		PROTECTOR(C),EDGE-D. TOP	PROTECTEUR,BORD-TETE P AR		
NA01-R1-935B	1	(W/DETACHABLE HARD T OP)			
R1-936		PROTECTOR(R),EDGE-D. TOP	PROTECTEUR(D),BOUT-T .PORT		

1716 NB35**-220116

(W/DETACHABLE HARD TOP)

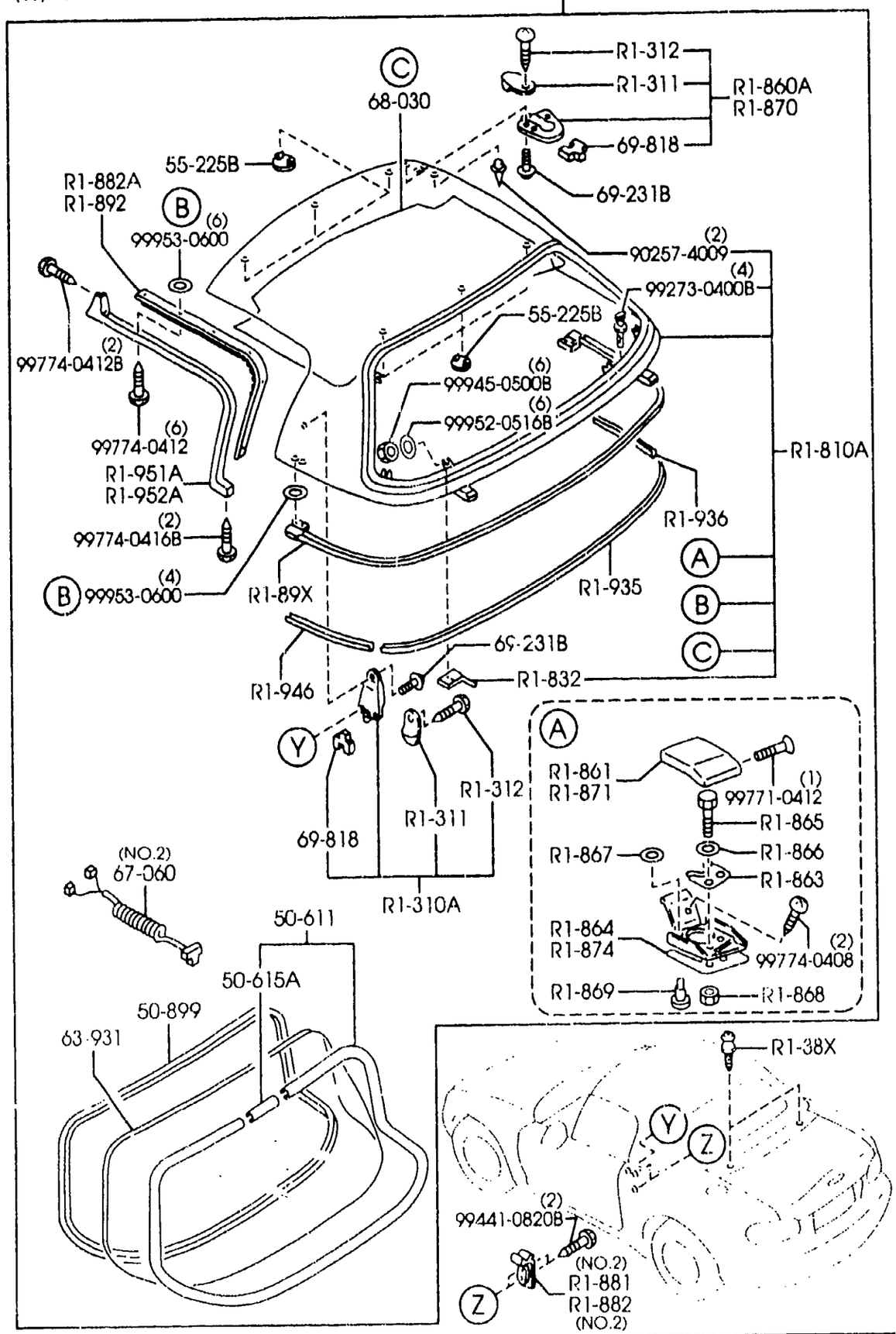

PART NO.	QTY	MODEL/RESTRICTION	MODEL/RESTRICTION	MODEL/RESTRICTION	FROM-TO
CONT'D					
NA01-R1-936A	1	(W/DETACHABLE HARD TOP)			
R1-946		PROTECTOR(L),EDGE-D.TOP	PROTECTEUR(G),BOUT-T.PORT		
NA01-R1-946A	1	(W/DETACHABLE HARD TOP)			
R1-951A		WTHSTP(R),ROOF PANEL	JOINT VITRE(D),PANN.PLAF		
NC10-R1-881D	1	(W/DETACHABLE HARD TOP)			
R1-952A		WTHSTP(L),ROOF PANEL	JOINT VITRE(G),PANN.PLAF		
NC10-R1-891D	1	(W/DETACHABLE HARD TOP)			
R1-958		WASHER,HOOK'A'&'B'	RONDELLE,CROCHET'A'&'B'		
B235-R1-958A	4				
R1-96X		COVER,TOP FABRIC	COUVERCLE,TOILE TETE		
NC10-R1-960C	1				
21	INT-	NB4 NB8 TAN	NB4 NB8 TAN		
66	INT-	NB3 BLACK	NB3 NOIR		
R1-96Z		HOOK,TOP BOOT	CROCHET,		
NA01-R1-96Z	5	(ILLUST. NO.1)			
00	INT-	NB3 BLACK	NB3 NOIR		
75	INT-	NB4 NB8 SILVER	NB4 NB8 ARGENT		
NC10-R1-96Z	4	(ILLUST. NO.2)			
R1-970		HOOK,REAR DECK	CROCHET,COUVERTURE AR		
NC10-R1-970B	4				
R1-981		STOPPER,SOFT TOP	ARRET,TOIT TOILE		
NA01-R1-981A	2				
R1-982		BOLT,STOPPER-SOFT TOP	BOULON,ARRET-TOIT TOILE		
NA01-R1-982B	2				
50-611		MOULD,RR.WINDOW	MOULURE FENETRE ARR.		
NAY1-63-930	1	(W/DETACHABLE HARD TOP)			

6330A SUN ROOF

(1/2)

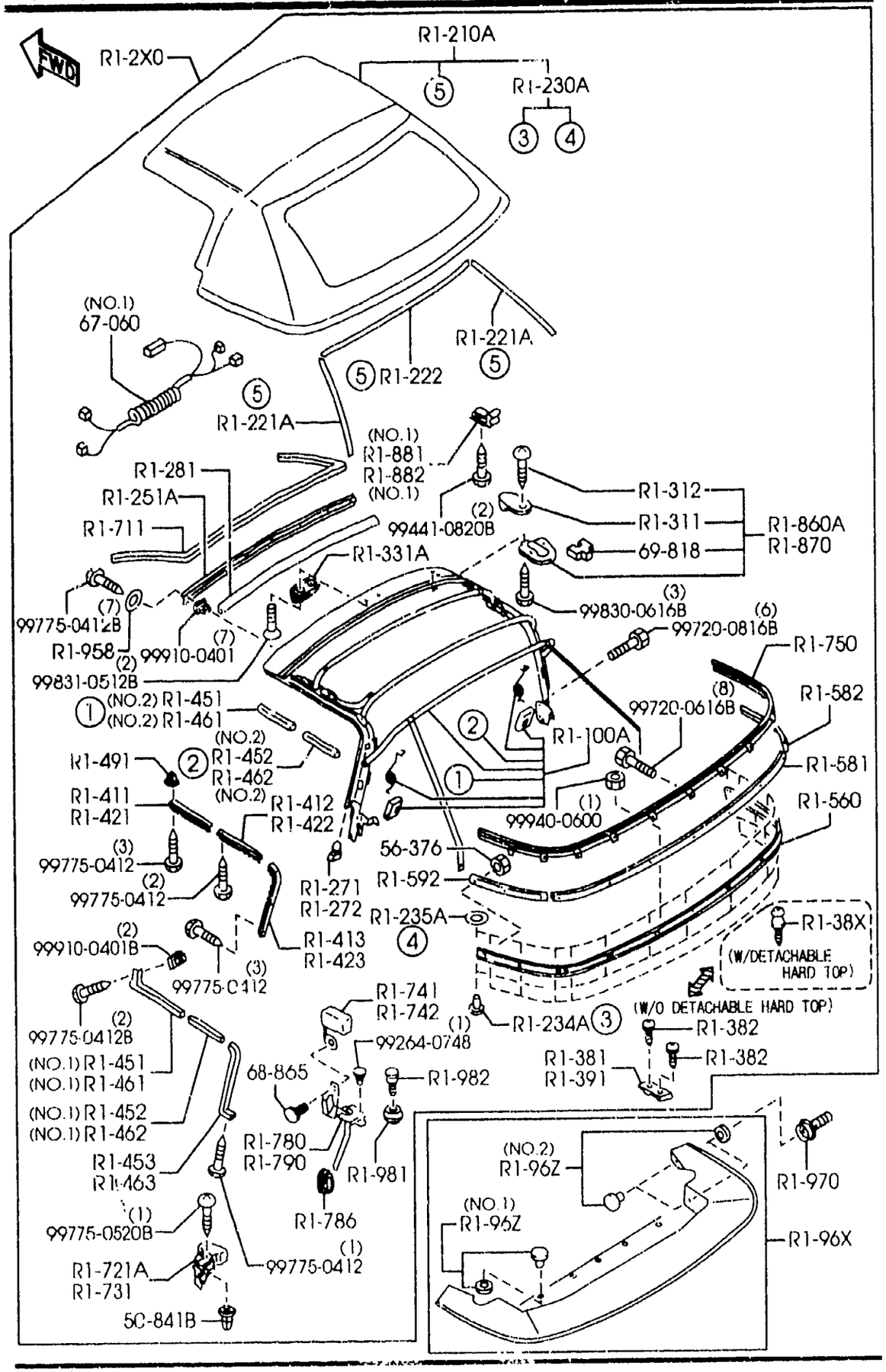

PART NO.	QTY	MODEL/RESTRICTION	MODEL/RESTRICTION	MODEL/RESTRICTION	FROM-TO
50-615A NA01-63-934	1	JOINT,BACK WINDOW MOULD (W/DETACHABLE HARD TOP)	RACCORD,		
50-841B H260-50-841	2	GROMMET,SCREW	ANNEAU,VIS		
50-895 NA01-63-095	1	DAM,REAR-WIND. (W/DETACHABLE HARD TOP)	BARRAGE,AR.-PARE BRISE		
55-225B G030-55-225	6	COVER,HOLE (W/DETACHABLE HARD TOP)	COUVERCLE		
00	INT-	NB3 NB4 NB8 BLACK	NB3 NB4 NB8 NOIR		
56-376 B001-56-376	13	NUT,SELF LOCK	ECROU,GARDE-BOUE		
63-931 NB40-63-931	1	GLASS,BACK WINDOW (W/DETACHABLE HARD TOP)	GLACE DE LUNETTE AR		
67-060 NC10-67-060D	1	HARNESS NO.2,REAR (ILLUST. NO.1)	FAISCEAU AR NO 2		
NC11-67-060A	1	(ILLUST. NO.2) (W/DETACHABLE HARD TOP)			
68-030 N007-68-031	1	CEILING,TOP (W/DETACHABLE HARD TOP)	CIEL DE PAVILLON		
00	INT-	NB3 NB4 NB8 BLACK	NB3 NB4 NB8 NOIR		
68-865 G032-68-865A	2	FASTENER	AGRAFE		
00	INT-	NB3 NB4 NB8 BLACK	NB3 NB4 NB8 NOIR		
69-231B NC10-69-9W6	12	SCREW (W/DETACHABLE HARD TOP)	VIS		
69-818		PAD	FIBRANNE		

6330A SUN ROOF

(2/2)

(W/DETACHABLE HARD TOP)

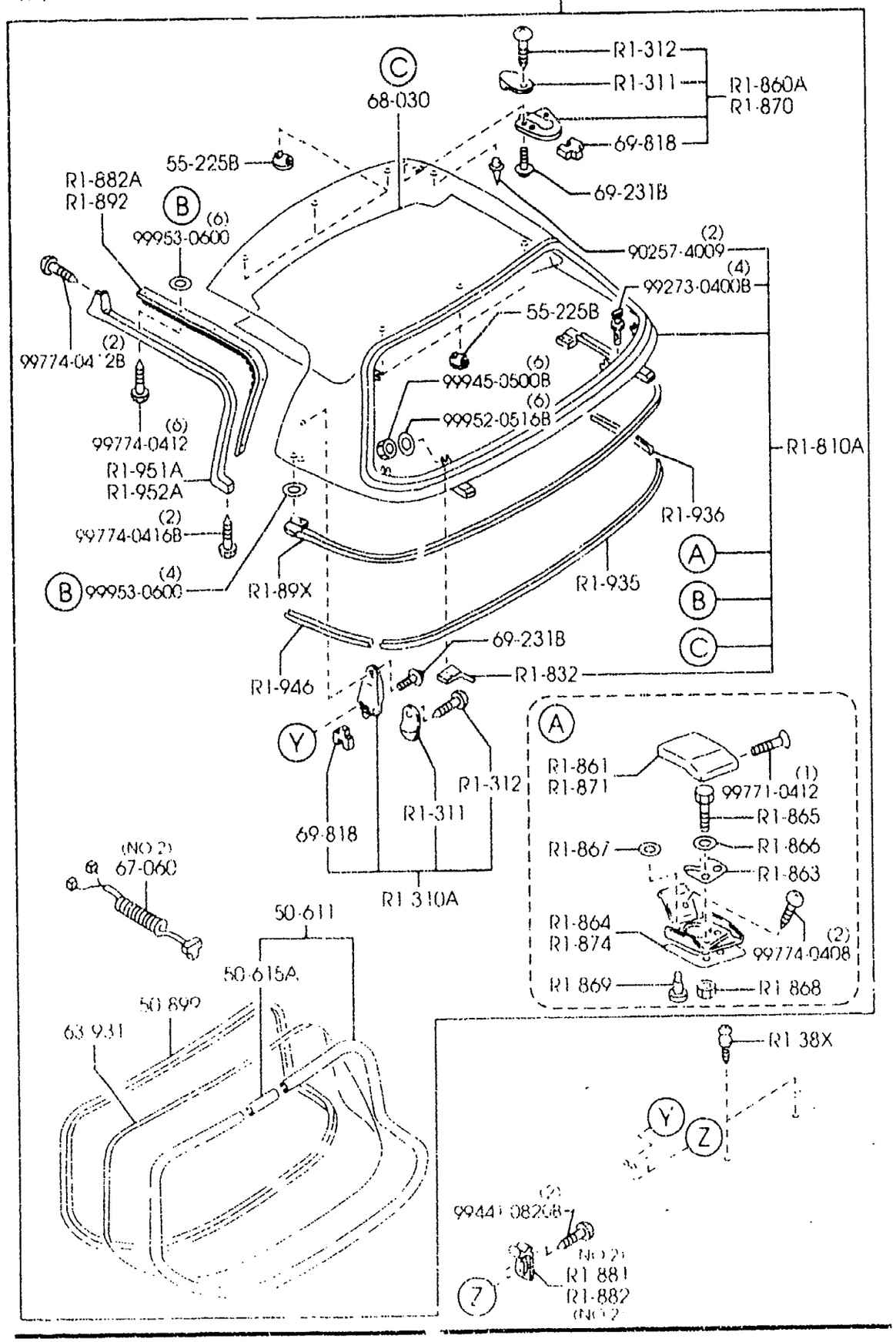

PART NO.	QTY	MODEL/RESTRICTION	MODEL/RESTRICTION	MODEL/RESTRICTION	FROM-TO
CONT'D					
NA01-R1-313B	2				

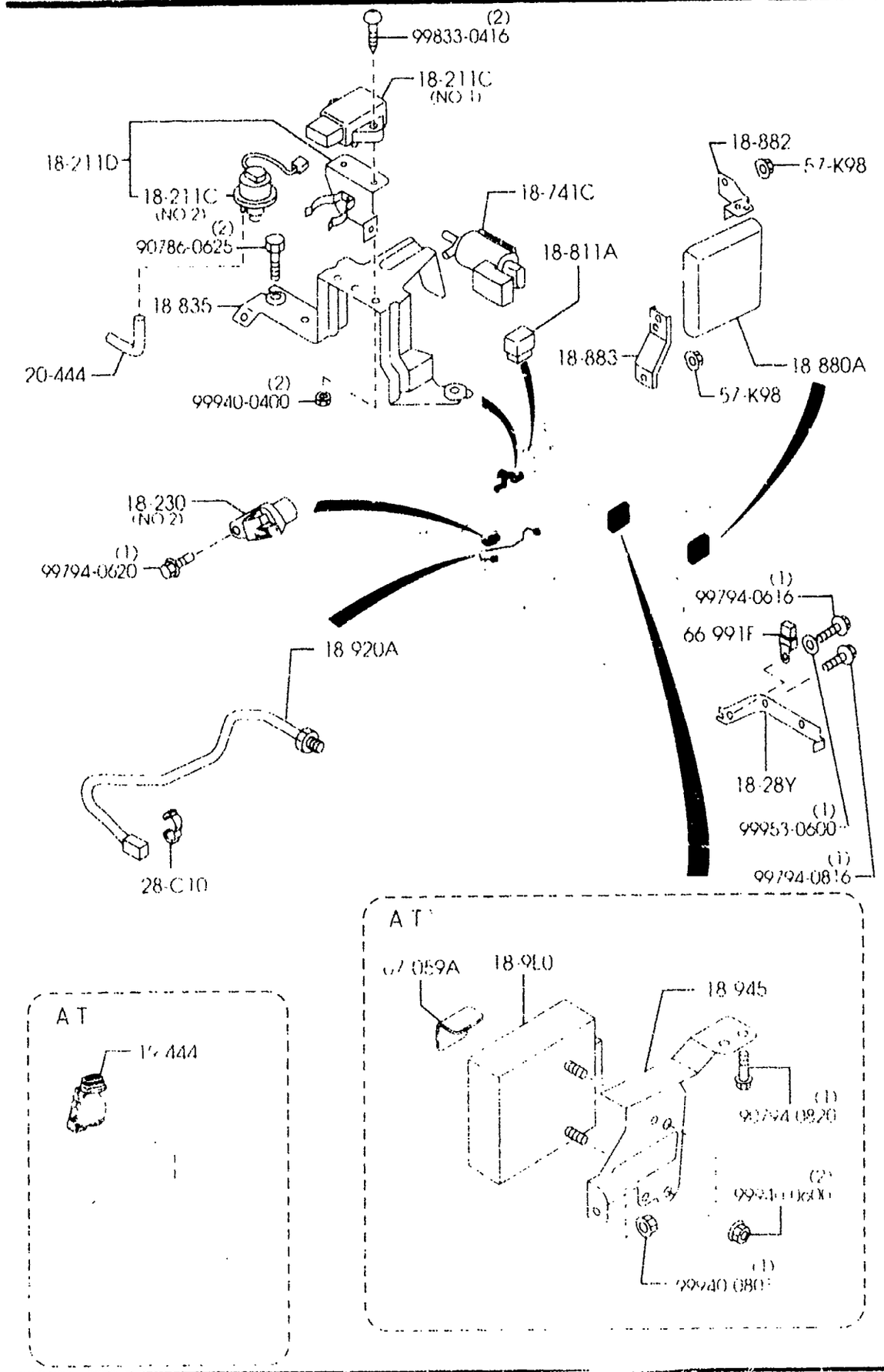

AUNA08

1N03721

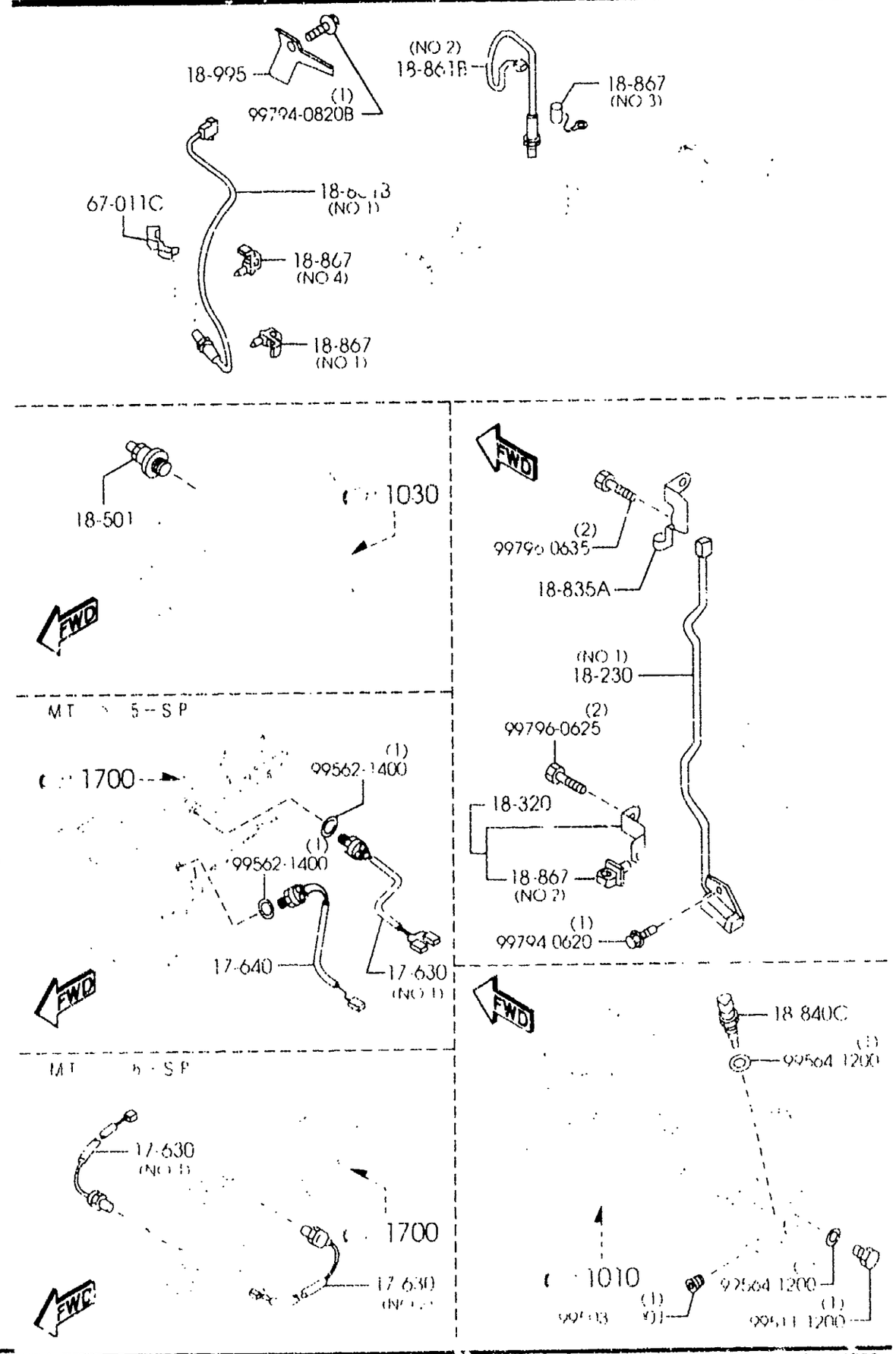

AUNA08

1N03722

6600A ENGINE SWITCHES & RELAYS

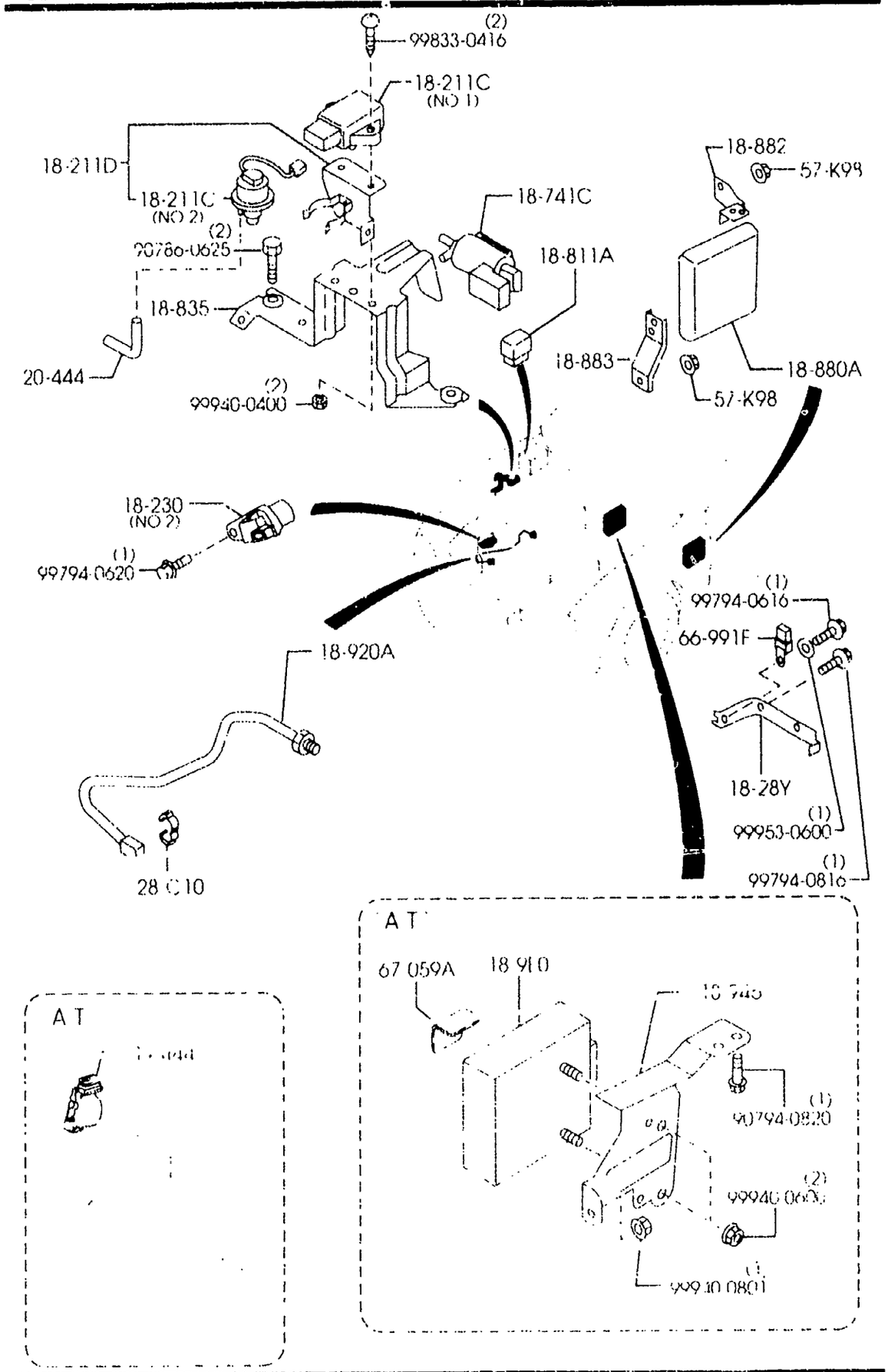

PART NO.	QTY	MODEL/RESTRICTION	MODEL/RESTRICTION	MODEL/RESTRICTION	FROM-TO
17-630		SWITCH	COMMUTATEUR		
Y601-17-640	1	(ILLUST. NO.1) (6-SP)	(6-VITS)		
Y602-17-640	1	(ILLUST. NO.2) (6-SP)	(6-VITS)		
8118-17-640B	1	(ILLUST. NO.1) (5-SP)	(5-VITS)		
17-640		SWITCH,BACK UP LAMP	COMMUTATEUR, FEU DE RECUL		
M507-17-640	1	(5-SP)	(5-VITS)		
18-211C		SENSOR,BOOST	CAPTEUR DE DEPRESSION D'ADM.		
BP4W-13 211	1	(ILLUST. NO.1)			
BP6F-18-211	1	(ILLUST. NO.2)			
18-211D		SENSOR,BOOST	CAPTEUR DE DEPRESSION D'ADM.		
BP6F-18-[illegible]	1				
18-230		SENSOR,CRANKSHAFT POSI.	DETECTEUR,ANGLE MANIVEL.		
BP4W-18-221B	1	(ILLUST. NO.1)			
BP4W-18-230	1	(ILLUST. NO.2)			
18-28Y		BRACKET,CONDENSER	SUPPORT,CADRE CONDESAT.		
BP6D-18-28X	1				
18-320		BRACKET	SUPPORT		
BP4W-18-28YA AN(BP4W-18-28YB)	1				-0801
BP4W-18-28YB	1				0801-0908
BP6D-18-28Y	1				0908-
18-501		SWITCH,OIL PRESSURE	INTERRUPTEUR, PRESSION HUILE		
[illegible] 18-501	1				
18-741C		VALVE,SOLENOID	SOUPAPE DE SOLENOID		
BP4Y-18-741	1				
18-811A		RELAY,CONTROL	RELAIS DE COMMANDE		
B5B4-18-811	1				
18-835		BRACKET,WIRE CLIP-OXYGEN	CORNIERE,CLIP D CABLE/OXY		

0801 NB35**-200666
0908 NB35**-204086

6600A ENGINE SWITCHES & RELAYS

(2/2)

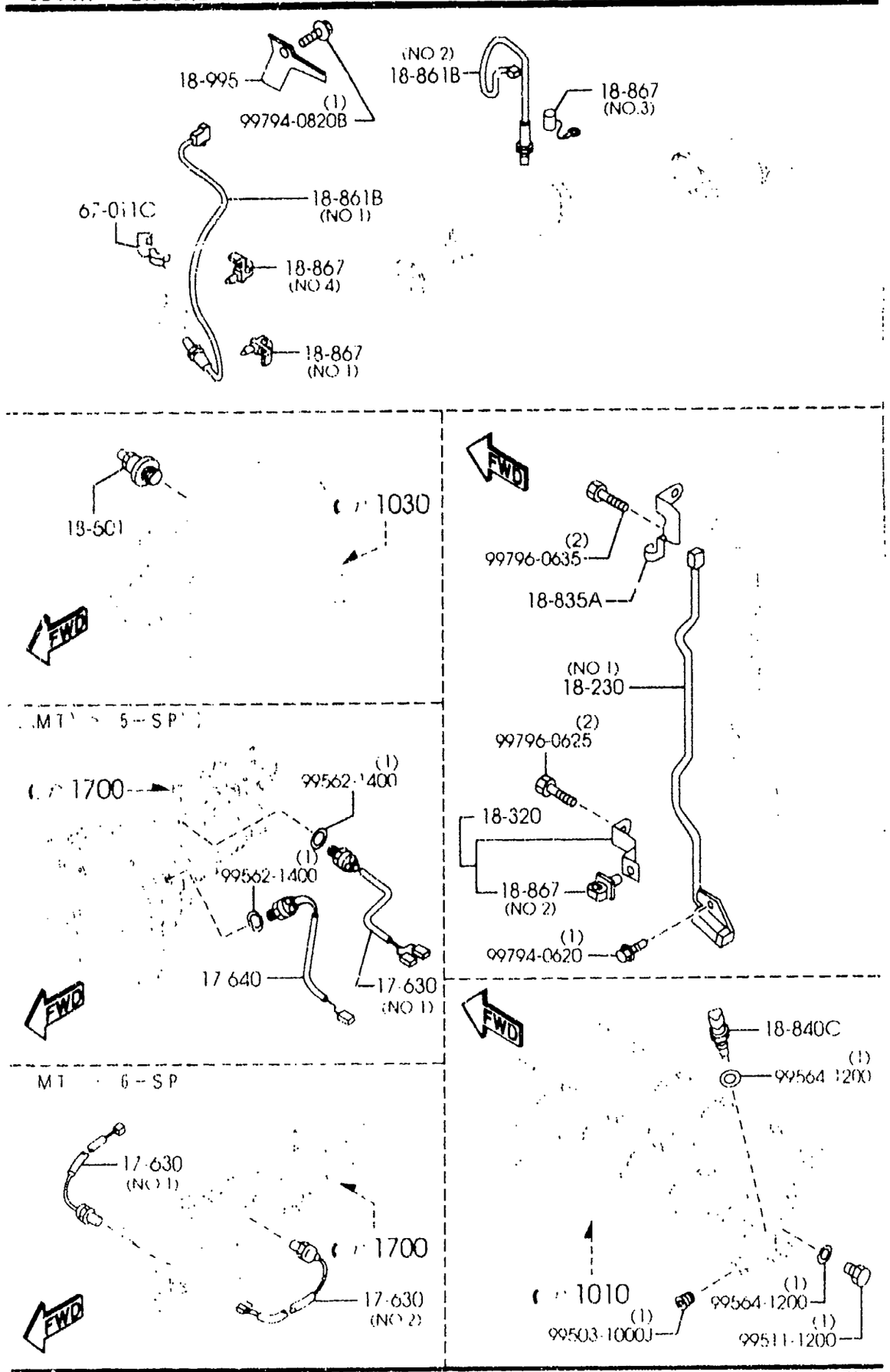

PART NO.	QTY	MODEL/RESTRICTION	MODEL/RESTRICTION	MODEL/RESTRICTION	FROM-TO
CONT'D					
BP4W-18-835A	1				
+---------+					
| 18-835A |		BRACKET	SUPPORT,DETECT.SURPRES.		
+---------+					
BP4Y-18-835A	1				
+---------+					
| 18-840C |		SENSOR,TEMP.-ENG.COOLANT	CAPTEUR DE TMPERATURE D'EAU		
+---------+					
KLK1-18-840	1				
+---------+					
| 18-861B |		SENSOR,OXYGEN	CAPTEUR D'OXYGENE		
+---------+					
BP6F-18-861B	1	(ILLUST. NO.1)			
BP6G-18-861B A (BP6G-18-861C)	1	(ILLUST. NO.2)			-0915
BP6G-18-861C	1	(ILLUST. NO.2)			0915-
+---------+					
| 18-867 |		CLIP	ATTACHE		
+---------+					
BPE8-18-867A	1	(ILLUST. NO.1)			
B367-18-867	1	(ILLUST. NO.2)			
B6EX-18-867	1	(ILLUST. NO.3)			
G607-18-867	1	(ILLUST. NO.4)			
+---------+					
| 18-880A |		MODULE,POWERTRAIN CONTROL	UNITE COMMANDE,INJ ESSC		
+---------+					
BP6F-18-881C A (BP6F-18-881D)	1	(MT)	(B.V.MANU)		-0C25
BP6H-18-881C A (BP6H-18-881D)	1	(AT)	(B.V.AUTOM)		-0C25
BP6F-18-881D A (BP6F-18-881F)	1	(MT)	(B.V.MANU)		0C25-1701
BP6H-18-881D A (BP6H-18-881F)	1	(AT)	(B.V.AUTOM)		0C25-1701
BP6F-18-881F A (BP6F-18-881G)	1	(MT)	(B.V.MANU)		1701-1820
BP6H-18-881F A (BP6H-18-881G)	1	(AT)	(B.V.AUTOM)		1701-1820
*BP6F-18-881G	1	(MT)	(B.V.MANU)		1820-
*BP6H-18-881G	1	(AT)	(B.V.AUTOM)		1820-
+---------+					
| 18-882 |		BRACKET,CONTROL UNIT	SUPPORT,UNITE CONTROLE		
+---------+					
BP4W-18-882	1				
+---------+					
| 18-883 |		BRACKET,CONTROL UNIT	SUPPORT,UNITE CONTROLE		
+---------+					
BP4W-18-883	1				

0915 NB35**-204335
0C25 NB35**-208411
1701 NB35**-219555
1820 NB35**-221227

6600A ENGINE SWITCHES & RELAYS (1/2)

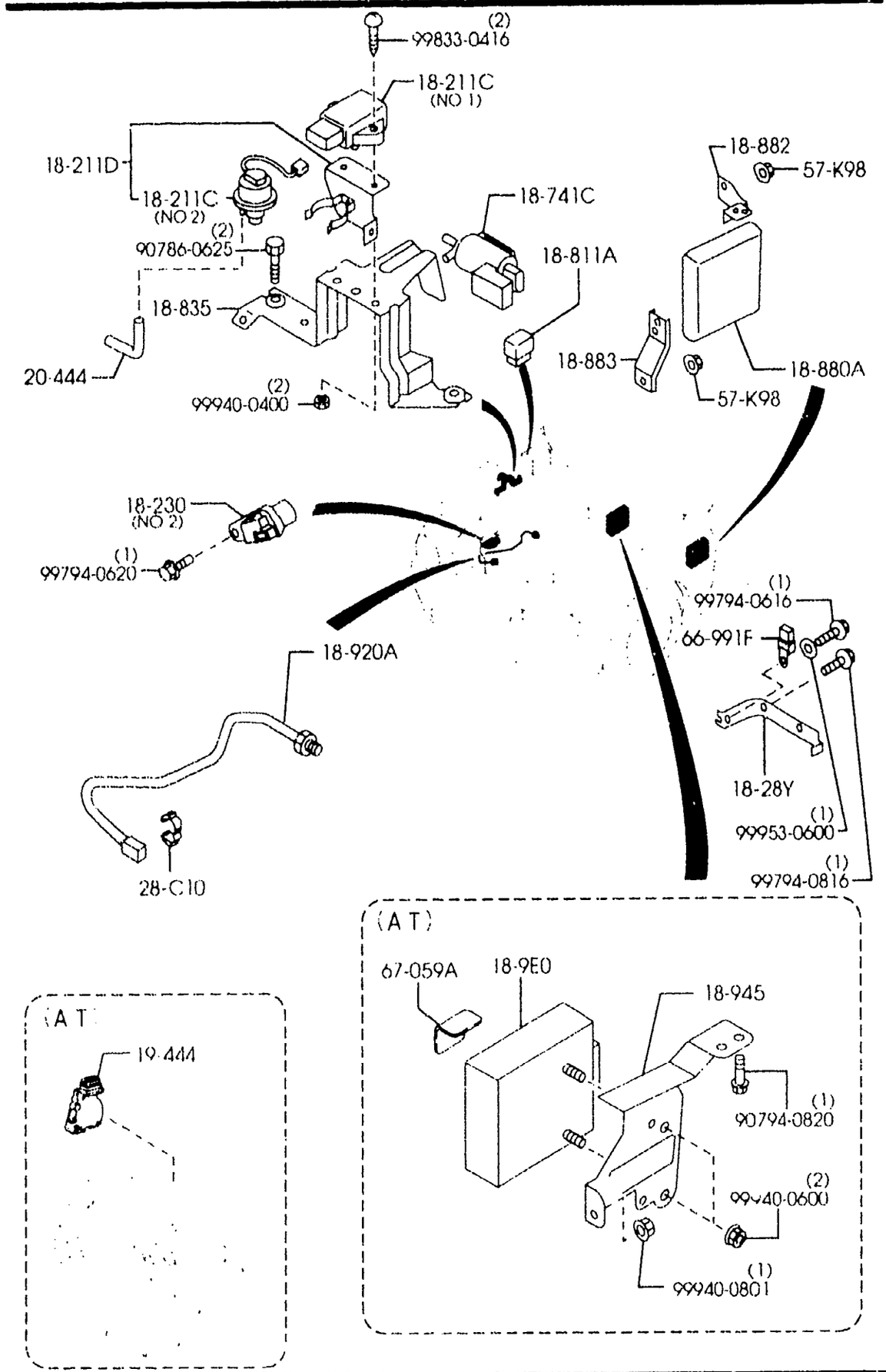

PART NO.	QTY	MODEL/RESTRICTION	MODEL/RESTRICTION	MODEL/RESTRICTION	FROM-TO
18-9E0 BP6H-18-9E1	1	MODULE,PWT.CONT.-A/T (AT)	UNITE,CONTROLE-A/T. (B.V.AUTOM)		
18-920A JEB3-18-921A	1	SENSOR,KNOCK	CAPTEUR DE CLIQUETIS		
18-945 BP5B-18-945A	1	BRACKET,CONT.UNIT (AT)	SUPPORT,UNITE CONTROL (B.V.AUTOM)		
18-995 BP6D-18-996	1	CLIP	ATTACHE		
19-444 BV8B-19-444	1	SWITCH,INHIBITOR (AT)	RELAIS (B.V.AUTOM)		
20-444 JE02-20-444	1	TUBE,VACUUM	TUBE,DEPRESSION		
28-C10 JE48-18-868	1	BAND,PIPE	BANDE,TUYAU		
57-K98 FC66-57-K98	3	NUT	ECROU,MODULE SAC AIR		
66-991F ZL01-66-991	1	CONDENSER	CONDENSATEUR		
67-011C E356-18-141	1	CLIP	CLIP		
67-059A S001-67-153	1	PROTECTOR (AT)	PROTECTEUR (B.V.AUTOM)		

6610A DASHBOARD SWITCHES

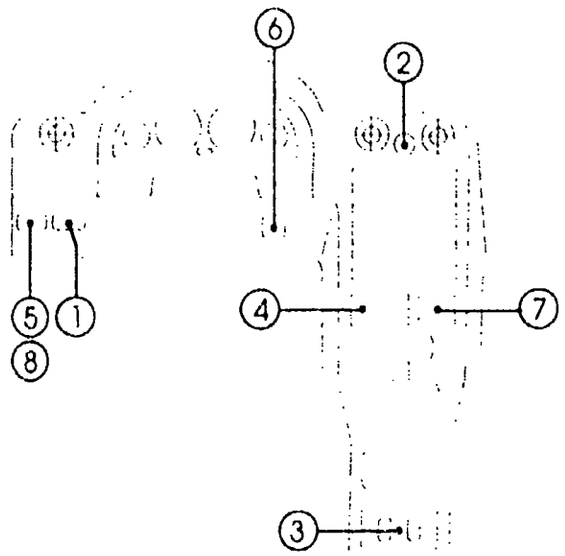

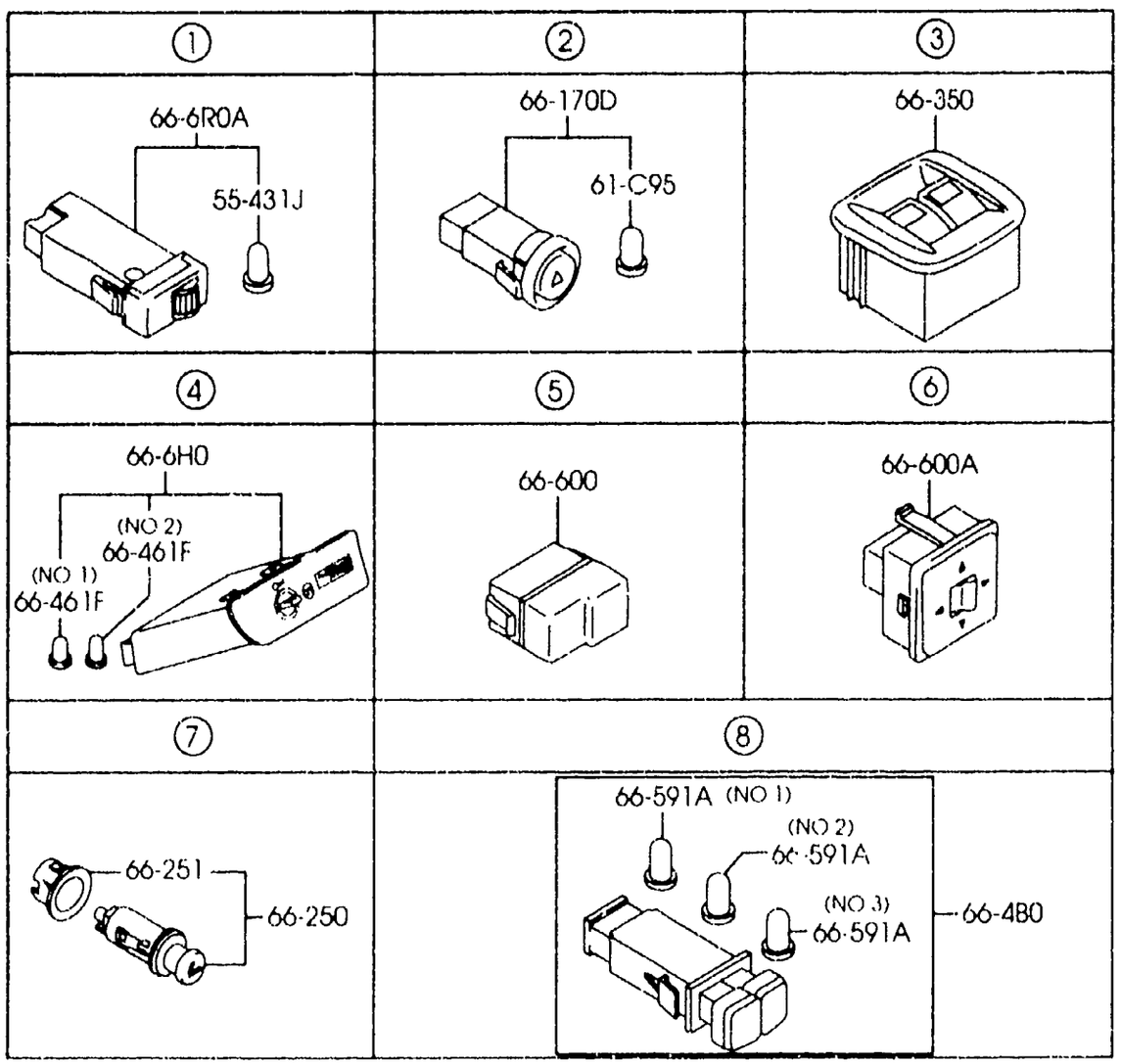

PART NO.	QTY	MODEL/RESTRICTION	MODEL/RESTRICTION	MODEL/RESTRICTION	FROM-TO
55-431J NC72-55-431	1	BULB'A',METER SET	AMPOULE'A',GROUPE COMPT.		
61-C95 B455-61-C95	1	BULB,MODE CONTROL	AMPOULE,COMMANDE DE MODE		
66-170D NC10-66-4H0	1	SWITCH,HAZARD	COMMUTATEUR,HAZARD		
66-250 F146-66-250	1	LIGHTER,CIGAR	ALLUME-CIGARE		
66-251 N066-66-251	1	RING,ILLUMINATION	ANNEAU,ECLAIRAGE TABLEAU		
66-350 NC72-66-350	1	SWITCH,POWER WINDOW	INTERR.,VITRE ELECTRIQUE		
02	INT-	NB3 NB5 NB9 BLACK	NB3 NB5 NB9 NOIR		
21	INT-	NB4 NB8 TAN	NB4 NB8 TAN		
66-4B0 NC72-66-4B0	1	SWITCH,FOG-FRONT (W/FRONT FOG LAMP+W/O AUTO CRUISE CONT.)	INTERR.,ANTIBROU.-AV.		
NC73-66-4B0	1	(W/FRONT FOG LAMP+W/AUTO CRUISE CONT.)			
66-461F NC10-66-461	1	BULB,SWITCH-HAZARD (ILLUST. NO.1)	AMPOULE,INTERRUPT-DANGER		
NC72-66-461	1	(ILLUST. NO.2)			
66-591A NC11-66-581	1	BULB (ILLUST. NO.1) (W/FRONT FOG LAMP+W/AUTO CRUISE CONT.)	AMPOULE,INT'RPT PARC LANG		
NC12-66-581	1	(ILLUST. NO.2) (W/FRONT FOG LAMP+W/AUTO CRUISE CONT.)			
NC72-66-581	2	(ILLUST. NO.3) (W/FRONT FOG LAMP+W/AUTO CRUISE CONT.)			
66-6H0		SWITCH,CUT OFF-AIR BAG	INTERRUPT.,COUPURE-S. AIR		

6610A DASHBOARD SWITCHES

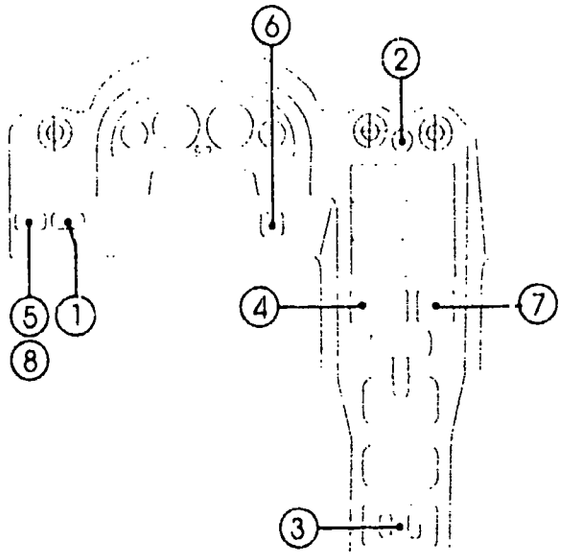

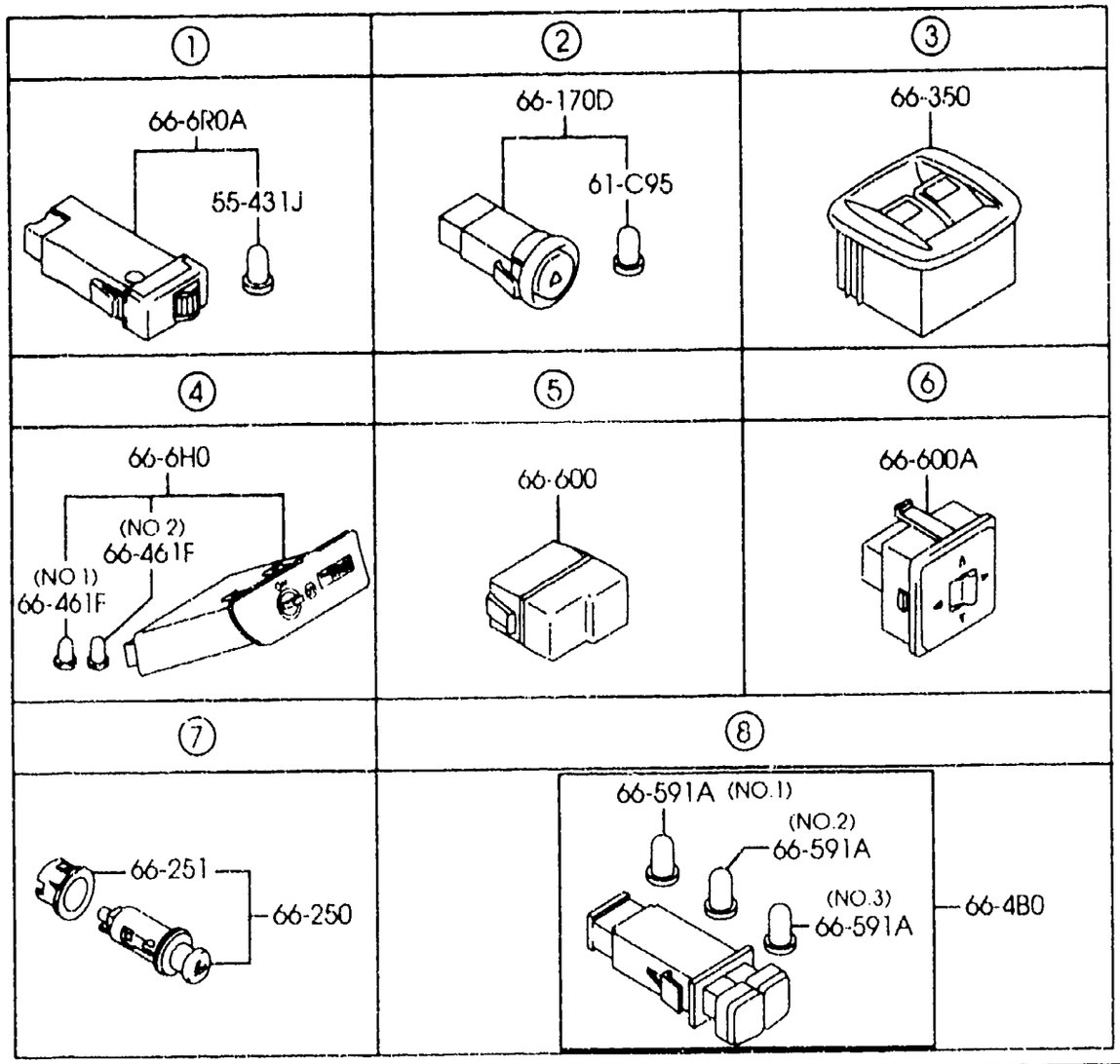

PART NO.	QTY	MODEL/RESTRICTION	MODEL/RESTRICTION	MODEL/RESTRICTION	FROM-TO
CONT'D					
NC72-66-6H0	1				
+---------+					
| 66-6R0A |		UNIT,RESISTOR	UNITE,REGISTANCE		
+---------+					
NC72-66-6R0	1				
+---------+					
| 66-600 |		COVER,HOLE	BOUCHON		
+---------+					
B481-55-225	1	(W/O FRONT FOG LAMP+ W/O AUTO CRUISE CONT .)			
+---------+					
| 66-600A |		SWITCH,RMT.MIRROR	INTERR.,		
+---------+					
GJ84-66-600A	1				

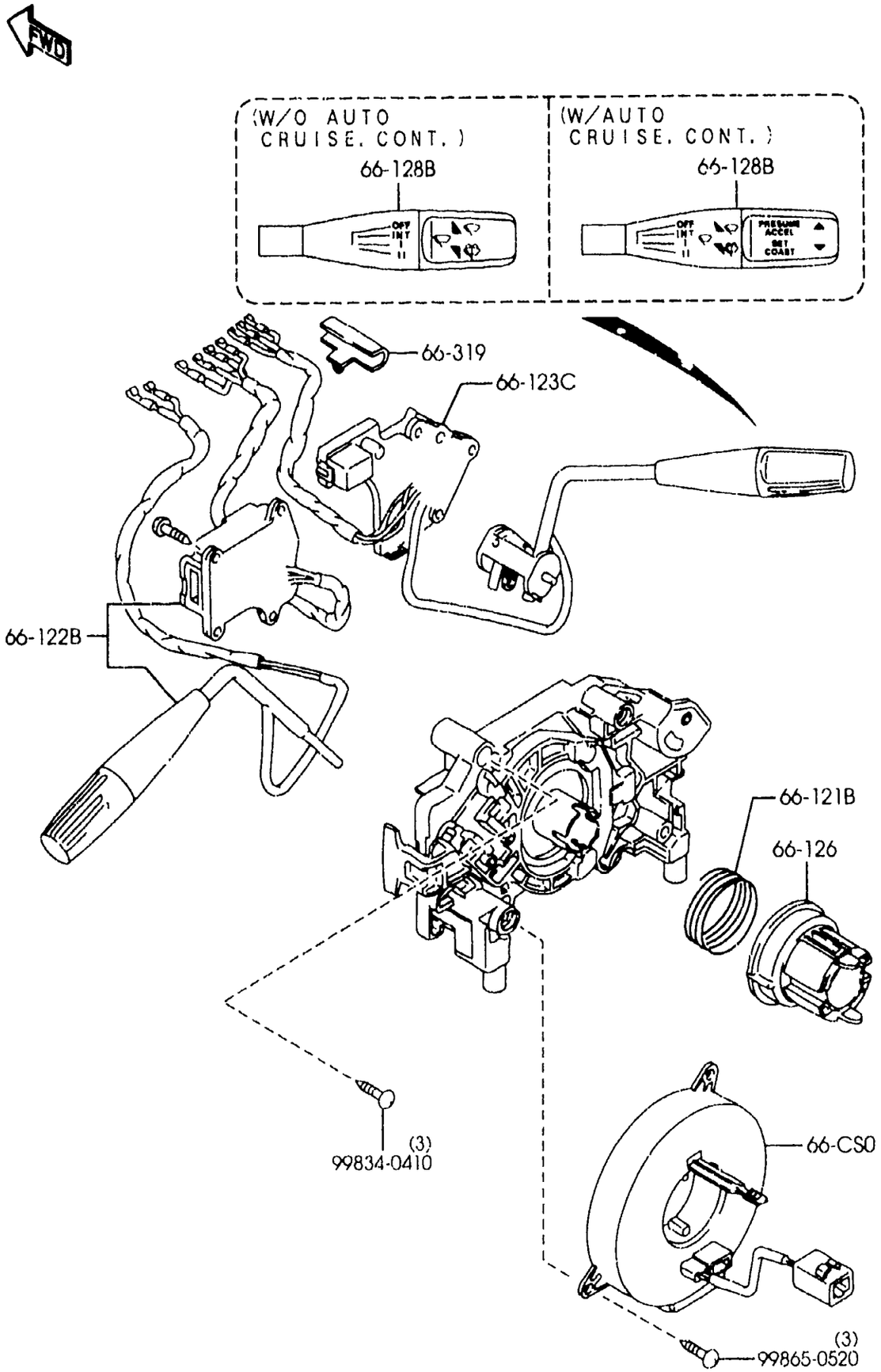

PART NO.	QTY	MODEL/RESTRICTION	MODEL/RESTRICTION	MODEL/RESTRICTION	FROM-TO
66-CS0		SPRING,CLOCK	RESSORT MONTRE		
GE8C-66-CS0A	1	TOKAI RIKA (SUPPLIER IN SELECTION)	TOKAI RIKA		
N066-66-CS0	1	ALPS (SUPPLIER IN SELECTION)	ALPS		
66-121B		SPRING,CANCEL CAM	RESSORT,CAME D'ANNULATION		
H384-66-121	1				
66-122B		SWITCH,LIGHT & TURN	INTERR.ECLAIRAGE ET CLIGNOT.		
NC11-66-122	1				
66-123C		UNIT,WIPER-COMB. SWITCH	UNITE,ESSUY.-INTERRUPT.		
NC10-66-135	1	(W/O AUTO CRUISE CONT.)			
66-126		CAM,CANCEL-COMB. SW.	CAME,ANNUL.-INTERRUPT. COMB.		
NC11-66-126	1				
66-128B		LEVER,WIPER-COMB. SWITCH	LEVIER,ESSUY.-INTERRUPT.		
NC10-66-128	1	(W/O AUTO CRUISE CONT.)			
NC11-66-128	1	(W/AUTO CRUISE CONT.)			
66-319		CLIP	ATTACHE		
NC11-66-139	1				

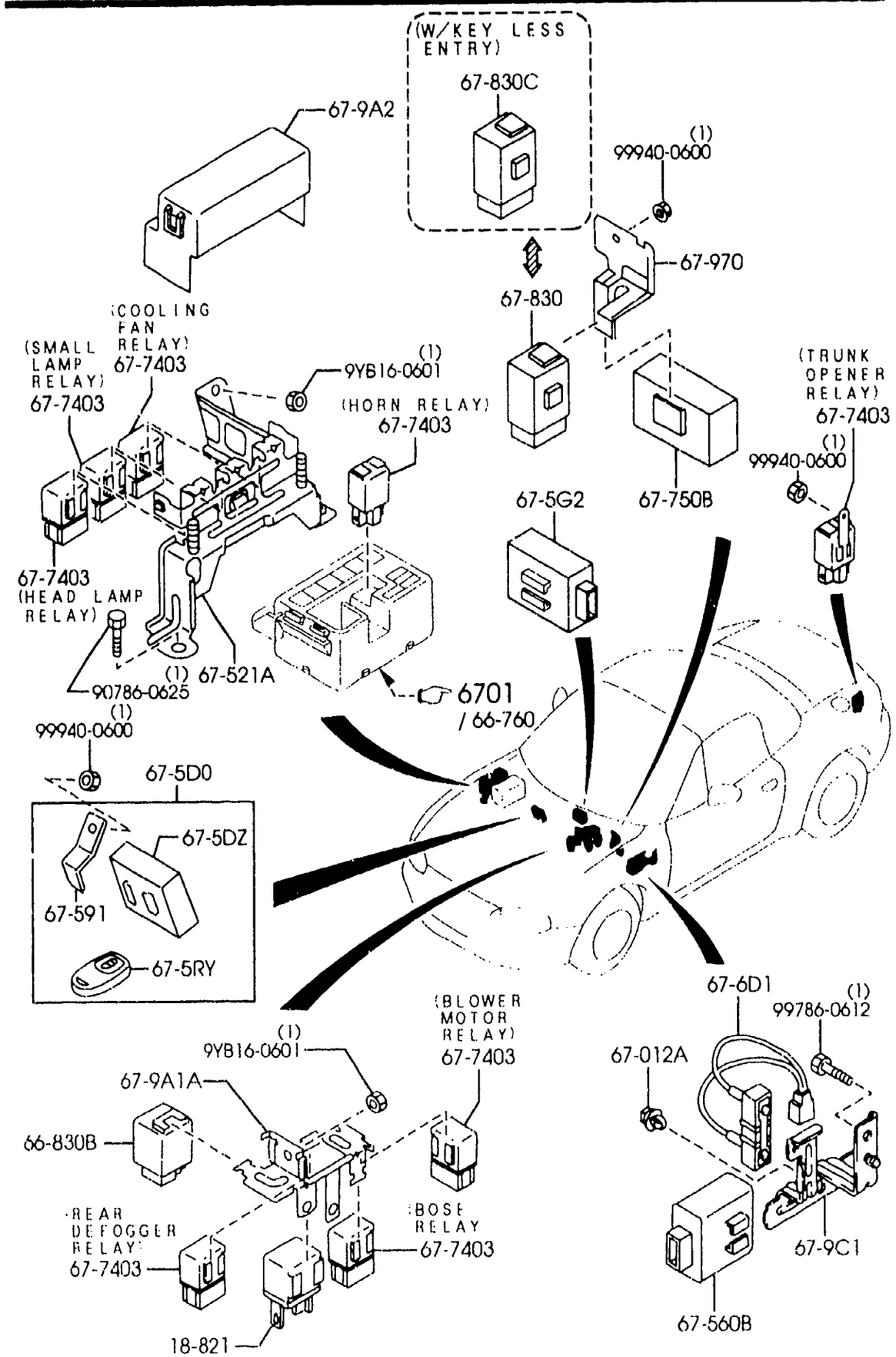

AUNA08

6630A -1 BODY RELAYS & UNIT

PART NO.	QTY	MODEL/RESTRICTION	MODEL/RESTRICTION	MODEL/RESTRICTION	FROM-TO
18-821		RELAY,FUEL PUMP	RELAIS D'OUVERTURE C IRCUIT		
B5B4-18-821	1				
66-830B		UNIT,FLASHER	CENTRALE DE CLIGNOTE MENT		
LC62-66-830	1				
67-012A		CLIP	ATTACHE		
LA31-67-C11	1	(AT)	(B.V.AUTOM)		
67-5DZ		KEYLESS ENTRY SET	JEU ENTREE SANS CLE		
TC86-67-5DZB	1	(W/KEY LESS ENTRY)			-1820
*BL8D-67-5DZ	1	(W/KEY LESS ENTRY)			1820-
67-5D0		UNIT/TRANSMITTER,KEY LESS	GROUPE/TRANSFIT,SANS -CLE		
NC72-67-5D0A	1	(W/KEY LESS ENTRY)			-0823
A (NC72-67-5D0B)					
NC72-67-5D0B	1	(W/KEY LESS ENTRY)			0823-
67-5G2		UNIT,IMMOBILIZER	UNITE,IMMOBILIZATEUR		
LC62-67-5G2A	1				-0907
A (LC62-67-5G2B)					
LC62-67-5G2B	1				0907-
67-5RY		TRANSMITTER SET,KEYL ESS	JEU TRANSMETTEUR,SAN S CLE		
TC86-67-5RYB	2	(W/KEY LESS ENTRY)			-0823
AN(TC86-67-5RYC)					
TC86-67-5RYC	2	(W/KEY LESS ENTRY)			0823-
67-521A		BRACKET	ATTACHE		
N066-67-9BYA	1				
67-560B		UNIT,CENTRAL PROCESS ING	UNITE CENTRALE DE TR AITEMENT		
NC13-67-560	1	(AT)	(B.V.AUTOM)		
67-591		BRACKET	SUPPORT		
NC72-67-5D8	1	(W/KEY LESS ENTRY)			
67-6D1		RESISTOR,INTERLOCK	RHEOSTAT,ENCLENCHEME NT		
M020-67-6D1	1	(AT)	(B.V.AUTOM)		
67-7403		RELAY,N.O.	RELAIS,N.O.		

0823 NB35**-202173
0907 NB35**-204016
1820 NB35**-221227

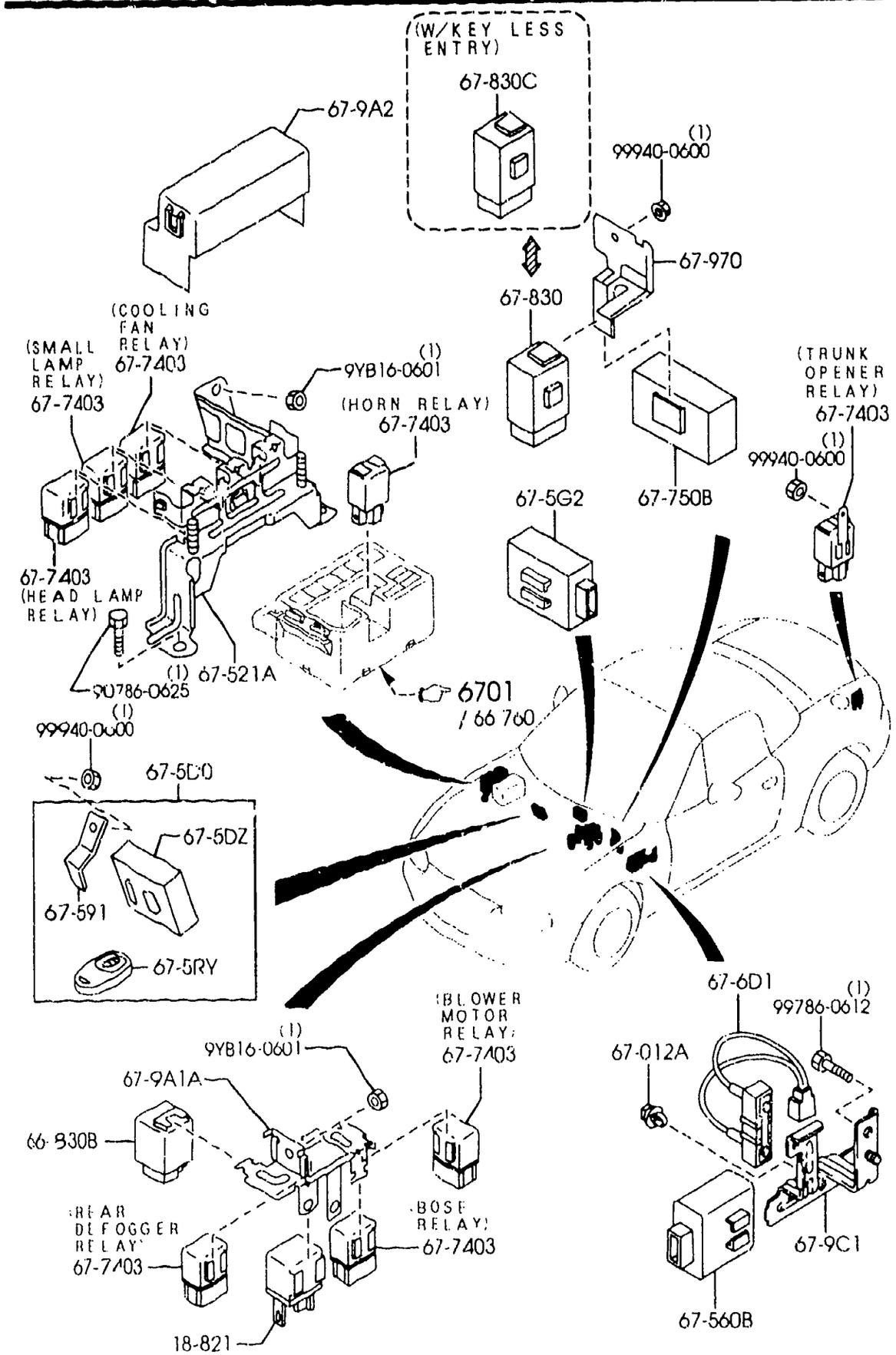

AUNA08

PART NO.	QTY	MODEL/RESTRICTION	MODEL/RESTRICTION	MODEL/RESTRICTION	FROM-TO
CONT'D					
B110-67-730	1	(TRUNK OPENER RELAY)			
		(W/KEY LESS ENTRY) ((W/O A. LOCK BRAKE) >(NOR. SUSP)) ((W/O A. LOCK BRAKE) >(HARD SUSP))	((S/SYST ANTIBLOC)>(SUSP.NRML)) ((S/SYST ANTIBLOC)>(SUSP.FERM))		
B110-67-730	2	(TRUNK OPENER RELAY)			
		(A.B.S.RELAY) (W/KEY LESS ENTRY) ((W/O A. LOCK BRAKE) >(SPORT SUSP)) (W/A. LOCK BRAKE)	((S/SYST ANTIBLOC)>(SUSP. SPORTIVE)) (SYST ANTIBLOC)		
B150-67-730	6	(REAR DEFOGGER RELAY) (BLOWER MOTOR RELAY)			
		(BOSE RELAY) (COOLING FAN RELAY) (HEAD LAMP RELAY) (SMALL LAMP RELAY)			
LA10-67-740	1	10A (HORN RELAY)	10A		
+---------+ | 67-750B | +---------+		UNIT,CONT.-RUNNING L AMP	GROUPE,CONTROLE-LA. COUR.		
NC72-67-750	1	(W/RUNNING LAMP)			
+---------+ | 67-830 | +---------+		UNIT,DOOR LOCK & TIM ER	UNITE,VERROU PORTE & MIN.		
BG1P-67-830	1	(W/O KEY LESS ENTRY+ W/POWER DOOR LOCK)			
+---------+ | 67-830C | +---------+		RELAY	RELAIS		
BJ0G-67-830	1	(W/KEY LESS ENTRY+W/ POWER DOOR LOCK)			
+---------+ | 67-9A1A | +---------+		BRACKET,RELAY	SUPPORT,RELAIS		
N066-67-9AY	1				
+---------+ | 67-9A2 | +---------+		COVER,RELAY	COUVERCLE,RELAIS		
NC10-67-9A2	1				
+---------+ | 67-9C1 | +---------+		BRACKET,RELAY	SUPPOT,RELAIS		
NC13-67-9C1	1	(AT)	(B.V.AUTOM)		
+---------+ | 67-970 | +---------+		BRACKET,RELAY	SUPPORT DE RELAIS		
NC73-67-9D0	1	(W/O KEY LESS ENTRY+ W/O RUNNING LAMP+W/P OWER DOOR LOCK)			
NC74-67-9D0A	1	(W/KEY LESS ENTRY+W/			

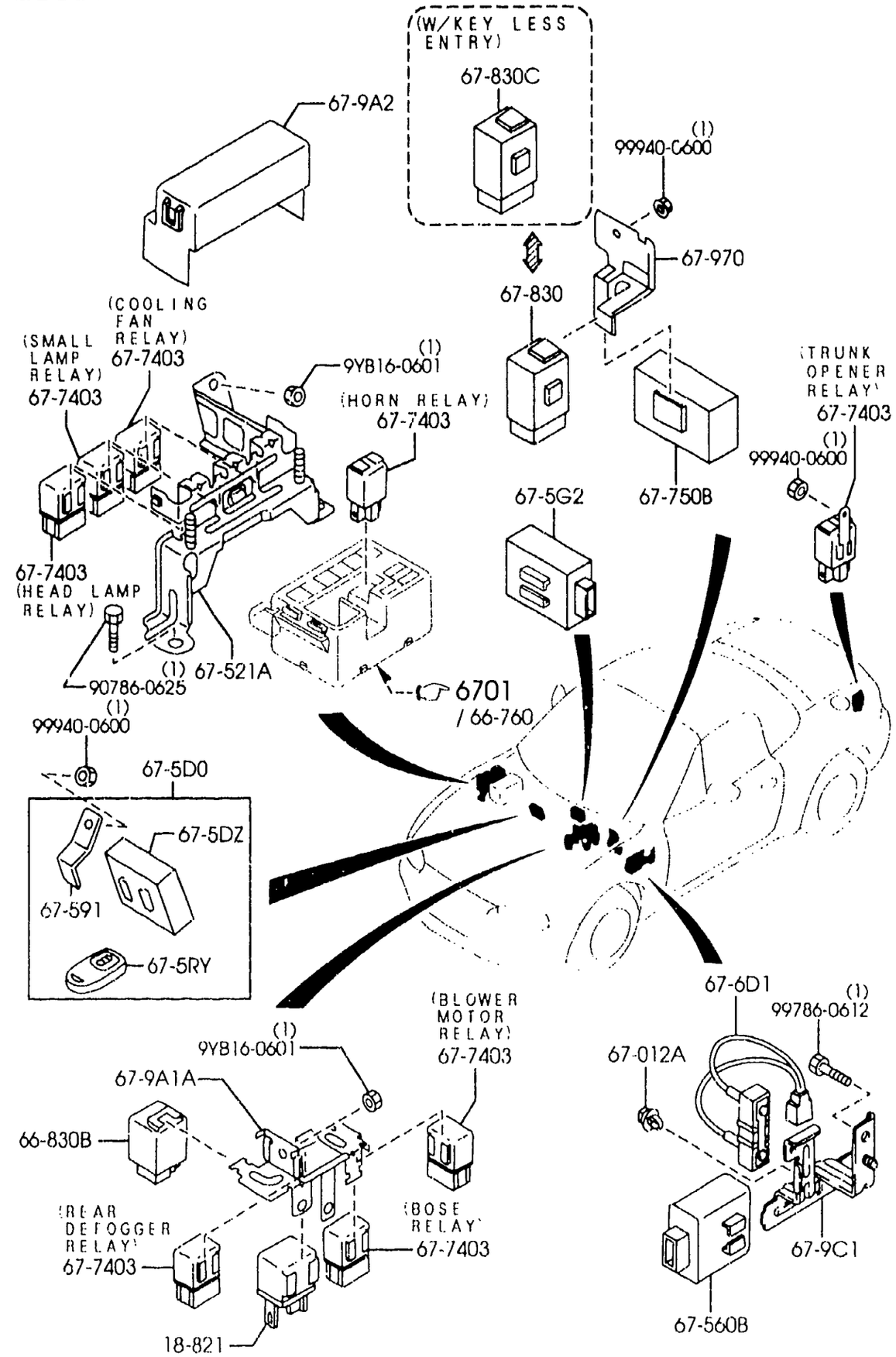

AUNA08

6630A -3 * BODY RELAYS & UNIT

PART NO.	QTY	MODEL/RESTRICTION	MODEL/RESTRICTION	MODEL/RESTRICTION	FROM-TO
CONT'D					
		O RUNNING LAMP+W/POWER DOOR LOCK)			
NC75-67-9D0	1	(W/O KEY LESS ENTRY+W/RUNNING LAMP+W/POWER DOOR LOCK)			
NC76-67-9D0A	1	(W/KEY LESS ENTRY+W/RUNNING LAMP+W/POWER DOOR LOCK)			
NC77-67-9D0	1	(W/O KEY LESS ENTRY+W/RUNNING LAMP+W/O POWER DOOR LOCK)			

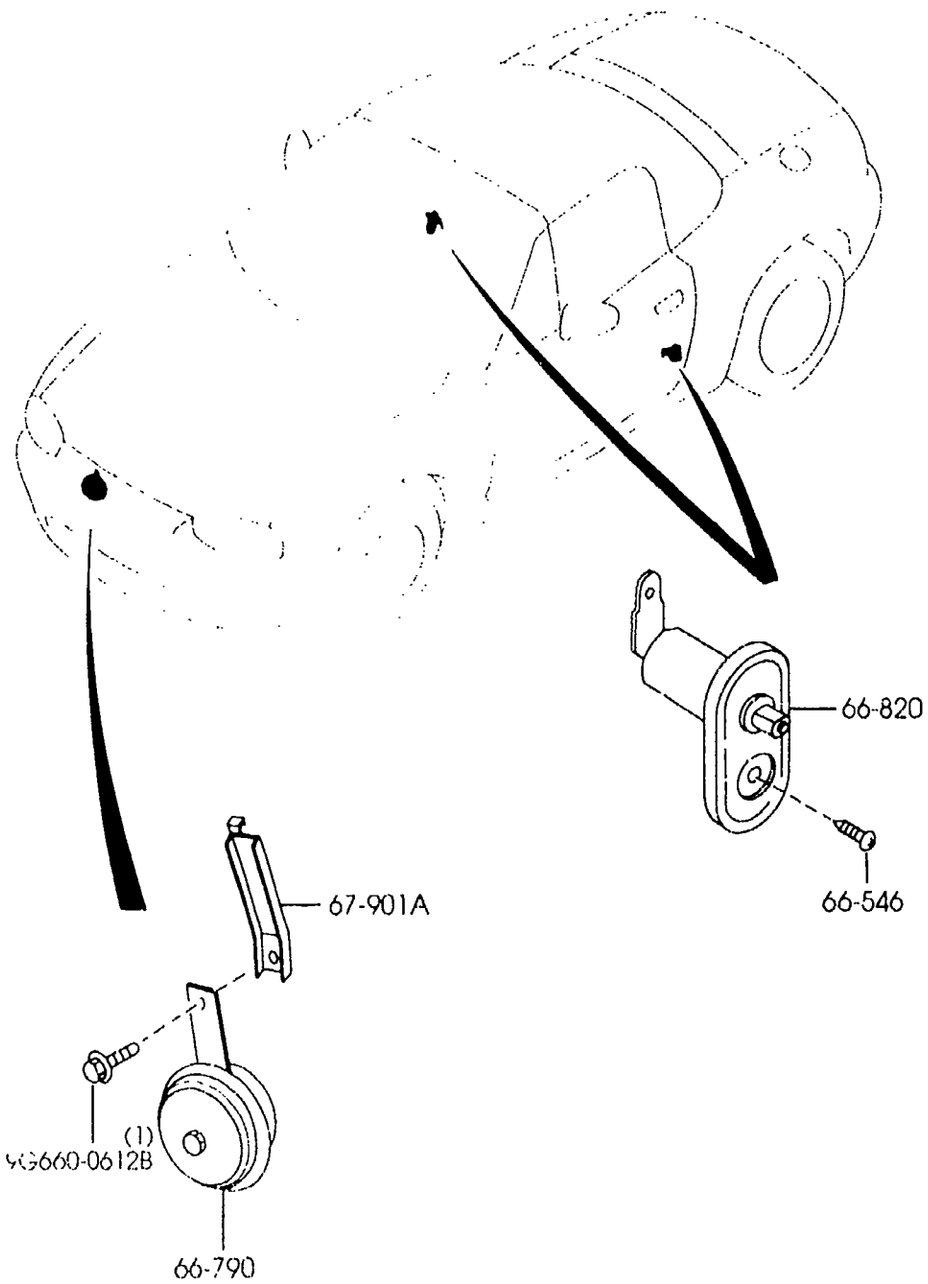

6635A -1 * DOOR SWITCH & HORNS

PART NO.	QTY	MODEL/RESTRICTION	MODEL/RESTRICTION	MODEL/RESTRICTION	FROM-TO
66-546 LA01-66-546	2	SCREW,DOOR SWITCH	UIS,COMMUT. COMM. PORTE.		
66-790 BG3F-66-790	1	HORN,LOW TONE	KLAXON,GRAVE		
66-820 S09A-66-540	2	SWITCH,DOOR	RUPTEUR, PORTE		
67-901A NC10-66-7B1	1	BRACKET,HORN	SUPPORT,AVERTISSEUR		

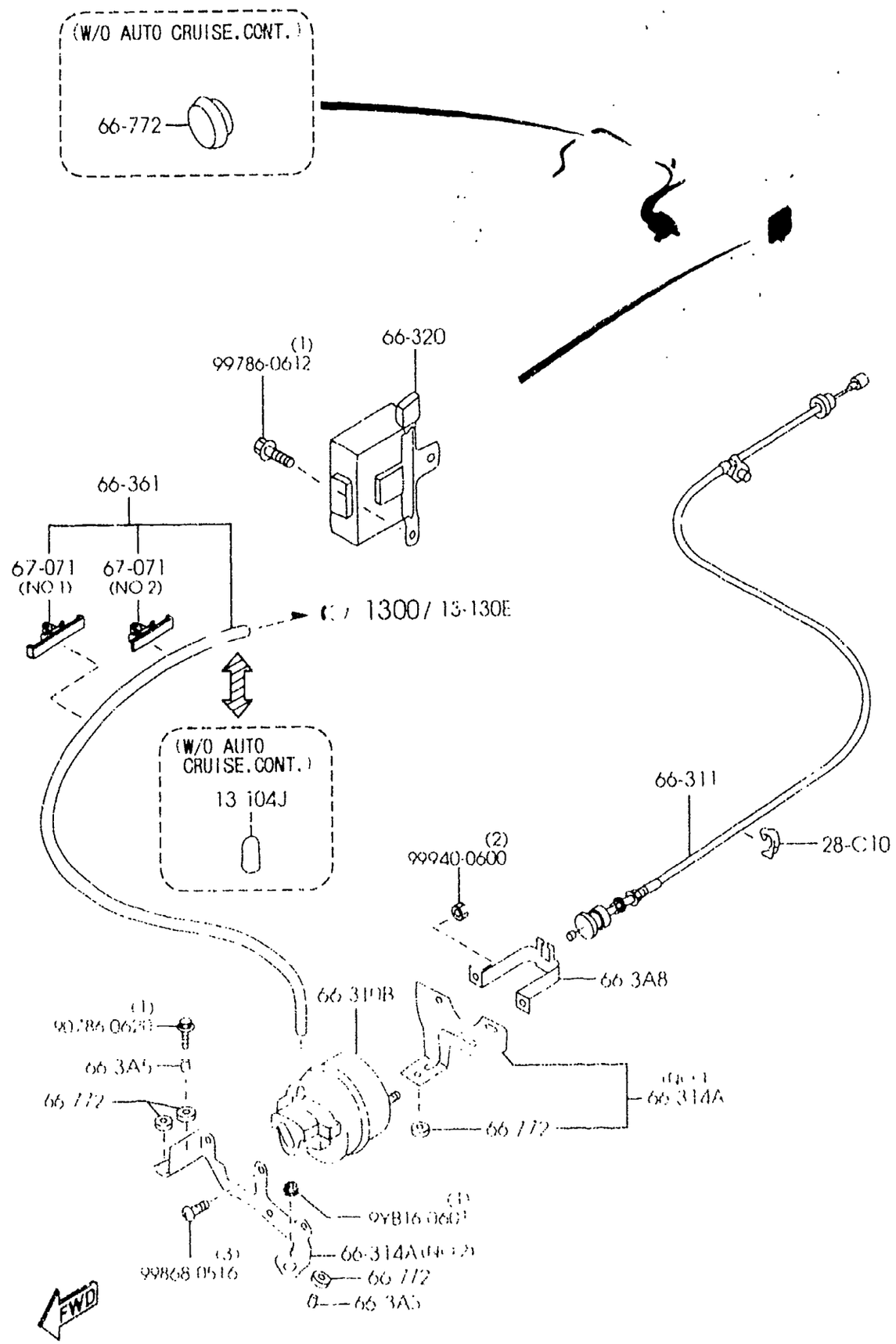

PART NO.	QTY	MODEL/RESTRICTION	MODEL/RESTRICTION	MODEL/RESTRICTION	FROM-TO
13-104J 1010-13-104	1	CAP,BLIND (W/O AUTO CRUISE CONT.)	BOUCHON		
28-C10 JE48-18-868	3	BAND,PIPE (W/AUTO CRUISE CONT.)	BANDE,TUYAU		
66-3A5 UE54-66-3A5	2	SPACER,ACTUATOR (W/AUTO CRUISE CONT.)	ENTRETOISE,ACTUATOR		
66-3A8 LC62-66-3A8	1	HOLDER,WIRE-ACTUATER	ETRIER,CABLE-ACTUATOR		
66-310B LA01-66-310A	1	ACTUATOR,A.C.C. (W/AUTO CRUISE CONT.)	COMMANDE		
66-311 NC72-66-311	1	WIRE,A.C.C. (W/AUTO CRUISE CONT.)	FIL,		
66-314A NC72-66-3AXA	1	BRACKET,A.C.C. (ILLUST. NO.1) (W/AUTO CRUISE CONT.)	SUPPORT		
NC72-66-3AY	1	(ILLUST. NO.2) (W/AUTO CRUISE CONT.)			
66-320 NC72-66-320	1	BOX,A.C.C. (W/AUTO CRUISE CONT.)	BOITE		
66-361 NC72-66-360A	1	PIPE,AUTO CRUISE CONTROL (W/AUTO CRUISE CONT.)	TUYAU,REGLAGE AUTO-VOYAGE		
66-772 B092-41-661	1	GROMMET (W/O AUTO CRUISE CONT.)	COUVERCLE		
UE54-66-3A4	4	(W/AUTO CRUISE CONT.)			

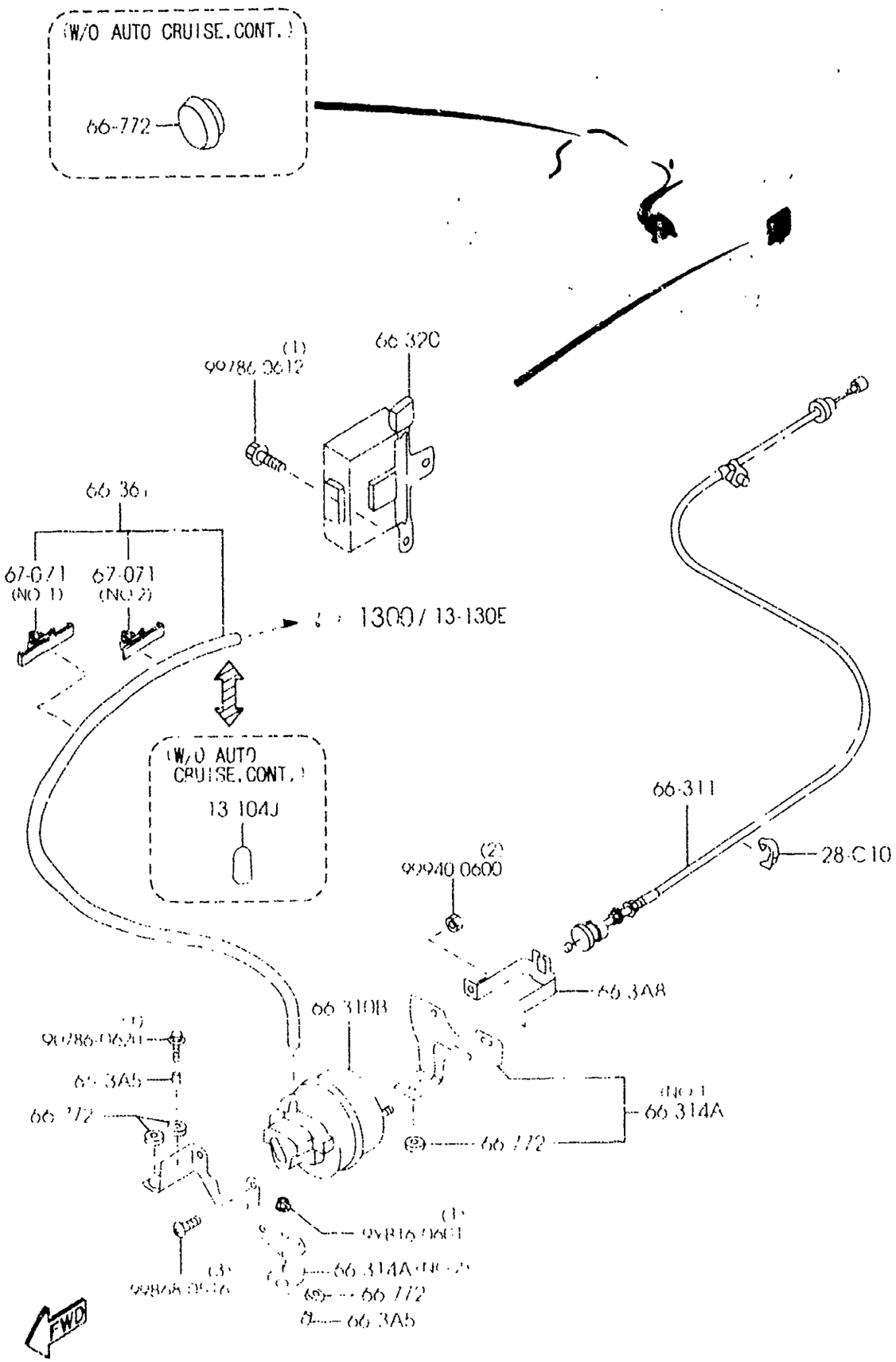

PART NO.	QTY	MODEL/RESTRICTION	MODEL/RESTRICTION	MODEL/RESTRICTION	FROM-TO
67-071		CLIP	CLIP		
B111-67-C99	1	(ILLUST. NO.1) (W/AUTO CRUISE CONT.)			
B211-67-C99	1	(ILLUST. NO.2) (W/AUTO CRUISE CONT.)			

((HARD SUSP)>(W/A.LOCK BRAKE))
(SPORT SUSP)

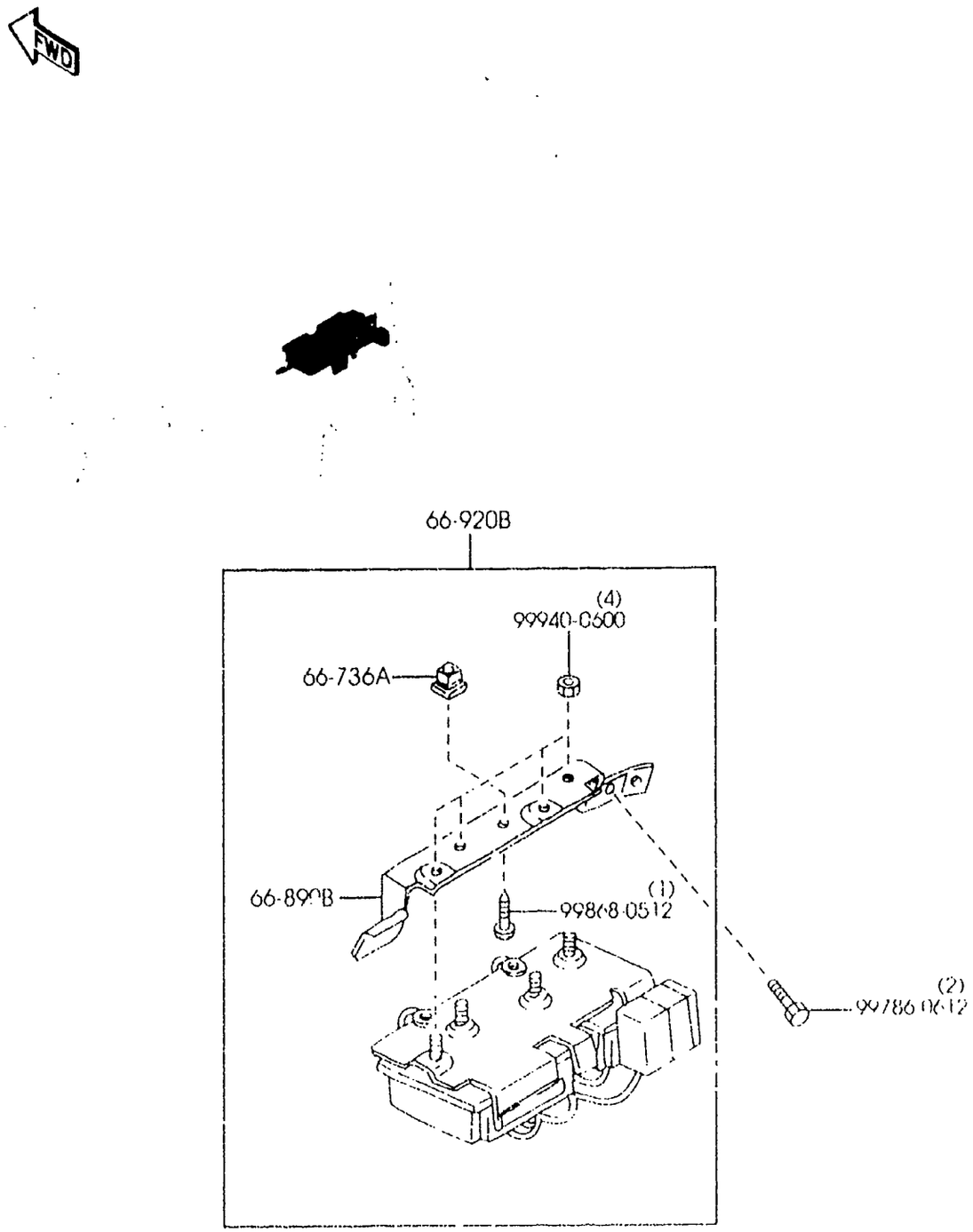

((HARD SUSP)>(W/O A.LOCK BRAKE))
(NOR. SUSP)
(W/O AUTO CHANGER)

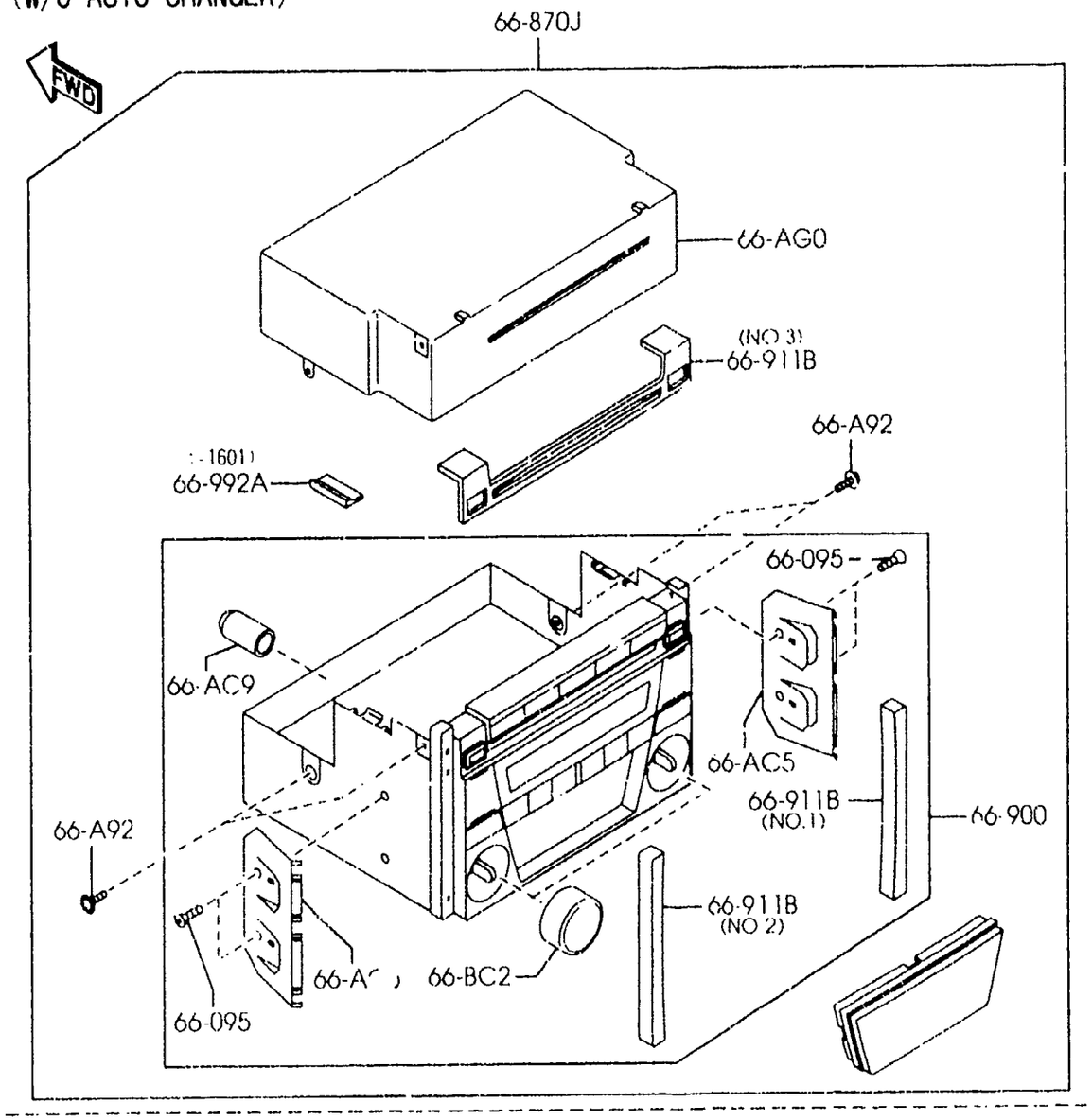

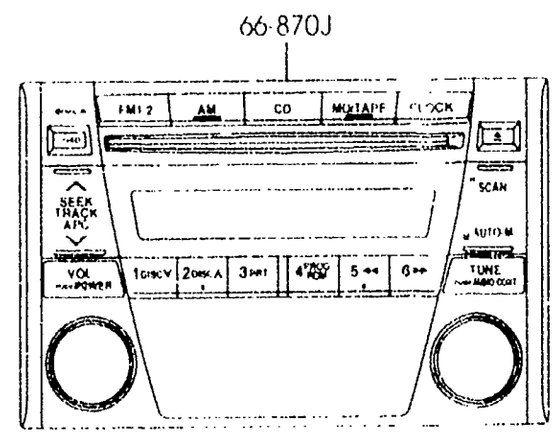

((HARD SUSP)>(W/A.LOCK BRAKE))
(SPORT SUSP)
(-1701)

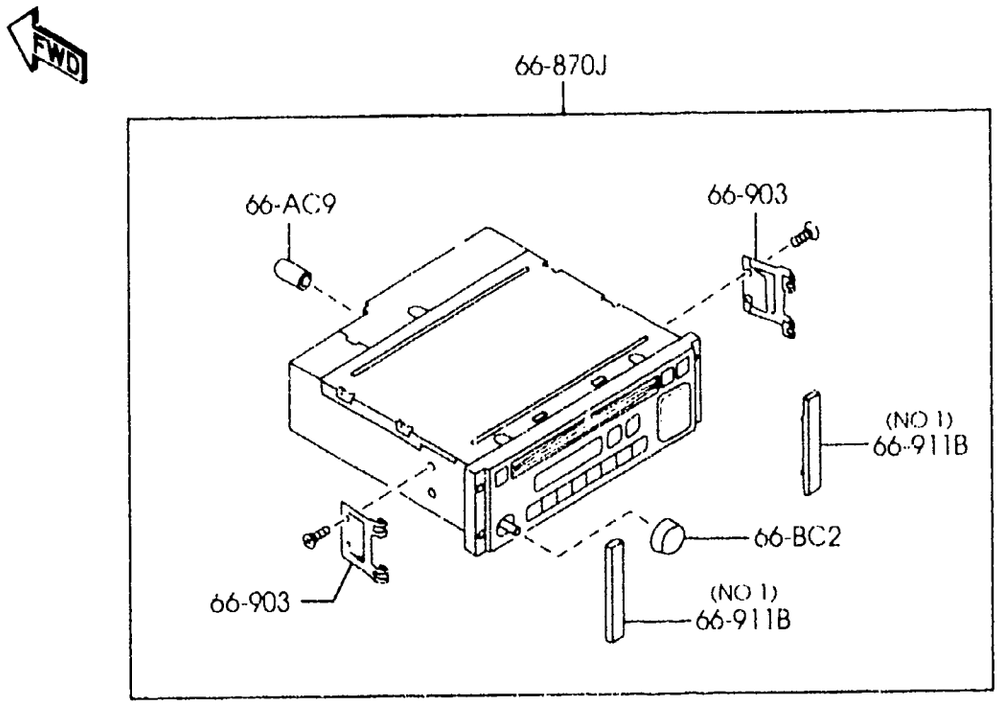

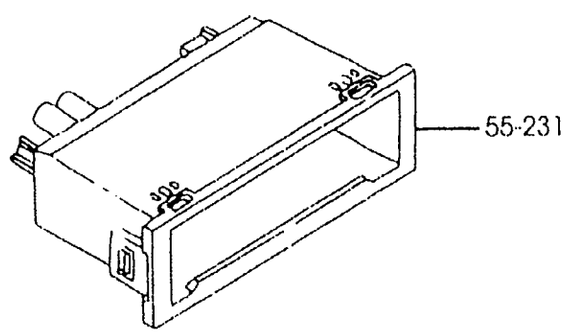

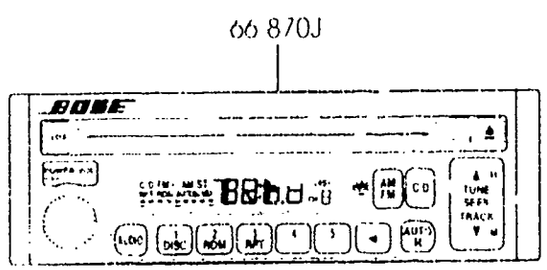

((HARD SUSP)>(W/A.LOCK BRAKE))
(SPORT SUSP)
(10/200KHZ,W/POWER AMP,W/O CD AUTO CHANGER)
(1701-)

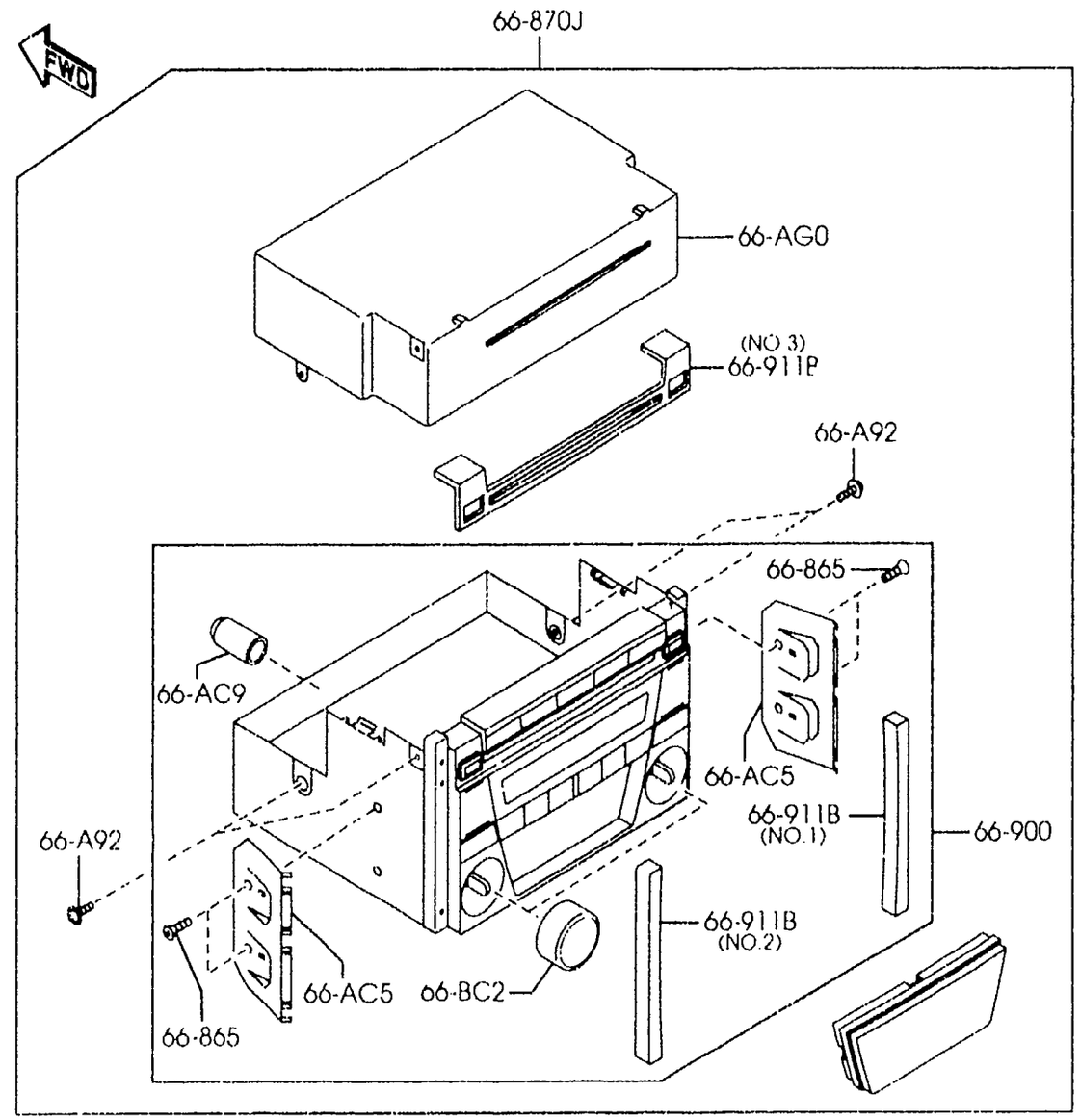

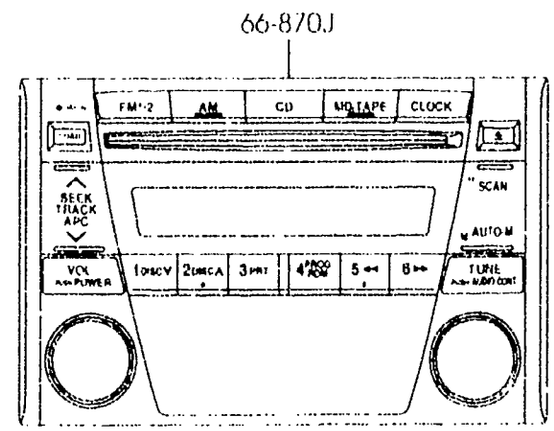

((HARD SUSP)>(W/A.LOCK BRAKE))
(SPORT SUSP)
(10/200KHZ,W/POWER AMP,W/CD AUTO CHANGER)

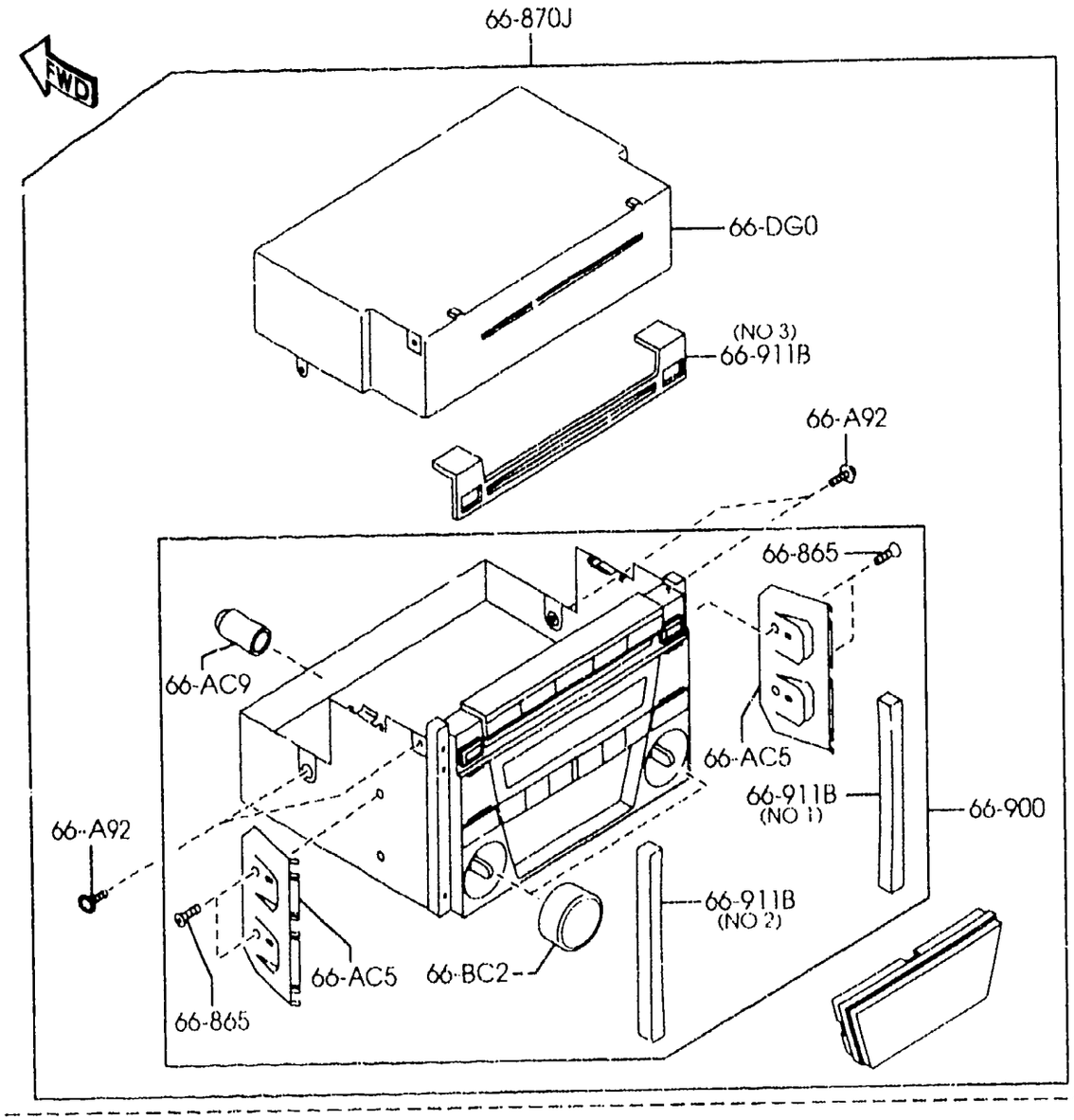

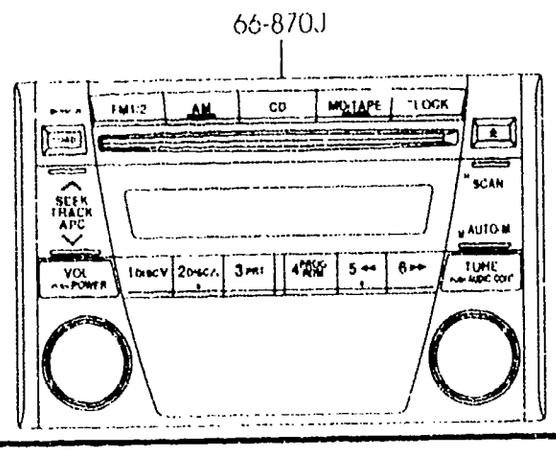

((HARD SUSP)>(W/A.LOCK BRAKE))
(SPORT SUSP)

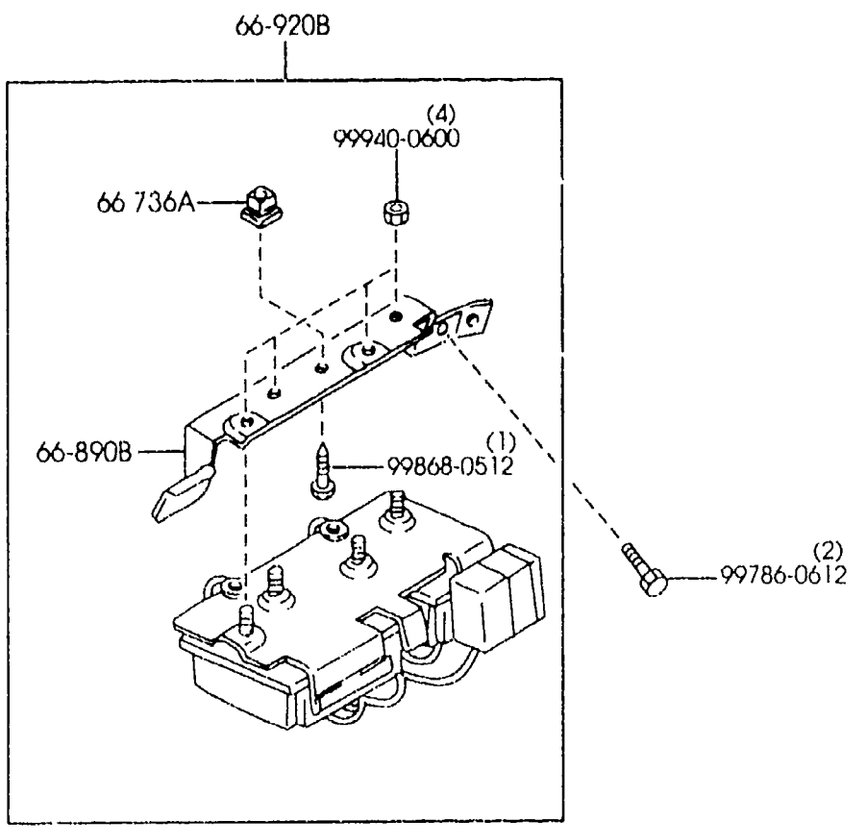

PART NO.	QTY	MODEL/RESTRICTION	MODEL/RESTRICTION	MODEL/RESTRICTION	FROM-TO
55-231		ORNAMENT,STEREO	SIGLE,STEREO		
B02A-66-9M0A	1	((HARD SUSP)>(W/A. LOCK BRAKE)) (SPORT SUSP)	((SUSP.FERM)>(SYST ANTIBLOC)) (SUSP. SPORTIVE)		-1701
66-AC5		SPRING,AUDIO	RESSORT,AUDIO		
TC86-66-AC5	2	((HARD SUSP)>(W/O A. LOCK BRAKE)) (NOR. SUSP)	((SUSP.FERM)>(S/SYST ANTIBLOC)) (SUSP.NRML)		
B30E-66-AC5	2	((HARD SUSP)>(W/A. LOCK BRAKE)) (SPORT SUSP)	((SUSP.FERM)>(SYST ANTIBLOC)) (SUSP. SPORTIVE)		1701-
66-AC9		RUBBER,REAR-ET/ED COMBI.	CAOUTCHOUC.ARRIERE		
TC86-66-AC9	1	((HARD SUSP)>(W/O A. LOCK BRAKE)) (NOR. SUSP)	((SUSP.FERM)>(S/SYST ANTIBLOC)) (SUSP.NRML)		
S22K-66-AC9	1	MATSUSHITA MAKE ((HARD SUSP)>(W/A. LOCK BRAKE)) (SPORT SUSP)	MATSUSHITA MAKE ((SUSP.FERM)>(SYST ANTIBLOC)) (SUSP. SPORTIVE)		-1701
B30E-66-AC9	1	((HARD SUSP)>(W/A. LOCK BRAKE)) (SPORT SUSP)	((SUSP.FERM)>(SYST ANTIBLOC)) (SUSP. SPORTIVE)		1701-
66-AG0		PLAYER,COMPACT DISC	JOUEUR,DISQUE COMPACT.		
B30K-66-AG0 A (B30K-66-AG0A)	1	(10/200KHZ,W/POWER AMP,W/O CD AUTO CHANGER)			1701-1709
B30K-66-AG0A	1	(10/200KHZ,W/POWER AMP,W/O CD AUTO CHANGER)			1709-
66-A92		SCREW,ANTENNA	VIS,ANTENNE		
T060-66-A92	4	((HARD SUSP)>(W/O A. LOCK BRAKE)) (NOR. SUSP)	((SUSP.FERM)>(S/SYST ANTIBLOC)) (SUSP.NRML)		
T060-66-A92	4	((HARD SUSP)>(W/A. LOCK BRAKE)) (SPORT SUSP)	((SUSP.FERM)>(SYST ANTIBLOC)) (SUSP. SPORTIVE)		1701-
66-BC2		KNOB,VOLUME-TUNER & DECK	BOUTON,VOLUME-D. ACC.& RG		
N068-66-BC1	2	((HARD SUSP)>(W/O A. LOCK BRAKE)) (NOR. SUSP)	((SUSP.FERM)>(S/SYST ANTIBLOC)) (SUSP.NRML)		
RG1S-66-BC1	1	MATSUSHITA MAKE ((HARD SUSP)>(W/A. LOCK BRAKE)) (SPORT SUSP)	MATSUSHITA MAKE ((SUSP.FERM)>(SYST ANTIBLOC)) (SUSP. SPORTIVE)		-1701
N071-66-BC1	2	((HARD SUSP)>(W/A. L	((SUSP.FERM)>(SYST A		1701-

1701 NB35**-219555
1709 NB35**-219852

((HARD SUSP)>(W/O A.LOCK BRAKE))
(NOR. SUSP)
(W/O AUTO CHANGER)

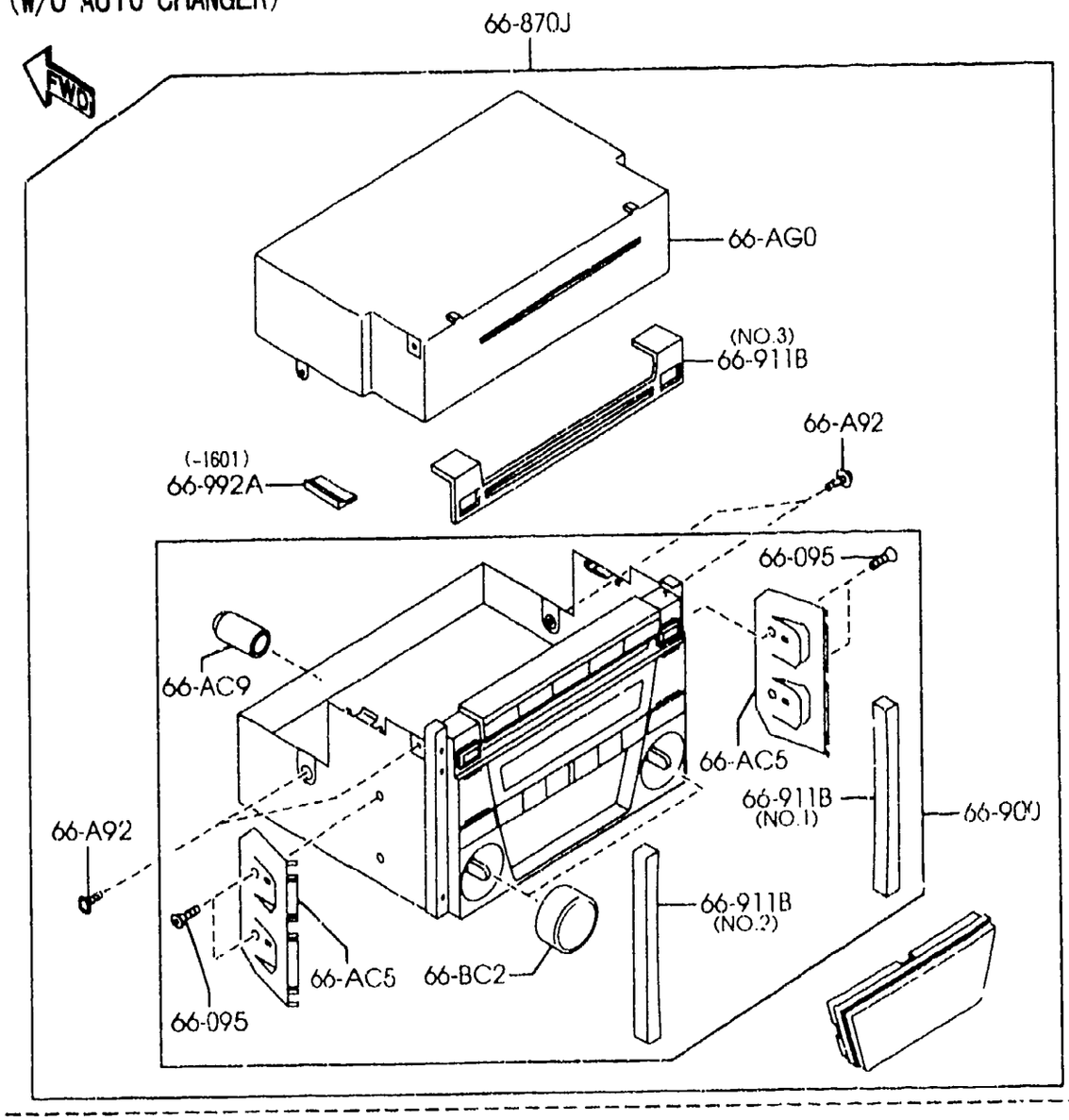

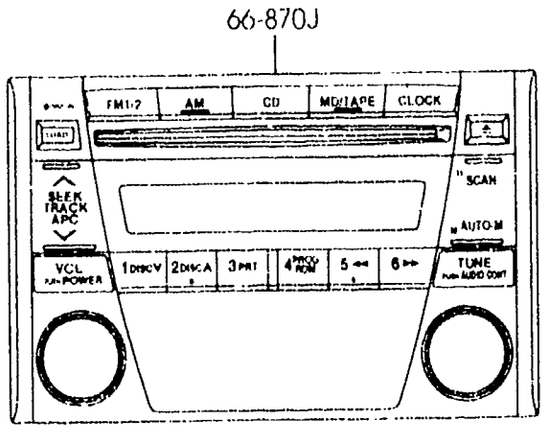

PART NO.	QTY	MODEL/RESTRICTION	MODEL/RESTRICTION	MODEL/RESTRICTION	FROM-TO
CONT'D					
		OCK BRAKE)) (SPORT SUSP)	NTIBLOC)) (SUSP. SPORTIVE)		
+---------+ | 66-DG0 | +---------+		CHANGER,COMPACT DISC	CHANGEUR,DISQUE COMP ACT		
TC87-66-EG0	1	(10/200KHZ,W/POWER A MP,W/CD AUT O CHANGE R) ((HARD SUSP)>(W/A. L OCK BRAKE)) (SPORT SUSP)	((SUSP.FERM)>(SYST A NTIBLOC)) (SUSP. SPORTIVE)		
+---------+ | 66-095 | +---------+		SCREW	VIS		
TC86-66-B31	4	((HARD SUSP)>(W/O A. LOCK BRAKE)) (NOR. SUSP)	((SUSP.FERM)>(S/SYST ANTIBLOC)) (SUSP.NRML)		
+---------+ | 66-736A | +---------+		GROMMET,SCREW	PROTECTEUR, VIS		
NC10-66-AD5	1	((HARD SUSP)>(W/A. L OCK BRAKE)) (SPORT SUSP)	((SUSP.FERM)>(SYST A NTIBLOC)) (SUSP. SPORTIVE)		
+---------+ | 66-B65 | +---------+		SCREW	VIS		
T060-66-B31	4	((HARD SUSP)>(W/A. L OCK BRAKE)) (SPORT SUSP)	((SUSP.FERM)>(SYST A NTIBLOC)) (SUSP. SPORTIVE)		1701-
+---------+ | 66-B70J | +---------+		AUDIO SET	AUDIO-KIT		
NC77-66-9RX	1	(10/200KHZ,W/POWER A MP,W/CD AUT O CHANGE R) ((HARD SUSP)>(W/A. L OCK BRAKE)) (SPORT SUSP)	((SUSP.FERM)>(SYST A NTIBLOC)) (SUSP. SPORTIVE)		
NC72-66-9R0	1	((HARD SUSP)>(W/O A. LOCK BRAKE)) (NOR. SUSP)	((SUSP.FERM)>(S/SYST ANTIBLOC)) (SUSP.NRML)		
NC75-66-9R0	1	((HARD SUSP)>(W/A. L OCK BRAKE)) (SPORT SUSP)	((SUSP.FERM)>(SYST A NTIBLOC)) (SUSP. SPORTIVE)		-1701
ND22-66-9R0	1	(10/200KHZ,W/POWER A MP,W/O CD A UTO CHAN GER) ((HARD SUSP)>(W/A. L OCK BRAKE)) (SPORT SUSP)	((SUSP.FERM)>(SYST A NTIBLOC)) (SUSP. SPORTIVE)		1701-
+---------+ | 66-B90B | +---------+		BRACKET	SUPPORT		
NC10-66-9B1	1	((HARD SUSP)>(W/A. L OCK BRAKE)) (SPORT SUSP)	((SUSP.FERM)>(SYST A NTIBLOC)) (SUSP. SPORTIVE)		

1701 NB35**-219555

((HARD SUSP)>(W/A.LOCK BRAKE))
(SPORT SUSP)
(-1701)

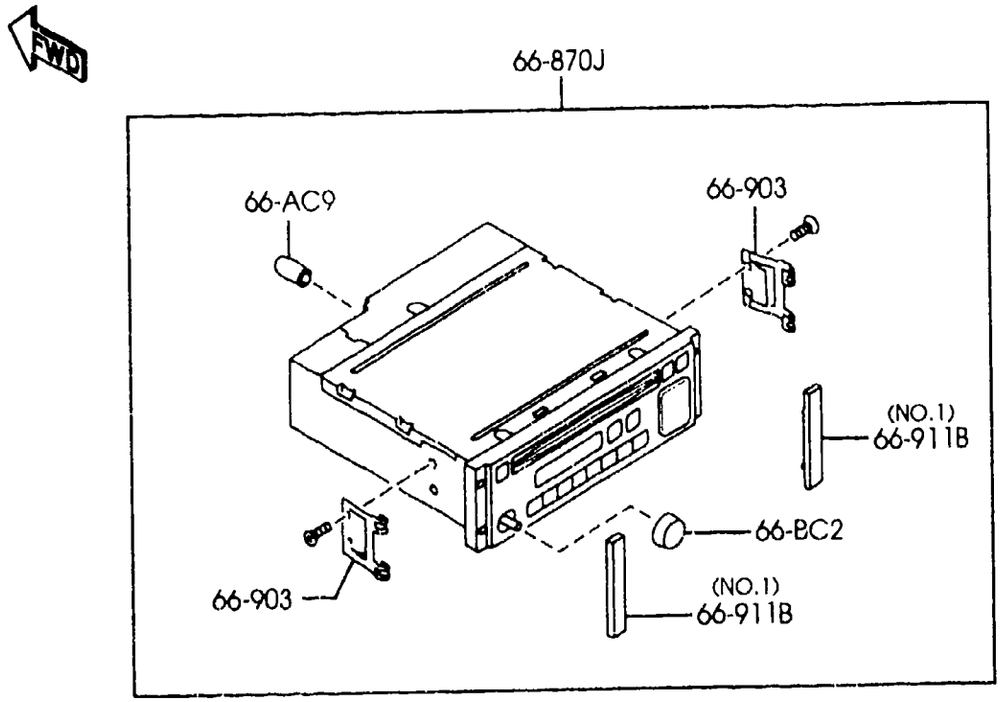

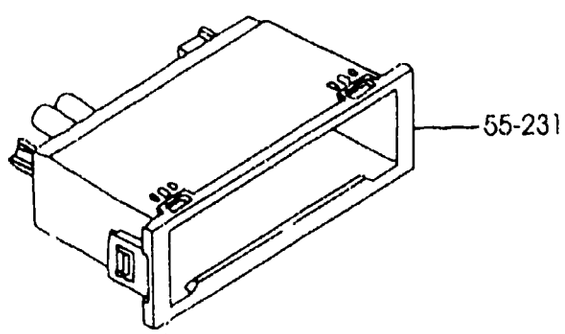

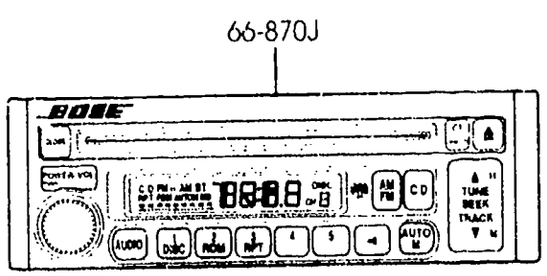

PART NO.	QTY	MODEL/RESTRICTION	MODEL/RESTRICTION	MODEL/RESTRICTION	FROM-TO
+---------+ | 66-900 | +---------+		TUNER	TUNER		
NC72-66-AS0	1	((HARD SUSP)>(W/O A. LOCK BRAKE)) (NOR. SUSP)	((SUSP.FERM)>(S/SYST ANTIBLOC)) (SUSP.NRML)		
ND22-66-AS0	1	((HARD SUSP)>(W/A. LOCK BRAKE)) (SPORT SUSP)	((SUSP.FERM)>(SYST ANTIBLOC)) (SUSP. SPORTIVE)		1701-
+---------+ | 66-903 | +---------+		BRACKET,TUNER	ATTACHE, TUNER		
FD04-66-AW1	2	PANASONIC ((HARD SUSP)>(W/A. LOCK BRAKE)) (SPORT SUSP)	PANASONIC ((SUSP.FERM)>(SYST ANTIBLOC)) (SUSP. SPORTIVE)		-1701
+---------+ | 66-911B | +---------+		COVER,HOLE	BOUCHON		
TC86-66-BC4	1	(ILLUST. NO.1) ((HARD SUSP)>(W/O A. LOCK BRAKE)) (NOR. SUSP)	((SUSP.FERM)>(S/SYST ANTIBLOC)) (SUSP.NRML)		
TC87-66-BC4	1	(ILLUST. NO.2) ((HARD SUSP)>(W/O A. LOCK BRAKE)) (NOR. SUSP)	((SUSP.FERM)>(S/SYST ANTIBLOC)) (SUSP.NRML)		
TC87-66-BG4	1	(ILLUST. NO.3) (10/200KHZ,W/POWER AMP,W/CD AUTO CHANGER) ((HARD SUSP)>(W/A. LOCK BRAKE)) (SPORT SUSP)	((SUSP.FERM)>(SYST ANTIBLOC)) (SUSP. SPORTIVE)		
T060-66-BG4	1	(ILLUST. NO.3) ((HARD SUSP)>(W/O A. LOCK BRAKE)) (NOR. SUSP)	((SUSP.FERM)>(S/SYST ANTIBLOC)) (SUSP.NRML)		
NB40-66-BC4	2	PANASONIC (ILLUST. NO.1) ((HARD SUSP)>(W/A. LOCK BRAKE)) (SPORT SUSP)	PANASONIC ((SUSP.FERM)>(SYST ANTIBLOC)) (SUSP. SPORTIVE)		-1701
E116-66-BC4	1	(ILLUST. NO.1) ((HARD SUSP)>(W/A. LOCK BRAKE)) (SPORT SUSP)	((SUSP.FERM)>(SYST ANTIBLOC)) (SUSP. SPORTIVE)		1701-
E117-66-BC4	1	(ILLUST. NO.2) ((HARD SUSP)>(W/A. LOCK BRAKE)) (SPORT SUSP)	((SUSP.FERM)>(SYST ANTIBLOC)) (SUSP. SPORTIVE)		1701-
T060-66-BG4	1	(ILLUST. NO.3) (10/200KHZ,W/POWER AMP,W/O CD AUTO CHANGER) ((HARD SUSP)>(W/A. LOCK BRAKE)) (SPORT SUSP)	((SUSP.FERM)>(SYST ANTIBLOC)) (SUSP. SPORTIVE)		1701-

1701 NB35**-219555

((HARD SUSP)>(W/A.LOCK BRAKE))
(SPORT SUSP)
(10/200KHZ,W/POWER AMP,W/O CD AUTO CHANGER)
(1701-)

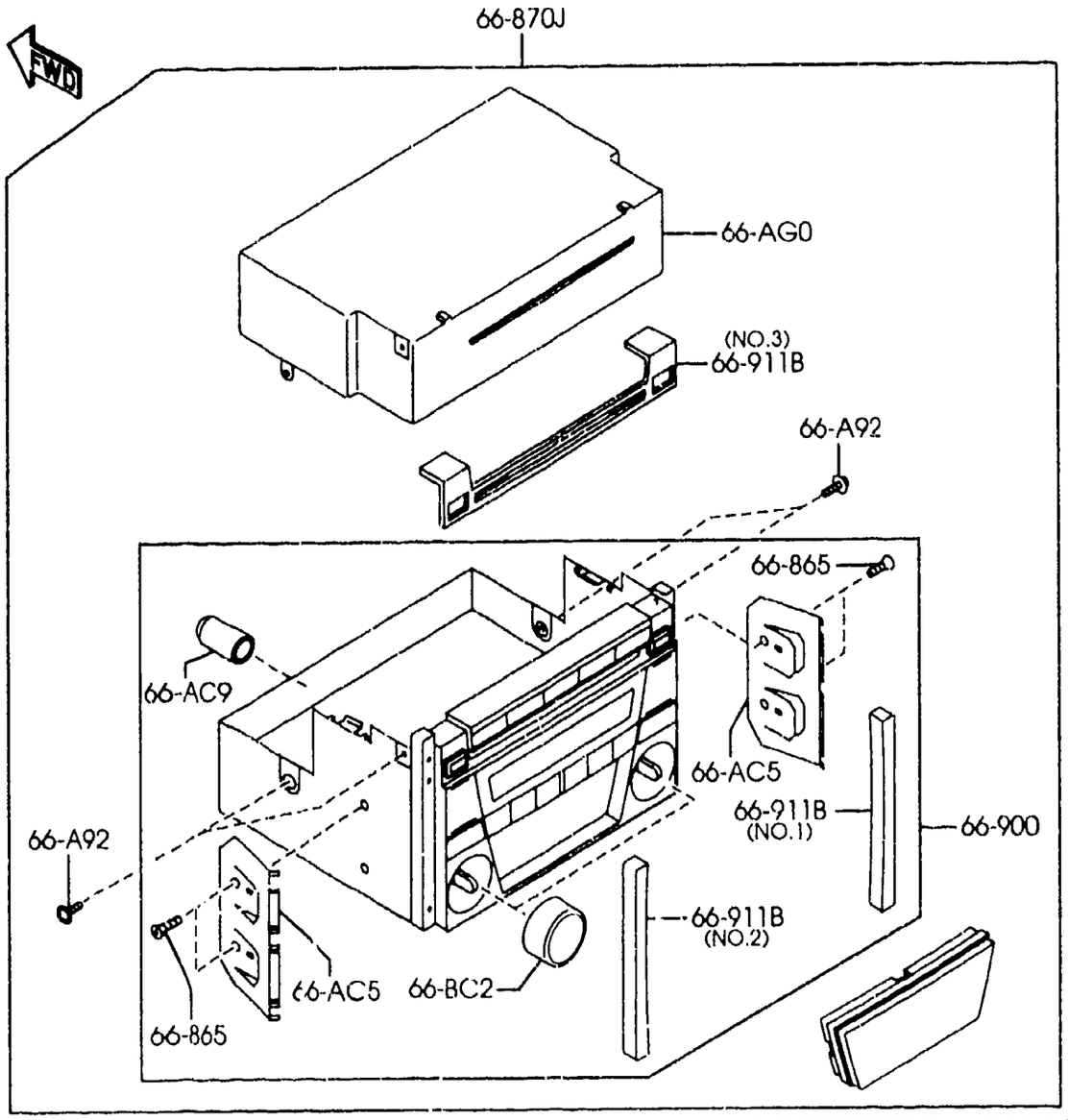

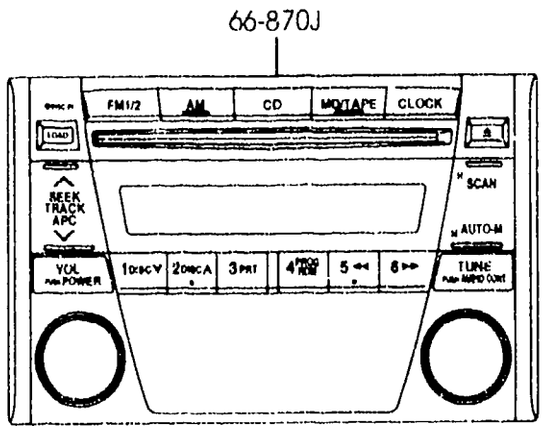

AUNA08 (1N11412)

6680A -4 * AUDIO SYSTEMS (RADIO & TAPE DECK)

PART NO.	QTY	MODEL/RESTRICTION	MODEL/RESTRICTION	MODEL/RESTRICTION	FROM·TO
+---------+					
| 66-920B |		AMP,POWER-AUDIO	AMPLITUDE,AUDIO FORCE		
+---------+					
NC10-66-92ZB	1	((HARD SUSP)>(W/A. LOCK BRAKE)) (SPORT SUSP)	((SUSP.FERM)>(SYST ANTIBLOC)) (SUSP. SPORTIVE)		
+---------+					
| 66-992A |		COVER,HOLE	BOUCHON		
+---------+					
B30E-66-BR4	1	(NOR. SUSP) ((HARD SUSP)>(W/O A. LOCK BRAKE))	(SUSP.NRML) ((SUSP.FERM)>(S/SYST ANTIBLOC))		-1601

1601 NB35**-219011

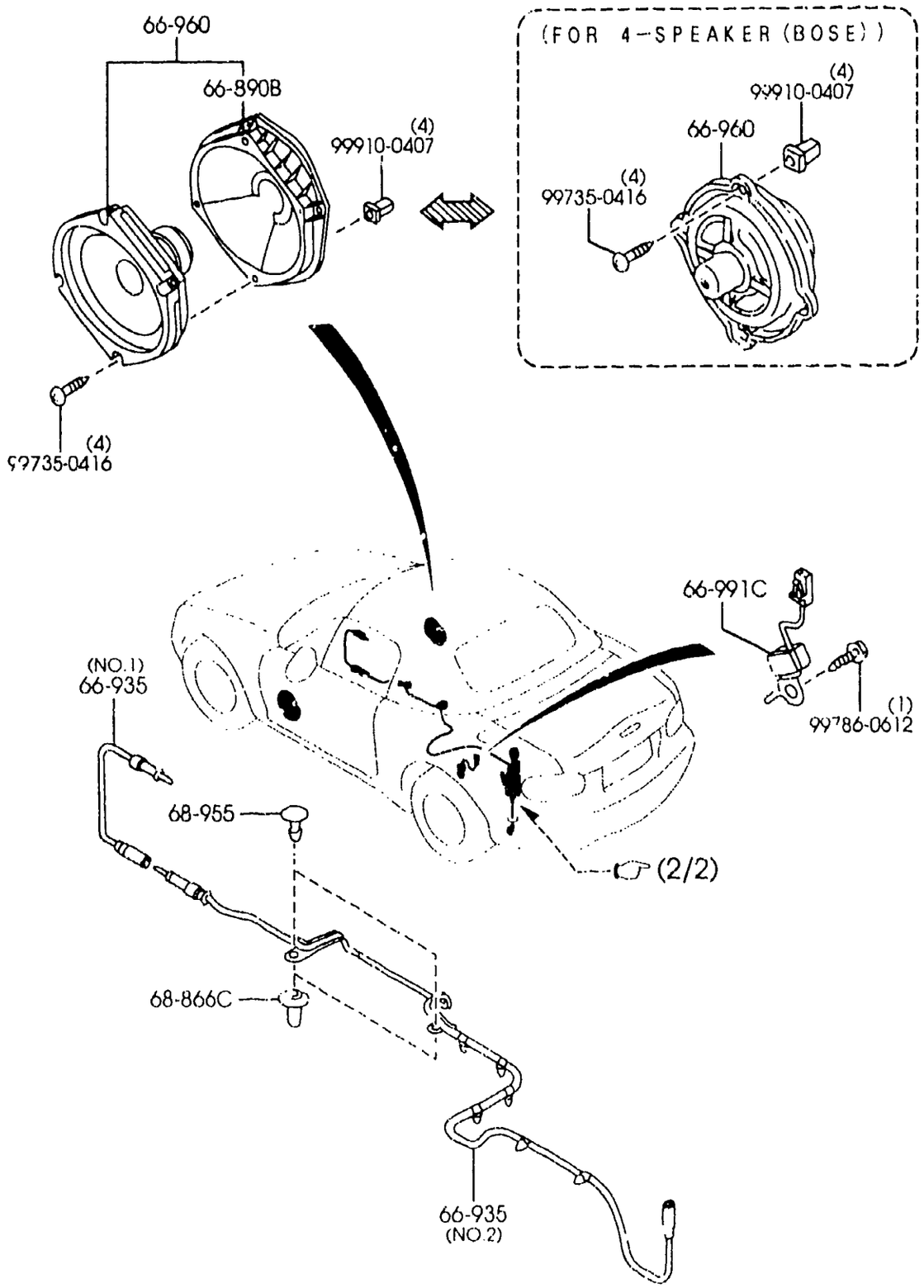
66-960
66-890B
(4)
99910-0407
(4)
99735-0416
(FOR 4-SPEAKER (BOSE))
(4)
99910-0407
66-960
(4)
99735-0416
66-991C
(1)
99786-0612
(NO.1)
66-935
68-955
(2/2)
68-866C
66-935
(NO.2)

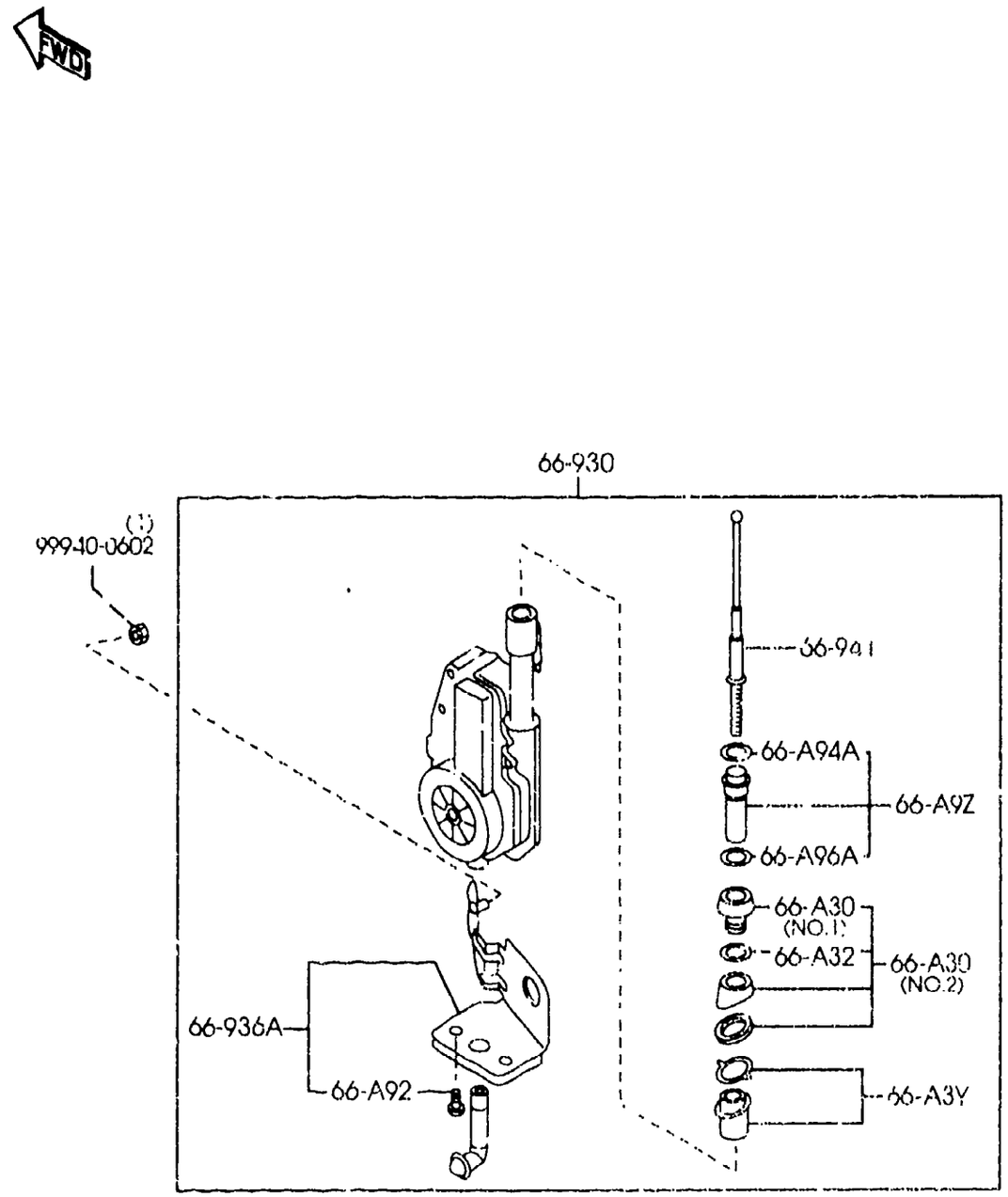
FWD
66-930
(1)
99940-0602
66-941
66-A94A
66-A9Z
66-A96A
66-A30
(NO.1)
66-A32
66-A30
(NO.2)
66-936A
66-A92
66-A3Y

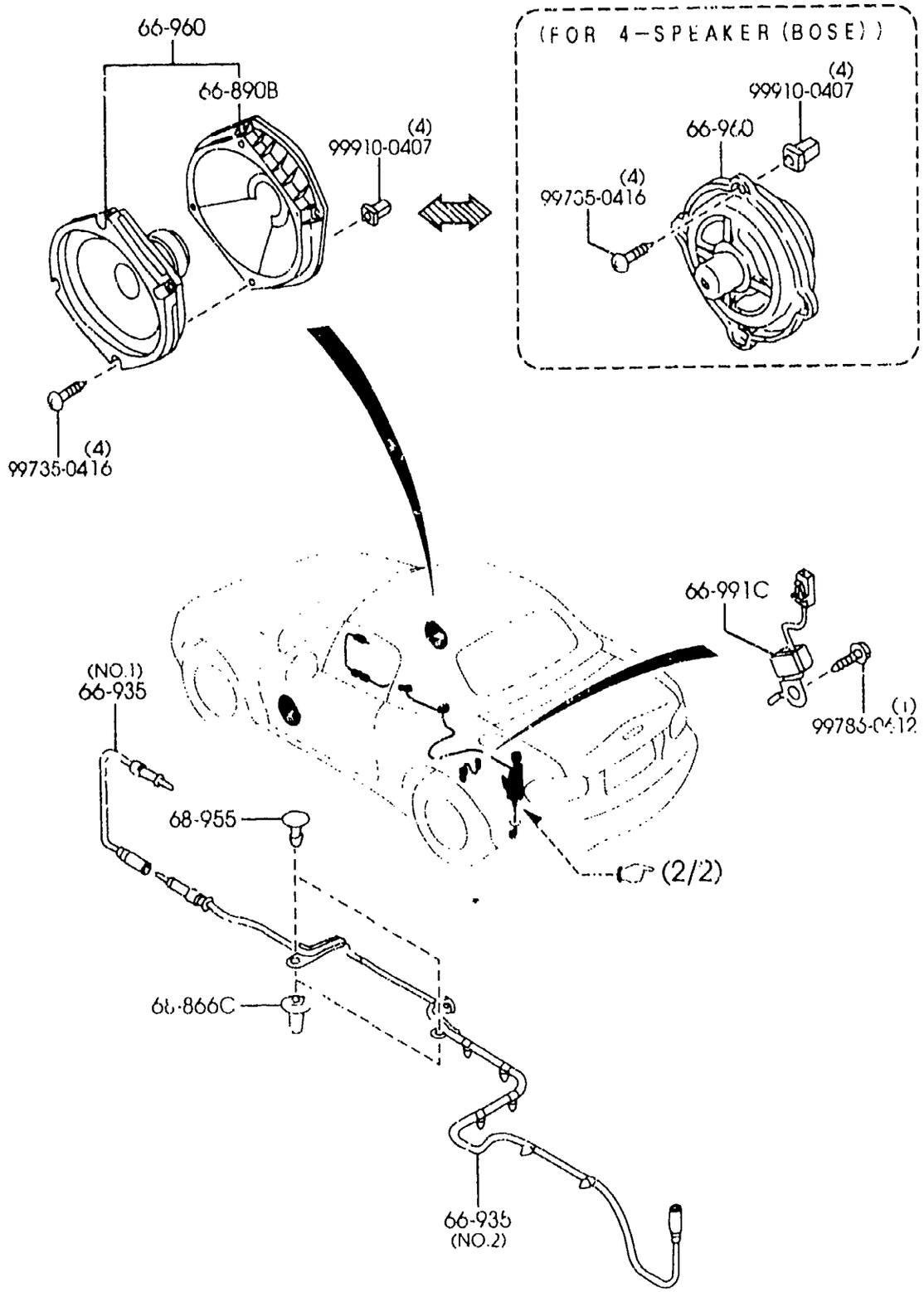

PART NO.	QTY	MODEL/RESTRICTION	MODEL/RESTRICTION	MODEL/RESTRICTION	FROM-TO
66-A3Y NC10-66-A3Z	1	PLATE.EARTH-MOTOR ANTENNA	PLAQUE,MISE TERRE-MOT. A.		
66-A30 M001-66-A31	1	NUT,MOUNTING-ANTENNA (ILLUST. NO.1)	ECROU,MONTAGE-ANTENNE		
NC10-66-A9Y	1	(ILLUST. NO.2)			
66-A32 FB01-66-A32	1	RING,'O'-MOUNTING ANTENNA	JOINT TORIQUE,MONT.-ANTEN		
66-A9Z HG30-66-A9Z	1	INSULATOR,ROD-ANTENNA	ISOLANT,TIGE-ANTENNE		
66-A92 HG30-66-A92	2	SCREW,ANTENNA	VIS,ANTENNE		
66-A94 HE02-66-A94	1	RING,'O'-ANTENNA	JOINT TORIQUE-ANTENNE		
66-A96A HE02-66-A96	1	RING,'O'-ANTENNA	JOINT TORIQUE-ANTENNE		
66-B9[illegible]B NC25-66-9B1A	2	BRACKET (FOR 2-SPEAKER) (FOR 4-SPEAKER(STD.))	SUPPORT		
66-930 NC10-66-930B	1	ANTENNA,RADIO	ANTENNE		
66-935 NC22-66-940E	1	FEEDER-ANTENNA (ILLUST. NO.2)	CONDUCTEUR ALIM.,ANTENNE		
N066-66-940A	1	(ILLUST. NO.1) (FOR 2-SPEAKER) (FOR 4-SPEAKER(STD.))			
NC11-66-940A	1	(ILLUST. NO.1) (FOR 4-SPEAKER(BOSE))			-1701
NC11-66-940B	1	(ILLUST. NO.1) (FOR 4-SPEAKER(BOSE))			1701-

1701 NB35**-219555

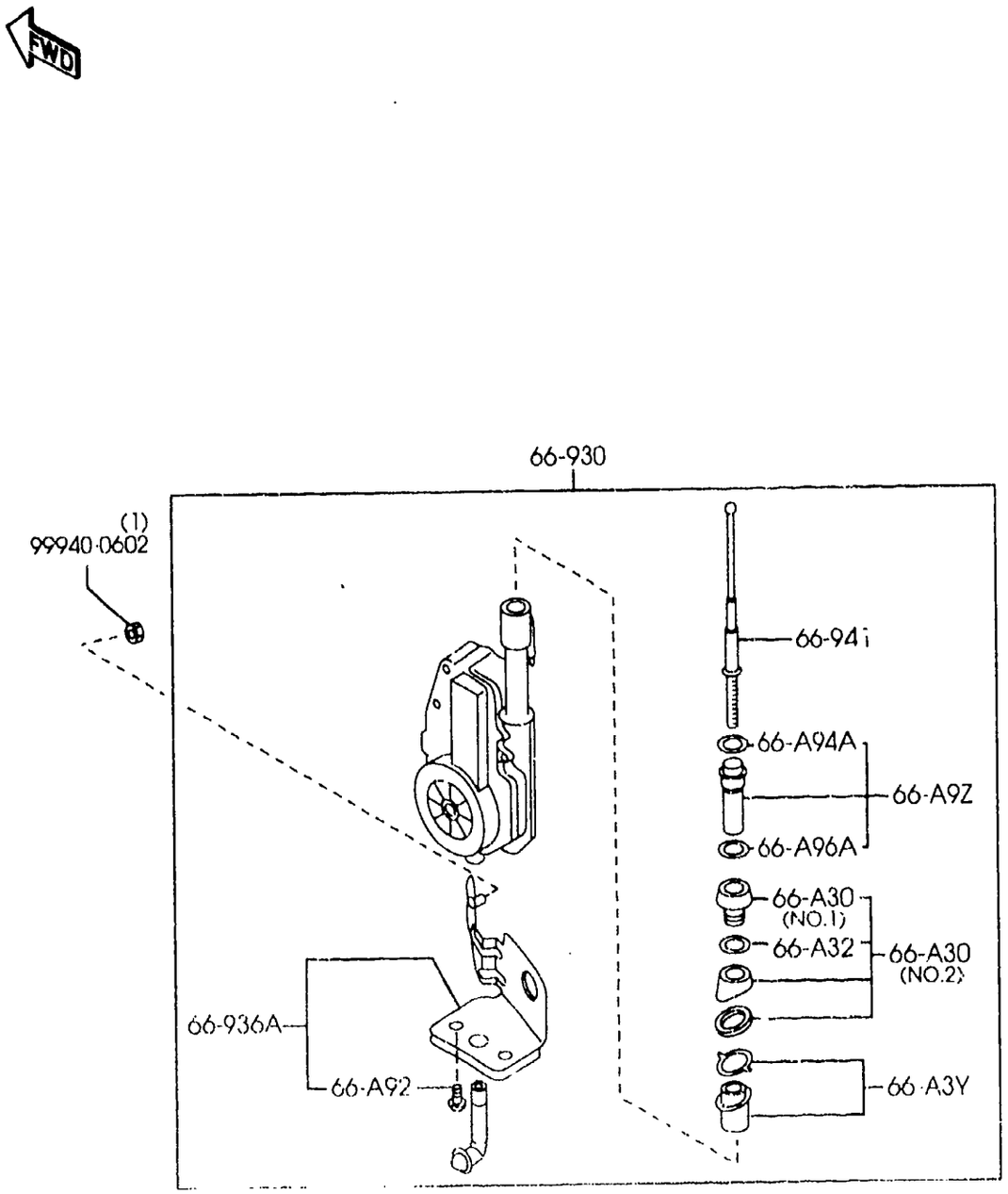

PART NO.	QTY	MODEL/RESTRICTION	MODEL/RESTRICTION	MODEL/RESTRICTION	FROM-TO
66-936A		BRKT,MOTOR-ANTENNA	SUPPORT		
NC10-66-A9XA	1				
66-941		POLE,ANTENNA	POTEAU,ANTENNE		
B05A-66-A30	1				
66-960		SPEAKER,LOUD-FRONT	HAUT PARLEUR		
NC18-66-960C	2	(FOR 4-SPEAKER(BOSE))			
NC25-66-960A	2	(FOR 2-SPEAKER) (FOR 4-SPEAKER(STD.))			
66-991C		CONDENSER	CONDENSATEUR		
NC10-66-991A	1				
68-866C		FASTENER,SEAL	AGRAFE,JOINT D'ETANCHEITE		
B235-68-865B	2				
68-955		FASTENER,LIFT GATE TRIM	FERMETURE,ASS. PORTE LEVE		
GJ37-68-955	2				
00	INT-	NB3 NB4 NB5 NB8 NB9 BLACK	NB3 NB4 NB5 NB8 NB9 NOIR		

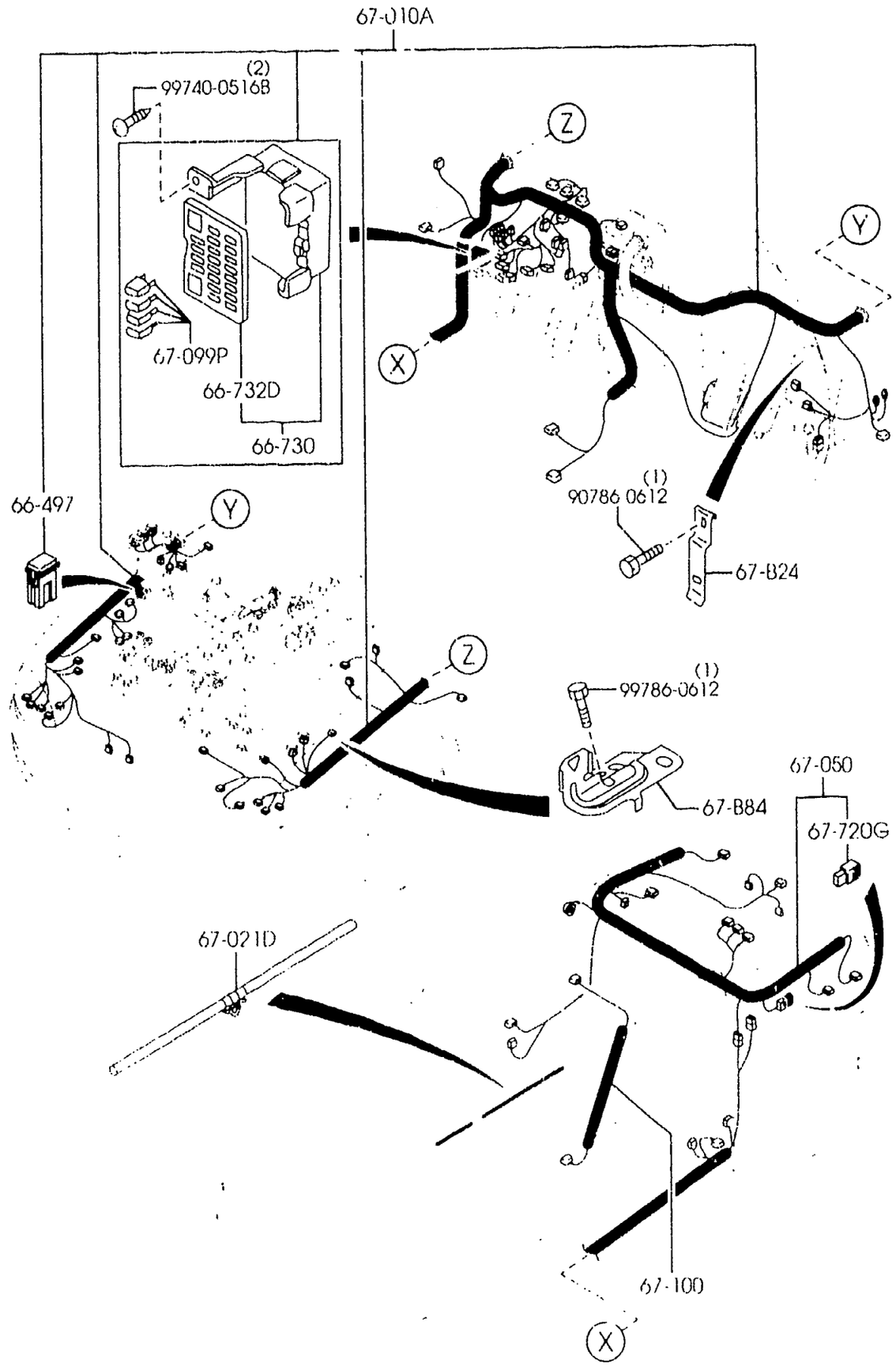

PART NO.	QTY	MODEL/RESTRICTION	MODEL/RESTRICTION	MODEL/RESTRICTION	FROM-TO
+---------+ | 66-497 | +---------+ C100-67-S99	1	FUSE (20A)	FUSIBLE(20A)		
+---------+ | 66-730 | +---------+ NC72-66-730A	1	BLOCK,FUSE	BOITE A,FUSIBLE		
+---------+ | 66-732D | +---------+ NC72-66-731A	1	COVER,FUSE BLOCK	CACHE		
+---------+ | 67-B24 | +---------+ NA75-67-B11A	1	BRACKET	ATTACHE		
+ --------+ | 67-B84 | +---------+ NC10-67-B12	1	BRACKET	ATTACHE		
+---------+ | 67-010A | +---------+ NC72-67-010B A (NC72-67-010C)	1	HARNESS,FRONT (W/O RUNNING LAMP+FO R 2-SPEAKER) (W/O RUNNING LAMP+FO R 4-SPEAKER) ((MT)>(W/O A. LOCK B RAKE))	FAISCEAU AV ((B.V.MANU)>(S/SYST ANTIBLOC))		-1701
NC73-67-010B A (NC73-67-010C)	1	(W/O RUNNING LAMP+FO R 4-SPEAKER(BOSE)) ((MT)>(W/O A. LOCK B RAKE))	((B.V.MANU)>(S/SYST ANTIBLOC))		-1701
NC75-67-010B A (NC75-67-010C)	1	(W/RUNNING LAMP) ((MT)>(W/O A. LOCK B RAKE))	((B.V.MANU)>(S/SYST ANTIBLOC))		-1701
NC76-67-010B A (NC76-67-010C)	1	(W/O RUNNING LAMP) ((AT)>(W/O A. LOCK B RAKE))	((B.V.AUTOM)>(S/SYST ANTIBLOC))		-1701
NC78-67-010C A (NC78-67-010D)	1	(W/O RUNNING LAMP) ((MT)>(W/A. LOCK BRA KE))	((B.V.MANU)>(SYST AN TIBLOC))		-1701
NC80-67-010C A (NC80-67-010D)	1	(W/O RUNNING LAMP) ((AT)>(W/A. LOCK BRA KE))	((B.V.AUTOM)>(SYST A NTIBLOC))		-1701
ND02-67-010B A (ND02-67-010C)	1	(W/RUNNING LAMP) ((AT)>(W/O A. LOCK B RAKE))	((B.V.AUTOM)>(S/SYST ANTIBLOC))		-1701
ND04-67-010C A (ND04-67-010D)	1	(W/RUNNING LAMP) ((MT)>(W/A. LOCK BRA KE))	((B.V.MANU)>(SYST AN TIBLOC))		-1701
ND06-67-010C A (ND06-67-010D)	1	(W/RUNNING LAMP) ((AT)>(W/A. LOCK BRA KE))	((B.V.AUTOM)>(SYST A NTIBLOC))		-1701
NC72-67-010C	1	(W/O RUNNING LAMP+FO			1701-

1701 NB35**-219555

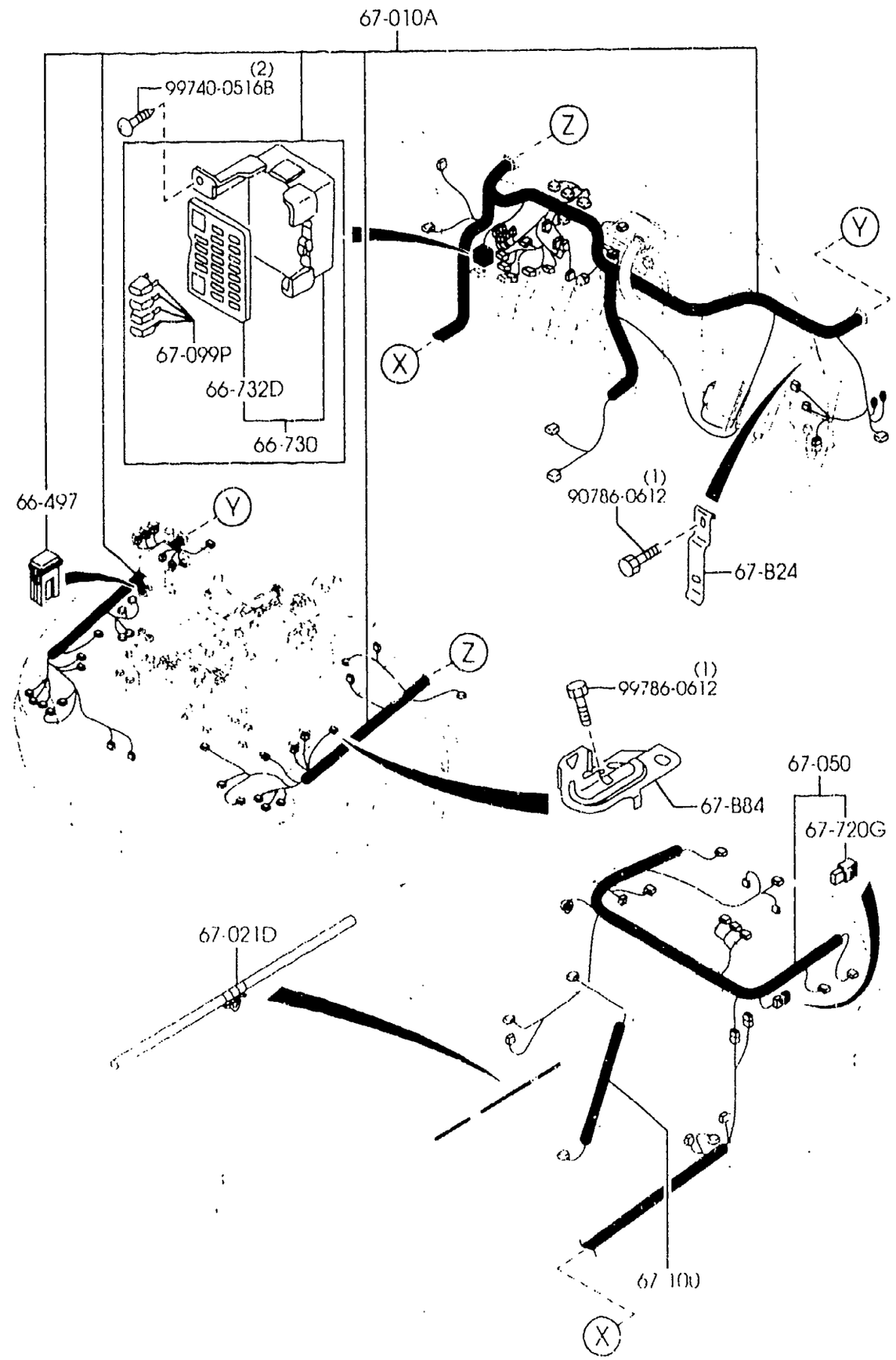

PART NO.	QTY	MODEL/RESTRICTION	MODEL/RESTRICTION	MODEL/RESTRICTION	FROM-TO
CONT'D					
		R 2-SPEAKER) (W/O RUNNING LAMP+FO R 4-SPEAKER) ((MT)>(W/O A. LOCK B RAKE))	((B.V.MANU)>(S/SYST ANTIBLOC))		
NC73-67-010C	1	(W/O RUNNING LAMP+FO R 4-SPEAKER(BOSE)) ((MT)>(W/O A. LOCK B RAKE))	((B.V.MANU)>(S/SYST ANTIBLOC))		1701-
NC75-67-010C	1	(W/RUNNING LAMP) ((MT)>(W/O A. LOCK B RAKE))	((B.V.MANU)>(S/SYST ANTIBLOC))		1701-
NC76-67-010C	1	(W/O RUNNING LAMP) ((AT)>(W/O A. LOCK B RAKE))	((B.V.AUTOM)>(S/SYST ANTIBLOC))		1701-
NC78-67-010D	1	(W/O RUNNING LAMP) ((MT)>(W/A. LOCK BRA KE))	((B.V.MANU)>(SYST AN TIBLOC))		1701-
NC80-67-010D	1	(W/O RUNNING LAMP) ((AT)>(W/A. LOCK BRA KE))	((B.V.AUTOM)>(SYST A NTIBLOC))		1701-
ND02-67-010C	1	(W/RUNNING LAMP) ((AT)>(W/O A. LOCK B RAKE))	((B.V.AUTOM)>(S/SYST ANTIBLOC))		1701-
ND04-67-010D	1	(W/RUNNING LAMP) (W/A. LOCK BRAKE) ((MT)>(W/A. LOCK BRA KE))	(SYST ANTIBLOC) ((B.V.MANU)>(SYST AN TIBLOC))		1701-
ND06-67-010D	1	(W/RUNNING LAMP) (W/A. LOCK BRAKE) ((AT)>(W/A. LOCK BRA KE))	(SYST ANTIBLOC) ((B.V.AUTOM)>(SYST A NTIBLOC))		1701-
+---------+ | 67-021D | +---------+ NC10-67-011	1	HARNESS,WIRE	FAISCEAU DE FILS		
+---------+ | 67-050 | +---------+		HARNESS,REAR	AISCEAU AR		
NC72-67-050B A (NC72-67-050C)	1	(W/O KEY LESS ENTRY) (W/O A. LOCK BRAKE)	(S/SYST ANTIBLOC)		-1701
NC73-67-050B A (NC73-67-050C)	1	(W/KEY LESS ENTRY) (W/O A. LOCK BRAKE)	(S/SYST ANTIBLOC)		-1701
NC78-67-050B A (NC78-67-050C)	1	(W/O KEY LESS ENTRY) (W/A. LOCK BRAKE)	(SYST ANTIBLOC)		-1701
NC79-67-050B A (NC79-67-050C)	1	(W/KEY LESS ENTRY) (W/A. LOCK BRAKE)	(SYST ANTIBLOC)		-1701
*NC72-67-050C	1	(W/O KEY LESS ENTRY) (W/O A. LOCK BRAKE)	(S/SYST ANTIBLOC)		1701-
*NC73-67-050C	1	(W/KEY LESS ENTRY)			1701-

1701 NB35**-219555

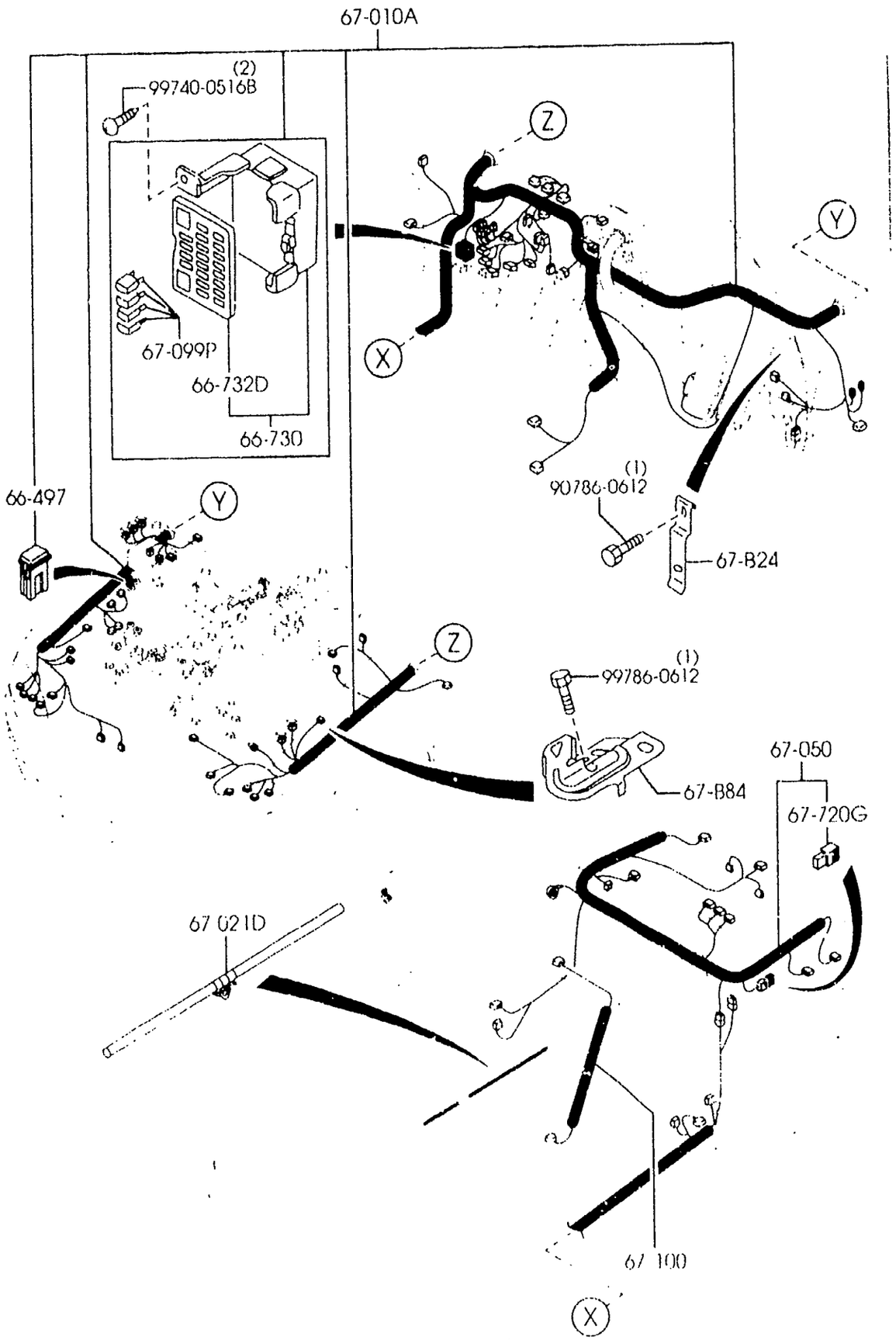

PART NO.	QTY	MODEL/RESTRICTION	MODEL/RESTRICTION	MODEL/RESTRICTION	FROM-TO
CONT'D					
		(W/O A. LOCK BRAKE)	(S/SYST ANTIBLOC)		
*NC78-67-050C	1	(W/O KEY LESS ENTRY)			1701-
		(W/A. LOCK BRAKE)	(SYST ANTIBLOC)		
*NC79-67-050C	1	(W/KEY LESS ENTRY) (W/A. LOCK BRAKE)	(SYST ANTIBLOC)		1701-
+---------+ | 67-099P | +---------+		FUSE	COUPE-CIRCUIT		
99705-1207	3	7.5A	7.5A		
99705-1210	5	10A	10A		
99705-1215	7	15A	15A		
99705-1220	3	20A	20A		
99705-1230	1	30A	30A		
+---------+ | 67-100 | +---------+		HARNESS,ROOM LAMP	FAISCEAU DE PLAFONNIER		
NC10-67-100B	1				
+---------+ | 67-720G | +---------+		RELAY,TRANSFER	RELAIS,FRANSFERT		
*B150-67-720	1				1701-

1701 NB35**-219555

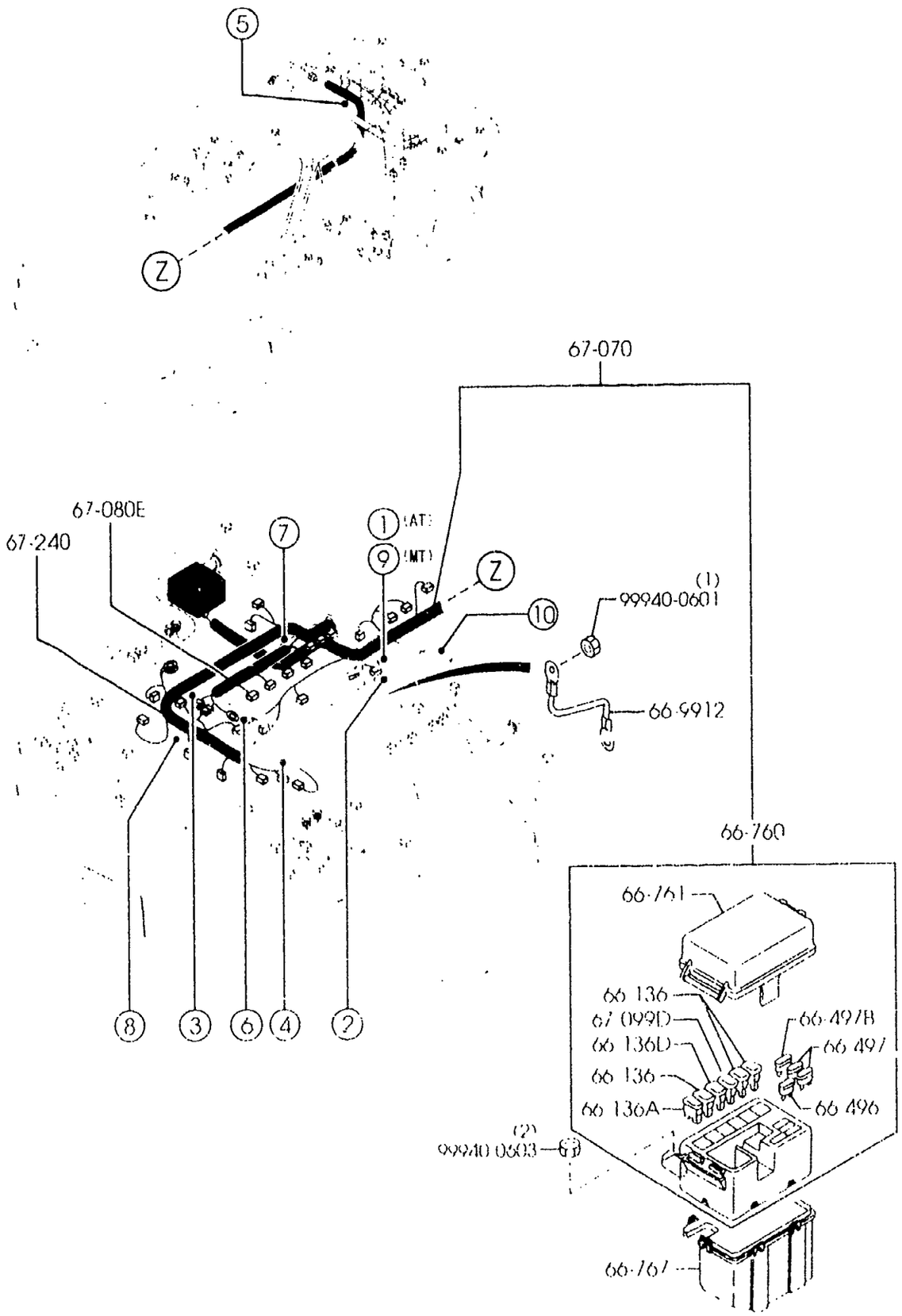
5
Z
67-070
67-080E
67-240
7
1 (AT)
9 (MT)
Z
10
(1)
99940-0601
66-9912
66-760
66-761
66 136
67 099D
66 136D
66 136
66 136A
66-497B
66 497
66 496
(2)
99940 0603
68
66-767
8
3
6
4
2

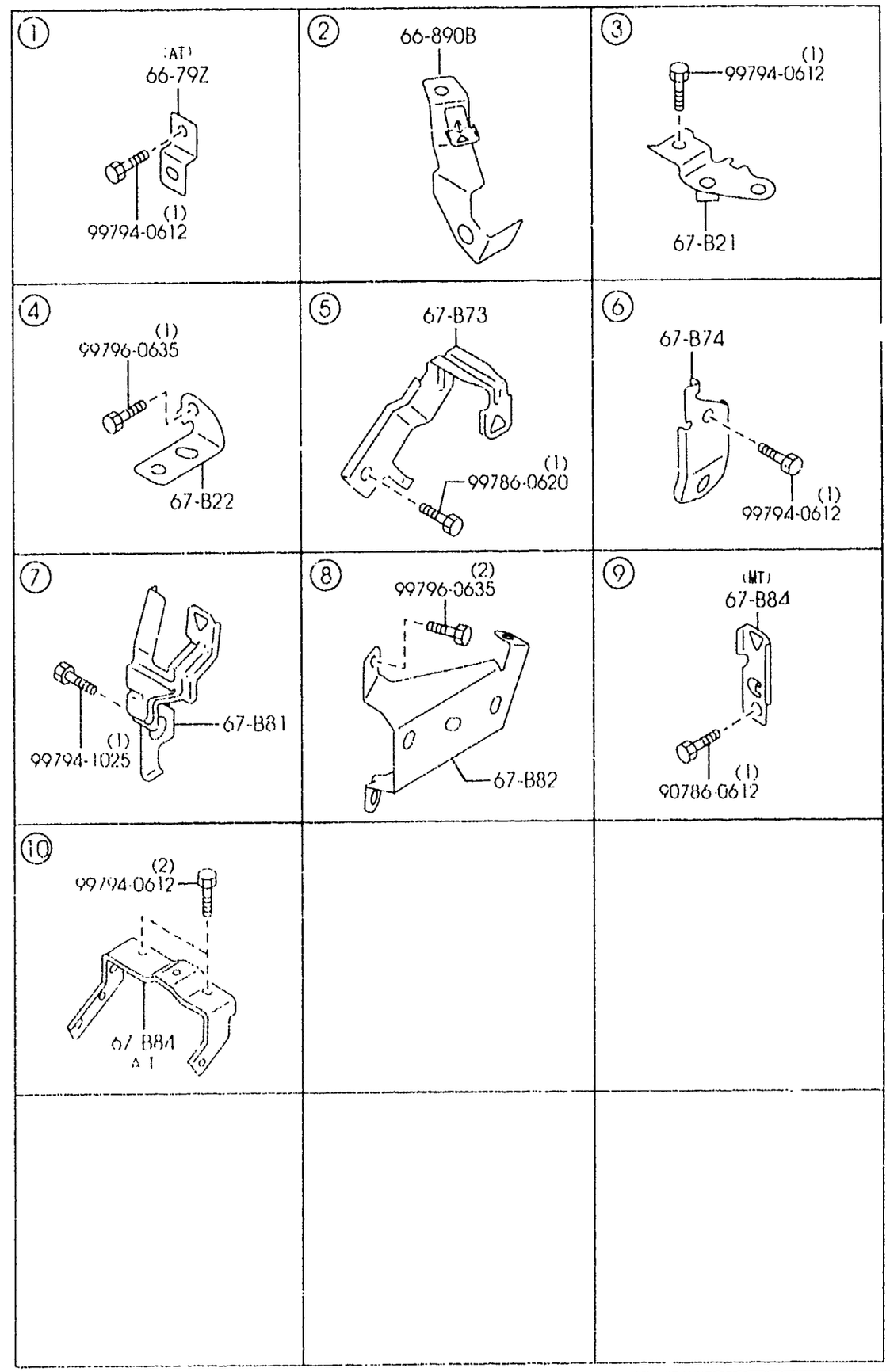
1
(AT)
66-79Z
(1)
99794-0612
2
66-890B
3
(1)
99794-0612
67-B21
4
(1)
99796-0635
67-B22
5
67-B73
(1)
99786-0620
6
67-B74
(1)
99794-0612
7
(1)
99794-1025
67-B81
8
(2)
99796-0635
67-B82
9
(MT)
67-B84
(1)
90786-0612
10
(2)
99794-0612
67 B84
AT

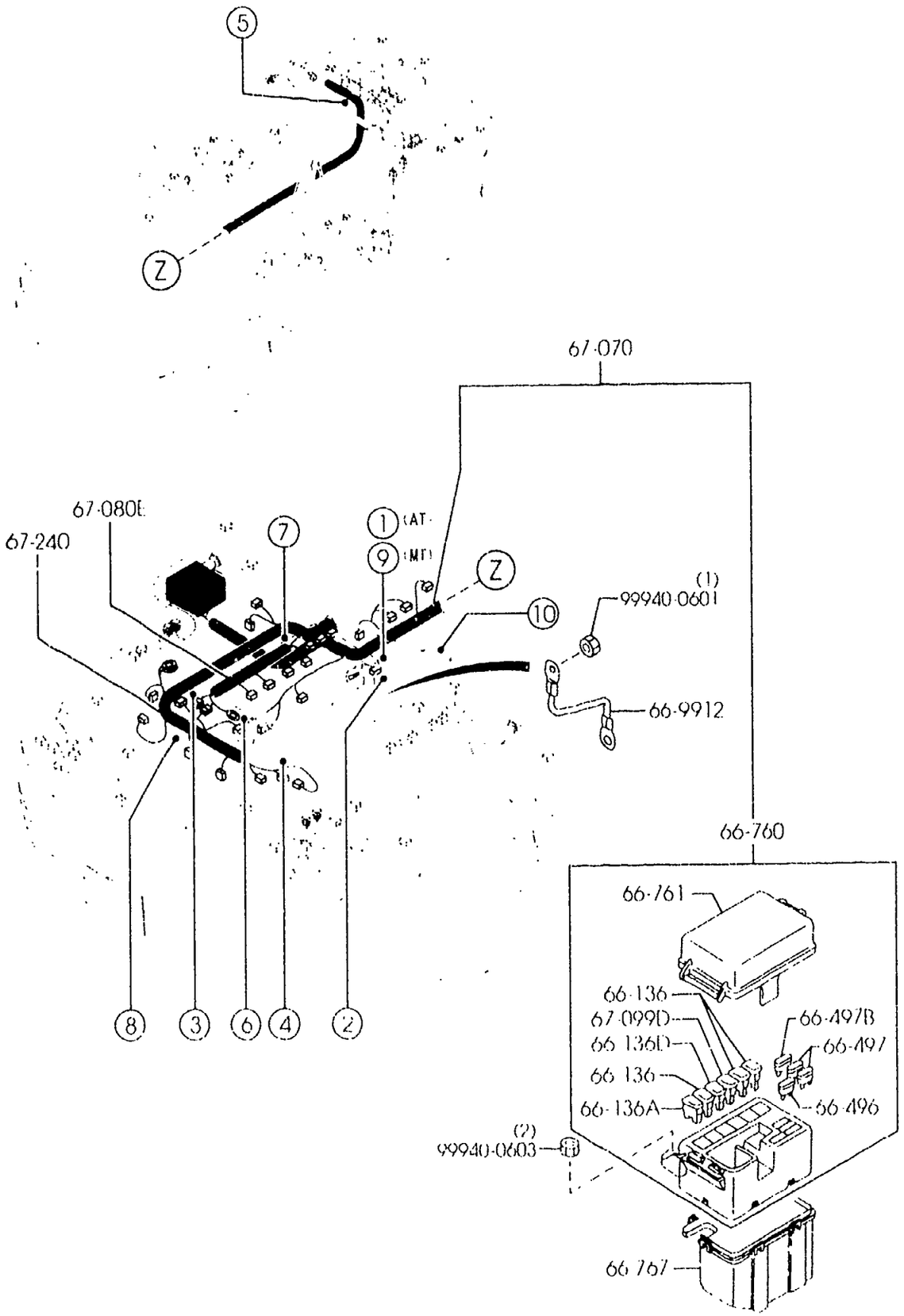

PART NO.	QTY	MODEL/RESTRICTION	MODEL/RESTRICTION	MODEL/RESTRICTION	FROM-TO
66-136		FUSE (30A)	FUSIBLE(30A)		
H115-67-099	3				
66-136A		FUSE (40A)	FUSIBLE(40A)		
H116-67-099	1	40A	40A		
66-136D		FUSE (100A)	FUSIBLE (100A)		
FC01-67-099	1				
66-496		FUSE (15A)	FUSIBLE (15A)		
99705-1115	1				
66-497		FUSE (20A)	FUSIBLE(20A)		
99705-1120	2				
66-497B		FUSE (30A)	FUSIBLE (30A)		
99705-1130	1				
66-760		BLOCK,MAIN FUSE	BOITE ,FUSIBLE PRIN CIPAL		
NC82-66-760A	1				
66-761		COVER,MAIN FUSE BLOC K	COUVERCLE FUSIBLE PR INCIP		
NC82-66-762	1				
66-767		COVER,UNDER-MAIN FUS E BLK	COUVERCLE,SOUS-BL.FU .		
NC10-66-767	1				
66-79Z		BRACKET,HORN	SUPPORT,AVERTISSEUR		
BC5D-66-7B1	1	(AT)	(B.V.AUTOM)		
66-890B		BRACKET	SUPPORT		
NC10-67-B7X	1				
66-9912		WIRE,EARTH	CABLE DE MASSE		
NA75-67-EW1B	1				
67-B21		BRACKET,HARNESS	SUPPORT,HARNAIS		
NC10-67-B2XB	1				
67-B22		BRACKET,HARNESS	SUPPORT,HARNAIS		

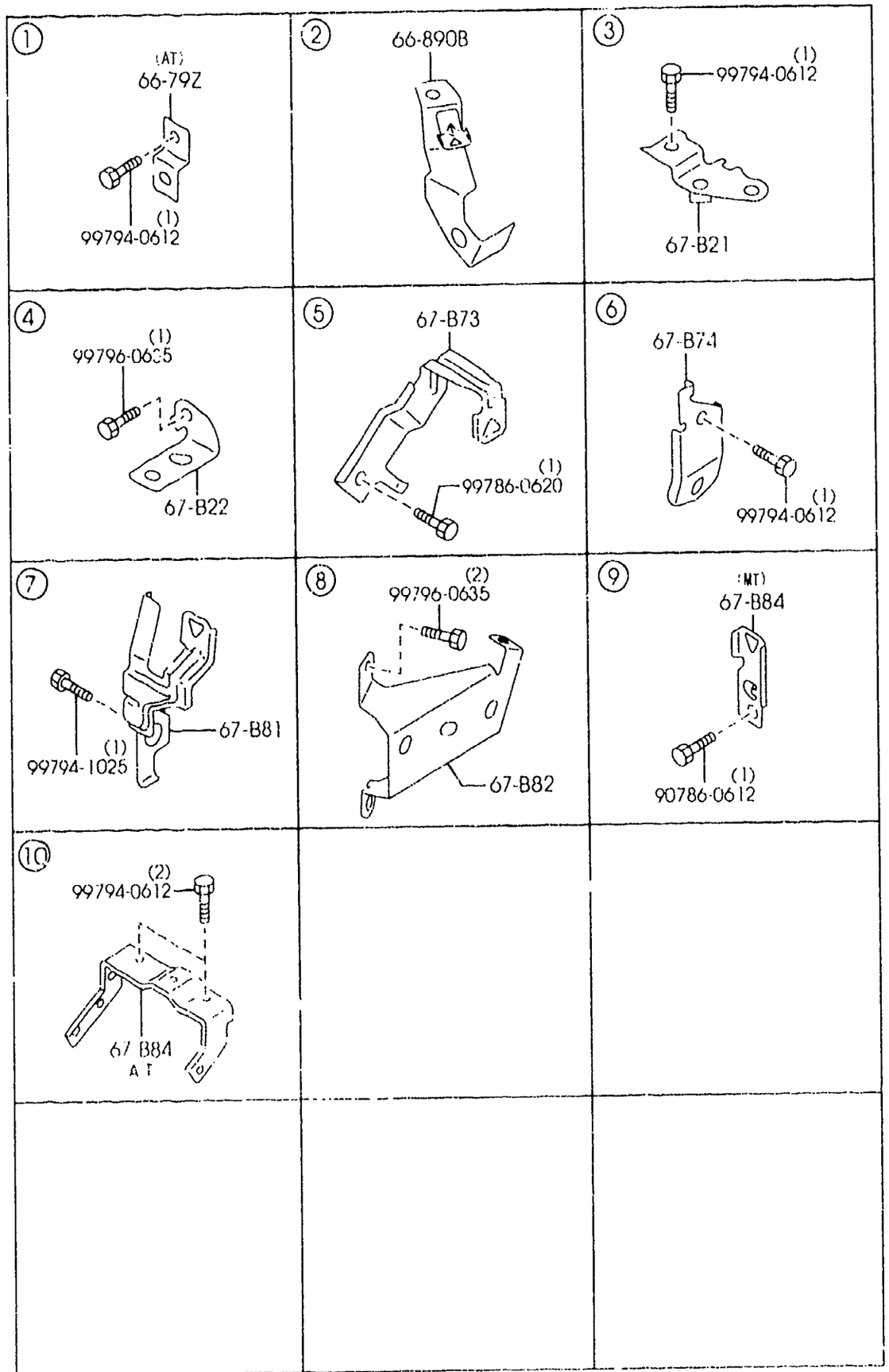

PART NO.	QTY	MODEL/RESTRICTION	MODEL/RESTRICTION	MODEL/RESTRICTION	FROM-TO
CONT'D					
NC10-67-B22	1				
+---------+					
| 67-B73 |		BRACKET,HARNESS	SUPPORT,HARNAIS		
+---------+					
NC10-67-B73	1				
+---------+					
| 67-B74 |		BRACKET,HARNESS	SUPPORT,HARNAIS		
+---------+					
NC10-67-B74	1				
+---------+					
| 67-B81 |		BRACKET,HARNESS-ENGINE	SUPPORT,HARNAIS		
+---------+					
NC10-67-B81B	1				
+---------+					
| 67-B82 |		BRKT,THROTTLE SENSOR	SUPPORT,CAPTEUR REGUAT.		
+---------+					
N066-67-B82	1				
+---------+					
| 67-B84 |		BRACKET	ATTACHE		
+---------+					
NC10-67-B72	1	(MT)	(B.V.MANU)		
NC13-67-B72A	1	(AT)	(B.V.AUTOM)		
+---------+					
| 67-070 |		HARNESS,ENGINE	FAISCEAU,MOTEUR		
+---------+					
NC49-67-070C	1	(MT)	(B.V.MANU)		
NC53-67-070C	1	(AT)	(B.V.AUTOM)		
+---------+					
| 67-080E |		WIRING,INJECTOR	CABLAGE,INJECTION		
+---------+					
N066-67-080C	1				
+---------+					
| 67-099D |		FUSE (60A)	FUSIBLE(60A)		
+---------+					
FB01-67-099	1	60A	60A		
+---------+					
| 67-2[illegible] |		HARNESS,EMISSION	FAISCEAU DE TRANSMISSION		
+---------+					
NC72-67-0[illegible]	1				

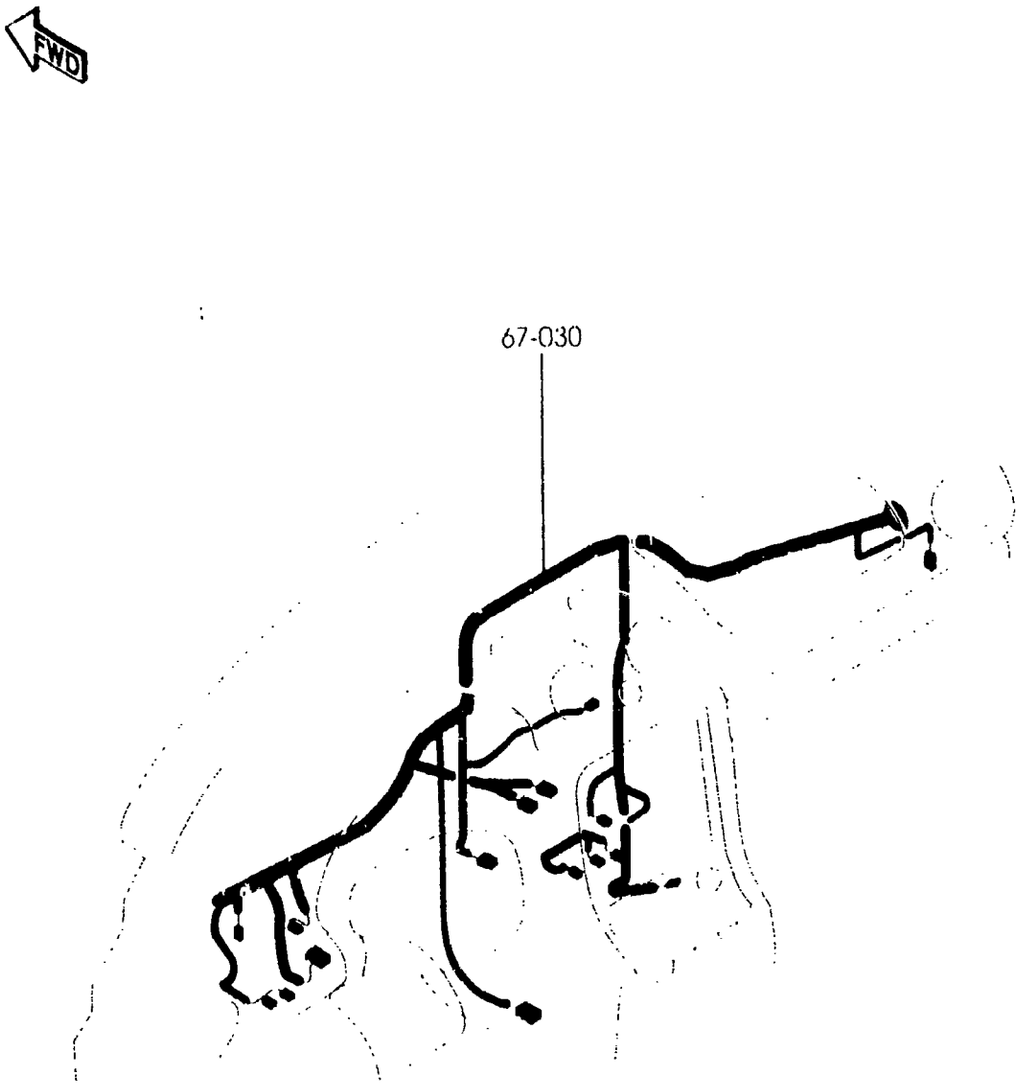

PART NO.	QTY	MODEL/RESTRICTION	MODEL/RESTRICTION	MODEL/RESTRICTION	FROM-TO
+---------+ | 67-030 | +---------+		HARNESS,INSTRUMENT	FAISCEAU DE TABLEAU DE BO		
NC72-67-030B A (NC72-67-030D)	1	(W/O KEY LESS ENTRY+ W/O AUTO CRUISE CONT .)			-1701
NC73-67-030B A (NC73-67-030D)	1	(W/KEY LESS ENTRY+W/ O AUTO CRUISE CONT.)			-1701
NC81-67-030B A (NC81-67-030D)	1	(W/KEY LESS ENTRY+W/ AUTO CRUISE CONT.) (NOR. SUSP) ((HARD SUSP)>(W/O A. LOCK BRAKE))	(SUSP.NRML) ((SUSP.FERM)>(S/SYST ANTIBLOC))		-1701
ND01-67-030B	1	(W/KEY LESS ENTRY+W/ AUTO CRUISE CONT.) (SPORT SUSP) ((HARD SUSP)>(W/A. L OCK BRAKE))	(SUSP. SPORTIVE) ((SUSP.FERM)>(SYST A NTIBLOC))		-1701
*NC72-67-030D	1	(W/O KEY LESS ENTRY+ W/O AUTO CRUISE CONT .)			1701-
*NC73-67-030D	1	(W/KEY LESS ENTRY+W/ O AUTO CRUISE CONT.)			1701-
*NC81-67-030D	1	(W/KEY LESS ENTRY+W/ AUTO CRUISE CONT.) ((HARD SUSP)>(W/O A. LOCK BRAKE)) (NOR. SUSP)	((SUSP.FERM)>(S/SYST ANTIBLOC)) (SUSP.NRML)		1701-
*ND01-67-030D	1	(W/KEY LESS ENTRY+W/ AUTO CRUISE CONT.) ((HARD SUSP)>(W/A. L OCK BRAKE)) (SPORT SUSP)	((SUSP.FERM)>(SYST A NTIBLOC)) (SUSP. SPORTIVE)		1/01-

1701 NB35**-219555

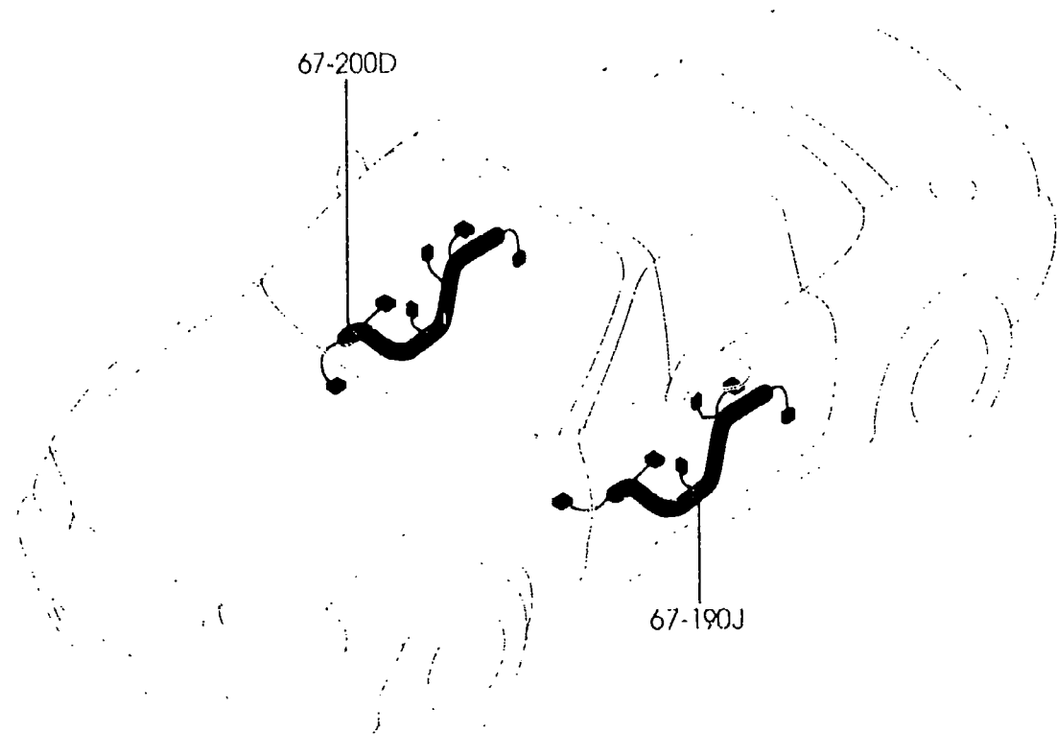

PART NO.	QTY	MODEL/RESTRICTION	MODEL/RESTRICTION	MODEL/RESTRICTION	FROM-TO
+---------+ | 67-190J | +---------+		HARNESS,DOOR-DRIVER SIDE	C .ULAGE,HARNAIS-C. C OND.		
NC72-67-190C	1	(FOR 2-SPEAKER+W/POW ER DOOR LOCK)			
NC73-67-190C	1	(FOR 4-SPEAKER+W/POW ER DOOR LOCK) (FOR 4-SPEAKER(BOSE) +W/POWER DOOR LOCK)			
NC74-67-190C	1	(FOR 2-SPEAKER+W/O P OWER DOOR LOCK) (AT)	(B.V.AUTOM)		
NC75-67-190C	1	(FOR 4-SPEAKER+W/O P OWER DOOR LOCK) (FOR 4-SPEAKER(BOSE) +W/O POWER DOOR LOCK) (AT)	(B.V.AUTOM)		
N066-67-190C	1	(FOR 2-SPEAKER+W/O P OWER DOOR LOCK) (MT)	(B.V.MANU)		
N067-67-190C	1	(FOR 4-SPEAKER+W/O P OWER DOOR LOCK) (FOR 4-SPEAKER(BOSE) +W/O POWER DOOR LOCK) (MT)	(B.V.MANU)		
+---------+ | 67-200D | +---------+		HARNESS,DOOR-PASSENG ER SIDE	CABLAGE,HARNAIS-C. V O'AG.		
NC74-67-190C	1	(FOR 2-SPEAKER+W/O P OWER DOOR LOCK) (AT)	(B.V.AUTOM)		
NC74-67-190C	1	(FOR 2-SPEAKER+W/POW ER DOOR LOCK)			
NC75-67-190C	1	(FOR 4-SPEAKER+W/O P OWER DOOR LOCK) (FOR 4-SPEAKER(BOSE) +W/O POWER DOOR LOCK) (AT)	(B.V.AUTOM)		
NC75-67-190C	1	(FOR 4-SPEAKER+W/POW ER DOOR LOCK) (FOR 4-SPEAKER(BOSE) +W/POWER DOOR LOCK)			
N066-67-190C	1	(FOR 2-SPEAKER+W/O P OWER DOOR LOCK) (MT)	(B.V.MANU)		
N067-67-190C	1	(FOR 4-SPEAKER+W/O P OWER DOOR LOCK) (FOR 4-SPEAKER(BOSE) +W/O POWER DOOR LOCK) (MT)	(B.V.MANU)		

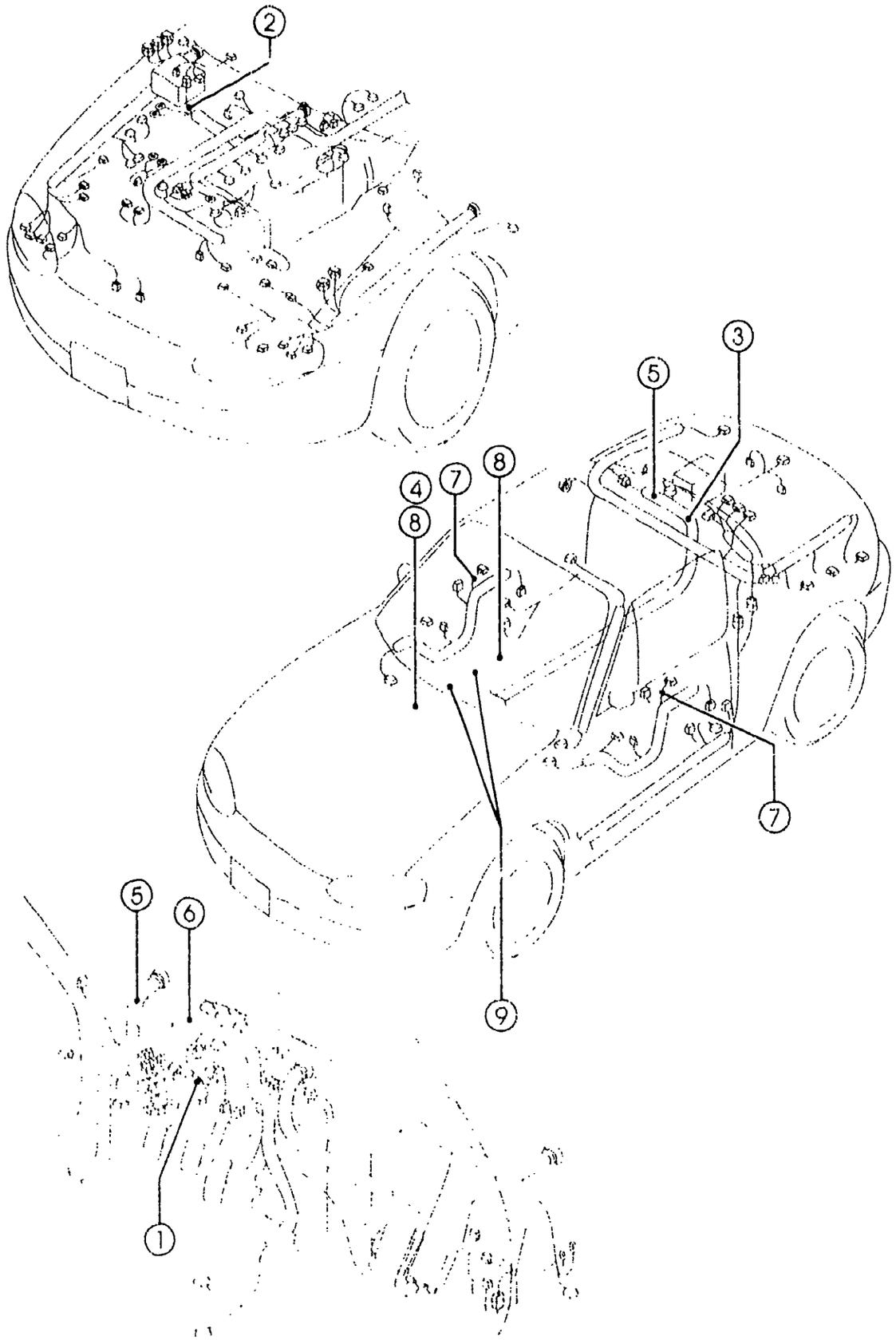

①	②	③		④
61-477C	67-013A	67-014F (1) 90786-0620		67-026
⑤	⑥	⑦	⑧	⑨
67-052H	67-076	68-425A	68-865	(2) 99264-0738

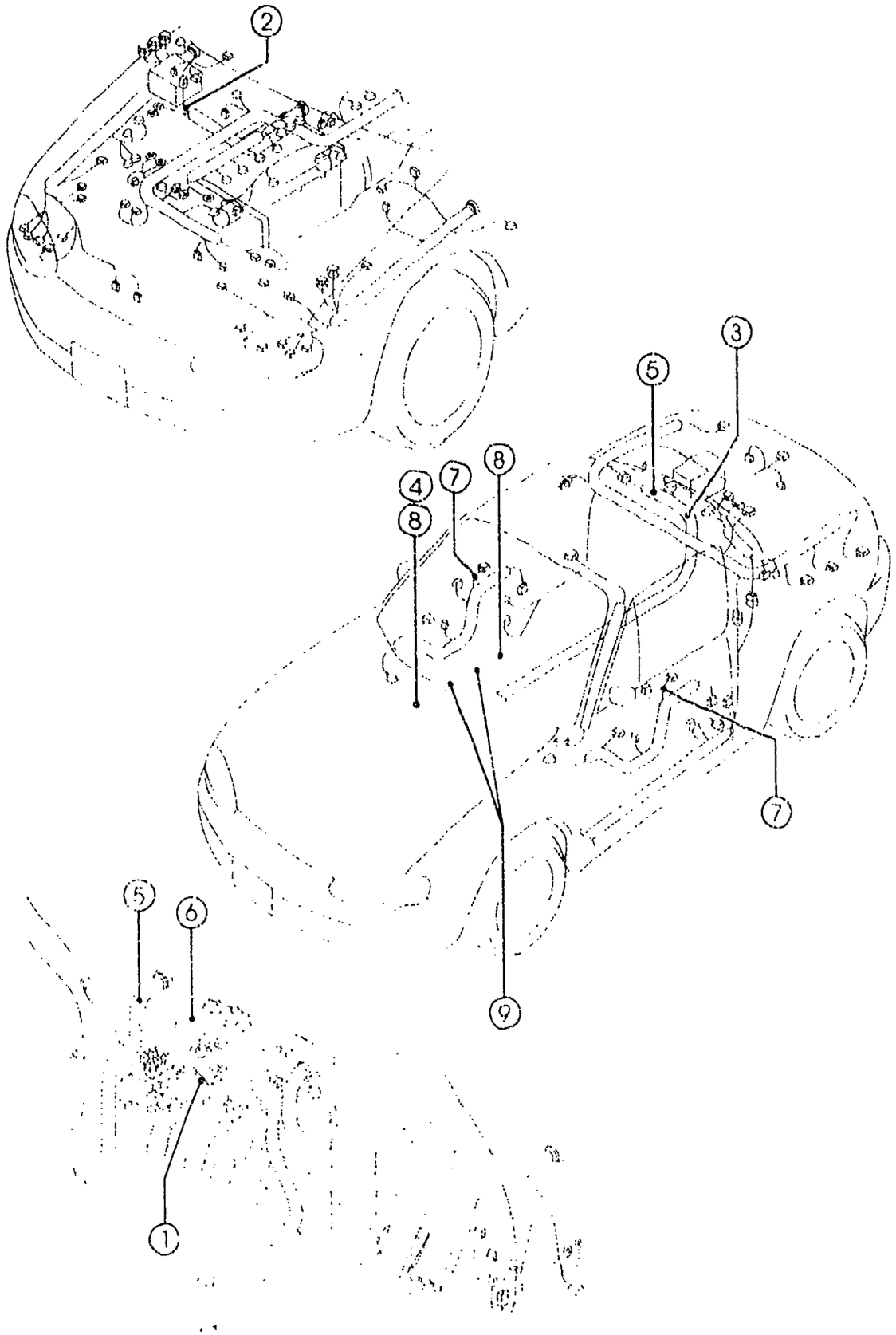

6704A -1 * WIRING HARNESS CLAMPS

PART NO.	QTY	MODEL/RESTRICTION	MODEL/RESTRICTION	MODEL/RESTRICTION	FROM-TO
61-477C B02A-61-477	1	CLIP (W/O POWER DOOR LOCK)	ATTACHE		
67-013A BR70-67-CC6A	1	CLIP	ATTACHE		
67-014F NA01-67-P71	1	PROTECTOR,HARNESS	PROTECTEUR,HARNAIS.		
67-026 NA02-67-CW5A	1	CLIP,HARNESS	COLLIER,HARNAIS		
67-052H G030-67-018A	2	CLIP	ATTACHE		
67-076 NA01-67-CH8	1	CLIP,ENGINE HARNESS	CLIP		
68-425A LA01-57-425A	2	COVER,HOLE (FOR 2-SPEAKER)	COUVERCLE		
68-865 BR70-68-865	2	FASTENER	AGRAFE		